SAFE HARBOR
PUERTO DEL REY

STORMWATER POLLUTION PREVENTION PLAN

PREPARED FOR:

PUERTO DEL REY MARINA
4900 STATE ROAD PR-3 KM. 51.4
BO. DEMAJAGUA, FAJARDO, PR 00738
TEL.: (787) 860-1000

SWPPP CONTACT:

MARINA PDR OPERATIONS, LLC
CAROLINA CORRAL
4900 STATE ROAD PR-3
FAJARDO, PR 00738-7592
TEL.: (787) 860-1000
FAX: (787) 860-7592
E-MAIL: ccorral@shmarinas.com

SWPPP PREPARED BY:

EHA
ENGINEERING, PSC

EHA ENGINEERING, PSC
PO BOX 755, SABANA SECA, PR 00952
TEL.: (787) 379-9800

SWPPP PREPARATION DATE:

MAY 26, 2021

TABLE OF CONTENTS

LIST OF TABLES

LIST OF GRAPHS

ATTACHMENTS

1 Introduction

1.1 Applicability

In accordance with the terms and conditions of the Environmental Protection Agency's (EPA) National Pollutant Discharge Elimination System (NPDES) Multi-Sector General Permit (MSGP) for Stormwater Discharges Associated with Industrial Activity, all procedures, tasks and provisions contained in this plan will be performed by Marina PDR Operations, LLC and its authorized representatives, in those areas where industrial activity is carried out within the Puerto del Rey Marina located in Fajardo and Ceiba, Puerto Rico.

Before submitting the Notice of Intent (NOI) for permit coverage, the Stormwater Pollution Prevention Plan (SWPPP) must be fully developed and implemented. Marina PDR Operations, LLC must keep its SWPPP up to date during the effectiveness of its MSGP coverage, such as making revisions and improvements to its stormwater management program based on new information and experiences with major storm events.

1.2 Scope

This SWPPP is intended to document the selection, design, and installation of stormwater control measures to meet the MSGP's effluent limits. By means of a series of inspections, maintenances, monitoring, and correctives actions, the information is obtained to verify the effectiveness of the SWPPP implementation and compliance with the Stormwater Discharge Permit Regulations (40 CFR 122), enforced by the U.S. Environmental Protection Agency, under the National Pollutant Discharge Elimination System Program.

1.3 Purpose and Objectives

The objective of the Stormwater Pollution Prevention Plan (SWPPP) is to develop strategies to identify potential sources of stormwater pollution generated by industrial activities, describe practices to reduce pollutants in stormwater discharges from the industrial activities by implementing environmental controls, and identify procedures that the Puerto del Rey Marina will implement to comply with the terms and conditions of the Multi-Sector General Permit (MSGP).

These objectives are accomplished by educating a team of qualified personnel who will be responsible for implementing the plan, identifying and providing adequate resources, evaluating potential stormwater pollution sources within those facility areas, selecting and implementing appropriate management practices and controls for each area and periodically evaluating the effectiveness of the plan in order to prevent stormwater contamination.

2 Facility Description and Contact Information

2.1 Facility Information

Puerto del Rey Marina
4900 State Road PR-3 KM 51.4
Fajardo, Puerto Rico 00738

NPDES ID: PRR053171

The Primary Industrial Activity SIC Code, and Sector and Sub-sector (2021 MSGP, Appendix D and Part 8): 4493, Sector Q, Sub-sector Q1

Co-located Industrial Activity SIC Code, Sector and Sub-sector (2021 MSGP, Appendix D and Part 8): 3732, Sector R, Sub Sub-sector R1

Latitude:	Longitude:
18.28517243 °N (decimal degrees)	65.63606031 °W (decimal degrees)

The method used to determine latitude/longitude was: USGS topographic map (Scale 1:20,000) and PR Planning Board Interactive Map. The Horizontal Reference Datum used was NAD 83.

The entire Marina facilities are located within a group of parcels with a total area of approximately 64 acres. Only 30 acres are part of the facilities that operate industrial activities exposed to stormwater. The description of the operation is included in Section 2.4 of the Stormwater Pollution Prevention Plan. **Attachment F** illustrates the areas where industrial operations take place.

The facility does not discharge stormwater into a municipal separate storm sewer system (MS4). The surface water(s) that receive stormwater from Puerto del Rey Marina are the Caribbean Sea, the Demajagua River Estuary, and an Unnamed Creek.

The Demajagua River Estuary has been categorized as impaired waters. This condition imposes special observance for Dissolved Oxygen and Turbidity and a Total Maximum Daily Load (TMDL) of Fecal Coliform since September 2011.

For the Caribbean Sea Coastline, Copper, Thallium, Dissolved Oxygen, Enterococci, Temperature and Turbidity are the pollutants that cause impairments in the water.

2.2 Contact Information

Facility Operators

Name: Marina PDR Operations, LLC / Ms. Carolina Corral
Address: 4900 State Road PR-3 Km. 51.4
City, State, Zip Code: Fajardo, PR 00738
Telephone Number: 787-860-1000
E-mail Address: ccorral@puertodelrey.com
Fax Number: 787-860-7592

Contractors:

Name: Wilco Welding Services / Mr. William Couvertier
Address: #92 F Street, Montemar Dev.
City, State, Zip Code: Fajardo, PR 00738
Telephone Number: 787-860-4471, 787-646-1144
E-mail Address: wilcowilco316@yahoo.com

Name: RS Marine / Mr. Ruben Sueira
Address: PO Box 250
City, State, Zip Code: Ceiba, PR 00735
Telephone Number: 787-391-2168
E-mail Address: arsueiras@yahoo.com

Name: Wally Castro Marine
Address: PO Box 847
City, State, Zip Code: Fajardo, PR 00738
Telephone Number: 787-272-5831, 787-398-6392
E-mail Address: wally@wallycastro.com

Name: Island Marine, Inc. / Mr. Ken Towne
Address: PO Box 259
City, State, Zip Code: Ceiba, PR 00735
Telephone Number: 787-633-3088
E-mail Address: islandmarineinc@gmail.com

Name: One Stop Marine / Osmani Del Pino Gómez
Address: PO Box 261
City, State, Zip Code: Ceiba, PR 00735
Telephone Number: 787-531-7707
E-mail Address: preventivemarine@gmail.com

Name: The Yacht Garage / David R. Kendricks Smith
Address: HC-55 BZN 9402
City, State, Zip Code: Ceiba, PR 00735
Telephone Number: 787-360-7007
E-mail Address: theyachtgarage@aol.com

Name: RIMCO, Inc.
Address: Marina Puerto del Rey
City, State, Zip Code: Fajardo, PR 00738
Telephone Number: 787-885-4618
E-mail Address: pccarriles@rimco-inc.com

Name: Chamo’s Boat Repair / Mr. Freddy G. Rivas
Address: 266-2 Barrio Mariana
City, State, Zip Code: Naguabo, PR 00718
Telephone Number: 787-444-5648
E-mail Address: freddy137@hotmail.com

Facility Owner:

Name: PDR Acquisition, LLC / Ms. Carolina Corral
Address: 4900 State Road PR-3
City, State, Zip Code: Fajardo, PR 00738
Telephone Number: 787-860-1000
E-mail Address: ccorral@puertodelrey.com
Fax Number: 787-860-7592

SWPPP Contact(s):

SWPPP Contact Name (Primary): EHA Engineering, PSC / Edgardo Hernández Alvarado, PE
Telephone Number: 787-379-2582
E-mail Address: eha@ehaeng.com

SWPPP Contact Name (Backup): EHA Engineering, PSC / Omar Burgos Mercado, BSME
Telephone Number: 787-207-0273
E-mail Address: oburgos.eha@gmail.com

2.3 Stormwater Pollution Prevention Team

Table 1: Stormwater Pollution Prevention Team

Staff Names and/or Title	**Individual Responsibilities**
Director of Operations	SWPPP Team Coordinator/Supervisor
EHA Engineering, PSC	SWPPP design, monitoring, inspections, and updates
Director of Security and Safety	SWPPP monitoring and inspections
Security Officer	SWPPP monitoring and inspections
Maintenance Supervisor	SWPPP maintenance/implementation
Boatyard Manager	SWPPP maintenance/implementation
Harbor Master	SWPPP maintenance/implementation

This stormwater pollution prevention team is responsible for assisting the facility manager in developing and revising the facility's SWPPP, implementing and maintaining control measure/BMPs, and taking corrective actions where required.

Each member of the stormwater pollution prevention team has ready access to the MSGP and this SWPPP.

2.4 Site Description

The activities conducted as part of the Marina operations are divided into two (2) major operations: Commercial and Industrial, both of which operate during the entire calendar year. Most of the commercial operation is conducted during daylight hours but extends into the night on some days with the operation of the Customer Service Concierge Building. The industrial operation is typically conducted during daylight hours.

2.4.1 Commercial

The commercial activity is the main operation of the Marina. It includes the day-to-day operation of products and services sales, wet slips and dry stack operations, customer service, parking, concessionaries, food services, apartments rent, bathrooms and self-service laundry.

A. Main Building – Apartment and Commercial Building (This property is subject to a Horizontal Property Regime, which also applies PDR as the Marina operator)

    1. Private residential and short-term apartments for rents in 2nd and 3rd floor
    2. Commercial activities, including Marina Main Administrative Office

B. Concierge Building – Marina customer support services
C. Bathrooms and Self-Service Laundry Building
D. Bathroom Building
E. Restaurant
F. Game Room Building
G. Commercial Building – 15,600 ft^2 of commercial building
H. Driveways
I. Paved Parking Lot – 42,800 m^2 of parking for 631 vehicles
J. Unpaved Parking Lot – 2,350 m^2 of parking for 328 vehicles
K. Open Plazas
L. Kids Playground
M. Green Areas
N. Dry Stack customer waiting area – 385 ft^2 of a covered waiting area.
O. Charter Building – 1000 ft^2 of charter building
P. Boat Dealers – 2,615 m^2 of boat dealer area
Q. Covered Car Wash – 750 ft^2 of car wash area

The commercial activities are not subject to MSGP coverage.

2.4.2 Industrial

The industrial operation is divided into two (2) major components, the Puerto Del Rey Marina Operations and the Independent Contractor's Operations.

A. Puerto Del Rey Marina – Facilities and Equipment maintenance and Customer Service, which includes boat-hauling:
    1. Has control over the operation and maintenance of the heavy equipment that operates in the Marina.
        a. Maintenance Facilities in two separate areas within the Boatyard area and one covered building located in the Varadero area.
            - Equipment Storage and Maintenance
                - Thirteen (13) carts for client transportation
                - Twenty-eight (28) carts for facilities maintenance and administration
                - One (1) Digger
                - Three (3) Trucks
                - One (1) Water Truck for dust control
                - Heavy equipment for boat hauling
                    - ✓ Four (4) Travel lift
                    - ✓ One (1) Travel lift (TM40)
                    - ✓ Six (6) Forklift
                    - ✓ One (1) Trailer (Brownell)

            - Two (3) tractors

- Two (2) Boats
- One (1) SUV
- One (1) Forklift
- One (1) Sky Track
- One (1) Boom Lift

b. Tool and Fluid Storage
   - Solvents
   - Paint
   - Lubricants (Oils and Greases)
   - Fuels

c. Materials Storage
   - Jack Stands
   - Wooden Supports
   - Spare parts (Electrical, Mechanical, Plumbing)
   - Silt Fences
   - Security Fences
   - Hay Bales
   - Floating Docks

2. Provides hauling services, water and electricity for the Independent Contractors, Sub-Contractors, and boat owners.
3. Provides dry-stack boat storage area, dry dock, and tie-down areas for its customers.
   a. Dry Stack Racks – Three (3) stories rack for dry storage
   b. Dry Storage – Boat storage area over ground

4. Fuel dispatch area for operations
   a. One (1) diesel aboveground storage tank (2,000 gal)
   b. One (1) gasoline aboveground storage tank (2,000 gal)

5. Main electric generator (3,634 HP)
   a. One (1) diesel aboveground storage tank (6,000 gal)

6. Has control over the Fuel Dock Operation
   a. Fuel Dock
      - Three (3) diesel fuel pumps stations and Three (3) gasoline fuel pump stations
      - Two (2) diesel underground storage tanks (12,000 gal.)
      - One (1) gasoline underground storage tank (12,000 gal.)
      - Underground lines
      - One (1) sanitary pump for boats

7. Provides a Used Oil Recovery Facility for Marina Operations, Boat Owners and Contractors.
8. Provides areas and running water for customers boat wash (does not offer boat wash services).

B. Independent Contractors Operations

The boat maintenance operation generally includes hull cleaning, pressure washing, paint scraping, and sanding, painting, engine and part lubrication, mechanical and cosmetic repairs.
Independent Contractors have direct control over their respective clients' boat maintenance and repairs activities and the tools, equipment and materials required to perform these tasks. The Marina does not have any control over such operations.

1. Equipment Storage Private Concessionary (RIMCO)
   a. One (1) diesel aboveground storage tank

2. Boats Maintenance and Repairs – Eight (7) locations for Independent Contractors
   a. Contractor No. 1 – Wilco Welding Services
      - Welding services
      - 314 ft^2 building

   b. Contractor No. 2 – RS Marine
      - Boats full maintenance and repairs
      - 320 ft^2 building

   c. Contractor No. 3 – Wally Castro Marine
      - Boats full maintenance and repairs
      - 3,149 ft^2 building

   d. Contractor No. 4 – Island Marine Inc.
      - Boats full maintenance and repairs
      - 534 ft^2 building

   e. Contractor No. 5 – One Stop Marine
      - Boats full maintenance and repairs
      - 1,674 ft^2 building

   f. Contractor No. 6 – The Yacht Garage, Inc.
      - Boats full maintenance and repairs

- 9,439 ft^2 building

g. Contractor No. 7 – RIMCO, Inc.
  - Engine maintenance and repair
  - 577 ft^2 building

h. Contractor N0. 8 – Chamo’s Boat Repair
  - Boats full maintenance and repair
  - 200 ft^2 building

In general, the Independent Contractors operate and manage their own facilities and leased premises, where they have sole, daily control over the following activities (as applicable):

a. Tools and Equipment
  - Air Compressors
  - Pressure washers
  - Pneumatic jacks
  - Paint and solvent mixers
  - Sanders
  - Scaffolds
  - Tarps and curtains
  - Portable power generators
  - Welding equipment
  - Grinders

b. Storage
  - Solvents
  - Abrasive materials
  - Paint
  - Lubricants (Oils and Greases)
  - Fuels
  - Tools and tool spare parts
  - Boats spare parts
  - Jack Stands
  - Wooden Supports
  - Spare parts (Electrical, Mechanical, Plumbing)

The Independent Contractors have the contractual obligation to implement BMP’s for marinas as applicable to their respective operations.

For the purposes of this permit, only the Industrial areas will be included for the MSGP requirements since commercial operations are not subject to MSGP coverage.

2.5 General Location Map

Attachment A provides a general location map for this facility superimposed the U.S. Geological Survey (USGS) quadrangle map. It illustrates the location of the facility and all receiving waters of the facility stormwater discharges.

2.6 Site Map

Attachments B through N includes a set of maps and plans illustrating the following information:

A. Boundaries of the property and the size of the property in acres;
B. Location and extent of significant structures and impervious surfaces;
C. Directions of stormwater flow;
D. Locations of all stormwater control measures;
E. Locations of all receiving waters;
F. Locations of all stormwater conveyances including ditches, pipes and swales;
G. Locations of potential pollutant sources;
H. Locations of all stormwater monitoring points;
I. Locations of stormwater inlets and discharge points;
J. Locations of the following activities where such activities are exposed to precipitation:
    1. fueling stations;
    2. vehicle and equipment maintenance and/or cleaning areas;
    3. locations used for the treatment, storage or disposal of wastes;
    4. liquid storage tanks;
    5. storage areas;
    6. immediate access roads used or traveled by carriers waste material generated at the facility;
    7. transfer areas;
    8. machinery; and
    9. locations and sources of run-on to your site from adjacent property.

3 Potential Pollutant Sources

Puerto del Rey Marina facilities have industrial areas where the potential pollutant sources are located. These are comprised of the activities related to the operation of the marina and the operation of internals contractors. Most of the industrial activities are concentrated in the boatyard area.

3.1 Potential Pollutants Associated with Industrial Activity

Table 2: Potential Pollutant Sources

#	Activity/Area	Pollutant	Discharge Points
1	Contractor – Wilco Welding Services	Paint solids, heavy metals, suspended soils, debris, spent abrasives, solvents, dust, low density waste (floatable), fuel, oil, ethylene glycol, acid/alkaline wastes, detergents, rags, batteries and loose parts.	BY – 5
2	Contractor – RS Marine		BY-5, BY-6 & BY-7
3	Contractor – Wally Castro Marine		BY-5
4	Contractor – Island Marine		BY-1, BY-2 & BY-5
5	Contractor – One Stop Marine		BY-3, BY-4, BY-5, BY-6 & BY-7
6	Contractor – The Yacht Garage Inc.		BY-1
7	Contractor – RIMCO	Diesel, oil, acid/alkaline wastes, detergents, rags, batteries and loose parts.	BY-8
8	Contractor – Chamo’s Boat Repair	Paint solids, heavy metals, suspended soils, debris, spent abrasives, solvents, dust, low density waste (floatable), fuel, oil, ethylene glycol, acid/alkaline wastes, detergents, rags, batteries and loose parts.	BY-5
9	Fuel Dock	Fuel, oil, heavy metals, material being stored, rags.	FD-3A

Table 2: Potential Pollutant Sources			
#	**Activity/Area**	**Pollutant**	**Discharge Points**
10	PDR Maintenance Facilities	Paint solids, heavy metals, suspended soils, debris, spent abrasives, solvents, dust, low density waste (floatable), fuel, oil, ethylene glycol, acid/alkaline wastes, detergents, rags, batteries, and loose parts.	BY-1
11	Used Oil Recovery Facilities	Fuel, oil, heavy metals, material being stored and rags.	DD-5
12	Garbage Compactor Bin	Leachate.	BY-1
13	Dry Stack Area	Paint solids, heavy metals, suspended soils, debris, spent abrasives, solvents, dust, low density waste (floatable), fuel, oil, grease detergents, rags, spills and drips.	DD-2, DD-3, DD-4 & DD-5
14	Boat Maintenance: Minimal Repairs, Boat Wash, Engine Maintenance	Suspended soils, debris, dust, low density waste (floatable), fuel, oil, grease, detergents, rags, spills and drips.	DD-3, VA-1, VA-2, VA-3, VA-5A, VA-6, VA-7, VA-8, VA-9
15	Fishermen Car Parking	Spills, drips, gasoline, oil and grease.	FD-3A
16	Haul Out / Splash Area	Spills, drips, gasoline, oil and grease.	DD-2
17	Fuel Dispatch Area for Operation	Diesel and Gasoline	BY -1 & BY-5
18	Main Electric Generator Tank	Diesel	BY-1
19	Storage and Maintenance of Heavy Equipment	Spills, drips, gasoline, oil, and grease.	TC-1 & TC-2

3.2 Spills and Leaks

In the areas where there is potential for spills and leaks, the stormwater discharges at specific point sources. These outfalls contain a series of environmental controls that are inspected and are subject to scheduled maintenance.

Refer to the information included in Table 2.

Until the effective date of this SWPPP, Puerto del Rey Marina has no record of reportable spills at the facilities.

3.3 Unauthorized Non-stormwater Discharges Documentation

Description of this facility's unauthorized non-stormwater discharge evaluation:

- Date of evaluation: March 9 through April 30, 2021
- Description of the evaluation criteria used: A visual approach of the site was chosen to assess the facility during the evaluation period in search of evidence of stormwater pollution, such as abnormal color, odor, diminished clarity, floating solids, settled solids, suspended solids, foam, and oil sheens, among other indicators.
- List of the drainage points that were directly observed during the evaluation: See **Attachment G**.
- After the evaluation under the explained criteria, we did not identify unauthorized discharges at the site. The monitoring that has been carried out under the previous permit contributes to maintaining and improving the measures implemented during the MSGP 2015, thus avoiding the unauthorized discharges. Currently, the following has been maintained:

    - Exposed soil reserves and construction debris identified at the site are kept eliminated.
    - Covered and/or scrap industrial materials stored outside buildings are kept eliminated.
    - A correct garbage collection is maintained with trash cans with lids and covered containers.
    - Berms are provided at specific locations on the site to divert stormwater to controlled discharge points.
    - The boat maintenance area is kept in designated areas.
    - The independent contractors collect their wastewaters generated by their industrial operation and dispose of it properly.

3.4 Sampling Data Summary

The following graphs show the results obtained at the different discharge points from a period starting in September 2015 until September 2020.

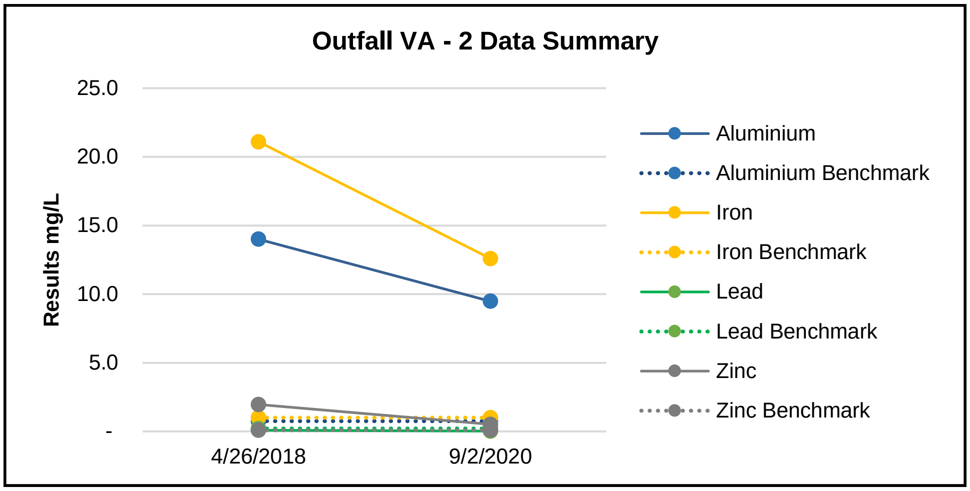

Graph 1: Outfall VA - 2 Data Summary

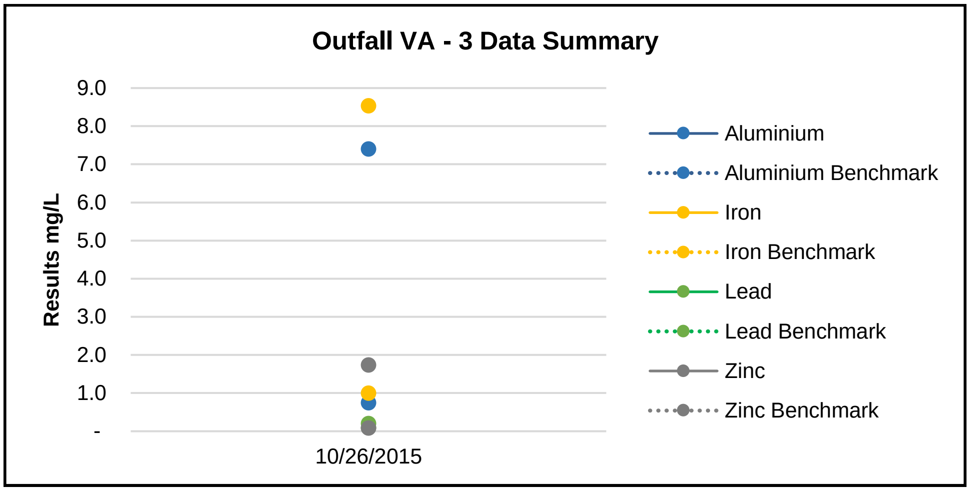

Graph 2: Outfall VA - 3 Data Summary

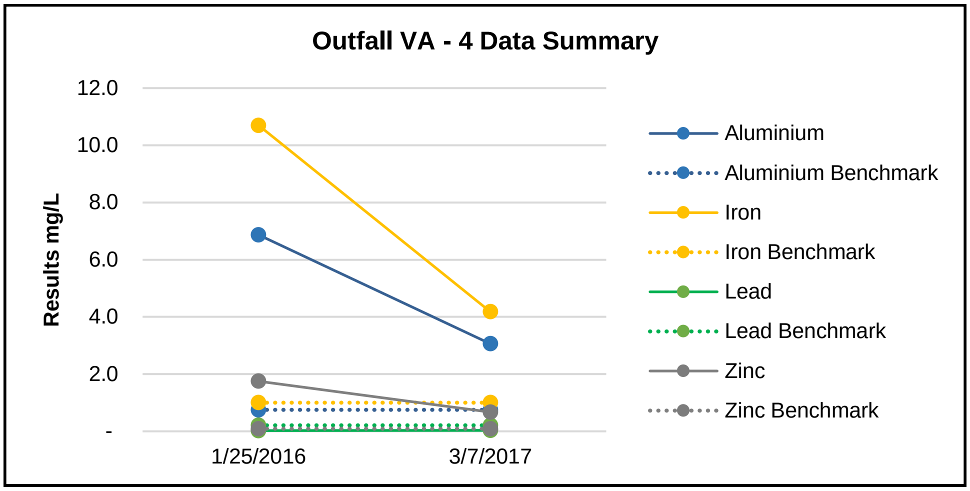

Graph 3: Outfall VA - 4 Data Summary

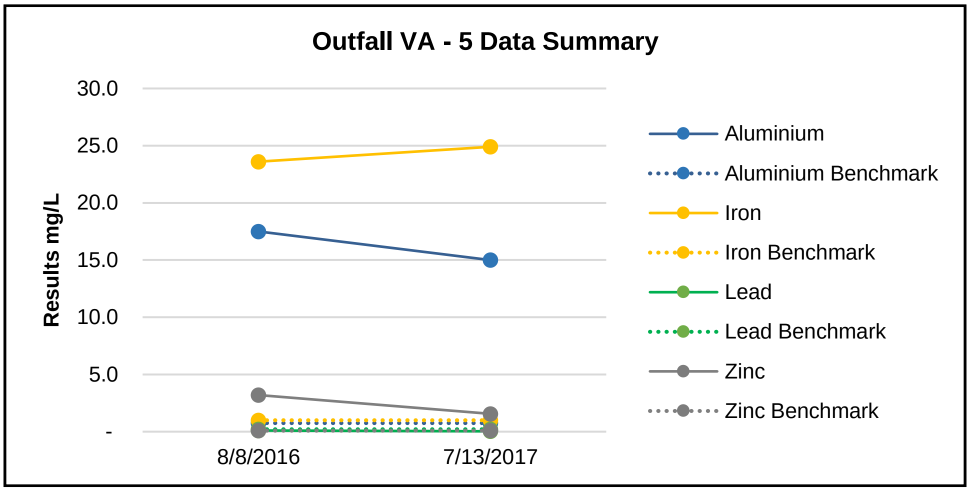

Graph 4: Outfall VA - 5 Data Summary

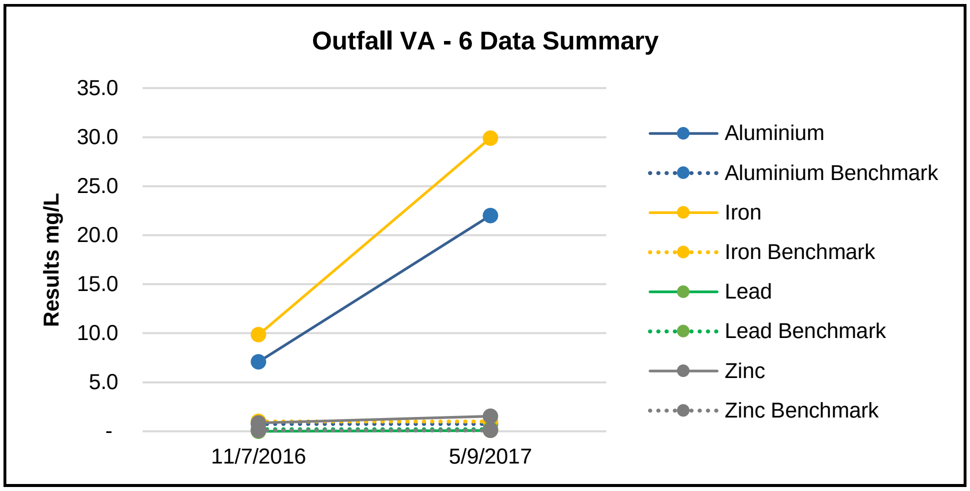

Graph 5: Outfall VA - 2 Data Summary

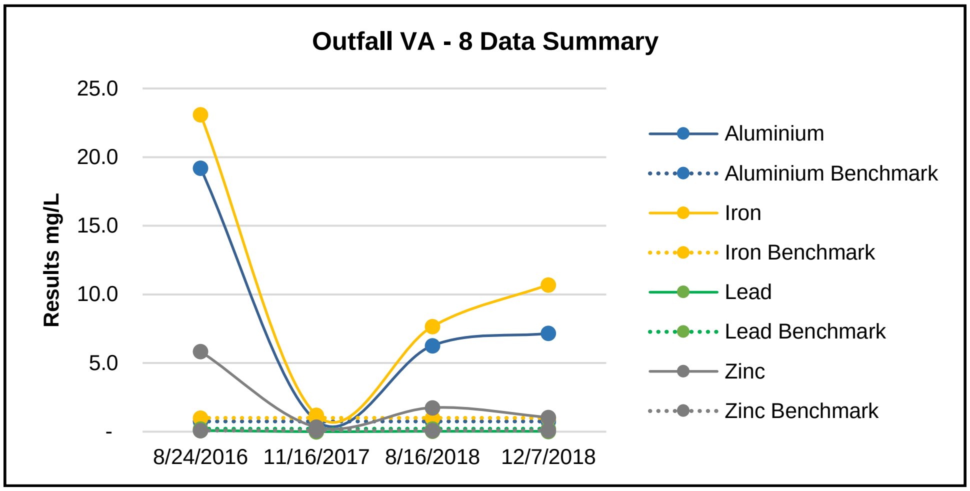

Graph 6: Outfall VA - 2 Data Summary

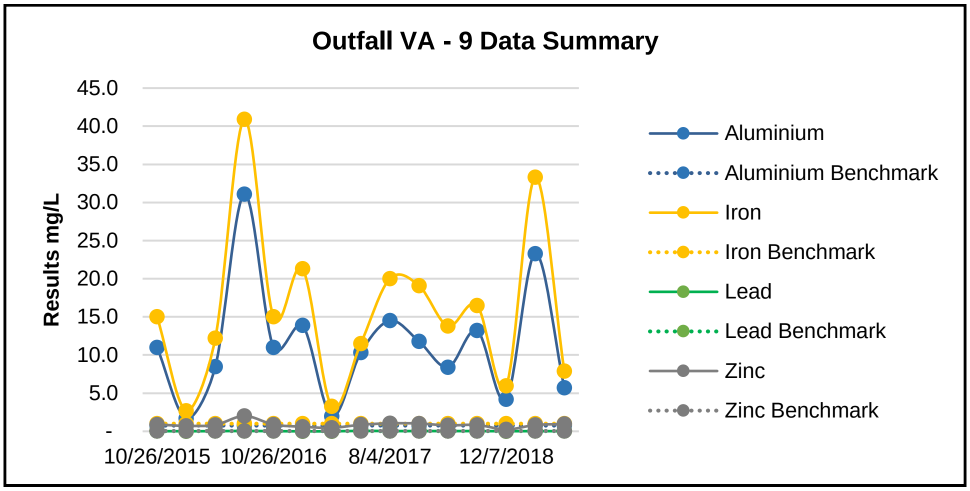

Graph 7: Outfall VA - 9 Data Summary

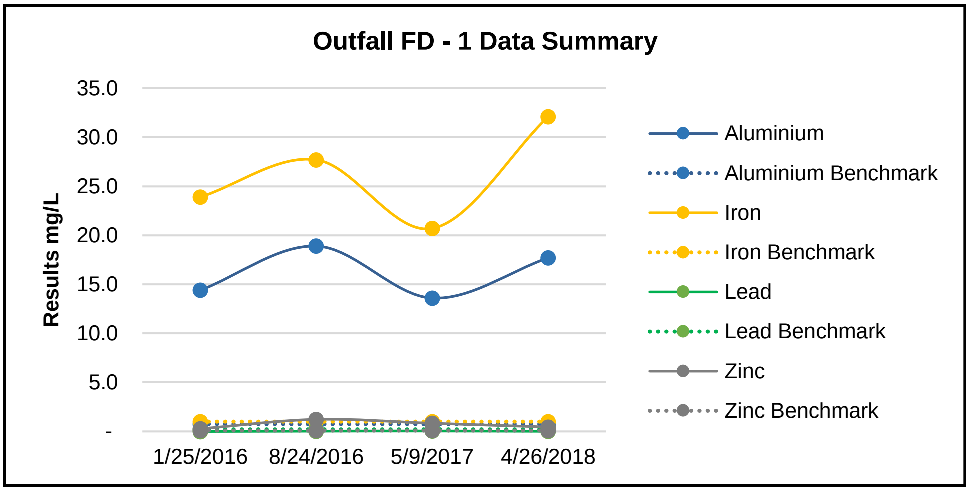

Graph 8: Outfall FD - 1 Data Summary

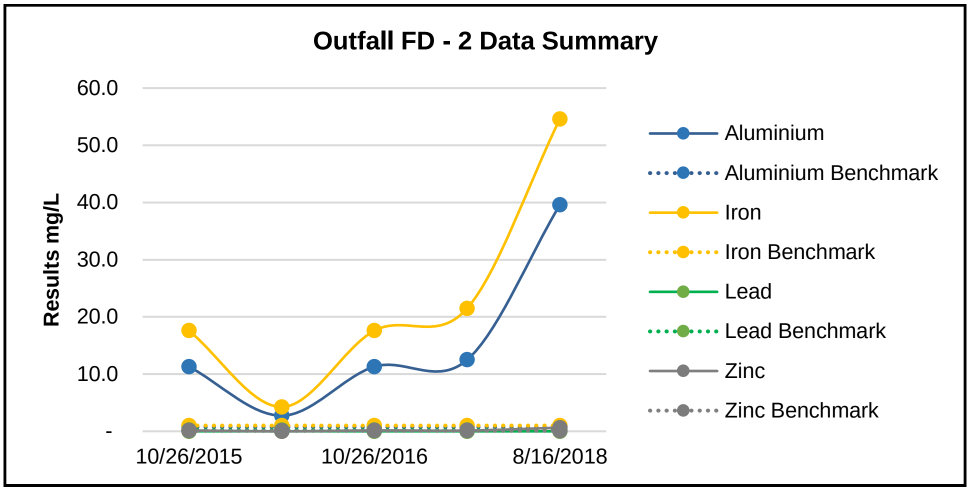

Graph 9:Outfall FD - 2 Data Summary

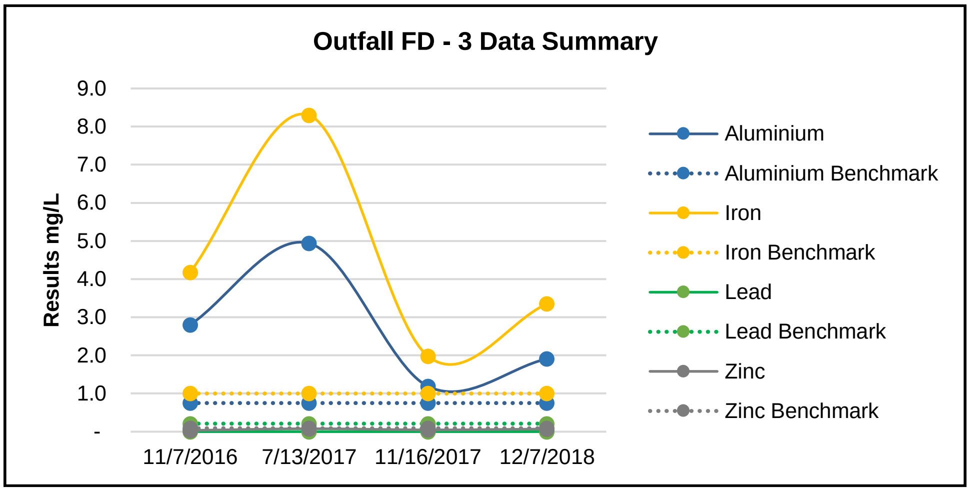

Graph 10: Outfall FD - 3 Data Summary

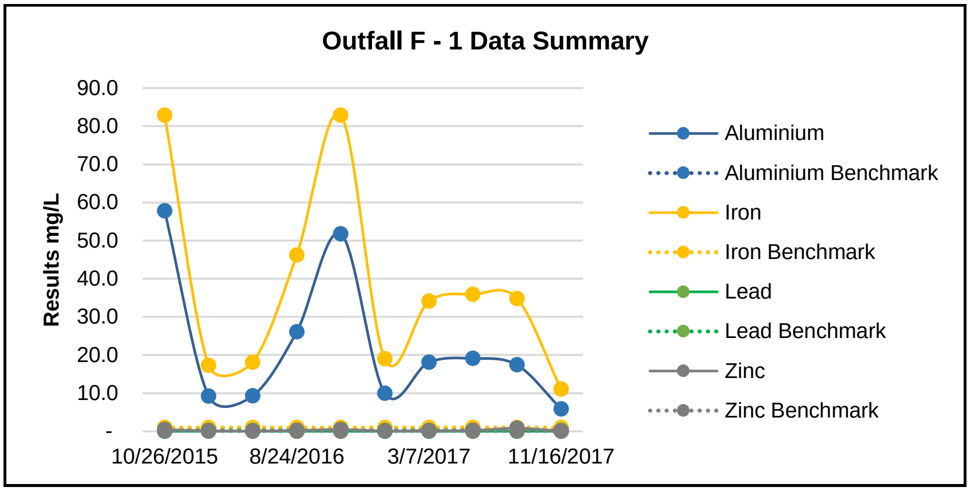

Graph 11: Outfall F - 1 Data Summary

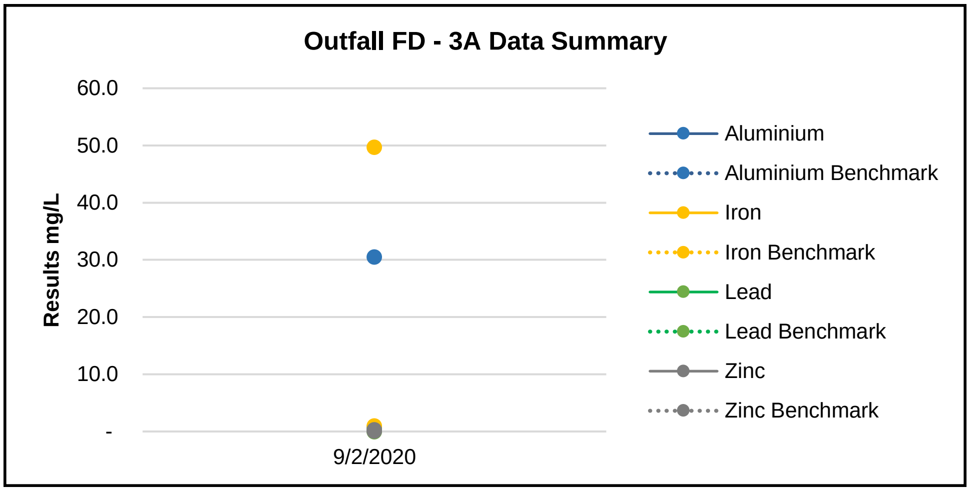

Graph 12: Outfall FD - 3A Data Summary

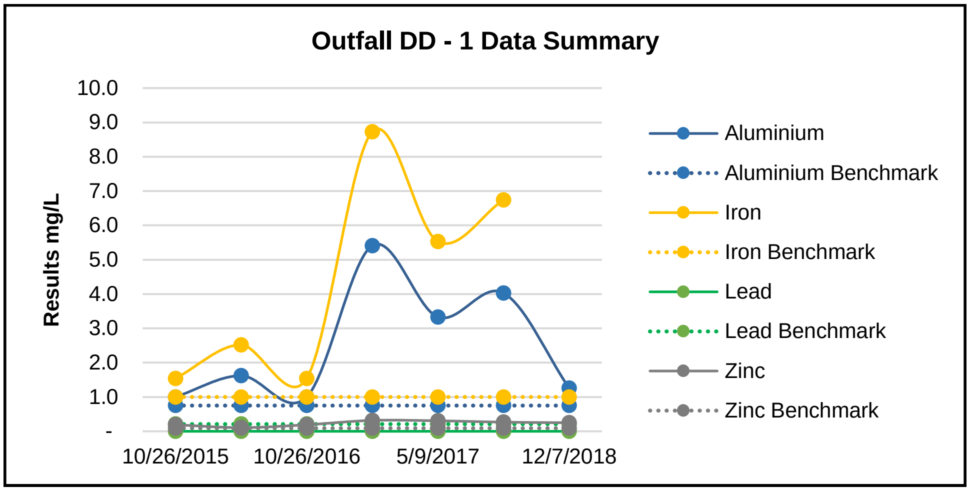

Graph 13:Outfall DD - 1 Data Summary

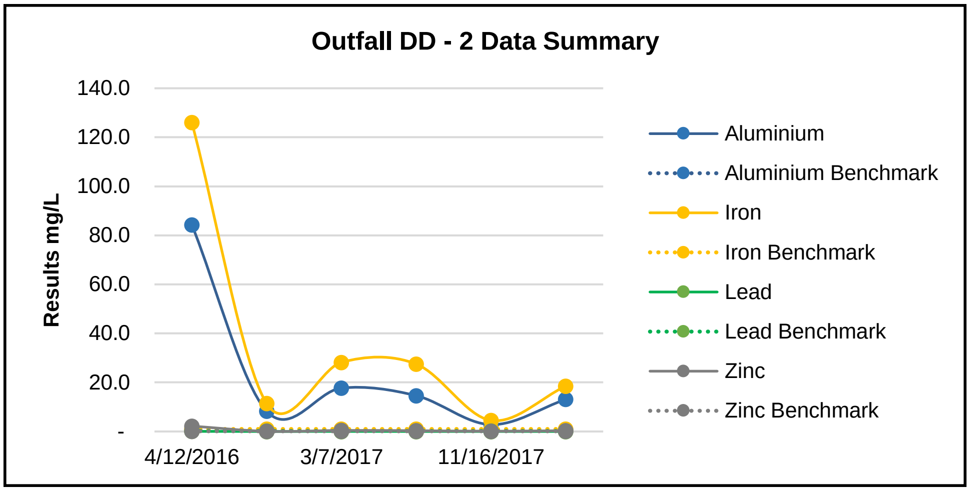

Graph 14: Outfall DD - 2 Data Summary

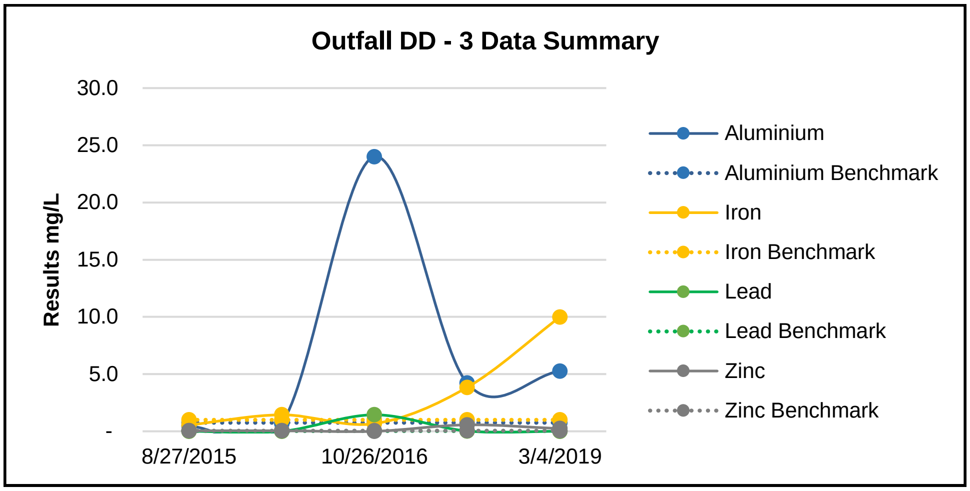

Graph 15: Outfall DD - 3 Data Summary

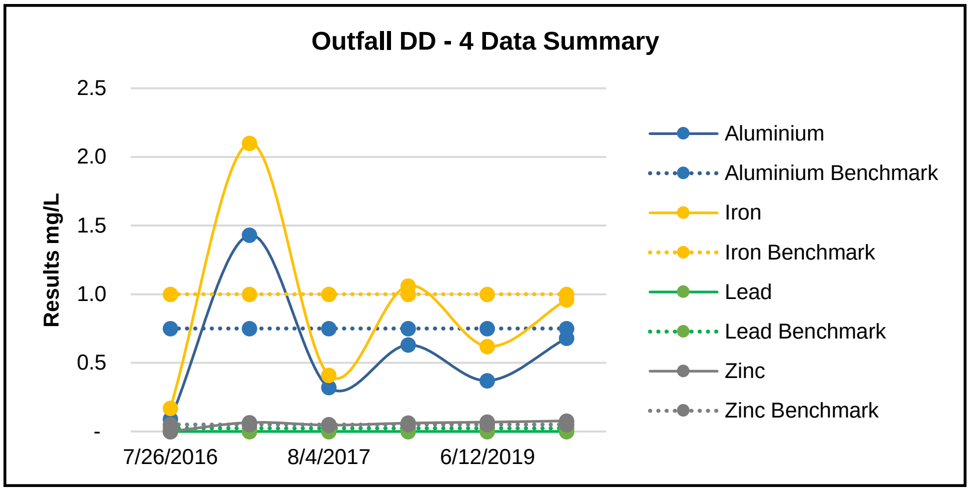

Graph 16: Outfall DD - 4 Data Summary

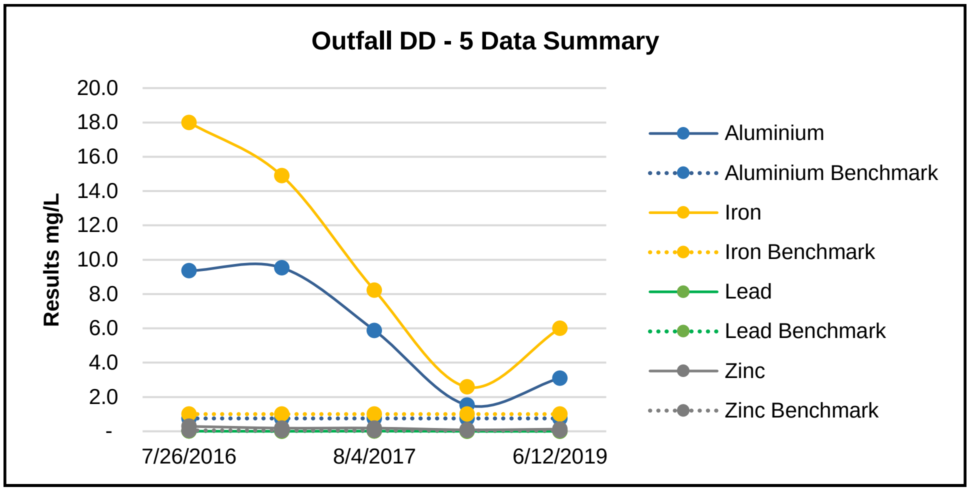

Graph 17: Outfall DD - 5 Data Summary

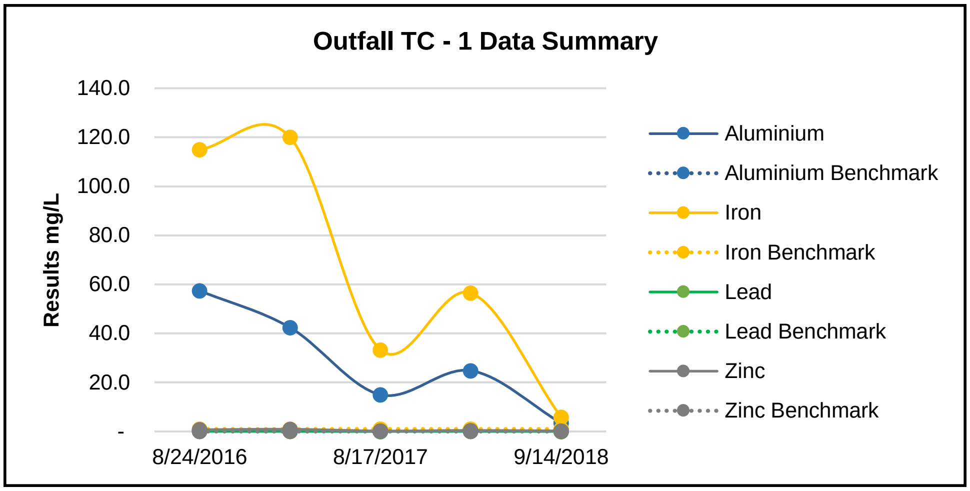

Graph 18: Outfall TC - 1 Data Summary

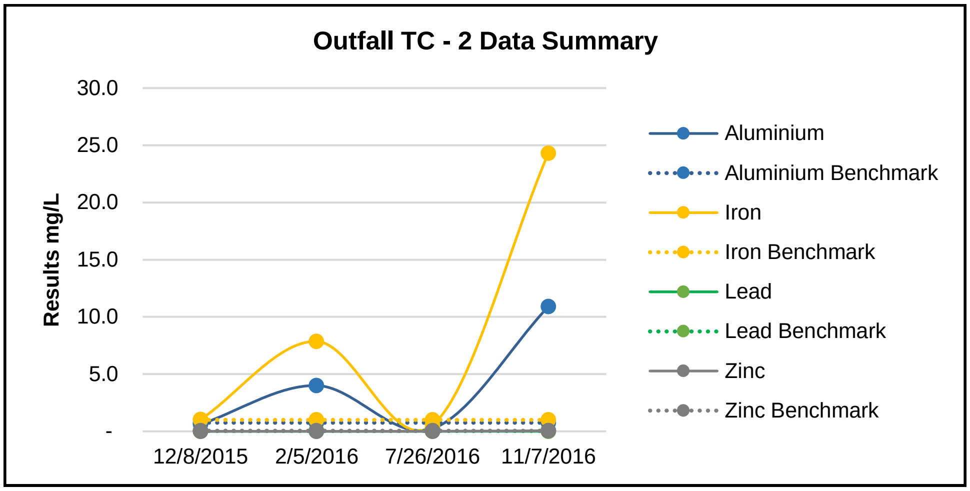

Graph 19: Outfall TC - 2 Data Summary

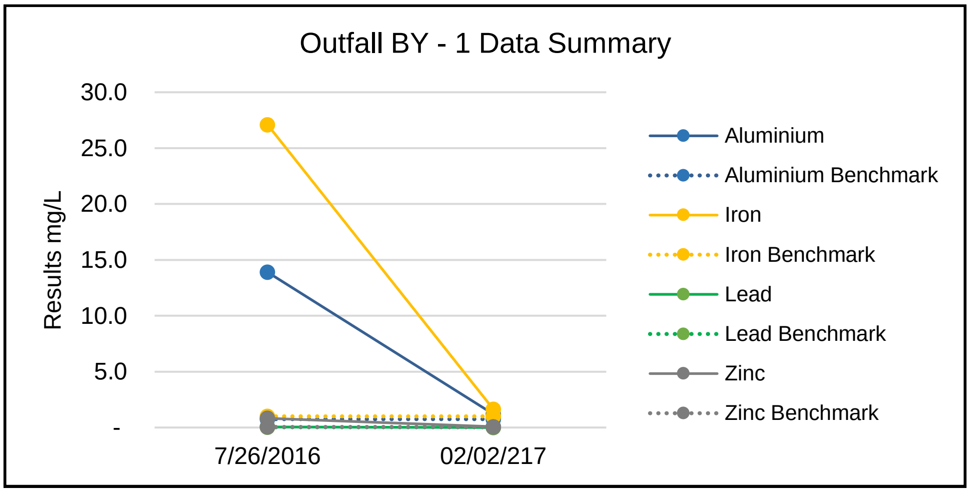

Graph 20: Outfall BY - 1 Data Summary

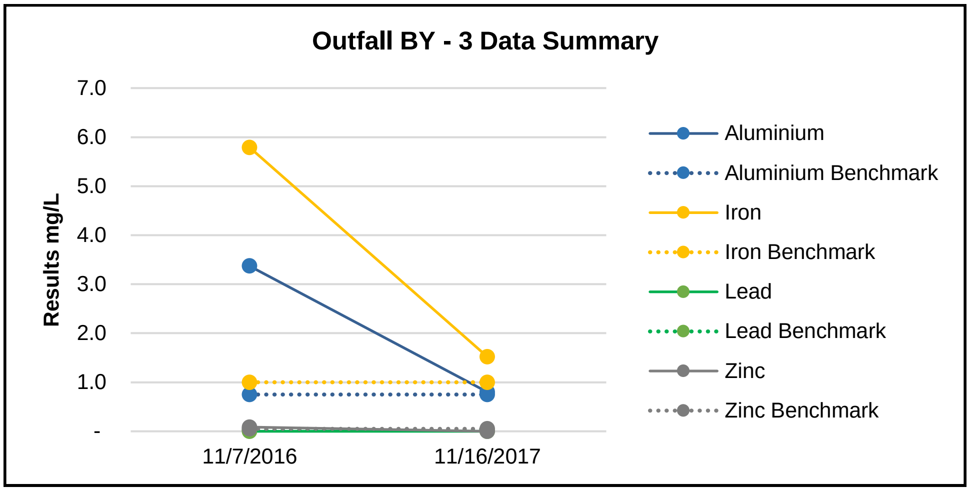

Graph 21: Outfall BY - 3 Data Summary

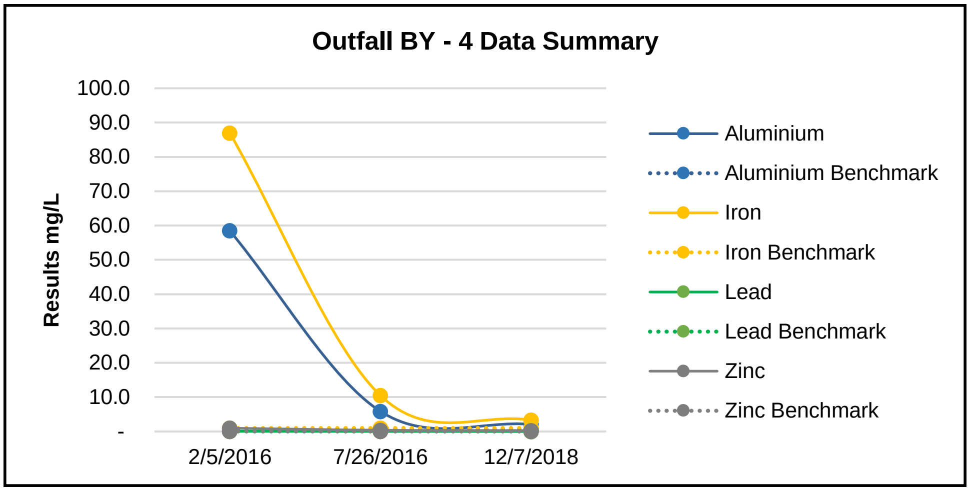

Graph 22: Outfall BY - 4 Data Summary

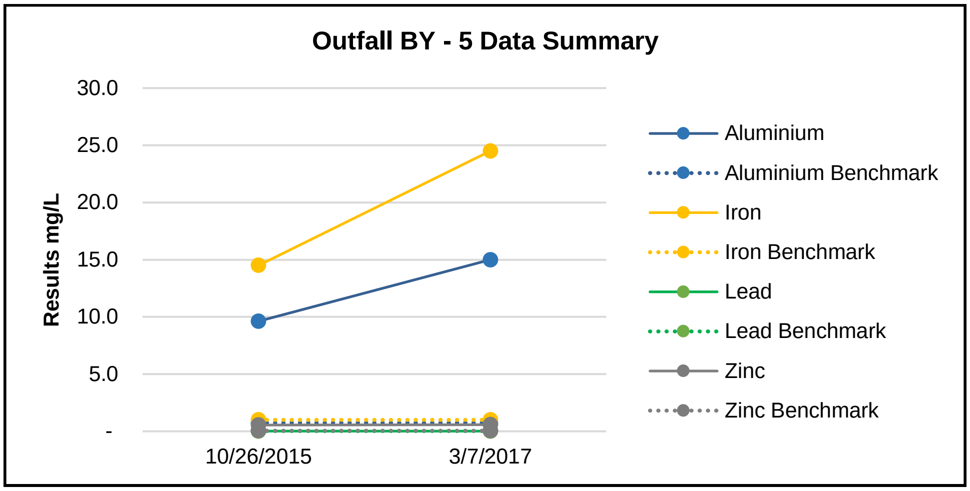

Graph 23: Outfall BY - 5 Data Summary

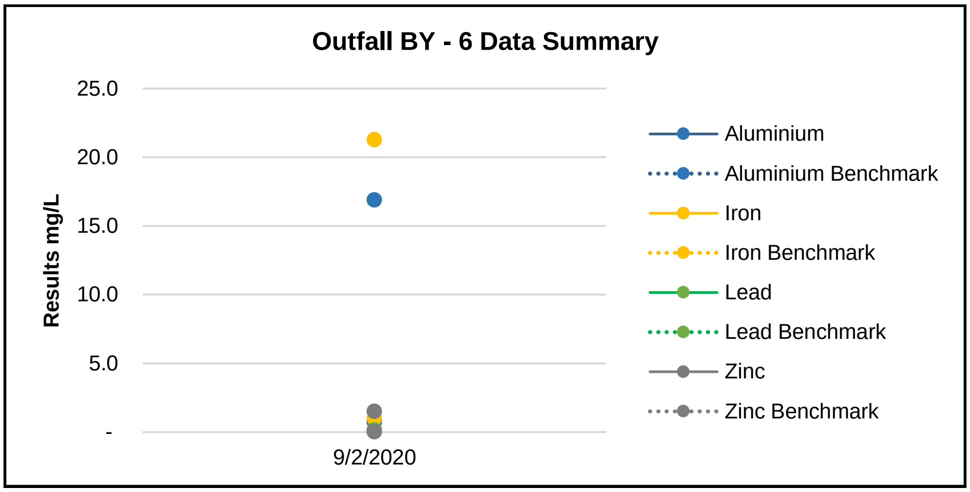

Graph 24: Outfall BY - 6 Data Summary

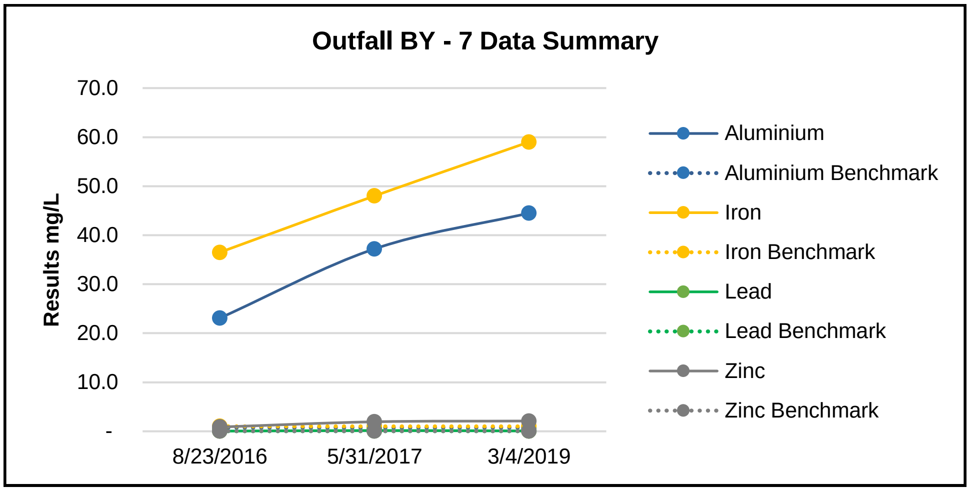

Graph 25: Outfall BY - 7 Data Summary

As is shown in the included graphs, the erratic benchmark exceedances suggest the presence of naturally background pollutants in premises soils. Samples of soil taken outside the property have shown traces of these same metals identified in the monitoring process.

4 Stormwater Control Measures

The stormwater control measures are selected and/or designed to reduce exposure, thus preventing stormwater from coming into contact with pollutants. Using control measures in combination rather than in isolation helps to minimize pollutants. This also requires assessing the type and quantity of pollutants, including their potential to impact receiving water quality. It also entails minimizing impervious areas at the facility and infiltrating runoff onsite.

4.1 Non-numeric Technology-based Effluent Limits (BPT/BAT/BCT)

4.1.1 Minimize Exposure

A. All Industrial Areas (General)
1. Prohibit washing and maintenance of equipment, cars, and boats outside the designated areas where wash waters are collected and properly disposed of.
2. Prohibit equipment, cars, and boats with oil leaks in uncontained areas.
3. Prohibit uncontained spray painting, blasting or sanding activities over open water.
4. Prohibit blasting and sanding outside of the boat maintenance areas and without booth or tarp enclosures or similar enclosures.
5. Prohibit outside spray painting, blasting or sanding activities during windy conditions that render containment ineffective.

6. Keep all the industrial operation areas clean and organized.
7. Sprinkle with water or wet down soils to minimize airborne dust as long as it does not result in a wastewater discharge.
8. Routinely clean up sediment from catch basins.
9. Provide exposed containers in use with a secondary containment system.
10. In the event of a reportable accidental discharge of oil or hazardous material into waters of Puerto Rico or onto land with a potential for entry into state waters, immediately notify the Marina Security and Safety Office (787) 860-1000, the Environmental Emergencies Division at the Department of Natural and Environmental Resources (787) 767-8181 ext. 3232 and the Environmental Protection Agency National Response Center at 1-800-424-8802.
11. Immediately repair or replace leaking connections, valves, pipes, hoses, and equipment that causes the contamination of stormwater.
12. Drain dumpsters and/or dumpster pads to sanitary sewer. Keep dumpster lids closed.
13. Compactor Bins will be located in an area with a secondary containment. In the event of a reportable accidental discharge of hazardous material into waters of the state or onto land with a potential for entry into state waters, immediately notify the Marina Security and Safety Office (787) 860-1000, the Environmental Emergencies Division at the Department of Natural and Environmental Resources (787) 767-8181 ext. 3232 and the Environmental Protection Agency National Response Center at 1-800-424-8802.
14. When water or sediments are removed from electric transformer vaults, a visual inspection will be performed to determine whether contaminants might be present before disposing of the water and sediments. This includes inspecting for the presence of oil or sheen and determining from records or testing if the transformers contain PCBs. If records or tests indicate that the sediment or water are contaminated above applicable levels, these media will be managed in accordance with applicable federal and state regulations.
15. Storm drain covers, filter fabric, or similarly effective runoff control devices will be installed in those areas identified with potential of carrying dust, grit, wash water, or other pollutants into a catch basin. Collect contaminated runoff and solids and properly dispose of such wastes.
16. Open paved areas, storage areas and driveways will be cleaned regularly to collect dirt, waste, and debris.
    a. If washing at any of these areas is conducted, wash water will be collected and discharged to a sanitary sewer or collect it for off-site disposal to an authorized facility.

B. On-Site Refueling
1. Presence and the constant observation/monitoring of the fuel truck driver/operator will be required at the fuel transfer location at all times during fuel transfer and the following procedures will be implemented:
   a. Locating the point of fueling at least 25 feet from the nearest storm drain or inside an impervious containment with a volumetric holding capacity equal to or greater than 110 percent of the fueling tank volume, or covering the storm drain to ensure no inflow of spilled or leaked fuel.
   b. The handling and operation of fuel transfer hoses and nozzle, drip pan(s), and absorbent pads as needed to prevent spills/leaks of fuel from reaching the ground, storm drains, and receiving waters.
      - Placement of a drip pan, or an absorbent pad under each fueling location prior to and during all dispensing operations.

   c. Not extending the fueling hoses across a traffic lane without fluorescent traffic cones, or equivalent devices, conspicuously placed so that all traffic is blocked from crossing the fuel hose.
   d. Removing the fill nozzle and cessation of filling when the automatic shut-off valve engages. Do not allow automatic shutoff fueling nozzles to be locked in the open position.
   e. Not “topping off” the fuel receiving equipment.

2. The truck driver/operator of the fueling vehicle will be provided with:
   a. Adequate flashlights or other mobile lighting to view fill openings with poor accessibility.
   b. Two-way communication with his/her home base.

3. The truck driver/operator will be trained annually in spill prevention and cleanup measures and emergency procedures.
   a. The fueling operating procedures will be properly signed and dated by the responsible manager, distributed to the operators, retained in the organization files, and made available in the event an authorized government agency requests a review.

4. Drip pans will be placed beneath all mounted container taps and at all potential drip and spill locations during filling and unloading of containers.
5. A minimum amount of the following spill clean-up materials is available and ready for use in all fueling vehicles:
   a. Non-water absorbents;
   b. A storm drain plug or cover kit;
   c. A non-water absorbent containment boom of a minimum 10 feet in length;

  - d. A non-metallic shovel; and,
  - e. One five-gallon bucket with lid.

C. Contractors and Marina Maintenance Facilities

1. Areas protected with berms have been designated exclusively for outside washing, boat and parts maintenance and pressure washing. When in use, these areas are provided with a removable impervious material and a pit to collect non-stormwater. Contaminated water is then diverted through a filtering material before sending it to a holding tank to be reused or for proper disposal.
2. Stripping and scraping will be conducted over a suitable ground cover.
3. Vehicle/equipment washing will be performed in a designated area where wash water is collected and properly disposed of.
4. Pollutant sources such as the used absorbent rags and materials recovery area will be covered at all times.
5. Brushes and tools covered with non-water-based paints, finishes, or other materials will be cleaned in a manner that allows collection of used solvents (e.g., paint thinner, turpentine, xylol, etc.) for recycling or proper disposal.
6. Exposed industrial scrap material will be covered or eliminated.
7. Toxic materials will be covered during precipitation events and when not in use to prevent contact with stormwater.
8. Dumpster lids will be kept closed when not in use.
9. Drained oil filters will be kept in a suitable container or drum.
10. Greasy rags, oil filters, air filters, batteries, spent coolant, and degreasers will be properly disposed of.
11. Remove batteries and liquids from vehicles and equipment in designated areas designed to prevent stormwater contamination. Store cracked batteries in a covered non-leaking secondary containment system.
12. Contractors and employees will be trained in the careful application of paints, finishes, and coatings to reduce misuse and over spray, use ground or drop cloths underneath outdoor painting, scraping, sandblasting work, and thoroughly clean and temporarily store collected debris daily.

D. Fuel Dock

1. Underground storage tanks are equipped with electronic release detection system (Veeder Root), which contains spill prevention and overfill detection alarms in accordance with UST regulations.
2. The person conducting the fuel transfer will be present at the fueling pump during fuel transfer, particularly at unattended or self-serve stations.
3. Drip pans will be placed beneath all mounted container taps and at all

    potential drip and spill locations during filling and unloading of containers.
    4. When not in use, fuel hoses will be stored in storing boxes provided with drip pans.
    5. Automatic shutoff on the fuel nozzle will be inspected regularly to confirm proper functioning.
    6. Employees will be trained on the proper use of fuel dispensers. “No Topping Off” signs (topping off gas tanks causes spillage and vents gas fumes to the air) will be posted.
    7. Loading/Unloading from/to Marine Vessels:
        a. Facilities and procedures for the loading or unloading of petroleum products will comply with Coast Guard requirements.

E. Dry Dock
    1. Boat washing activities will only be allowed where the existing infrastructure has been improved to collect wash waters and divert such waters through a filtering material before sending it to a holding tank to be reused for dust controls or otherwise properly disposed.
    2. Silt fences and hay bales will be installed at existing storm sewer inlets located within the dry dock area.

F. Wet Slip
    1. Pressure washes and underwater hull cleaning is not allowed in the Wet Slips area.
    2. Fish waste disposal in the marina basin is not allowed.
    3. Fish cleaning will not be allowed on docks and floats. It will only be allowed at fish cleaning stations where available.
    4. Spraying, blasting, or sanding activities over open water or where wind may blow paint into water is not allowed.

4.1.2 Good Housekeeping.

A. Regular pickup and disposal of waste materials.
B. Routine inspections for leaks and of the condition of drums, tanks, and containers.
C. Paved surfaces in industrial areas will be swept to remove accumulated pollutants.
D. Trash bins will be collected at a minimum frequency of once a week. All dumpsters will be kept in good conditions and fit with a lid that will be kept closed when not in use.
E. Yard maintenance and cleanup of scrap materials will be performed weekly.
F. Recyclable material is separated and collected weekly by the Municipality of Fajardo.
G. Collected vegetation will not be disposed into waterways or storm drainage

systems.

H. All accessible work, service and storage areas will be cleaned regularly to remove debris, spent sandblasting material, and any other potential stormwater pollutants.
I. Spent abrasives will be collected regularly and stored under cover to wait for proper disposal.
J. All materials will be stored in appropriate containers.
K. Equipment on fueling vehicles, particularly hoses and nozzles will be maintained regularly and replace at established intervals to prevent failures.

4.1.3 Maintenance

A. Fuel Dock

Table 3: Fuel Dock Maintenance

Stormwater Management Practice	Maintenance Procedure
Store spill containment and control materials in a clearly marked and easily accessible location, attached or adjacent to the fuel dock.	Routinely inspect stored control materials to confirm availability. Keep material inventory.
Keep oil absorbent pads and pillows available at the fuel dock for staff and customers to mop up drips and small spills.	Inspect monthly stored control materials to confirm availability. Keep material inventory.
Keep fuel transfer equipment, such as hoses and pipes in good operational conditions.	Inspect monthly fuel transfer equipment, such as hoses and pipes, and immediately repair if needed.
Place plastic or nonferrous drip trays lined with oil absorbent materials beneath fuel connections.	Inspect monthly drip trays and substitute used absorbent material with new ones.
Keep used absorbent materials in a suitable container or drum.	At the end of the daily operation of the Fuel Dock, confirm drums with used absorbent materials are properly stored in a closed drum over a secondary containment.
Convey sanitary sewage to pump-out stations, portable on-site pump-outs, or commercial mobile pump-out facilities or other appropriate onshore facilities.	Inspect monthly sanitary pump system.

Table 3: Fuel Dock Maintenance	
Stormwater Management Practice	**Maintenance Procedure**
Inspect the tank containment areas regularly to identify problem components such as fittings, pipe connections, and valves, for leaks/spills, cracks, corrosion, etc.	Inspect quarterly fuel tanks and pumps system.

B. Varadero

Table 4: Varadero Areas Maintenance	
Stormwater Management Practice	**Maintenance Procedure**
Minimize the use of detergents, caustic cleaners and other additives when pressure washing.	Inspect monthly boat wash operations to confirm the use of recommended detergents.
Use drip pans or containers under parts or vehicles that drip or that are likely to drip liquids, such as during dismantling of liquid containing parts or removal or transfer of liquids.	Contractors will be required to strictly follow this BMP. Inspect monthly stored control materials to confirm availability. Keep material inventory

C. Contractors Areas (Boatyard)

Table 5: Contractors Areas Maintenance	
Stormwater Management Practice	**Maintenance Procedure**
Pressure wash wastewater should not be discharged directly to surface waters or the ground. Marina facilities should try to collect the wash water, treat it and either dispose of it at a sewage treatment plant (through discharge to a sanitary sewer or by hauling using a licensed hauler) or recycle it.	Plastic impervious material, berms, sump pits, tanks and pump system will be inspected daily to confirm proper operation. Remove and properly dispose solids collected in sumps on a weekly basis.

Table 5: Contractors Areas Maintenance	
Stormwater Management Practice	**Maintenance Procedure**
Minimize the use of detergents, caustic cleaners and other additives when pressure washing.	Inspect monthly boat wash operations to confirm the use of recommended detergents.
Stripping and scraping must be conducted over a suitable ground cover.	Plastic impervious surfaces, berms, sump pits, tanks and pump system will be inspected weekly to confirm proper operation.
Immediately repair or replace leaking connections, valves, pipes, hoses and equipment that causes the contamination of stormwater.	Contractors will be required to strictly follow this BMP. Keep oil absorbent pads and pillows available for contractors, staff and customers to mop up drips and small spills. Routinely inspect stored control materials to confirm availability.
Use drip pans, drop cloths, tarpaulins or other protective devices in all paint mixing and solvent operations unless carried out in impervious contained and covered areas.	Contractors will be required to strictly follow this BMP and keep collecting containers and impervious materials available and in good conditions. Routinely inspect contractor's facilities to identify paint residues.
Do not dump or pour waste materials down floor drains, sinks, or outdoor storm drain inlets that discharge to surface water.	Contractors will be required to strictly follow this BMP. Routinely inspect contractor's facilities to identify waste residues.
Do not allow any wash waters to be discharged to storm drains or to receiving water without proper treatment.	Contractors will be required to strictly follow this BMP. Sump pits, tanks and pump system will be inspected weekly to confirm proper operation.
Use drip pans or containers under parts or vehicles that drip or that are likely to drip liquids, such as during dismantling of liquid containing parts or removal or transfer of liquids.	Contractors will be required to strictly follow this BMP. Inspect monthly stored control materials to confirm availability. Keep material inventory.

Table 5: Contractors Areas Maintenance	
Stormwater Management Practice	**Maintenance Procedure**
Inspect container storage areas regularly for corrosion, structural failure, spills, leaks, overfills, and failure of piping systems. Check containers daily for leaks/spills. Replace containers and replace and tighten bungs in drums as needed.	Contractors will be required to strictly follow this BMP. Inspect monthly fuel tanks and pumps system.

D. Dry Dock Areas

Table 6: Dry Dock Areas Maintenance	
Stormwater Management Practice	**Maintenance Procedure**
Wastewater will not be allowed to be discharged into storm drains or to receiving water without proper treatment.	Sump pits, tanks and pump system will be routinely inspected weekly to confirm proper operation.
Minimize the use of detergents, caustic cleaners, and other additives when pressure washing.	Routinely inspect boat wash operations to confirm the use of recommended detergents.
Dispose of greasy rags, oil filters, air filters, batteries, spent coolant, and degreasers properly.	Every exposed collecting container will be emptied at the end of the day for properly disposal of the collected material at Covered Used Oil Recovery Facility.
Immediately clean up any spillage on dock, boat or ship deck areas and dispose of the waste properly.	Keep oil absorbent pads and pillows available for contractors, staff, and customers to mop up drips and small spills. Inspect monthly stored control materials to confirm availability. Keep material inventory.

E. All Industrial Areas

Table 7: All Industrial Areas Maintenance

Stormwater Management Practice	Maintenance Procedure
Catch basins will be cleaned out from debris.	Catch basins will be cleaned when the depth of debris reaches 60% of the sump depth.
All equipment and vehicles will be inspected for leaking fluids such as oil, antifreeze, etc.	Equipment and vehicles inspections will be held monthly. Leaking equipment and vehicles will be taken out of service or prevent leaks from spilling on the ground until repaired.

4.1.4 Spill Prevention and Response

A Spill Prevention, Control, and Countermeasures (SPCC) Plan for oils and hazardous materials spills has been prepared and implemented for the facility. On-site and on-call trained persons have been designated and are available at all times to promptly and properly implement the plan and immediately cleanup all spills. Suitable cleanup materials, such as dry adsorbent materials, are kept on site to allow prompt cleanup of a spill.

The SPCC Plan includes, among other details, the following Best Management Practices:

A. Prevention
   1. All chemical liquids, fluids, and petroleum products will be labeled and stored on an impervious surface that is surrounded with a containment berm or dike that is capable of containing 10% of the total enclosed tank volume or 110% of the volume contained in the largest tank, whichever is greater.
   2. All containers will be provided with tight-fitting lids.
   3. When performing fuel transfer, the person conducting the activity will be present at the fueling pump.
   4. Shut-off fueling nozzles will not be locked in the open position.
   5. Tanks being refueled will not be “top-off”.
   6. Materials, equipment, and activities will be located so that leaks are contained in existing containment and diversion systems.
   7. Use drip pans and absorbents under or around leaky vehicles and equipment or store indoors where feasible. Drain fluids from equipment and vehicles prior to on-site storage or disposal.

B. Response
  1. Notification procedures to be used in the event of a spill.
  2. Cleanup procedures.
  3. Retain and maintain an appropriate oil spill cleanup kit on-site for rapid cleanup of material spills.
  4. Ensure that an employee trained in spill containment and cleanup is present during loading/unloading.
  5. A summary of the plan will be prepared and posted at appropriate points in the facilities, identifying the spill cleanup coordinators, location of cleanup kits, and phone numbers of regulatory agencies to be contacted in the event of a spill.
  6. Emergency Spill Cleanup Plan will be updated as required.
  7. Emergency spill containment and cleanup kit(s) will be located in high potential spill areas. Refer to **Attachment O.**

4.1.5 Erosion and Sediment Controls

A. Berms, Proper Grading, Silt Fences and Hay Bales have been strategically located around the areas not designated for boat maintenance to contain sediments coming from existing earth roads. See **Attachments J through N**.
B. Vegetative cover, such as grass, trees, and shrubs, are conserved on erodible soil areas.
C. In the event of constructions, a separate SWPPP with controls specifically designed for construction activities and soil disturbance will be prepared and a Notice of Intent for the Construction General Permit (CGP) coverage will be filed.

4.1.6 Management of Runoff

A. A retaining pond and a detention pond are located in the Boatyard area to help control stormwater runoff coming from this area through infiltration.
B. The soils levels have been worked in such a way that they direct the runoff to specific discharge points. This is complemented with the construction of berms avoiding discharges outside the points already established.
C. Catch basin are located at the discharge points for sedimentation.
D. Additional controls are used to sedimentation, such as silt fence, dandy sack and hay bales or tube.
E. Inside the catch basin, booms are located to capture any oil particle.
F. Some discharge points have been provided with metals absorbing materials to add protection to the naturally occurring metals identified in previous discharge monitoring.
G. No additional controls were required for these facilities.

4.1.7 Dust Generation and Vehicle Tracking of Industrial Materials

In the Puerto Del Rey Marina operation, vehicle off-site tracking is almost imperceptible. During extremely dry periods, dust is kept to a minimum by spraying water using water trucks.

4.2 Numeric Effluent Limitations Based on Effluent Limitations Guidelines

Puerto Del Rey Marina does not operate an industrial category subject to one of the effluent limitation's guidelines identified in the 2021 MSGP.

4.3 Water Quality-based Effluent Limitations and Water Quality Standard

No additional controls are necessary as no limitations based on water quality standards are required.

4.4 Sector-Specific Non-Numeric Effluent Limits

All control measures described before will serve as well to comply with Sector Q and R specific requirements for effluent limits.

A. Sector Q and Sector R (2021 MSGP Part 8)
   1. Prohibition of Non- Stormwater Discharge.
      a. The following are not authorized by this permit: discharges from vessels including bilge and ballast water, sanitary wastes, pressure wash water, and cooling water. Any discharge of pollutants from a point source to a water of the U.S. requires coverage under an NPDES permit. (EPA includes these prohibited non-stormwater discharges here solely as a helpful reminder to the operator that only non-stormwater discharges authorized by this permit are at Part 1.2.2)

   2. Good Housekeeping Measures
      a. Pressure Washing Area
         - If pressure washing is used to remove marine growth from vessels, the discharge water must be permitted by a separate NPDES permit. Collect or contain the discharges from the pressure washing area so that they are not commingled with stormwater discharges authorized by this permit.

b. Blasting and Painting Area
   - Minimize the potential for spent abrasives, paint chips, and overspray to be discharged into receiving waters or the storm sewer system. Contain all blasting and painting activities, or use other measures, to minimize the discharge of contaminants (e.g., hanging plastic barriers or tarpaulins during blasting or painting operations to contain debris). At least once per month, you must clean stormwater conveyances of deposits of abrasive blasting debris and paint chips.

c. Material Storage Areas
   - Store and plainly label all containerized materials (e.g., fuels, paints, solvents, waste oil, antifreeze, batteries) in a protected, secure location away from drains. Minimize the contamination of precipitation or stormwater from the storage areas. Specify which materials are stored indoors and contain or enclose or use other measures for those stored outdoors. If abrasive blasting is performed, discuss the storage and disposal of spent abrasive materials generated at the facility. Implement an inventory control plan to limit the presence of potentially hazardous materials onsite.

d. Engine Maintenance and Repair Areas
   - Minimize the contamination of precipitation or stormwater from all areas used for engine maintenance and repair through implementation of control measures such as the following, where determined to be feasible (list not exclusive): performing all maintenance activities indoors; maintaining an organized inventory of materials used in the shop; draining all parts of fluid prior to disposal; prohibiting the practice of hosing down the shop floor; using dry cleanup methods; and treating and/or recycling stormwater collected from the maintenance area.

e. Material Handling Area
   - Minimize the contamination of precipitation or stormwater from material handling operations and areas (e.g., fueling, paint and solvent mixing, disposal of process wastewater streams from vessels) through implementation of control measures such as the following, where determined to be feasible (list not exclusive): covering fueling areas; using spill and overflow protection; mixing paints and solvents in a designated area (preferably indoors or under a shed); and minimizing discharges of stormwater to material handling areas.

f. Drydock Activities
   - Routinely maintain and clean the drydock to minimize discharges of pollutants in stormwater. Address the cleaning of accessible areas of the drydock prior to flooding, and final cleanup following removal of the vessel and raising the dock. Include procedures for cleaning up oil, grease, and fuel spills occurring on the drydock. To minimize discharges of pollutants in stormwater from drydock activities, implement control measures such as the following, where determined to be feasible (list not exclusive): sweeping rather than hosing off debris and spent blasting material from accessible areas of the drydock prior to flooding; and making absorbent materials and oil containment booms readily available to clean up or contain any spills.

3. Employee Training
   a. As part of your employee training program, address, at a minimum, the following activities (as applicable): used oil management; spent solvent management, disposal of spent abrasives, disposal of vessel wastewaters, spill prevention and control, fueling procedures, general good housekeeping practices, painting and blasting procedures, and used battery management.

4. Preventive Maintenance
   a. As part of your preventive maintenance program timely inspection and maintenance of stormwater management devices (e.g., cleaning oil and water separators and sediment traps to ensure that spent abrasives, paint chips, and solids will be intercepted and retained prior to entering the storm drainage system), as well as inspecting and testing facility equipment and systems to uncover conditions that could cause breakdowns or failures resulting in discharges of pollutants to surface waters.

5. Drainage Area Site Map
   a. Document in your SWPPP where any of the following may be exposed to precipitation or stormwater: fueling, engine maintenance and repair, vessel maintenance and repair, pressure washing, painting, sanding, blasting, welding, metal fabrication, loading and unloading areas, locations used for the treatment, storage, or disposal of wastes, liquid storage tanks, liquid storage areas (e.g., paints, solvents, resins), and material storage areas (e.g., blasting media, aluminum, steel, scrap iron).

5 Schedule and Procedures for Inspection and Monitoring

Inspection and maintenance of the control measures and the areas with sources of pollutants are as important to pollution prevention as the proper planning and design. The inspector should note any damage or deficiencies in the control measures in an inspection report. It must be corrected damage or deficiencies as soon as practicable after the inspection and any changes that may be required to correct deficiencies in the Storm Water Pollution Prevention Plan should be made as soon as practicable after the inspection.

5.1 Good Housekeeping

Table 8: Good Housekeeping Schedules and Procedures

Activity	Description	Frequency
Contaminated material disposal	Dispose of greasy rags, oil filters, air filters, batteries, spent coolant, and degreasers properly.	Monthly
Provide oil absorbent pads and pillows.	Keep track of material consumption and availability	N/A
Pickup and disposal of waste materials	Waste and Trash pickup and disposal by a private company	Weekly
Clean up to remove accumulated pollutants over paved surfaces in the industrial areas	Collect and properly dispose debris and sediments accumulated in the paved areas.	As Required
Yard maintenance and cleanup of scrap materials	Pickup scrap materials from designated areas.	Weekly
Pick up recyclable material	Pickup recyclables from designated areas.	Weekly
Clean regularly all accessible work, service and storage areas to remove debris, spent sandblasting material, and any other potential stormwater pollutants	Contractor Facilities Maintenance performed by Contractors.	Monthly
Collect spent abrasives regularly and store under cover to await proper disposal.	Contractor Facilities Maintenance performed by Contractors.	Monthly

Table 8: Good Housekeeping Schedules and Procedures		
Activity	**Description**	**Frequency**
Sprinkle or wet down soil with water to minimize airborne dust as long as it does not result in a wastewater discharge.	Use a water truck to keep dirt roads moist to prevent fugitive dust during extremely dry seasons.	As Required
Clean up sediment from catch basins.	Remove debris from catch basing and dispose of it properly.	Quarterly
Drain dumpsters and/or dumpster pads to sanitary sewer.	Clean dumpster pads from leachate and trash residues.	Monthly
Silt fences and hay bales.	Clean and properly dispose of sediments collected at the controls.	As Required
Sump Pits Maintenance	Clean up from sediments.	Weekly
Oil Recovery Facility Maintenance	Empty the oil recovery dike and drums.	Daily
Catchbasin with MetalZorb®	Empty the strainer to remove trash residues.	Weekly

5.2 Maintenance

Table 9: Maintenance Schedules and Procedures		
Activity	**Description**	**Frequency**
Inspect fuel transfer equipment, such as hoses and pipes.	Check for leaks.	Monthly
Inspections for leaks and of the condition of drums, tanks and containers.	Check for leaks.	Monthly
Sprinkle or wet down soil with water to minimize airborne dust as long as it does not result in a wastewater discharge.	Keep water truck available with water during dry seasons.	As Required
Drain dumpsters and/or dumpster pads to sanitary sewer.	Check for dumpster and dumpster pads conditions.	Monthly
Silt fences and hay bales	Change controls every 6 months or after inspection reports recommendation	Bi-annual

Table 9: Maintenance Schedules and Procedures		
Activity	**Description**	**Frequency**
Sanitary pumps	Check for components and leaks.	Monthly
Sump Pits Maintenance	Check for components operation and leaks.	Weekly
Oil Recovery Facility Maintenance	Check for components and leaks.	Quarterly
Vehicle and Inspection	Check for vehicles and equipment conditions and leaks.	Monthly
Catchbasin with MetalZorb®	Change controls every 6 months or after inspection reports recommendation	Bi-annual

5.3 Spill Prevention and Response Procedures

For preventing and responding to spills and leaks, including notification procedures, Puerto Del Rey Marina has developed and implemented a Spill Prevention, Control, and Countermeasures Plan (SPCCP) to define control measures for material handling and storage, and the procedures for preventing spills that can contaminate stormwater.

5.4 Erosion and Sedimentation Control

No polymers or chemicals treatments are used for erosion and sediment control. **Attachment J through N** illustrate the Erosion and Sedimentation Controls.

5.5 Employee Training

5.5.1 Trainings

A. General Components and Goals of the Storm Water Pollution Prevention Plan
B. Spill Prevention and Response
C. Good Housekeeping
    1. Facilities Maintenance

D. Proper Painting and Blasting Procedures
E. Proper Boat Washing Procedures
F. Proper Material Handling and Storage
    1. Chemicals
    2. Fluids (Other than Oils and Fuels)
G. Disposal and Control of Wastes

1. Trash
2. Fish Wastes
3. Recyclables
4. Used Oil
5. Spent Abrasives
6. Vessel Wastewater
7. Used Batteries

H. Fueling Operations and Procedures
I. Equipment and Vehicles Maintenance
J. Sediment Controls and Maintenance
K. Monitoring and Inspections Procedures

Table 10: Employee Trainings and Schedules

Training Name	Training Content	Frequency/ Schedule	Personnel Receiving the Training
SWPPP Goals	General Components and Purposes of a Storm Water Pollution Prevention Plan	Annually	SWPPP Team
			Fuel Dock Employees
			Equipment Operators
			Independent Contractors
			Equipment Maintenance Personnel
			Boat Owners (Voluntarily)
			Fishermen (Voluntarily)
SPCC	Spill Prevention, Control and Countermeasures Plan	Bi-Annual	SWPPP Team
			Facilities Maintenance Personnel
			Fuel Dock Employees
			Equipment Operators
			Independent Contractors
			Equipment Maintenance Personnel
			Boat Owners (Voluntarily)
			Fishermen (Voluntarily)
Facilities Maintenance	Good Housekeeping procedures	Annually	SWPPP Team
			Facilities Maintenance Personnel
			Independent Contractors
			Equipment Maintenance Personnel
Boat Maintenance	Painting and Blasting	Bi-Annual	SWPPP Team
			Independent Contractors

Table 10: Employee Trainings and Schedules

Training Name	Training Content	Frequency/ Schedule	Personnel Receiving the Training
	Procedures. Boats Mechanical Works		Equipment Maintenance Personnel
Boat Washing	Boat Washing Procedures	Annually	SWPPP Team Independent Contractors Boat Owners (Voluntarily)
Materials	Proper Handling and Storage of Potential Contaminants (Other than oils and fuels)	Bi-Annual	SWPPP Team Facilities Maintenance Personnel Independent Contractors Equipment Maintenance Personnel
Waste Management	Disposal and Control of Wastes	Annually	SWPPP Team Facilities Maintenance Personnel Independent Contractors
Fueling	Fueling Operations and Procedures	Bi-Annual	SWPPP Team Fuel Dock Employees Facilities Maintenance Personnel Independent Contractors Boat Owners (Voluntarily)
Equipment Maintenance	Equipment and Vehicles Maintenance	Bi-Annual	SWPPP Team Facilities Maintenance Personnel Equipment Maintenance Personnel Independent Contractors
Sedimentation and Erosion	Sediment Controls and Maintenance	Bi-Annual	SWPPP Team Facilities Maintenance Personnel
Monitoring	Monitoring and Inspections Procedures	Quarterly	SWPPP Team

Attachment P includes the Employee Training Recordkeeping Template to be utilized for Puerto del Rey Marina.

5.6 Inspections and Assessments

All employees who work in areas where industrial materials or activities are exposed to stormwater, or who are responsible for implementing activities, including all members of your stormwater pollution prevention team, must be trained.

5.6.1 Routine Facility Inspections

The inspection team will walk the entire Industrial Site with a copy of the site plan where all of the stormwater control measures and areas to be inspected are identified. A brief description of the control measures and areas that were inspected will be listed in the site-specific section of the inspection report.

Areas of industrial materials or activities exposed to stormwater will also be addressed during the inspection. Required corrective actions will be noted with the date and responsible person for the correction.

Inspections will be conducted at least quarterly as described in the schedule included in this document. Also, at least one of the routine inspections will be conducted during a period when a stormwater discharge is occurring.

A. Person(s) or positions of person(s) responsible for inspection.

  1. Primary: Consultant – EHA Engineering, PCS

B. Schedules for conducting inspections.

Table 11: Inspections Schedules

Inspection Location	Planned Schedule
Dry Dock	Monthly
Varadero	Monthly
Fuel Dock Area	Monthly
Fishermen Dock	Monthly
Boatyard	Monthly

C. Areas where industrial materials or activities are exposed to stormwater.

Refer to **Table 2** and **Attachment F**

D. Areas identified in the SWPPP and any others that are potential pollutant sources.

Refer to **Table 2** and **Attachment F**

E. Areas where spills and leaks have occurred in the past 3 years.

Puerto Del Rey Marina has no record of reportable spills at the facilities.

F. Inspection information for discharge points.

Table 12: Outfall Locations

Outfall Name	Discharge Point ID	Coordinates	
		NORTH	EAST
DD-2	002	18.2850	65.6351
DD-3	003	18.2848	65.6361
DD-4	004	18.2847	65.6368
DD-5	005	18.2846	65.6369
VA-1	006	18.2847	65.6348
VA-2	007	18.2846	65.6345
VA-3	008	18.2846	65.6341
VA-5A	029	18.2843	65.6331
VA-6	011	18.2841	65.6339
VA-7	012	18.2841	65.6343
VA-8	013	18.2841	65.6345
VA-9	014	18.2843	65.6351
FD-3A	030	18.2850	65.6328
BY-1	019	18.2844	65.6380
BY-2	020	18.2842	65.6378
BY-3	021	18.2842	65.6373
BY-4	022	18.2843	65.6370
BY-5	023	18.2832	65.6365
BY-6	024	18.2836	65.6365
BY-7	025	18.2840	65.6364
BY-8	(Approximate Centroid) 026	18.2822	65.6366
TC-1	(Approximate Centroid) 027	18.2799	65.6368

Table 12: Outfall Locations			
Outfall Name	**Discharge Point ID**	**Coordinates**	
		NORTH	**EAST**
TC-2	(Approximate Centroid) 028	18.2785	65.6382

G. Control measures used to comply with the effluent limits contained in this permit.

No effluent limits are required for this facility.

5.6.2 Quarterly Visual Assessment of Stormwater Discharges

A. Person(s) or positions of person(s) responsible for assessments.

1. Primary: Consultant – EHA Engineering, PCS

B. Schedules for conducting assessments.

Table 13: Quarterly Visual Assessment Schedules	
Outfall Name	**Planned Schedule**
DD-2, DD-3, DD-4 & DD-5	Jul-Sept, Oct-Dec, Jan-Mar and Apr-Jun
VA-1, VA-2, VA-3, VA-5A, VA-6, VA-7, VA-8 & VA-9	Jul-Sept, Oct-Dec, Jan-Mar and Apr-Jun
FD-3A	Jul-Sept, Oct-Dec, Jan-Mar and Apr-Jun
BY-1, BY-2, BY-3, BY-4, BY-5, BY-6, BY-7 & BY-8	Jul-Sept, Oct-Dec, Jan-Mar and Apr-Jun
TC-1 & TC-2	Jul-Sept, Oct-Dec, Jan-Mar and Apr-Jun

C. Specific Assessment Activities

1. The visual assessment will be made:

   a. Of a discharge sample contained in a clean, colorless glass or plastic container, and examined in a well-lit area;
   b. On samples collected within the first 30 minutes of an actual discharge from a storm event. If it is not possible to collect the sample within the first 30 minutes of discharge, the sample must be collected as soon as practicable after the first 30 minutes and you must document why it was not possible to take the sample within the first 30 minutes; and

c. For storm events, on discharges that occur at least 72 hours (3 days) from the previous discharge. The 72-hour (3-day) storm interval does not apply if you document that less than a 72-hour (3-day) interval is representative for local storm events during the sampling period.

2. The monitoring and inspection personnel will visually inspect or observe the sample for the following water quality characteristics:

a. Color;
b. Odor;
c. Clarity (diminished);
d. Floating solids;
e. Settled solids;
f. Suspended solids;
g. Foam;
h. Oil sheen; and
i. Other obvious indicators of stormwater pollution.

5.6.3 Exception to Routine Facility Inspections and Quarterly Visual Assessments for Inactive and Unstaffed Sites.

This exception does not apply to Puerto del Rey Marina.

5.7 Monitoring

5.7.1 Indicator Monitoring

Table 14: Indicator Monitoring Schedules

Sample Location	Monitoring Schedules	Indicator to Be Sampled
DD-2, VA-1, VA-2, VA-3, VA-5A, VA-6, VA-7, VA-8, FD-3A, DD-3, DD-4, DD-5, VA-9, BY-1, BY-2, BY-3, BY-4, BY-5, BY-6, BY-7, BY-8, TC-1 & TC-2	Jul-Sept and Jan-Mar	PAHs*
DD-2, VA-1, VA-2, VA-3, VA-5A, VA-6, VA-7, VA-8, FD-3A, DD-3, DD-4, DD-5, VA-9, BY-1, BY-2, BY-3, BY-4, BY-5, BY-6, BY-7, BY-8, TC-1 & TC-2	Jul-Sept, Oct-Dec, Jan-Mar and Apr-Jun	pH**
		TSS**
		COD**

*Monitoring is required for the 16 individual PAHs identified at Appendix A to 40 CFR Part 423 (also specified in the sector-specific requirements in 2021 MSGP Part 8). **See 2021 MSGP Part 4.2.1.1.

5.7.2 Sector-Specific Benchmarks

Stormwater samples will be collected, analyzed, and documented consistent with the procedures described in 2021 MSGP in accordance with the relevant sampling and analysis requirements at 40 CFR Part 136. Refer to **Attachment O and S**.

A. Quarterly Benchmark Monitoring for Caribbean Sea

Table 15: Quarterly Benchmark Monitoring Schedules Receiving Waters – Caribbean Sea			
Sample Location *(Substantially Identical)	**Monitoring Schedules**	**Pollutant to Be Sampled**	**Benchmark Monitoring Concentration**
DD-2	Jul-Sept, Oct-Dec, Jan-Mar and Apr-Jun	Total Aluminum	1,100 µg/L
		Total Lead	210 µg/L
		Total Zinc	90 µg/L
VA-1, VA-2, VA-3, VA-5A, VA-6, VA-7 & VA-8	Jul-Sept, Oct-Dec, Jan-Mar and Apr-Jun	Total Aluminum	1,100 µg/L
		Total Lead	210 µg/L
		Total Zinc	90 µg/L
FD-3A	Jul-Sept, Oct-Dec, Jan-Mar and Apr-Jun	Total Aluminum	1,100 µg/L
		Total Lead	210 µg/L
		Total Zinc	90 µg/L

* Substantially Identical Discharge Points. **Refer Table 17.**

B. Quarterly Benchmark Monitoring for Demajagua River Estuary

To establish the benchmark of the lead and zinc in fresh water, the method (i) contained in Appendix J of MSGP 2021 was used. This method involves collecting samples in the receiving water and submitting these to a laboratory for analysis. If you elect to sample your receiving water(s) and submit samples for analysis, hardness must be determined from the closest intermittent or perennial stream downstream of your point of discharge. The sample can be collected during either dry or wet weather. Collection of the sample during wet weather is more representative of conditions during stormwater discharges; however, collection of in-stream samples during wet weather events may be impracticable or present safety issues.

Table 16: Quarterly Benchmark Monitoring Schedules
Receiving Waters – Demajagua River Estuary

Sample Location (Substantially Identical)	Monitoring Schedules	Pollutant to Be Sampled	Benchmark Monitoring Concentration
TC-1 & TC-2	Jul-Sept, Oct-Dec, Jan-Mar and Apr-Jun	Total Aluminum	1,100 µg/L
		Total Lead	262 µg/L
		Total Zinc	260 µg/L
DD-3, DD-4 & DD-5	Jul-Sept, Oct-Dec, Jan-Mar and Apr-Jun	Total Aluminum	1,100 µg/L
		Total Lead	69 µg/L
		Total Zinc	107 µg/L
VA-9	Jul-Sept, Oct-Dec, Jan-Mar and Apr-Jun	Total Aluminum	1,100 µg/L
		Total Lead	69 µg/L
		Total Zinc	107 µg/L
BY-1, BY-2, BY-3, BY-4, BY-5, BY-6, BY-7, BY-8	Jul-Sept, Oct-Dec, Jan-Mar and Apr-Jun	Total Aluminum	1,100 µg/L
		Total Lead	69 µg/L
		Total Zinc	107 µg/L

* Substantially Identical Discharge Points. **Refer Table 17.**

C. Impaired Waters Monitoring

According to the Puerto Rico 2020 303(d) list, **Attachment T**, the Caribbean Sea Coastline and Rio Demajagua are identified as impaired water. Additionally, Rio Demajagua has an established TMDL from September 2011 for the pollutant Fecal Coliform.

Table 17: Impaired Waters Monitoring Schedules		
Sample Location	**Monitoring Schedules**	**Pollutant to Be Sampled**
DD-2, VA-1, VA-2, VA-3, VA-5A, VA-6, VA-7, VA-8, FD-3A	Jul-Sept	Copper
		Thallium
		Dissolved Oxygen
		Enterococci
		Temperature
		Turbidity
DD-3, DD-4, DD-5, VA-9, BY-1, BY-2, BY-3, BY-4, BY-5, BY-6, BY-7 & BY-8	Jul-Sept	Fecal Coliform (TMDL)
		Turbidity
		Dissolved Oxygen

5.7.3 Substantially identical discharge point (outfall) exception:

- List the location of each discharge point: **Refer to Table 11.**
- List the general industrial activities conducted in the drainage area of each discharge point: **Refer to Table 2**.
- List the control measures implemented in the drainage area of each discharge point and Substantially Identical Discharge Points:

Table 18: Substantially identical discharge point (outfall) exception			
Outfall Name	**Control Measures**	**Runoff Coefficient ****	**Substantially Identical Discharge Points (SIDP)**
DD-2	Haul Out Ramp – No controls available	Low	N/A
DD-3	Filtering media and dandy sack installed in inlets, absorbent materials in catch basins and collecting pit with pump to divert water to holding tanks.	High	DD-4, DD-5
DD-4	Berms, silt fences and hay bales.	High	DD-3, DD-5
DD-5	Berms, silt fences and hay bales.	High	DD-3, DD-4

Table 18: Substantially identical discharge point (outfall) exception

Outfall Name	Control Measures	Runoff Coefficient **	Substantially Identical Discharge Points (SIDP)
FD-3A	Berms, hay bales or tube, 3 stage catch basin, dandy sack and absorbents material	High	N/A
VA-1	Berms, hay bales or tube	Low	VA-2, VA-3, VA-5A, VA-6, VA-7, VA-8
VA-2	Berms, hay bales or tube, catch basin and absorbent materials	Medium	VA-1, VA-3, VA-5A, VA-6, VA-7, VA-8
VA-3	Berms, hay bales or tube, catch basin and absorbent materials	Low	VA-1, VA-2, VA-5A, VA-6, VA-7, VA-8
VA-5A	Berms, silt fence, 3 stage catch basin, dandy sack and absorbents material	Medium	VA-1, VA-2, VA-3, VA-6, VA-7, VA-8
VA-6	Berms, hay bales or tube, catch basin and absorbent materials	Low	VA-1, VA-2, VA-3, VA-5A, VA-7, VA-8
VA-7	Berms, hay bales or tube, catch basin and absorbent materials	Low	VA-1, VA-2, VA-3, VA-5A, VA-6, VA-8
VA-8	Berms, hay bales or tube, catch basin and absorbent materials	Medium	VA-1, VA-2, VA-3, VA-5A, VA-6, VA-7
VA-9	Hay bales or tube and catch basin	Medium	N/A
BY-1	Detention pond, 2 stage catch basin, absorbent material	High	BY-2, BY-3, BY-4, BY-5, BY-6, BY-7, BY-8
BY-2	Berms, silt fences, catch basin and hay bales	Medium	BY-1, BY-3, BY-4, BY-5, BY-6, BY-7, BY-8
BY-3	Berms, silt fences, catch basin and hay bales	Medium	BY-1, BY-2, BY-4, BY-5, BY-6, BY-7, BY-8
BY-4	Berms, silt fences, catch basin and hay bales	Medium	BY-1, BY-2, BY-3, BY-5, BY-6, BY-7, BY-8

Table 18: Substantially identical discharge point (outfall) exception

Outfall Name	Control Measures	Runoff Coefficient **	Substantially Identical Discharge Points (SIDP)
BY-5	Retention pond, absorbent material	High	BY-1, BY-2, BY-3, BY-4, BY-6, BY-7, BY-8
BY-6	Berms, catch basin, absorbent material	Medium	BY-1, BY-2, BY-3, BY-4, BY-5, BY-7, BY-8
BY-7	Berms, silt fence, catch basin and absorbent material	Medium	BY-1, BY-2, BY-3, BY-4, BY-5, BY-6, BY-8
BY-8	Silt fence	Medium	BY-1, BY-2, BY-3, BY-4, BY-5, BY-6, BY-7,

** An estimate of the runoff coefficient of the drainage areas (low=under 40%; medium=40 to 65%; high =above 65%)

- List the exposed materials located in the drainage area of each discharge point that are likely to be significant contributors of pollutants to stormwater discharges: No exposed materials will be located in the facilities.
- The designation of discharge points having substantially identical effluents was based on having the same significant industrial materials and processes in the drainage areas for each discharge point.

6 Documentation to Support Eligibility Pertaining to Other Federal Laws

6.1 Documentation Regarding Endangered Species.

Consultation between the US Corps of Engineers and the U.S. Fish and Wildlife Service and the National Marine Fisheries Service under section 7 of the Endangered Species Act (ESA) has been concluded. A formal consultation had occurred as a result of a separate federal action during application for a Maintenance Nationwide Permit for the facilities and a maintenance dredge permit for the Marina channels. This consultation has addressed the effects of the industrial activities discharges and discharge-related activities on all federally listed threatened or endangered species and federally designated critical habitat.

Attachment R includes the Consultation between the US Corps of Engineers and the U.S. Fish and Wildlife Service and the National Marine Fisheries Service and a letter from the Fish and Wildlife Service certifying the location of the facility and the nature of the permit qualification under Criterion C for Federally-listed threatened or endangered species.

6.2 Documentation Regarding Historic Properties.

The stormwater discharges and allowable non-stormwater discharges do not have the potential to have an effect on historic properties in the facilities.

The discharge-related activities such as the installation of stormwater control measures do not involve subsurface disturbance that could affect historic properties.

7 Corrective Actions and Additional Implementation Measures (AIM)

7.1 Conditions Required SWPPP Review and Revision to Ensure Effluent Limits are Met

When any of the following conditions occur or are detected, Puerto del Rey Marina must review, revise and/or modify the SWPPP.

7.1.1 Conditions

A. An authorized release or discharge occurs at the facility
B. A discharge violates a numeric effluent limit listed in Part 8 sector-specific requirements.
C. The stormwater control measures are not stringent enough for the stormwater discharge.
D. A required control measure was never installed, was installed incorrectly or not being properly operated or maintained.
E. Whenever a visual assessment shows evidence of stormwater pollution.
F. If construction or a change in design, operation, or maintenance at the facility occurs, Puerto del Rey Marina must be reviewing the SWPPP.

7.2 Deadline of Correction Action

Puerto del Rey Marina must review & revise SWPPP, take immediate action until you can implement a permanent solution, take additional action within 14 days.

7.3 Additional Implementation Measures (AIM) for benchmark exceedances

7.3.1 Three AIM levels

If any of these conditions occur,

A. The 4-quarter average for a parameter exceeds the benchmark threshold,

B. Fewer than 4 quarterly samples are collected, but a single sample or the sum of any sample results within the sampling year exceeds the benchmark threshold by more than 4 times for a parameter.

Use the following levels:

a. AIM Level 1
    i. While in base line status, a triggering event (exceedance) occurs, it is necessary to review SWPPP or/and Control Measures, implement additional measures if necessary and continue monitoring until no exceedance.
b. AIM Level 2
    i. While in level 1, a triggering event (exceedance) occurs, it is necessary to implement additional pollution prevention, good housekeeping measures and then, continue monitoring until no exceedance.
c. AIM Level 3
    i. While in Level 2, a triggering event (exceedance) occurs, it is necessary to install permanent structural source and treatment controls or consider infiltration and continue monitoring until no exceedance.

Table 19: Additional Implementation Measures (AIM) for benchmark exceedances

Level	Trigger	Response	Deadline
The facility start at baseline status			
1	In baseline and annual average is exceeded (or fewer than 4 samples but exceedance is certain)	• Review SWPPP / Stormwater Control Measures, if necessary • Continue monitoring • If it complies, start at baseline status	• Between 2 and 8 weeks
2	In Level 1 and annual average is exceeded (or fewer than 4 samples but exceedance is certain)	• Implement pollution prevention and/or good housekeeping measures • Continue monitoring • If it complies, start at baseline status	• Between 2 and 8 weeks
3	In Level 2 and annual average is exceeded (or fewer than 4 samples but exceedance is certain)	• Install permanent controls • Continue monitoring • If it complies, start at baseline status	• Between 2 and 12 weeks

8 SWPPP Certification

8.1 SWPPP Consultant Certification

I certify under penalty of law that this document and all attachments were prepared under my direction or supervision in accordance with a system designed to assure that qualified personnel properly gathered and evaluated the information contained therein. Based on my inquiry of the person or persons who manage the system, or those persons directly responsible for gathering the information, the information submitted is, to the best of my knowledge and belief, true, accurate and complete. I am aware that there are significant penalties for submitting false information, including the possibility of fine and imprisonment for knowing violations.

Name: Edgardo Hernández Alvarado, PE Title: Consultant

Signature: Date: May 27, 2021

8.2 SWPPP Owner Certification

I certify under penalty of law that this document and all attachments were prepared under my direction or supervision in accordance with a system designed to assure that qualified personnel properly gathered and evaluated the information contained therein. Based on my inquiry of the person or persons who manage the system, or those persons directly responsible for gathering the information, the information submitted is, to the best of my knowledge and belief, true, accurate and complete. I am aware that there are significant penalties for submitting false information, including the possibility of fine and imprisonment for knowing violations.

Name: Carolina Corral, ESQ Title: Chief Executive Officer

Signature: Date: May 27, 2021

9 SWPPP Modifications

Use this space to incorporated modifications as required in the permit.

Attachment A: General Location Map – Industrial Operations

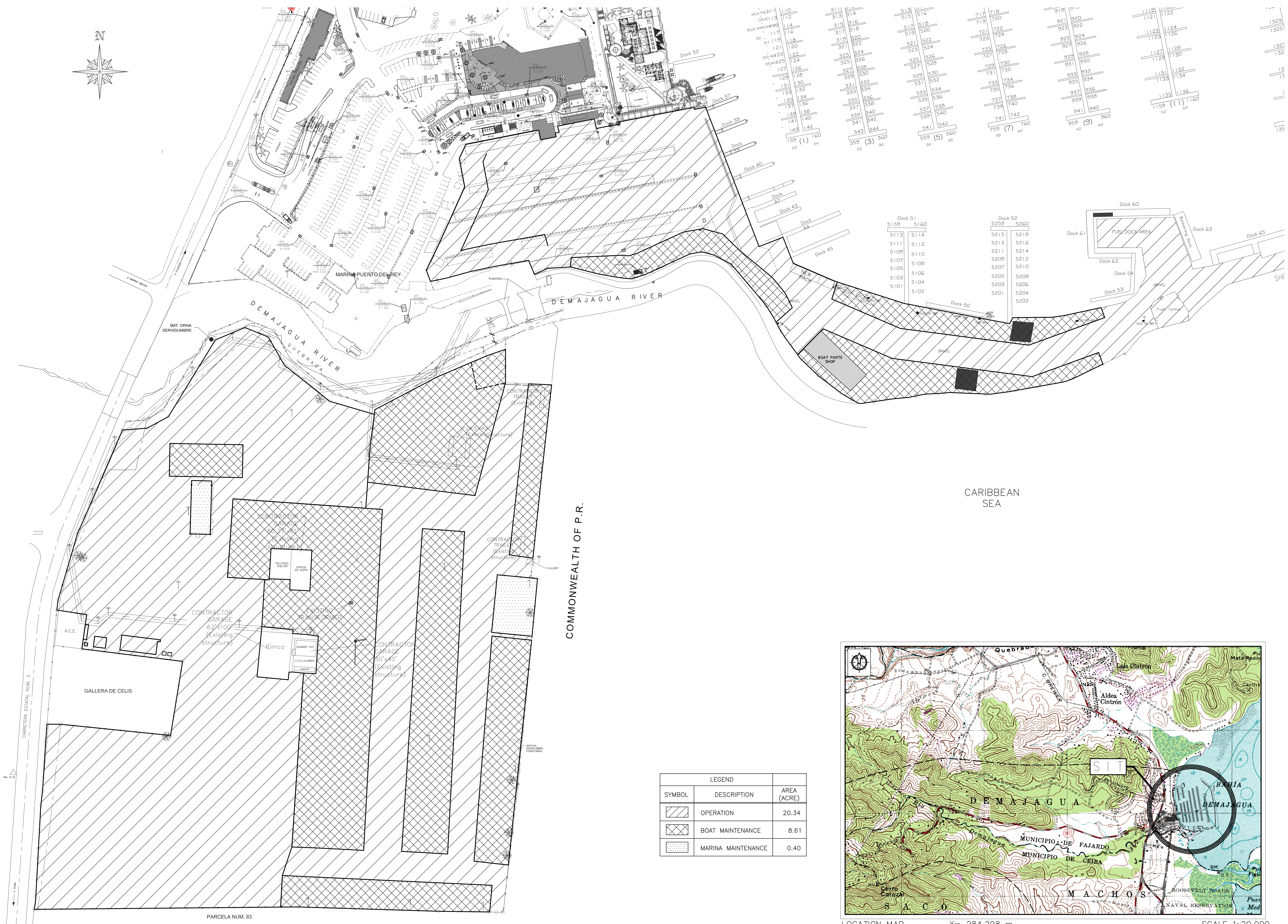

LOCATION MAP X= 284,298 m
Y= 250,194 m
SCALE 1:20.000

LEGEND		
SYMBOL	DESCRIPTION	AREA (ACRE)
▨	OPERATION	20.34
▩	BOAT MAINTENANCE	8.61
░	MARINA MAINTENANCE	0.40

EHA
ENGINEERING, PSC

OWNER / DEVELOPER

LOGO

PUERTO DEL REY

NO.	DESCRIPTION	DATE
	REVISION	05/11/21

CONSULTANTS

Nota Importante:
Yo, Edgardo Hernández Alvarado, ingeniero con licencia número 13930, certifico que soy el profesional que diseñó estos planos y las especificaciones complementarias. También certifico que entiendo que dichos planos y especificaciones cumplen con las disposiciones aplicables del Reglamento Conjunto y las disposiciones aplicables de los Reglamentos y Códigos de las Agencias, Juntas Reglamentadoras o Corporaciones Públicas con jurisdicción. Reconozco que cualquier declaración falsa o falsificación de los hechos que se haya producido sin conocimiento o por negligencia ya sea por mí, mis agentes o empleados, o por otras personas con mi conocimiento, me hacen responsable de cualquier acción judicial y disciplinaria por la OGPe.

PROJECT NAME / NUMBER

MARINA
PUERTO DEL REY
STATE ROAD P.R. - 3
FAJARDO - P.R.

PROJECT NO.

TITLE

MARINA INDUSTRIAL OPERATIONS

FILE TITLE:
DRAWN BY:
REVISED BY: EHA
PLOT SCALE: 1:1,000
DATE: JULY 2015

DRAWING NO.
EC-1

SHEET 01 OF 15

SEAL

ATTACHMENT A

Attachment B: Drainage Area - 1

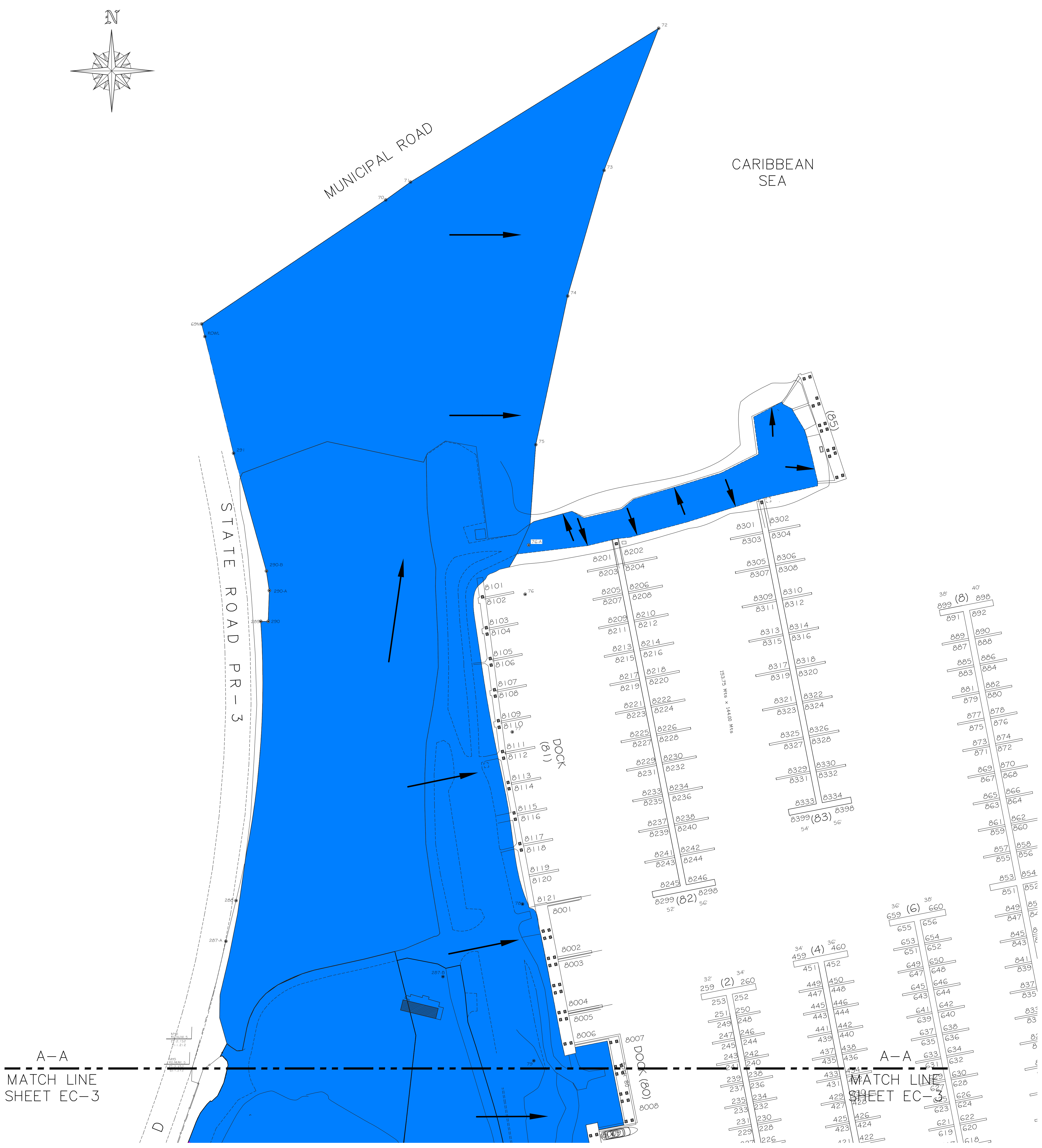

LEGEND		
SYMBOL	AREA (ACRE)	AREA (MC)
🟧 ①	3.03	12,260.85
🟧 ②	0.55	2,225.77
🟧 ③	0.76	3,075.60
🟪	4.48	18,155.01
🟦	15.09	61,074.05
🟥	2.03	8,239.46
🟦	0.43	1,746.33
🟫	1.44	5,847.08
🟪	0.66	2,657.85
🟩	2.02	8,178.90
🟧	0.72	2,941.45
🟫	0.16	655.64
⬜	4.17	19,120.29
🟦	14.81	57,707.39
🟨	1.81	7,318.46
🟩	1.30	5,270.68
⬛	11.44	46,336.38

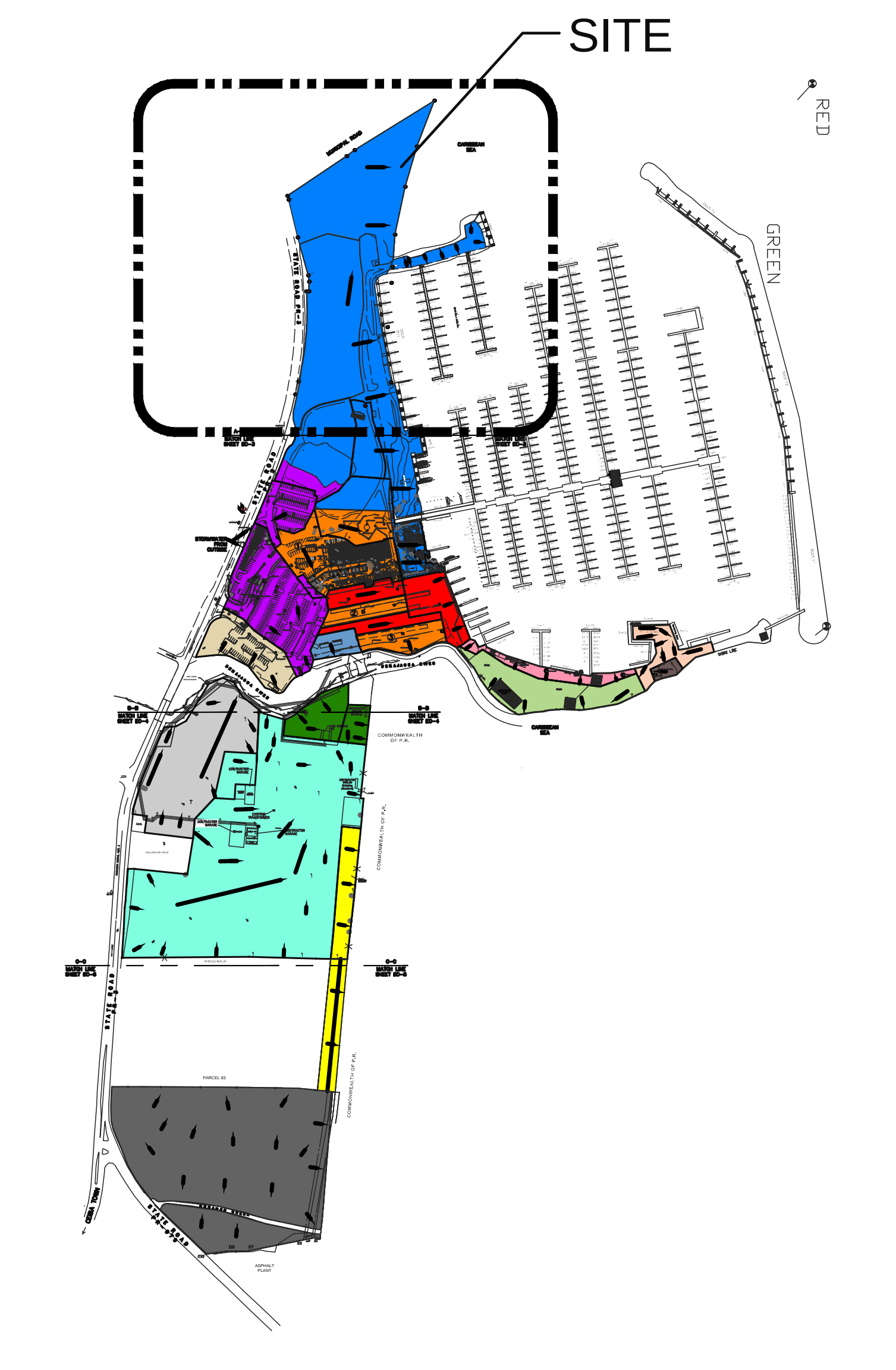

KEY MAP

EHA
ENGINEERING, PSC

OWNER / DEVELOPER

LOGO

PUERTO DEL REY

NO.	DESCRIPTION	DATE
	REVISION	05/07/2

CONSULTANTS

Nota Importante:

Yo, Edgardo Hernández Alvarado, ingeniero con licencia número 13930, certifico que soy el profesional que diseñó estos planos y las especificaciones complementarias.
También certifico que entiendo que dichos planos y especificaciones cumplen con las disposiciones aplicables del Reglamento Conjunto y las dispociciones aplicablels de los Reglamentos y Códigos de las Agencias, Juntas Reglamentadoras o Corporaciones Públicas con jurisdicción. Reconozco que cualquier declaración falsa o falsificación de los hechos que se haya producido sin conocimiento o por negligencia ya sea por mí, mis agentes o empleados, o por otras personas con mi conocimiento, me hacen responsable de cualquier acción judicial y disciplinaria por la OGPe.

PROJECT NAME / NUMBER

MARINA
PUERTO DEL REY
STATE ROAD P.R. - 3
FAJARDO - P.R.

PROJECT NO.

TITLE

APPROXIMATE MARINA
DRAINAGE AREAS

FILE TITLE:
DRAWN BY:
REVISED BY: EHA
PLOT SCALE: 1:1,000
DATE: JULY 2015

DRAWING NO.
EC-2

SHEET 02 OF 15

SEAL

ATTACHMENT B

Attachment C: Drainage Area - 2

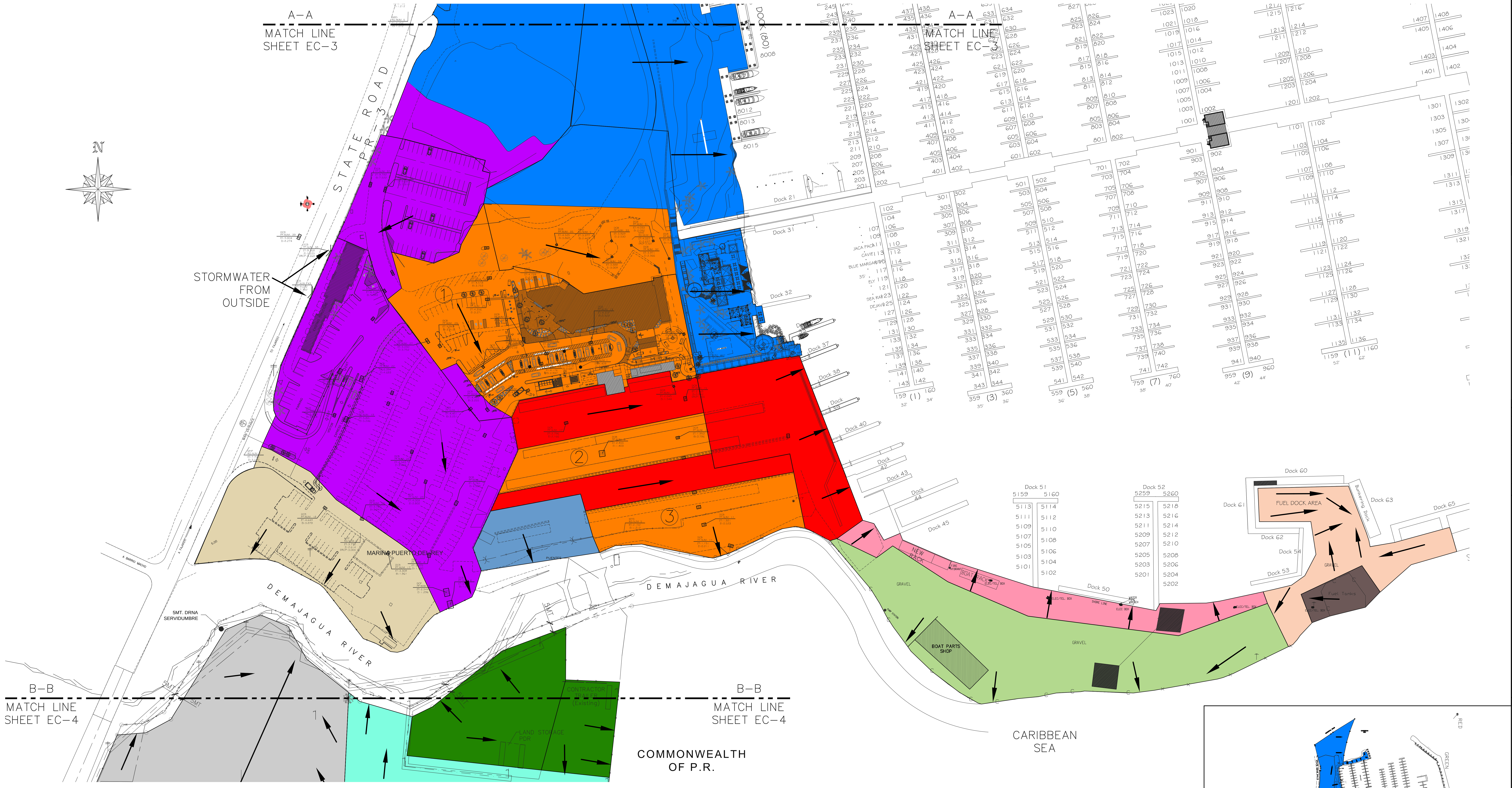

LEGEND		
SYMBOL	AREA (ACRE)	AREA (MC)
🟧 ①	3.03	12,260.85
🟧 ②	0.55	2,225.77
🟧 ③	0.76	3,075.60
🟪	4.48	18,155.01
🟦	15.09	61,074.05
🟥	2.03	8,239.46
🟦	0.43	1,746.33
🟫	1.44	5,847.08
🟥	0.66	2,657.85
🟩	2.02	8,178.90
🟧	0.72	2,941.45
🟫	0.16	655.64
⬜	4.17	19,120.29
🟩	14.81	57,707.39
🟨	1.81	7,318.46
🟩	1.30	5,270.68
⬛	11.44	46,336.38

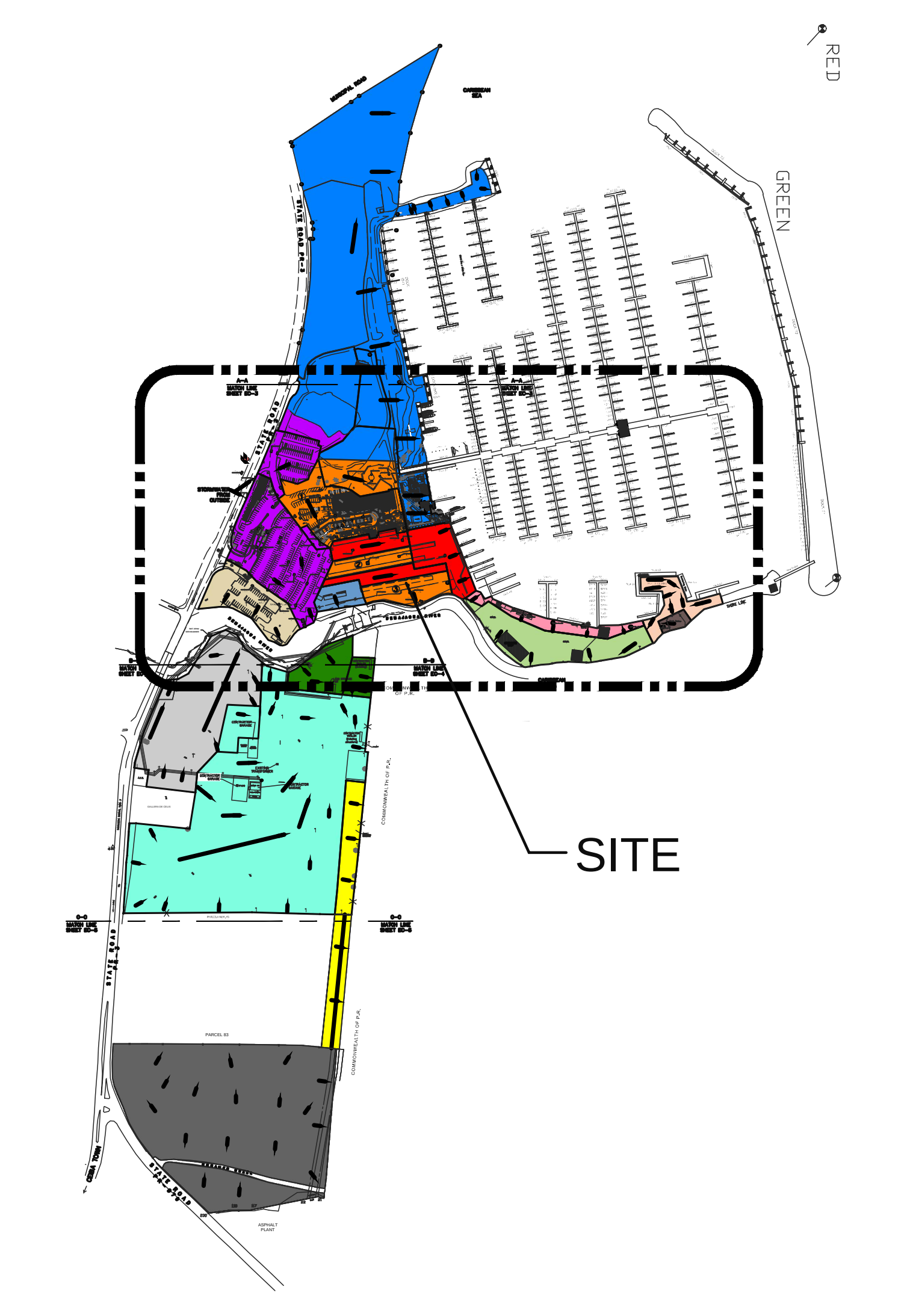

KEY MAP

EHA ENGINEERING, PSC

OWNER / DEVELOPER

LOGO

PUERTO DEL REY

NO.	DESCRIPTION	DATE
	REVISION	05/07/21

CONSULTANTS

Nota Importante:

Yo, Edgardo Hernández Alvarado, ingeniero con licencia número 13930, certifico que soy el profesional que diseñó estos planos y las especificaciones complementarias.
También certifico que entiendo que dichos planos y especificaciones cumplen con las disposiciones aplicables del Reglamento Conjunto y las dispociciones aplicablels de los Reglamentos y Códigos de las Agencias, Juntas Reglamentadoras o Corporaciones Públicas con jurisdicción. Reconozco que cualquier declaración falsa o falsificación de los hechos que se haya producido sin conocimiento o por negligencia ya sea por mí, mis agentes o empleados, o por otras personas con mi conocimiento, me hacen responsable de cualquier acción judicial y disciplinaria por la OGPe.

PROJECT NAME / NUMBER

MARINA
PUERTO DEL REY
STATE ROAD P.R. - 3
FAJARDO - P.R.

PROJECT NO.

TITLE

APPROXIMATE MARINA DRAINAGE AREAS

FILE TITLE:
DRAWN BY:
REVISED BY:
PLOT SCALE: 1:1,000
DATE: JULY 2015

DRAWING NO.
EC-3

SHEET 03 OF 15

SEAL

ATTACHMENT C

Attachment D: Drainage Area - 3

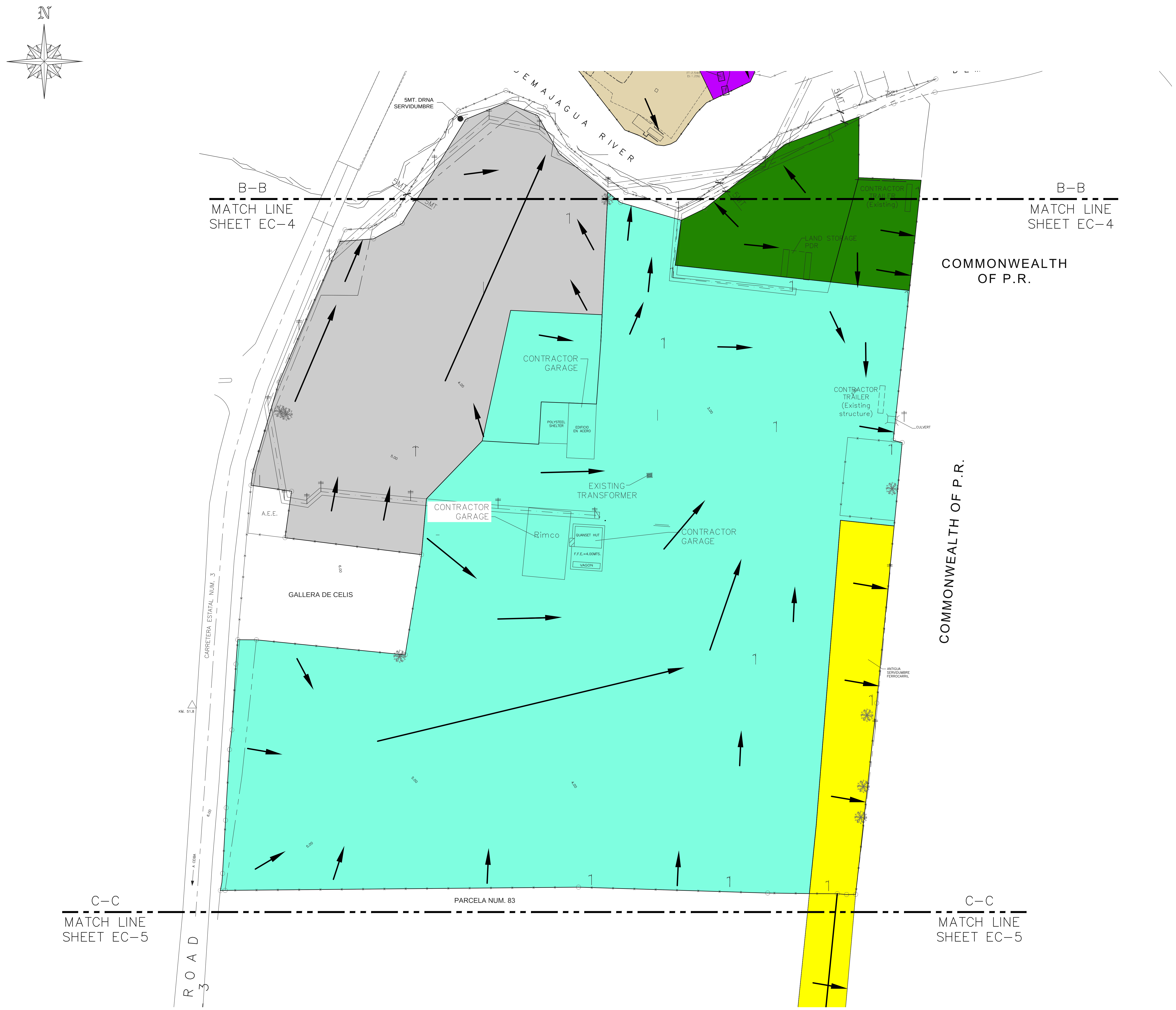

LEGEND

SYMBOL	AREA (ACRE)	AREA (MC)
🟧 ①	3.03	12,260.85
🟧 ②	0.55	2,225.77
🟧 ③	0.76	3,075.60
🟪	4.48	18,155.01
🟦	15.09	61,074.05
🟥	2.03	8,239.46
🟦	0.43	1,746.33
🟫	1.44	5,847.08
🟥	0.66	2,657.85
🟩	2.02	8,178.90
🟧	0.72	2,941.45
🟫	0.16	655.64
⬜	4.17	19,120.29
🟦	14.81	57,707.39
🟨	1.81	7,318.46
🟩	1.30	5,270.68
⬛	11.44	46,336.38

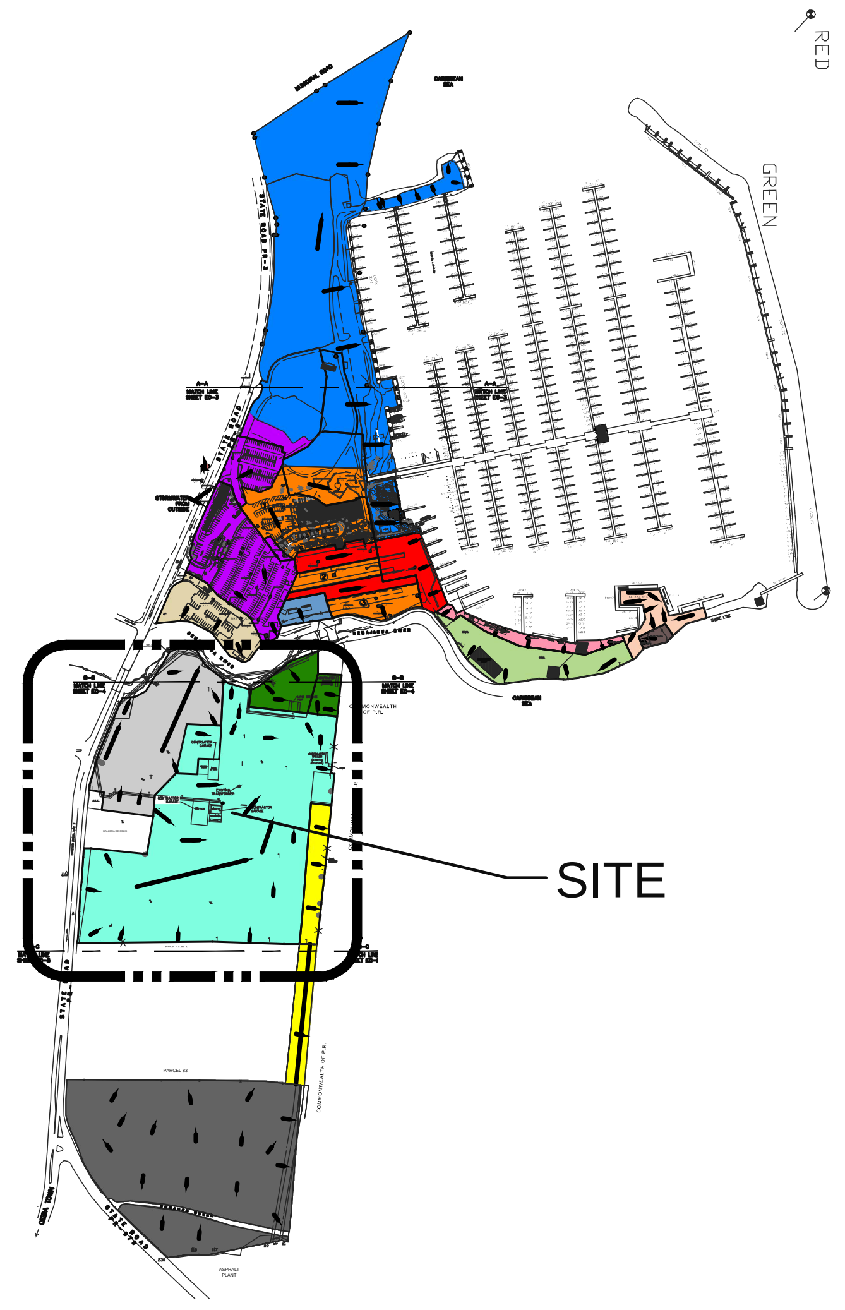

KEY MAP

EHA
ENGINEERING, PSC

OWNER / DEVELOPER

LOGO

PUERTO
DEL REY

NO.	DESCRIPTION	DATE
	REVISION	05/07/21

CONSULTANTS

Nota Importante:

Yo, Edgardo Hernández Alvarado, ingeniero con licencia número 13930, certifico que soy el profesional que diseñó estos planos y las especificaciones complementarias.
También certifico que entiendo que dichos planos y especificaciones cumplen con las disposiciones aplicables del Reglamento Conjunto y las dispociciones aplicablels de los Reglamentos y Códigos de las Agencias, Juntas Reglamentadoras o Corporaciones Públicas con jurisdicción. Reconozco que cualquier declaración falsa o falsificación de los hechos que se haya producido sin conocimiento o por negligencia ya sea por mí, mis agentes o empleados, o por otras personas con mi conocimiento, me hacen responsable de cualquier acción judicial y disciplinaria por la OGPe.

PROJECT NAME / NUMBER

MARINA
PUERTO DEL REY
STATE ROAD P.R. - 3
FAJARDO - P.R.

PROJECT NO.

TITLE

APPROXIMATE MARINA DRAINAGE AREAS

FILE TITLE:
DRAWN BY:
REVISED BY: EHA
PLOT SCALE: 1:1,000
DATE: JULY 2015

DRAWING NO.
EC-4

SHEET 04 OF 15

SEAL

ATTACHMENT D

Attachment E: Drainage Area - 4

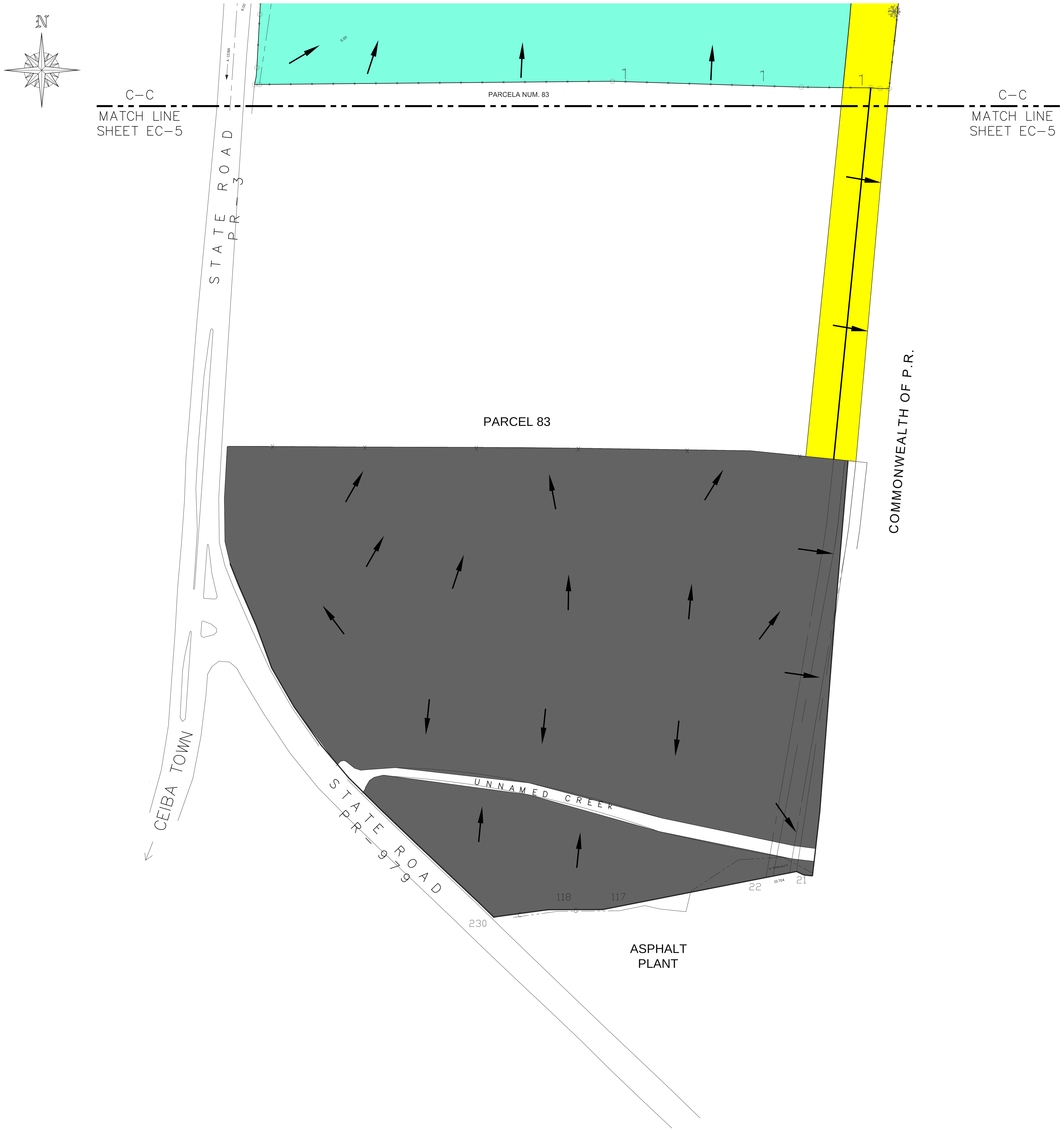

LEGEND		
SYMBOL	AREA (ACRE)	AREA (MC)
🟧 ①	3.03	12,260.85
🟧 ②	0.55	2,225.77
🟧 ③	0.76	3,075.60
🟪	4.48	18,155.01
🟦	15.09	61,074.05
🟥	2.03	8,239.46
🟦	0.43	1,746.33
🟨	1.44	5,847.08
🟥	0.66	2,657.85
🟩	2.02	8,178.90
🟧	0.72	2,941.45
🟫	0.16	655.64
⬜	4.17	19,120.29
🟦	14.81	57,707.39
🟨	1.81	7,318.46
🟩	1.30	5,270.68
⬛	11.44	46,336.38

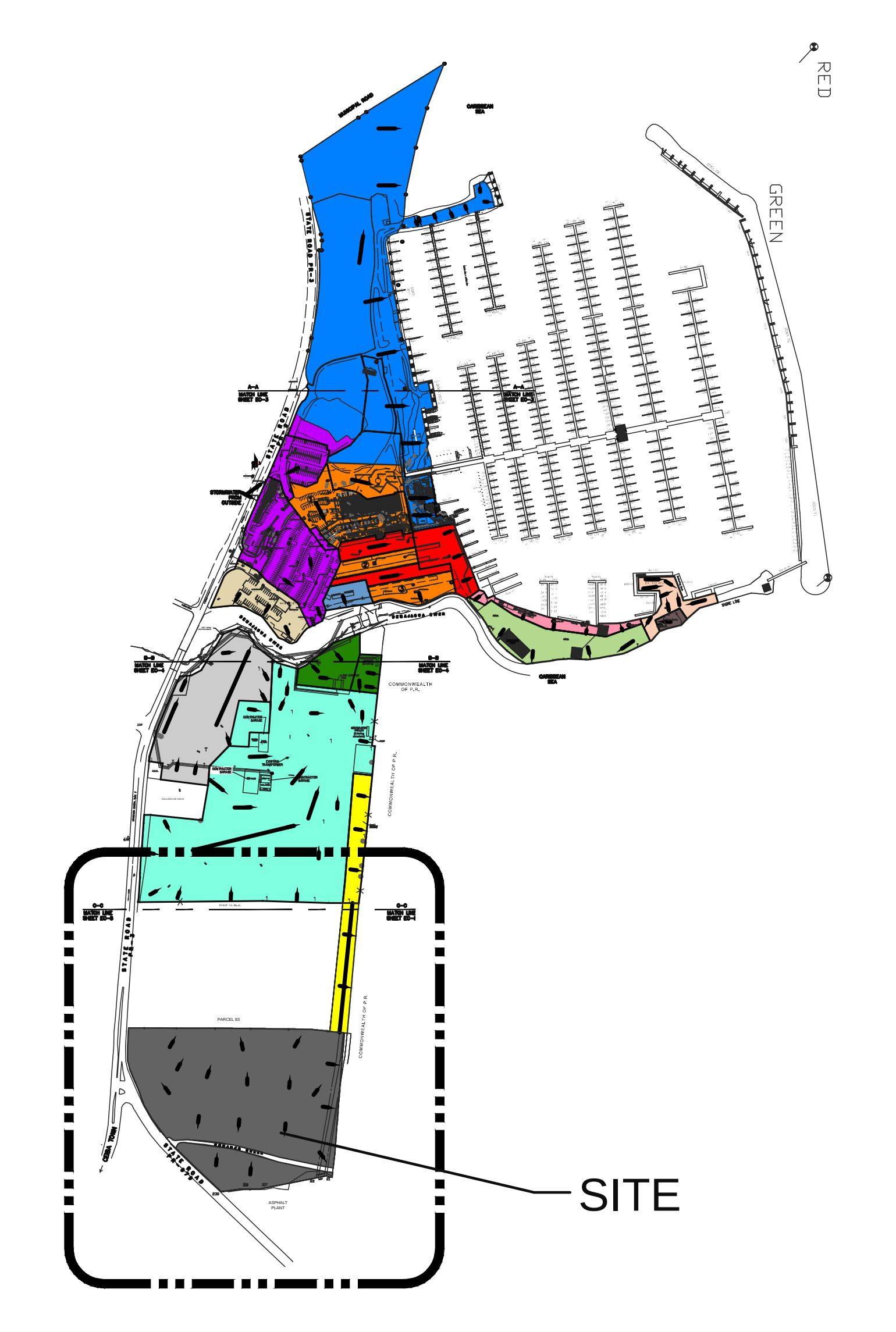

KEY MAP

EHA
ENGINEERING, PSC

OWNER / DEVELOPER

LOGO

PUERTO DEL REY

NO.	DESCRIPTION	DATE
	REVISION	05/07/21

CONSULTANTS

Nota Importante:

Yo, Edgardo Hernández Alvarado, ingeniero con licencia número 13930, certifico que soy el profesional que diseñó estos planos y las especificaciones complementarias.
También certifico que entiendo que dichos planos y especificaciones cumplen con las disposiciones aplicables del Reglamento Conjunto y las dispociciones aplicablels de los Reglamentos y Códigos de las Agencias, Juntas Reglamentadoras o Corporaciones Públicas con jurisdicción. Reconozco que cualquier declaración falsa o falsificación de los hechos que se haya producido sin conocimiento o por negligencia ya sea por mí, mis agentes o empleados, o por otras personas con mi conocimiento, me hacen responsable de cualquier acción judicial y disciplinaria por la OGPe.

PROJECT NAME / NUMBER

MARINA
PUERTO DEL REY
STATE ROAD P.R. - 3
FAJARDO - P.R.

PROJECT NO.
.

TITLE

APPROXIMATE MARINA DRAINAGE AREAS

FILE TITLE:
DRAWN BY:
REVISED BY: EHA
PLOT SCALE: 1:1,000
DATE: JULY 2015

DRAWING NO.
EC-5

SHEET	OF
05	15

SEAL

ATTACHMENT E

Attachment F: Impervious Areas

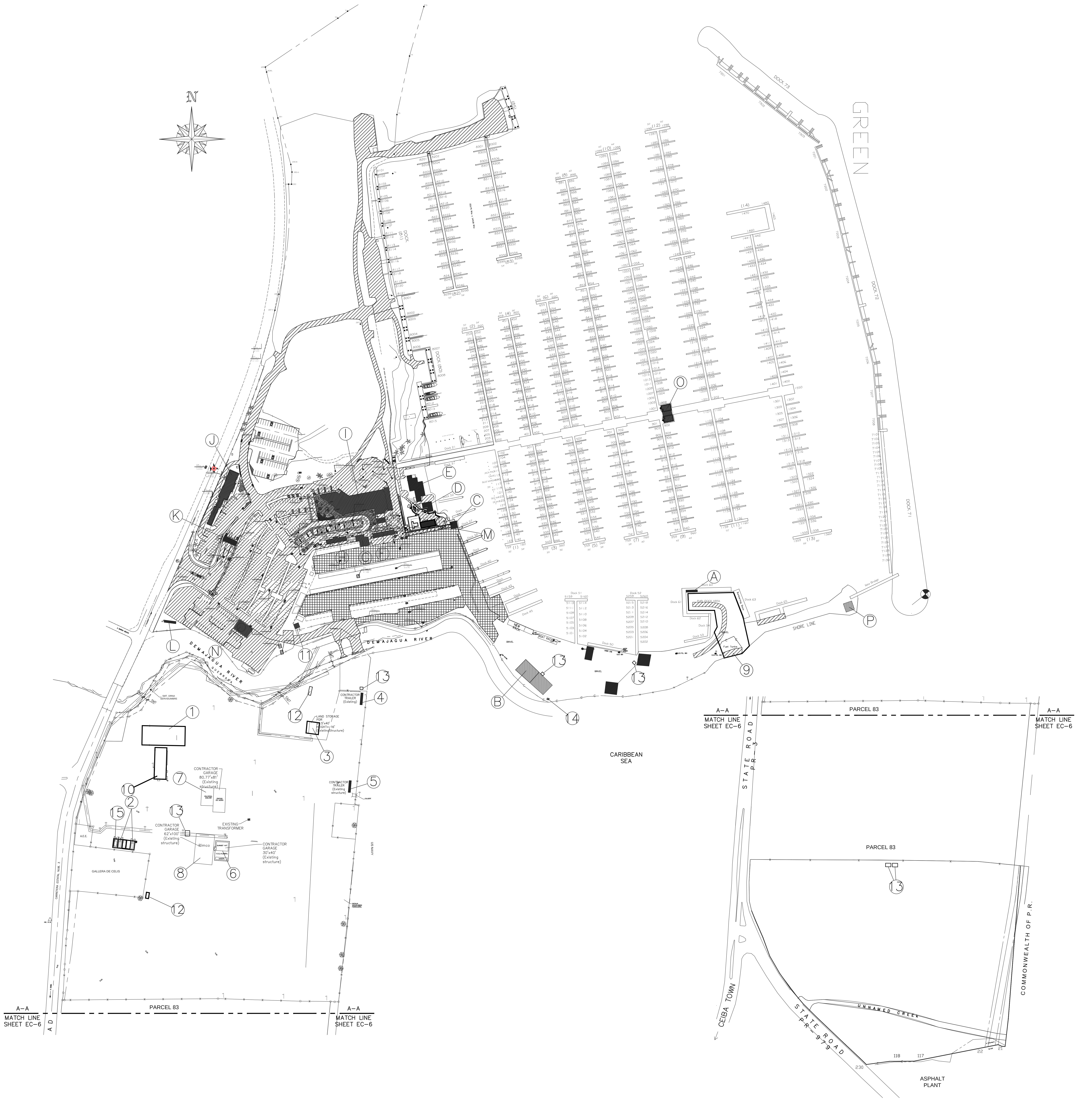

COMMERCIAL		
ID	FACILITY	APPROXIMATE AREA (SQ.FT.)
Ⓐ	FUEL DOCK STORE	206.03
Ⓑ	BOAT PARTS STORE	3,084.89
Ⓒ	WAITING AREA	385.00
Ⓓ	GAME ROOM	810.09
Ⓔ	RESTAURANT	2,957.92
Ⓕ	BATHROOMS	1,125.00
Ⓖ	BATHROOMS & LAUNDRY	1,319.41
Ⓗ	CONCIERGE BUILDING	1,108.97
Ⓘ	MAIN BUILDING	15,599.23
Ⓙ	COMMERCIAL BUILDING	5,127.52
Ⓚ	MAIN ENTRANCE BUILDING	89.00
Ⓛ	BOAT SALES CONCESSIONARY	320.00
Ⓜ	EXCURSIONS CONCESSIONARY	1,003.30
Ⓝ	WATER TANK	346.36
Ⓞ	DOCK CENTER BUILDING	1,824.63
Ⓟ	STORAGE BUILDING	899.97

INDUSTRIAL (POTENTIAL POLLUTANTS)		
ID	CONTRACTOR	APPROXIMATE AREA (SQ.FT.)
①	THE YACHT GARAGE	9,439.30
②	GARBAGE COMPACTOR BIN	375.94
③	ONE STOP MARINE	1,674.11
④	RS MARINE SERVICE	320.00
⑤	WILCO WELDING SERVICE	314.33
⑥	WALLY CASTRO MARINE	3,149.30
⑦	ISLAND MARINE	533.50
⑧	RIMCO	576.58
⑨	FUEL DOCK (TAS)	337.67
⑩	PDR MAINTENANCE	4,242.50
⑪	USED OIL RECOVERY FACILITY	187.97
⑫	CHAMO'S BOAT REPAIR	199.99
⑬	TRASH	
⑭	SEPTIC TANK	
⑮	GARBAGE OPEN CONTAINER	199.56

IMPERVIOUS AREAS		
SYMBOL	ID	AREA (ACRE)
▨	PARKING, ROADS & PLAZAS	8.15
▦	BOAT STORAGE RACKS	2.48

EHA ENGINEERING, PSC

OWNER / DEVELOPER

LOGO

PUERTO DEL REY

NO.	DESCRIPTION	DATE
	REVISION	05/11/21

CONSULTANTS

Nota Importante:
Yo, Edgardo Hernández Alvarado, ingeniero con licencia número 13930, certifico que soy el profesional que diseñó estos planos y las especificaciones complementarias. También certifico que entiendo que dichos planos y especificaciones cumplen con las disposiciones aplicables del Reglamento Conjunto y las dispociciones aplicablels de los Reglamentos y Códigos de las Agencias, Juntas Reglamentadoras o Corporaciones Públicas con jurisdicción. Reconozco que cualquier declaración falsa o falsificación de los hechos que se haya producido sin conocimiento o por negligencia ya sea por mí, mis agentes o empleados, o por otras personas con mi conocimiento, me hacen responsable de cualquier acción judicial y disciplinaria por la OGPe.

PROJECT NAME / NUMBER

MARINA
PUERTO DEL REY
STATE ROAD P.R. - 3
FAJARDO - P.R.

PROJECT NO.

TITLE

MARINA STRUCTURES
(IMPREVIOUS AREAS)

FILE TITLE:
DRAWN BY:
REVISED BY: EHA
PLOT SCALE: 1:2,000
DATE: JULY 2015

DRAWING NO.
EC-6

SHEET 06 OF 15

SEAL

ATTACHMENT F

Attachment G: Outfall Location

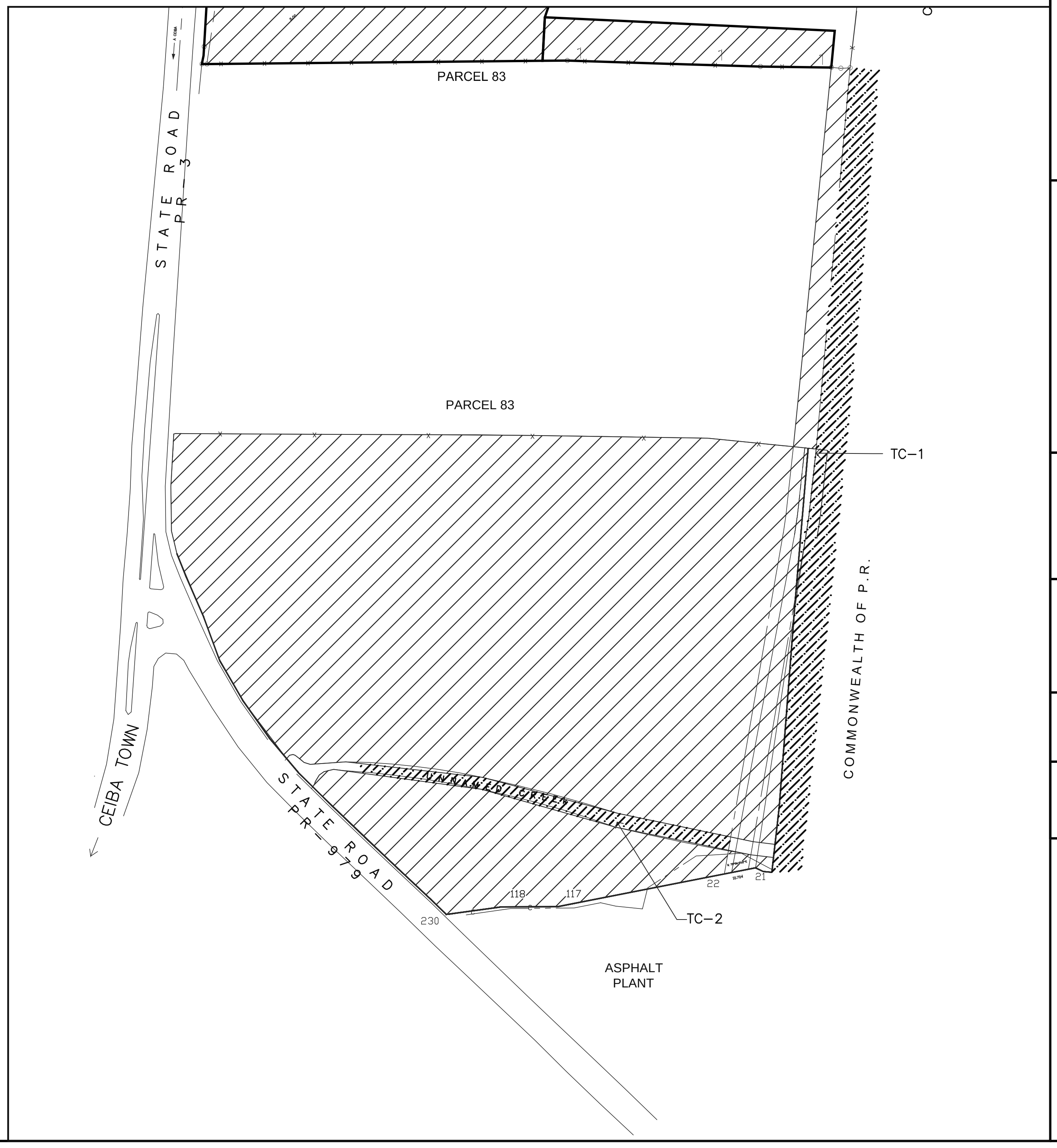

EHA
ENGINEERING, PSC

OWNER / DEVELOPER

LOGO

PUERTO DEL REY

NO.	DESCRIPTION	DATE
	REVISION	05/07/21

CONSULTANTS

Nota Importante:
Yo, Edgardo Hernández Alvarado, ingeniero con licencia número 13930, certifico que soy el profesional que diseñó estos planos y las especificaciones complementarias.
También certifico que entiendo que dichos planos y especificaciones cumplen con las disposiciones aplicables del Reglamento Conjunto y las dispociciones aplicablels de los Reglamentos y Códigos de las Agencias, Juntas Reglamentadoras o Corporaciones Públicas con jurisdicción. Reconozco que cualquier declaración falsa o falsificación de los hechos que se haya producido sin conocimiento o por negligencia ya sea por mí, mis agentes o empleados, o por otras personas con mi conocimiento, me hacen responsable de cualquier acción judicial y disciplinaria por la OGPe.

PROJECT NAME / NUMBER

MARINA
PUERTO DEL REY
STATE ROAD P.R. - 3
FAJARDO - P.R.

PROJECT NO.

TITLE

OUTFALLS & MONITORING LOCATIONS

FILE TITLE:
DRAWN BY:
REVISED BY: EHA
PLOT SCALE: 1:2,0000
DATE: JULY 2015
DRAWING NO. EC-7
SHEET 07 OF 15

SEAL

ATTACHMENT G

Attachment H: Stormwater Infrastructure

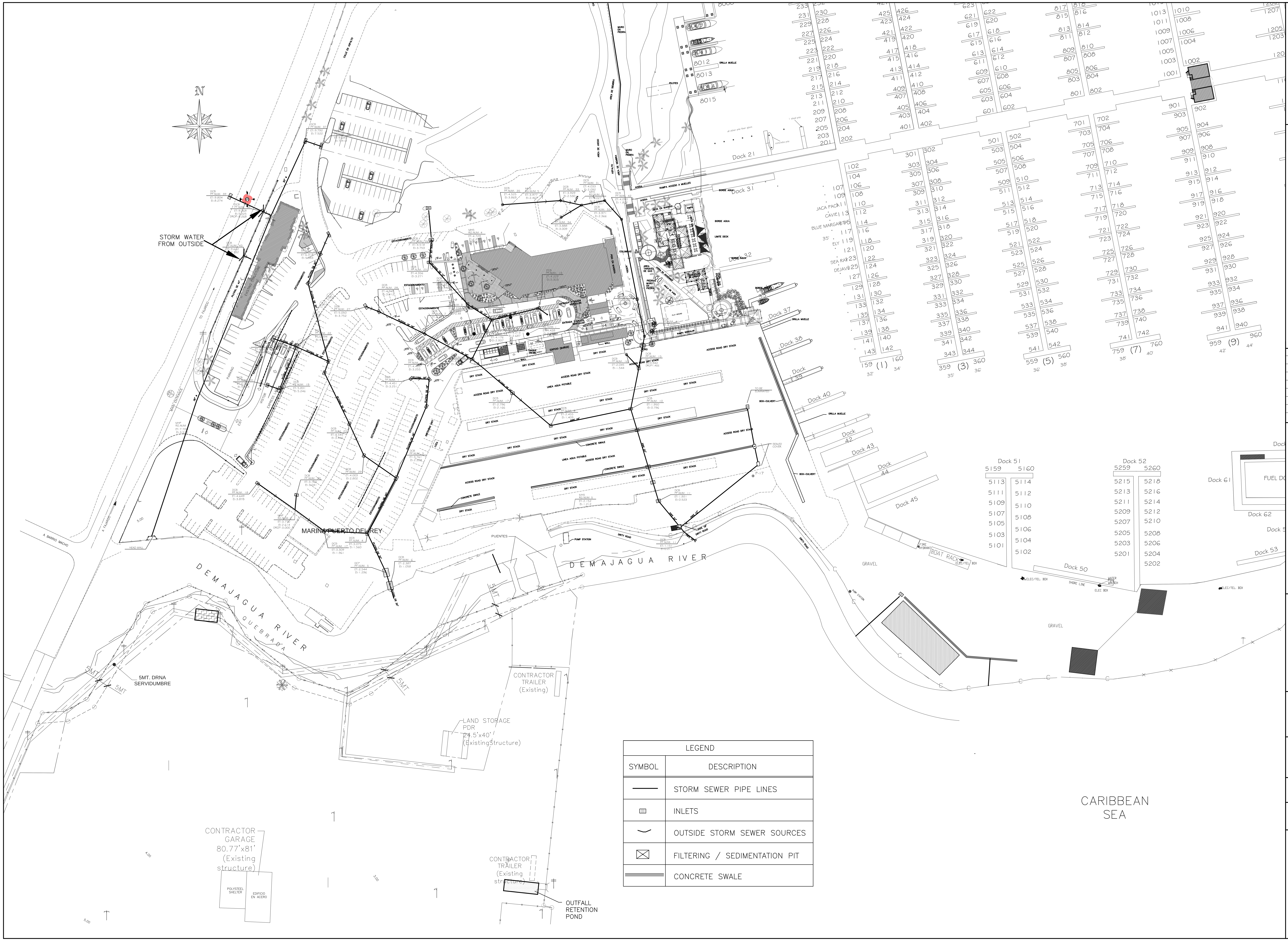

LEGEND

SYMBOL	DESCRIPTION
—	STORM SEWER PIPE LINES
▭	INLETS
◡	OUTSIDE STORM SEWER SOURCES
☒	FILTERING / SEDIMENTATION PIT
▬	CONCRETE SWALE

EHA
ENGINEERING, PSC

OWNER / DEVELOPER

LOGO

PUERTO DEL REY

NO.	DESCRIPTION	DATE
	REVISION	05/07/21

CONSULTANTS

Nota Importante:

Yo, Edgardo Hernández Alvarado, ingeniero con licencia número 13930, certifico que soy el profesional que diseñó estos planos y las especificaciones complementarias.
También certifico que entiendo que dichos planos y especificaciones cumplen con las disposiciones aplicables del Reglamento Conjunto y las dispociciones aplicablels de los Reglamentos y Códigos de las Agencias, Juntas Reglamentadoras o Corporaciones Públicas con jurisdicción. Reconozco que cualquier declaración falsa o falsificación de los hechos que se haya producido sin conocimiento o por negligencia ya sea por mí, mis agentes o empleados, o por otras personas con mi conocimiento, me hacen responsable de cualquier acción judicial y disciplinaria por la OGPe.

PROJECT NAME / NUMBER

MARINA
PUERTO DEL REY
STATE ROAD P.R. - 3
FAJARDO - P.R.

PROJECT NO.
.

TITLE

EXISTING STORM
WATER
INFRASTRUCTURE

FILE TITLE:
DRAWN BY:
REVISED BY: EHA
PLOT SCALE: 1:2,0000
DATE: JULY 2015

DRAWING NO.
EC-8

SHEET 08 OF 15

SEAL

ATTACHMENT H

Attachment I: Site Plan

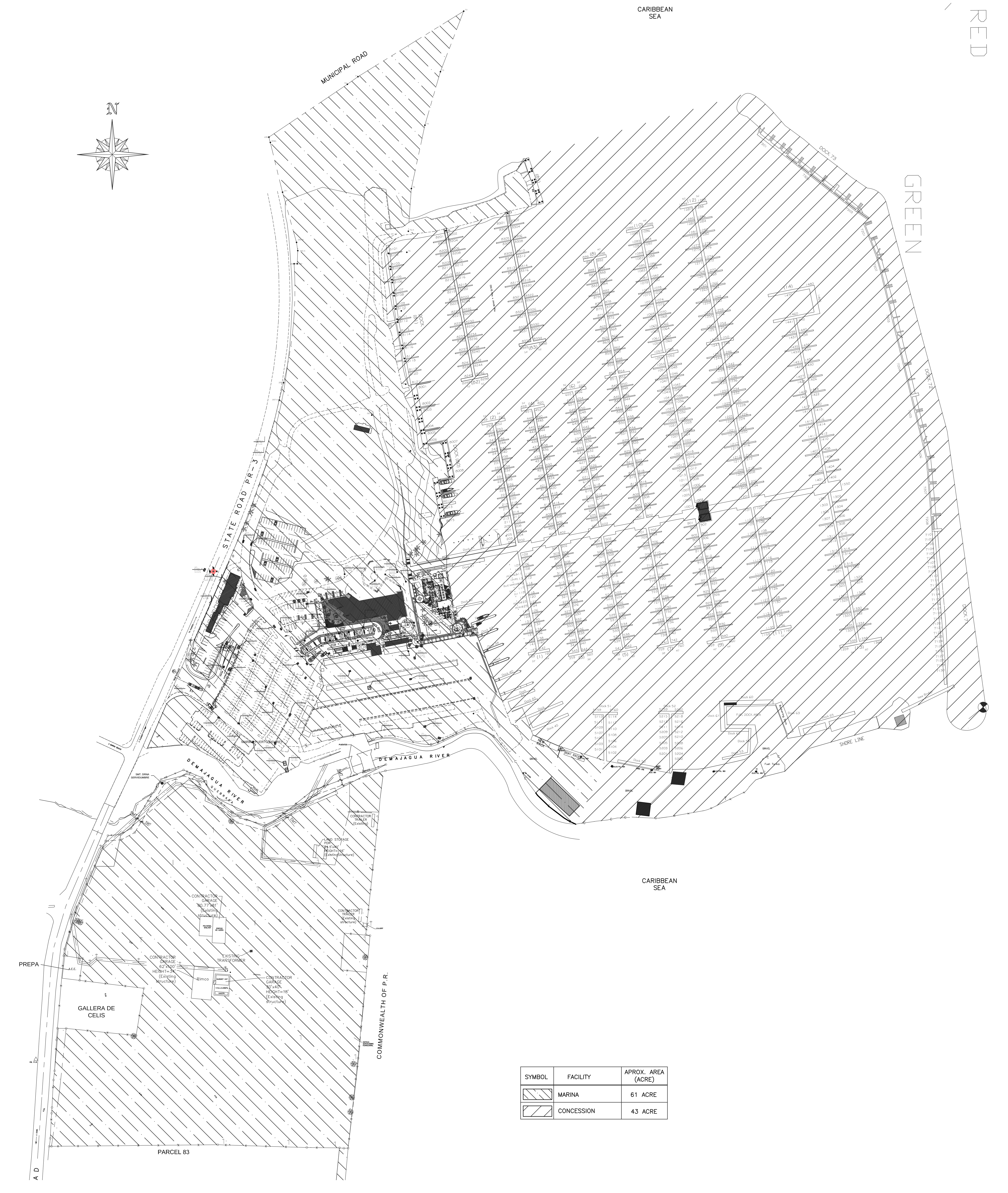

SYMBOL	FACILITY	APROX. AREA (ACRE)
▧	MARINA	61 ACRE
▨	CONCESSION	43 ACRE

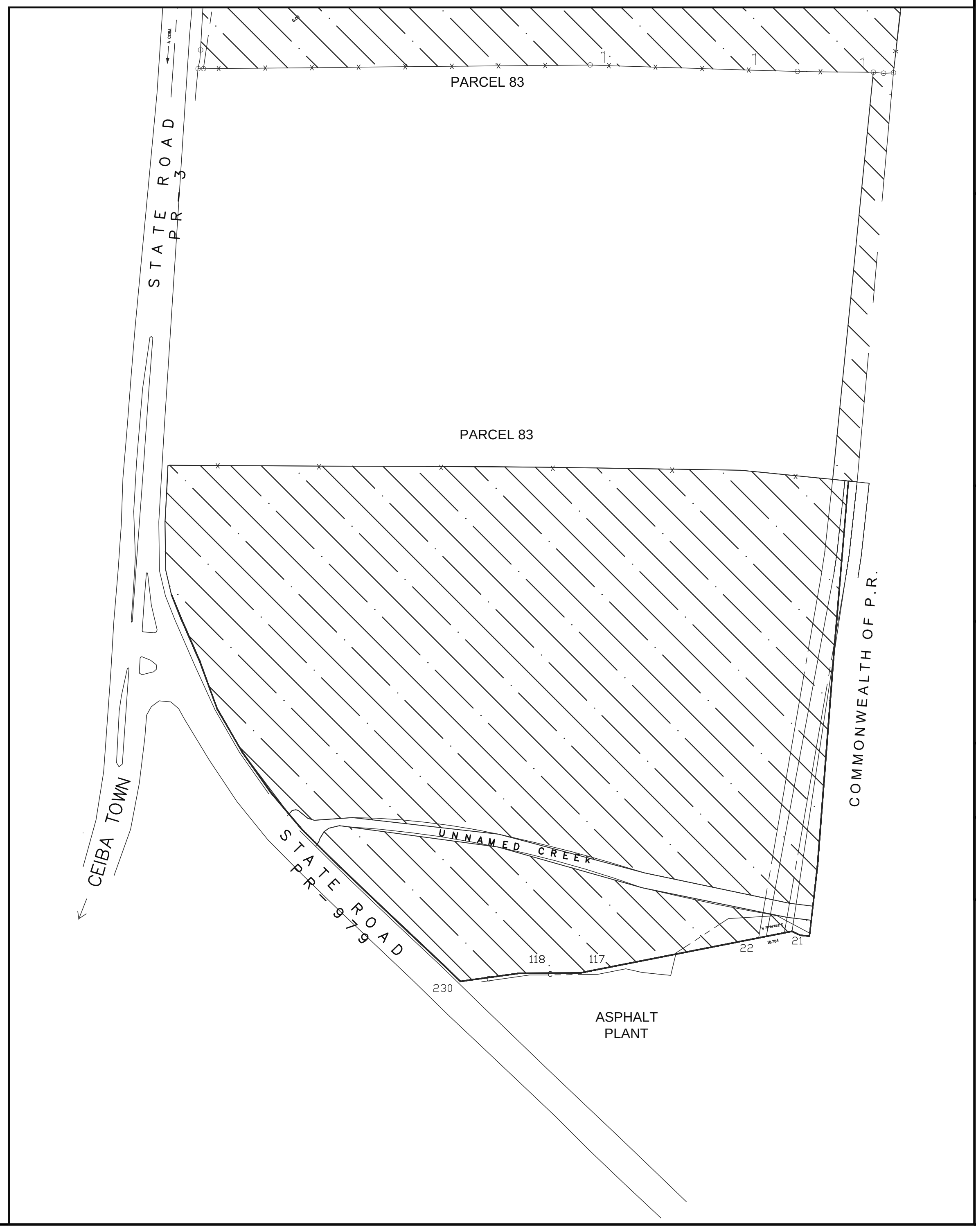

EHA ENGINEERING, PSC

OWNER / DEVELOPER

LOGO

NO.	DESCRIPTION	DATE
	REVISION	05/07/21

CONSULTANTS

Nota Importante:

Yo, Edgardo Hernández Alvarado, ingeniero con licencia número 13930, certifico que soy el profesional que diseñó estos planos y las especificaciones complementarias.
También certifico que entiendo que dichos planos y especificaciones cumplen con las disposiciones aplicables del Reglamento Conjunto y las dispocisiones aplicablels de los Reglamentos y Códigos de las Agencias, Juntas Reglamentadoras o Corporaciones Públicas con jurisdicción. Reconozco que cualquier declaración falsa o falsificación de los hechos que se haya producido sin conocimiento o por negligencia ya sea por mí, mis agentes o empleados, o por otras personas con mi conocimiento, me hacen responsable de cualquier acción judicial y disciplinaria por la OGPe.

PROJECT NAME / NUMBER

MARINA
PUERTO DEL REY
STATE ROAD P.R. - 3
FAJARDO - P.R.

PROJECT NO.

TITLE

SITE PLAN

FILE TITLE:
DRAWN BY:
REVISED BY: EHA
PLOT SCALE: 1:2,0000
DATE: JULY 2015

DRAWING NO.
SP-1

SHEET 09 OF 15

SEAL

ATTACHMENT I

Attachment J: Erosion Control Plan CES-1

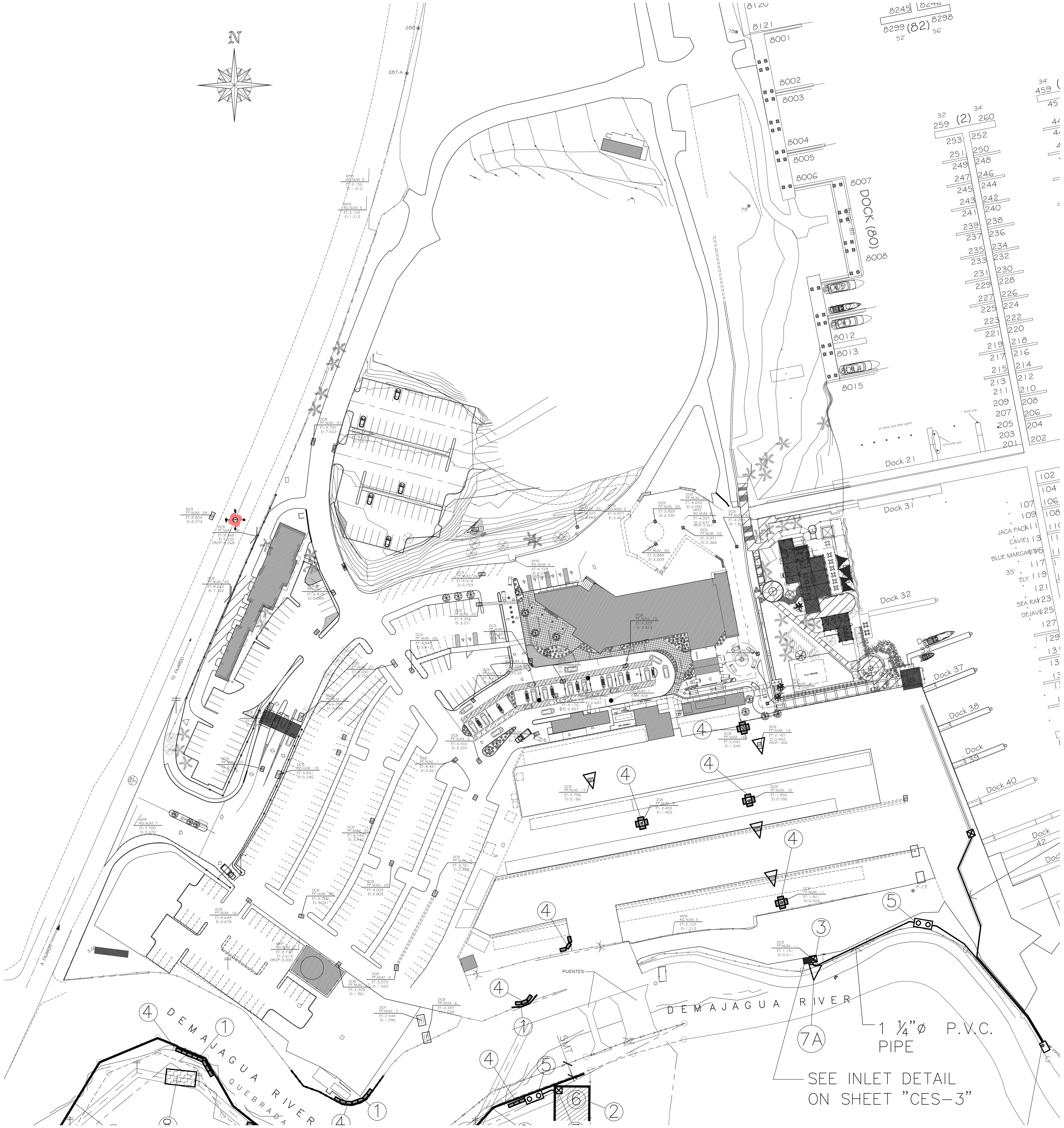

SITE PLAN

SCALE: 1:800

LEGEND		
NUM.	SYMBOL	DESCRIPTION
①	- - - - -	SILT FENCE
②	———	BERMS
③	⊠	SUMP PUMPS
④	⊠	HAY BALES OR TUBES
⑤	○○	HOLDING TANK
⑥	▨	IMPERVIOUS TARP
⑦	▽	INLET FILTER
7A	▽	INLET FILTER (SEE DETAIL ON SHEET CES–3
⑧	▨	RETENTION
⑨	▒	DETENTION POND

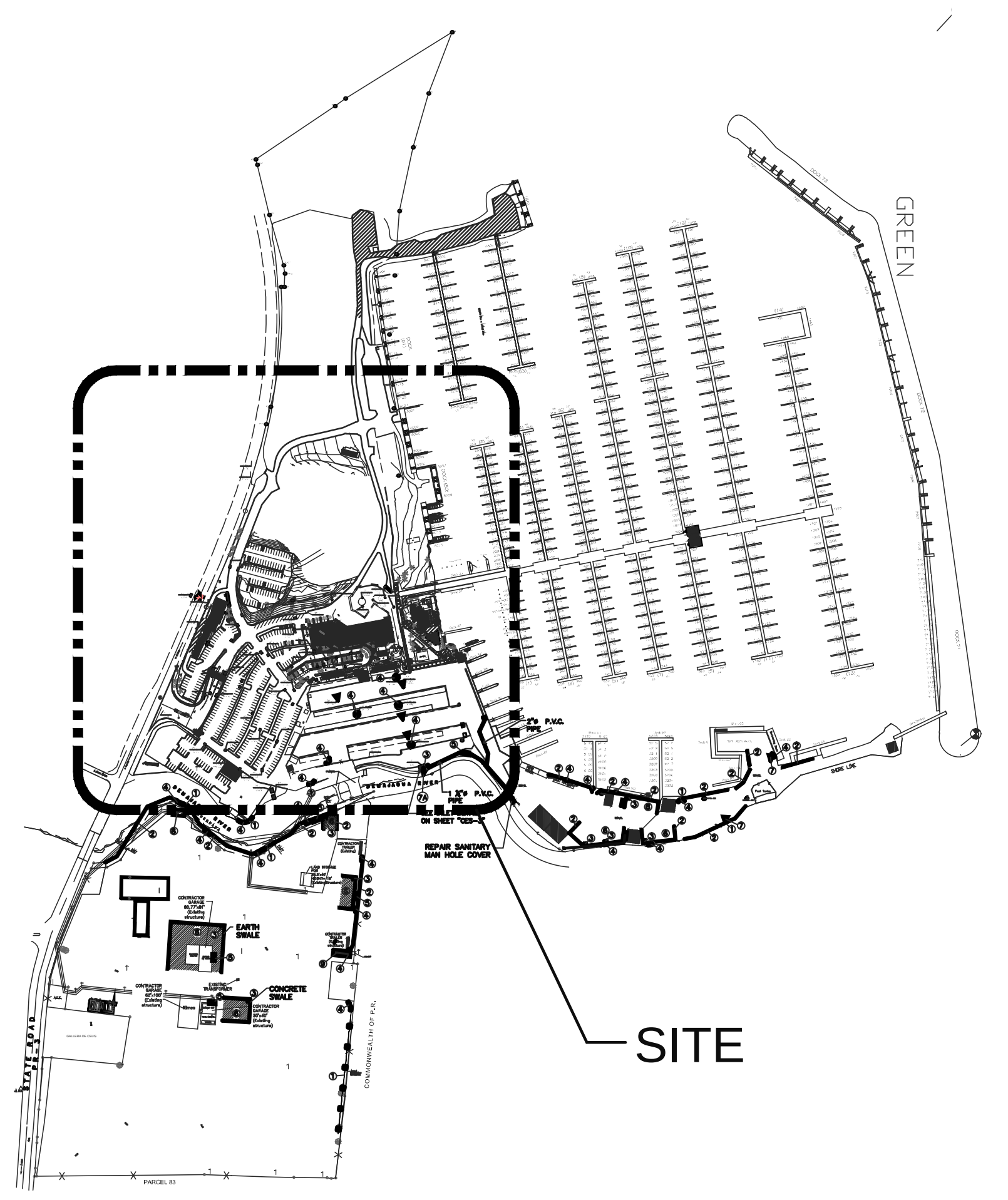

KEY MAP

EHA
ENGINEERING, PSC

OWNER / DEVELOPER

LOGO

PUERTO DEL REY

NO.	DESCRIPTION	DATE
	REVISION	05/07/21

CONSULTANTS

Nota Importante:
Yo, Edgardo Hernández Alvarado, ingeniero con licencia número 13930, certifico que soy el profesional que diseñó estos planos y las especificaciones complementarias.
También certifico que entiendo que dichos planos y especificaciones cumplen con las disposiciones aplicables del Reglamento Conjunto y las dispociciones aplicablels de los Reglamentos y Códigos de las Agencias, Juntas Reglamentadoras o Corporaciones Públicas con jurisdicción. Reconozco que cualquier declaración falsa o falsificación de los hechos que se haya producido sin conocimiento o por negligencia ya sea por mí, mis agentes o empleados, o por otras personas con mi conocimiento, me hacen responsable de cualquier acción judicial y disciplinaria por la OGPe.

PROJECT NAME / NUMBER

MARINA
PUERTO DEL REY
STATE ROAD P.R. - 3
FAJARDO - P.R.

PROJECT NO.

TITLE

CES PLAN 1

FILE TITLE:
DRAWN BY:
REVISED BY: EHA
PLOT SCALE: 1:800
DATE: JULY 2015

DRAWING NO.
CES-1

SHEET 10 OF 15

SEAL

ATTACHMENT J

Attachment K: Erosion Control Plan CES-2

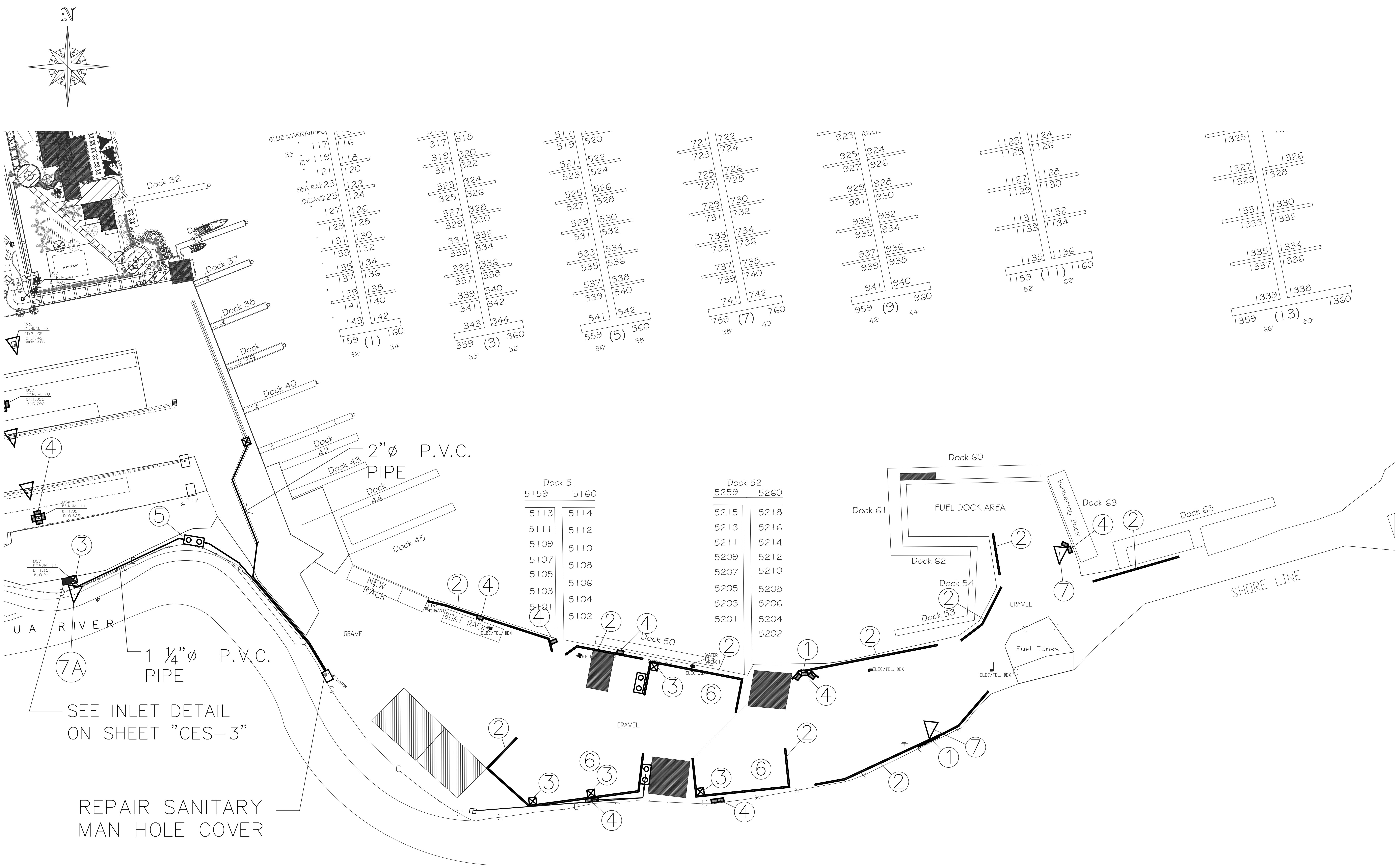

SITE PLAN

SCALE: 1:800

LEGEND		
NUM.	SYMBOL	DESCRIPTION
①	- - - - - -	SILT FENCE
②	——	BERMS
③	☒	SUMP PUMPS
④		HAY BALES OR TUBES
⑤	▭	HOLDING TANK
⑥	▨	IMPERVIOUS TARP
⑦	▽	INLET FILTER
7A	▽	INLET FILTER (SEE DETAIL ON SHEET CES-3
⑧	▦	RETENTION
⑨	░	DETENTION POND

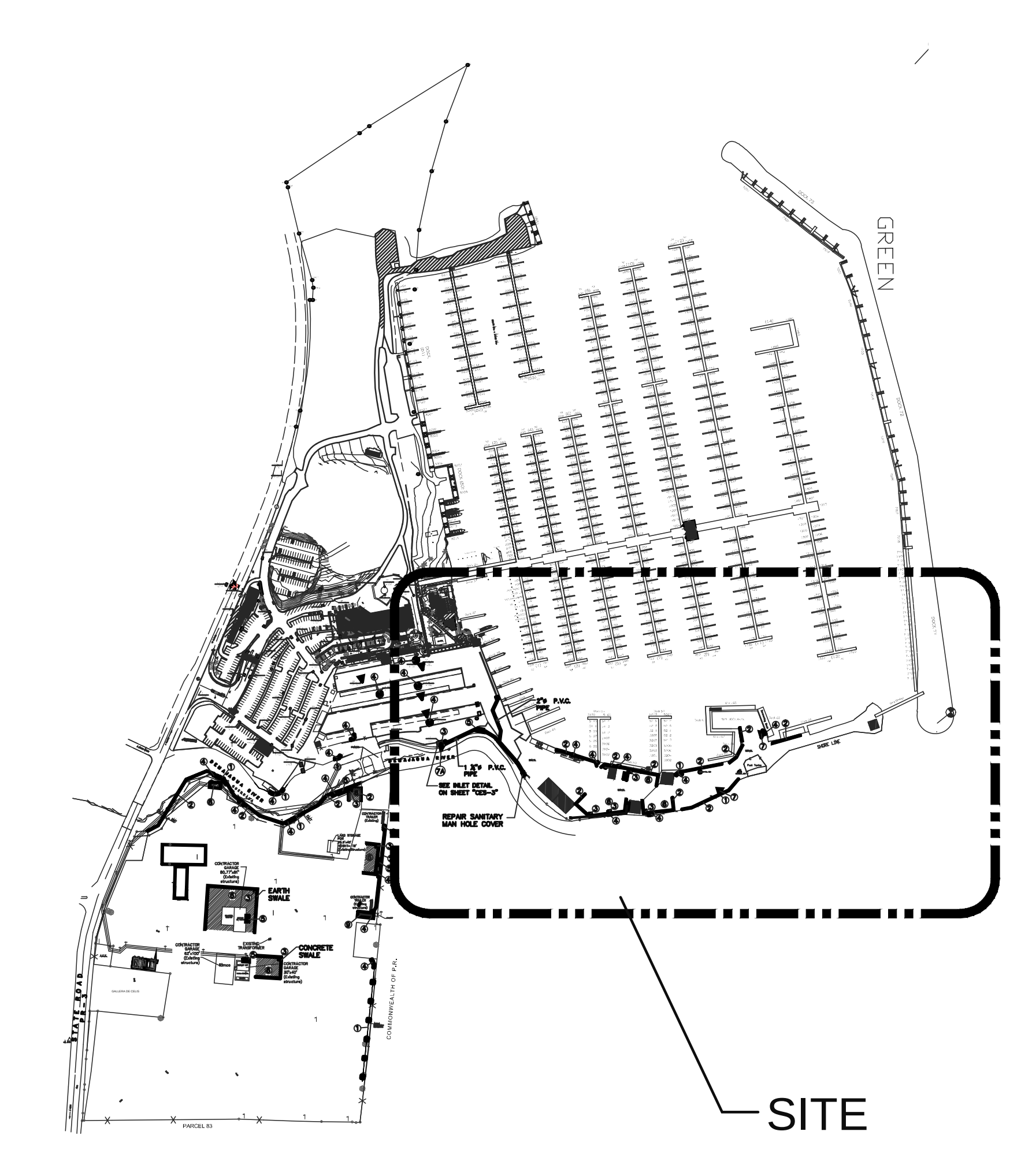

KEY MAP

EHA
ENGINEERING, PSC

OWNER / DEVELOPER

LOGO

PUERTO DEL REY

NO.	DESCRIPTION	DATE
	REVISION	05/07/21

CONSULTANTS

Nota Importante:

Yo, Edgardo Hernández Alvarado, ingeniero con licencia nūmero 13930, certifico que soy el profesional que diseñó estos planos y las especificaciones complementarias.
También certifico que entiendo que dichos planos y especificaciones cumplen con las disposiciones aplicables del Reglamento Conjunto y las dispocisiones aplicablels de los Reglamentos y Cōdigos de las Agencias, Juntas Reglamentadoras o Corporaciones Pūblicas con jurisdicción. Reconozco que cualquier declaración falsa o falsificación de los hechos que se haya producido sin conocimiento o por negligencia ya sea por mí, mis agentes o empleados, o por otras personas con mi conocimiento, me hacen responsable de cualquier acción judicial y disciplinaria por la OGPe.

PROJECT NAME / NUMBER

MARINA
PUERTO DEL REY
STATE ROAD P.R. - 3
FAJARDO - P.R.

PROJECT NO.

TITLE

CES PLAN 2

FILE TITLE:
DRAWN BY:
REVISED BY: EHA
PLOT SCALE: 1:800
DATE: JULY 2015

DRAWING NO.
CES-2

SHEET 11 OF 15

SEAL

ATTACHMENT K

Attachment L: Erosion Control Plan CES-3

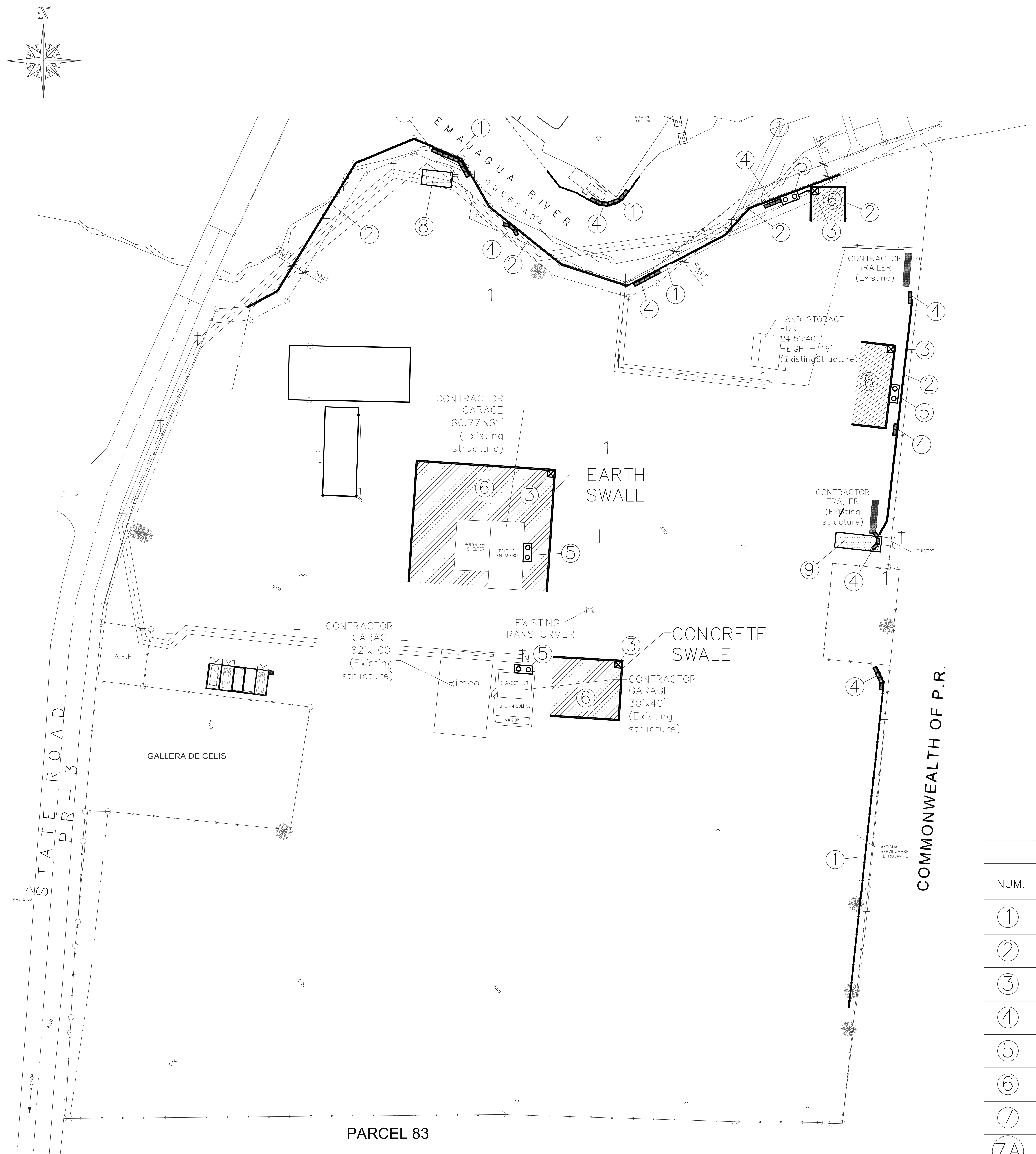

SITE PLAN

SCALE: 1:800

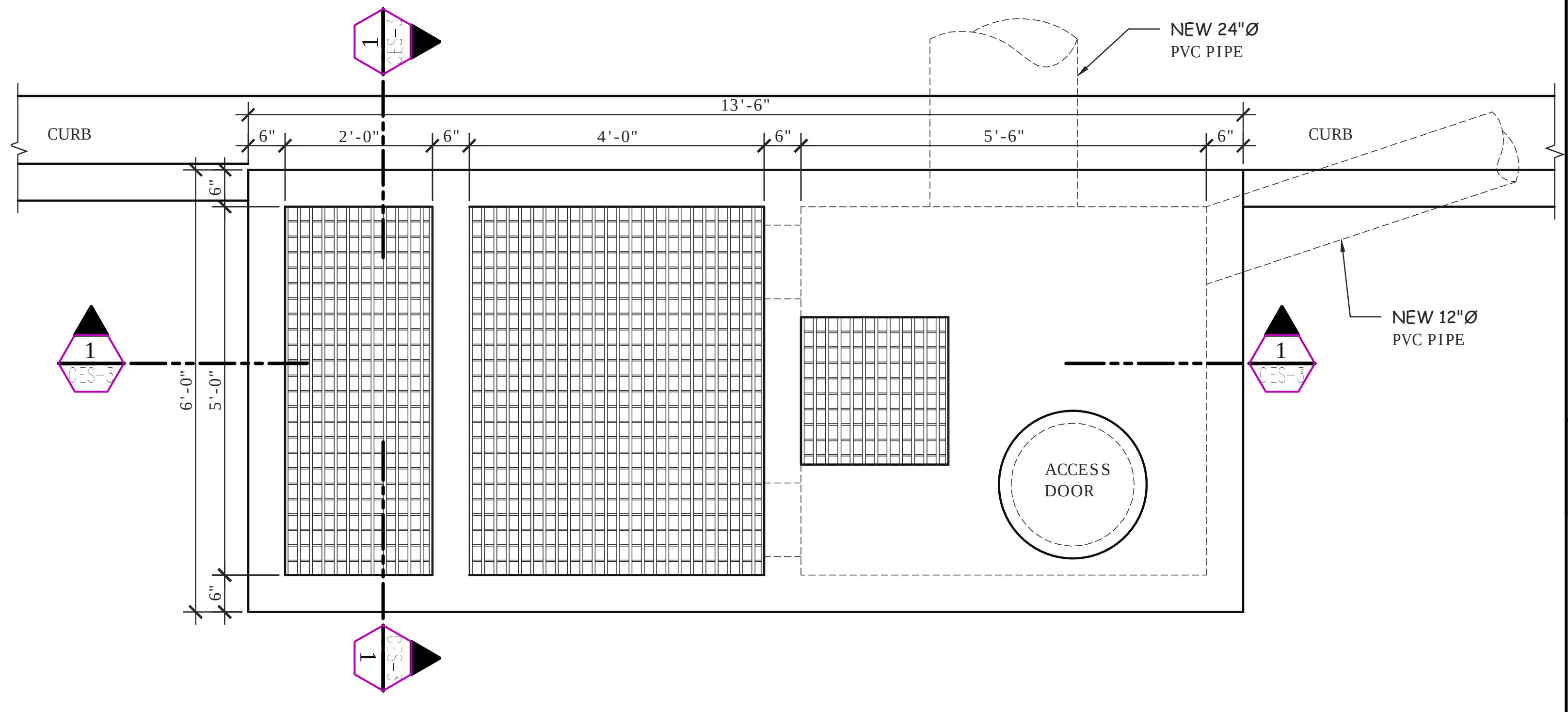

INLET FLOOR PLAN DETAIL

SCALE: 1/2"=1'-0"

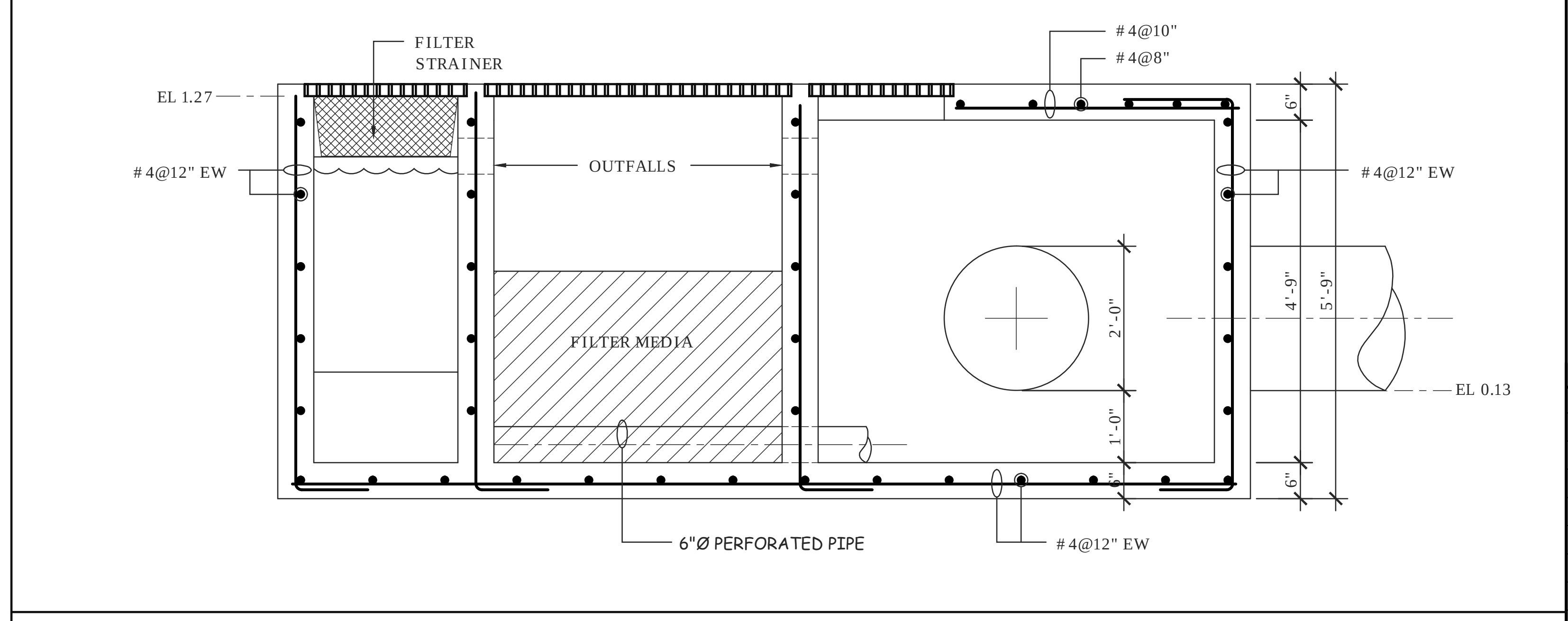

INLET SECTION -1

SCALE: 1/2"=1'-0"

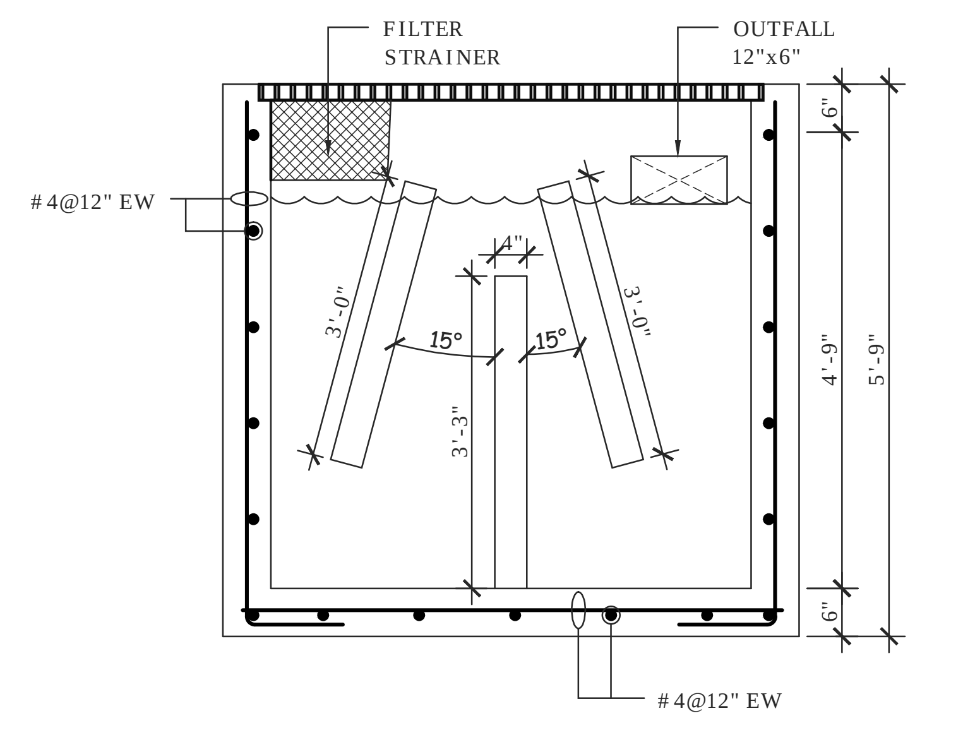

INLET SECTION -2

SCALE: 1/2"=1'-0"

LEGEND

NUM.	SYMBOL	DESCRIPTION
①	───	SILT FENCE
②	───	BERMS
③	☒	SUMP PUMPS
④		HAY BALES OR TUBES
⑤	⊡⊡	HOLDING TANK
⑥	▨	IMPERVIOUS TARP
⑦	▽	INLET FILTER
7A	▽	INLET FILTER (SEE DETAIL ON SHEET CES-3
⑧	▦	RETENTION
⑨	░	DETENTION POND

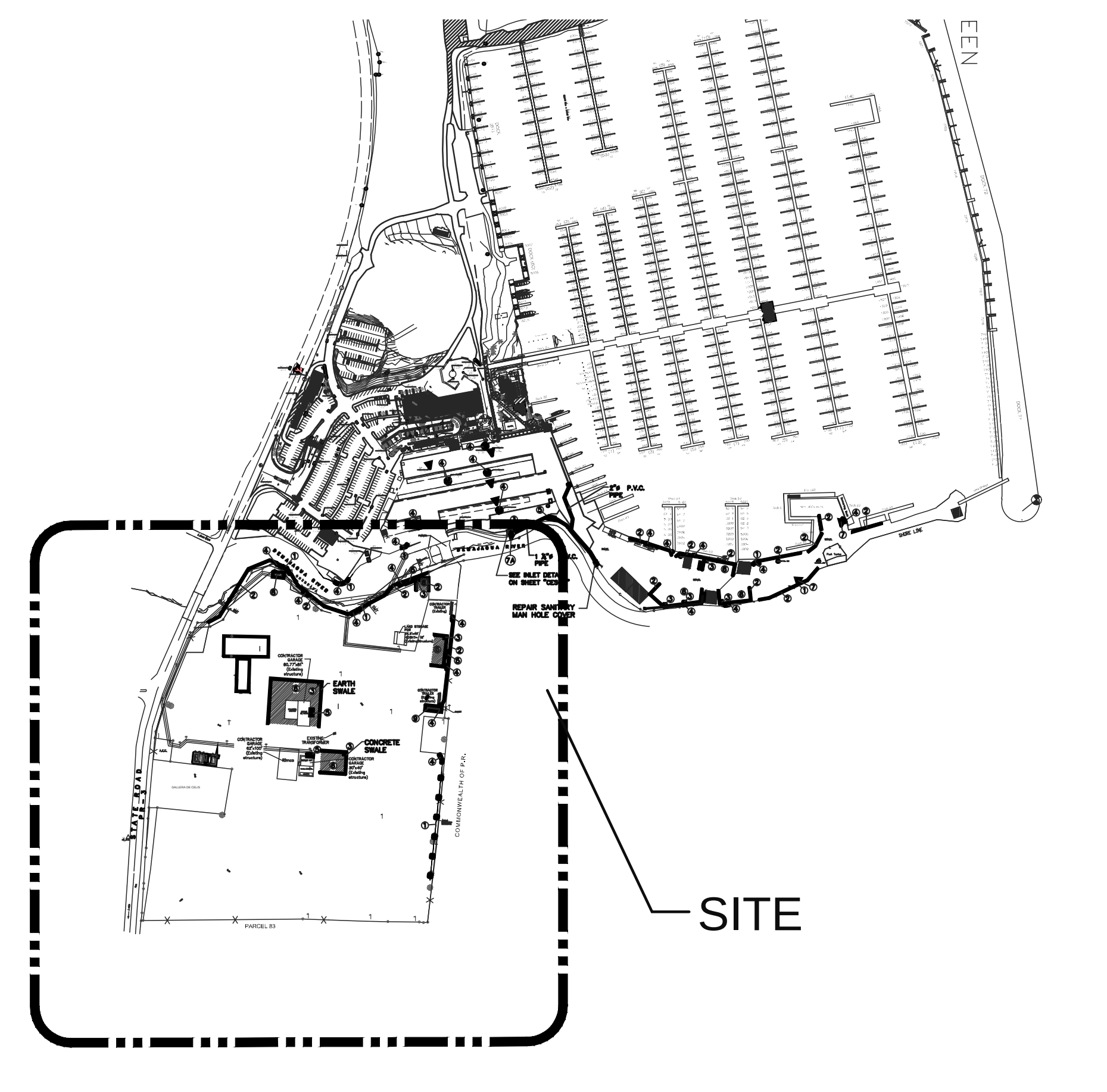

KEY MAP

ENGINEERING, PSC

OWNER / DEVELOPER

LOGO

PUERTO DEL REY

NO.	DESCRIPTION	DATE
	REVISION	05/07/2

CONSULTANTS

Nota Importante:

Yo, Edgardo Hernández Alvarado, ingeniero con licencia número 13930, certifico que soy el profesional que diseñó estos planos y las especificaciones complementarias.
También certifico que entiendo que dichos planos y especificaciones cumplen con las disposiciones aplicables del Reglamento Conjunto y las dispocisiones aplicablels de los Reglamentos y Códigos de las Agencias, Juntas Reglamentadoras o Corporaciones Públicas con jurisdicción. Reconozco que cualquier declaración falsa o falsificación de los hechos que se haya producido sin conocimiento o por negligencia ya sea por mí, mis agentes o empleados, o por otras personas con mi conocimiento, me hacen responsable de cualquier acción judicial y disciplinaria por la OGPe.

PROJECT NAME / NUMBER

MARINA
PUERTO DEL REY
STATE ROAD P.R. - 3
FAJARDO - P.R.

PROJECT NO.

TITLE

CES PLAN 2

FILE TITLE:
DRAWN BY:
REVISED BY: EHA
PLOT SCALE: 1:800
DATE: JULY 2015

DRAWING NO.
CES-3

SHEET 12 OF 15

SEAL

ATTACHMENT L

Attachment M: Erosion Control Plan CES Details

LEGEND		
NUM.	SYMBOL	DESCRIPTION
	—	SILT FENCE
	▬	BERMS
	☒	SUMP PIT
	▬	HAY BALES OR TUBES
	○○	HOLDING TANK
	▨	TARP (POLYETHYLENE MEDIUM DUTY (6 MIL) IMPERVIOUS TARP

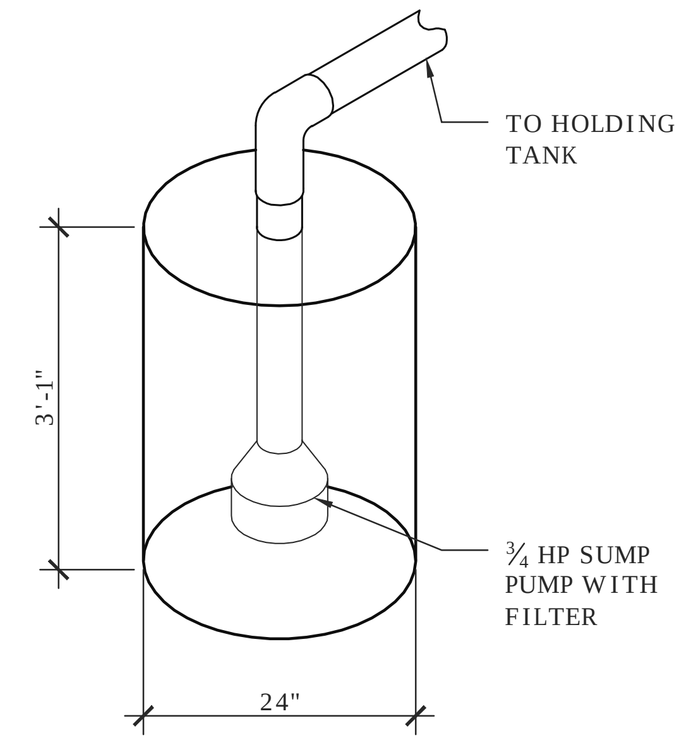

SUMP PUMPS DETAIL

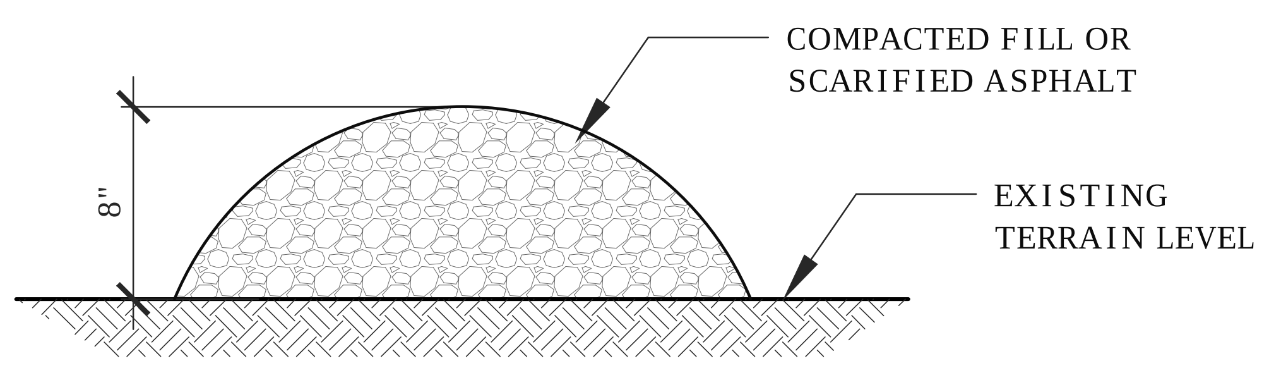

BERM DETAIL

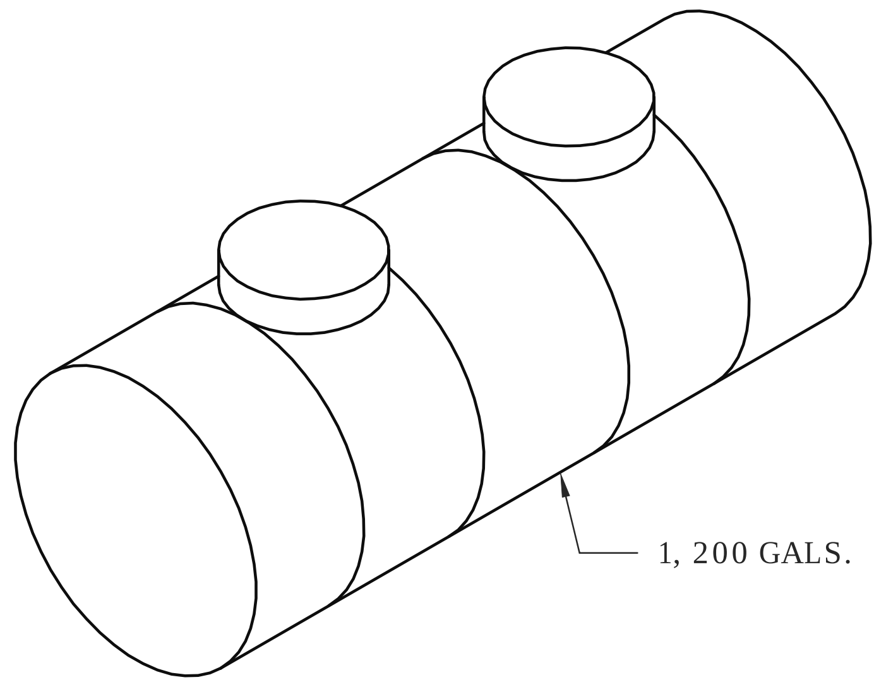

HOLDING TANK

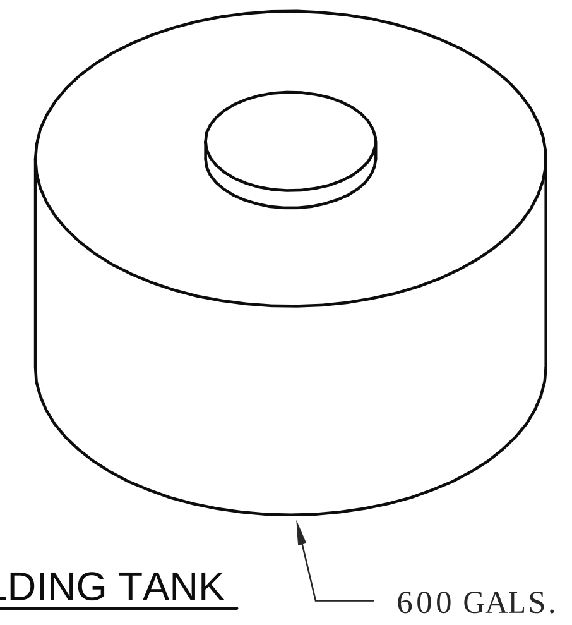

HOLDING TANK

FIGURE 4
STABILIZED CONSTRUCTION ENTRANCE

N.T.S.

STABILIZED CONSTRUCTION ENTRANCE SPECIFICATIONS:

1. STONE SIZE-USE MSHA SIZE NO. 2 (2-1/2" TO 1") OR AASHTO DESIGNATION M43, SIZE NO. 2 (2-1/2" TO 1-1/2"). USE CRUSHED STONE.
2. LENGHT-AS EFFECTIVE, BUT NOT LESS THAN 50 FEET.
3. THICKNESS -NOT LESS THAN EIGHT(8) INCHES.
4. WIDTH-NOT LESS THAN FULL WIDTH OF ALL POINTS INGRESS OR EGRESS.
5. WASHING-WHEN NECESSARY, WHEELS SHALL BE CLEANED TO REMOVE SEDIMENT PRIOR TO ENTRANCE ONTO PUBLIC RIGHT-OF-WAY. WHEN WASHING IS REQUIRED, IT SHALL BE DONE ON AN AREA STABILIZED WITH CRUSHED STONE WHICH DRAINS INTO AN APPROVED SEDIMENT TRAP OR SEDIMENT BASIN. ALL SEDIMENT SHALL BE PREVENTED FROM ENTERING ANY STORM DRAIN, DITCH, OR WATERCOURSE THROUGH USE OF SAND BAGS, GRAVEL, BOARDS OR OTHER APPROVED METHODS.
6. MAINTENANCE-THE ENTRANCE SHALL BE MAINTENED IN A CONDITION IN WHICH WILL PREVENT TRACKING OF FLOWING SEDIMENT ONTO PUBLIC RIGHTS-OF-WAY. THIS MAY REQUIRE PERIODIC TOP DRESSING WITH ADDITIONAL STONE AS CONDITIONS DEMAND AND REPAIR AND/OR CLEANOUT OF ANY MEASURES USED TO TRAP SEDIMEMT. ALL SEDIMENT SPILLED, DROPPED, WASHED OR TRACKED ONTO PUBLIC RIGHTS-OF-WAY MUST BE REMOVED INMEDIATELY.

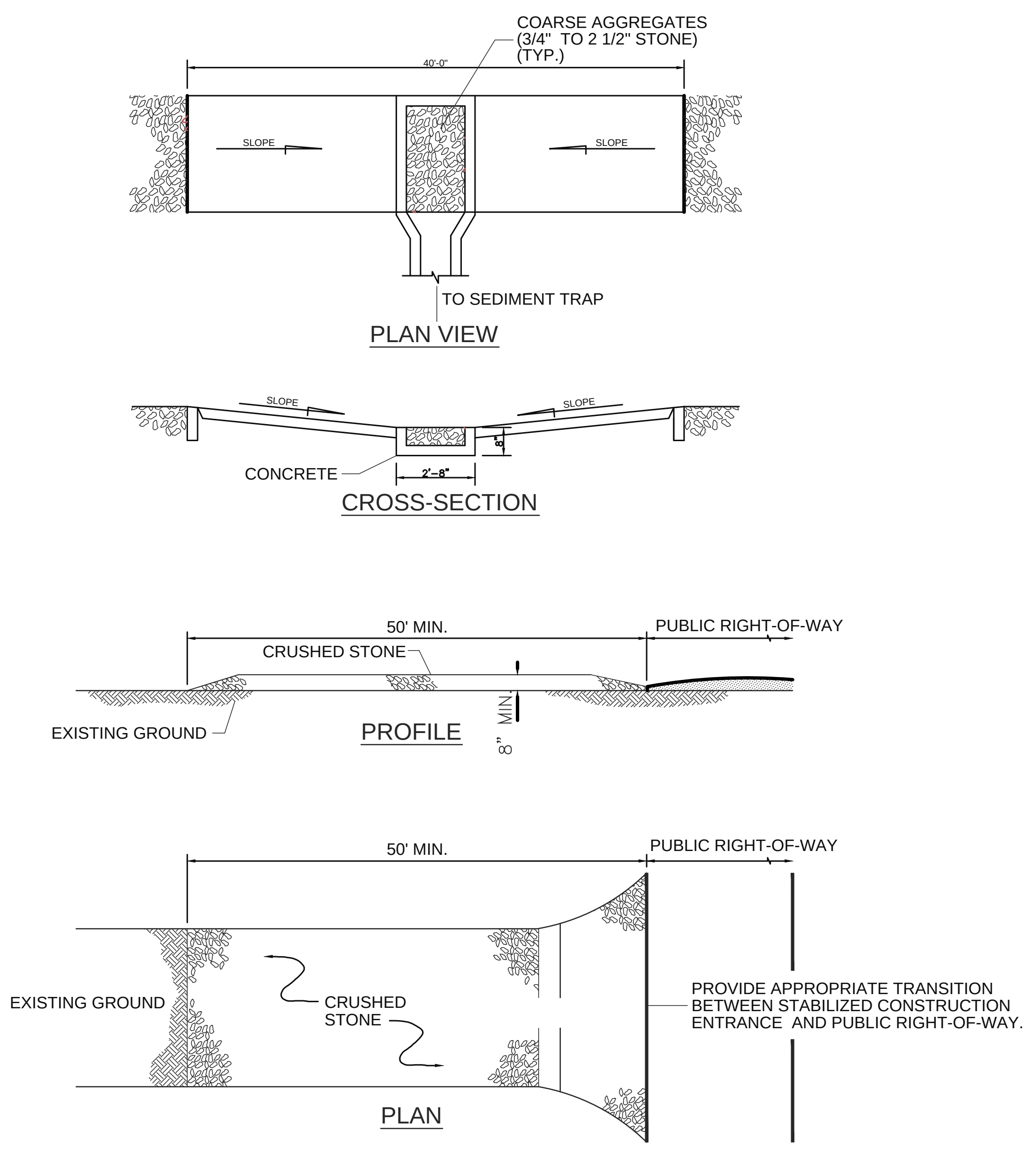

PLAN VIEW

CROSS-SECTION

PROFILE

PLAN

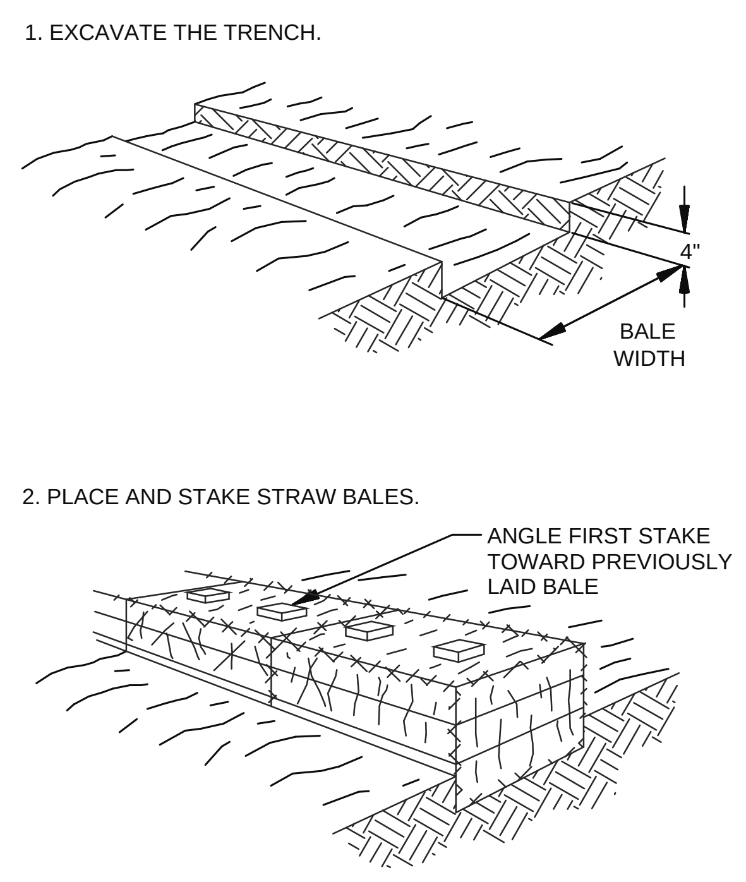
1. EXCAVATE THE TRENCH.

2. PLACE AND STAKE STRAW BALES.

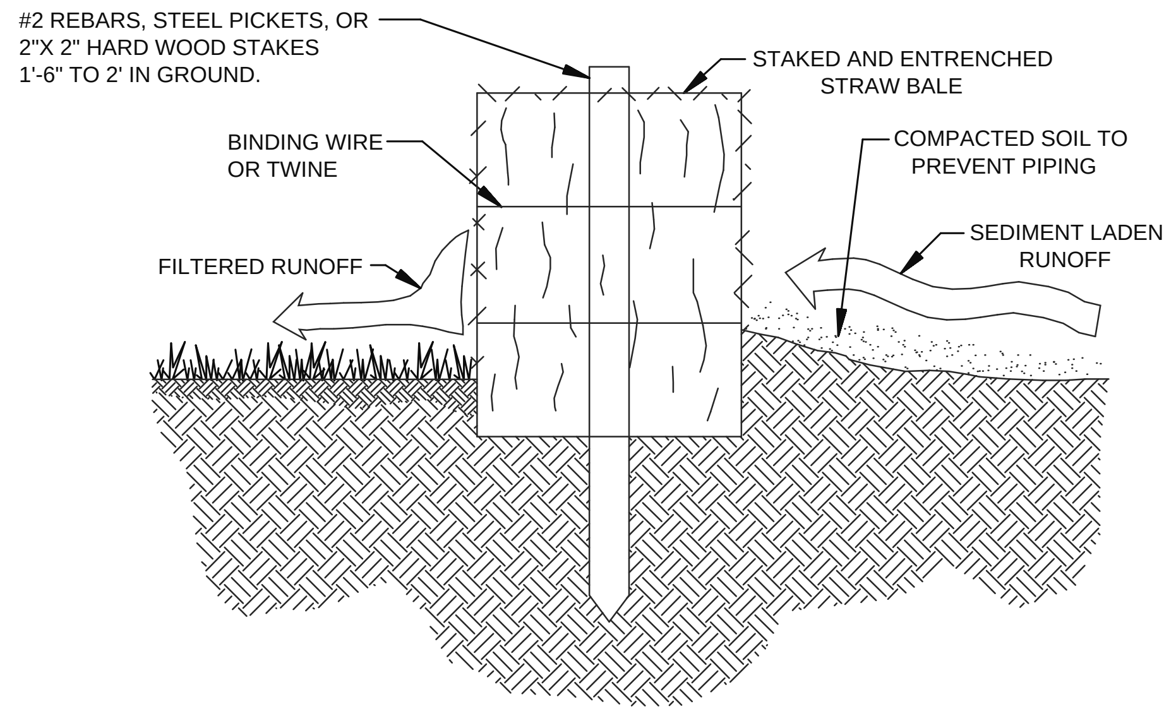

PROPERLY INSTALLED STRAW BALE

(CROSS SECTION)

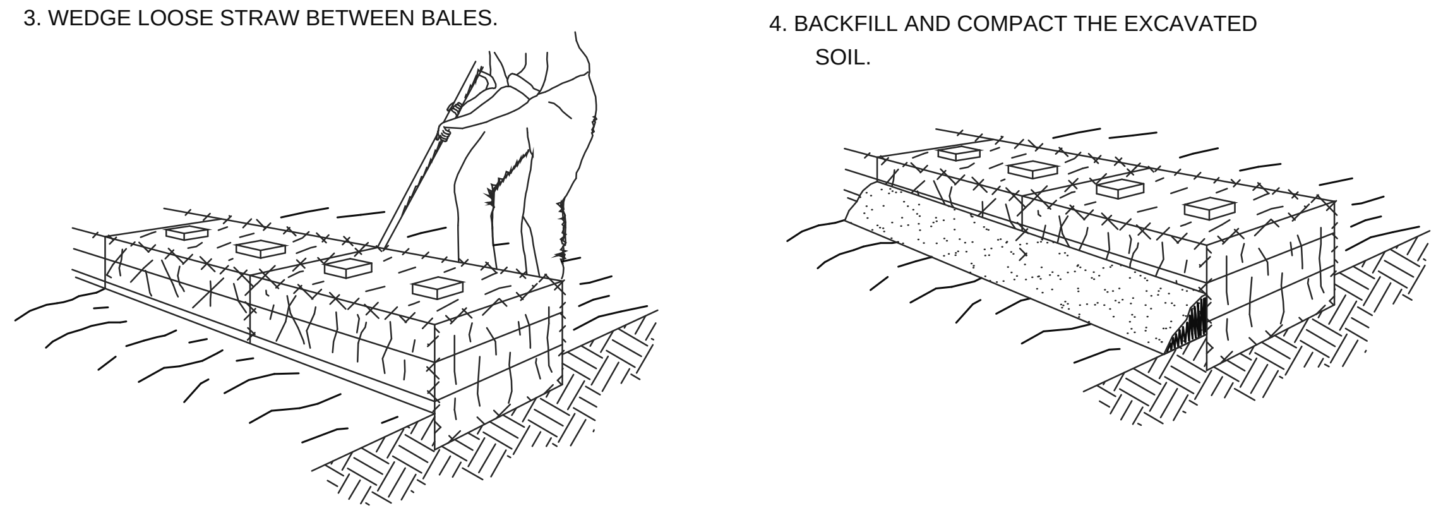
3. WEDGE LOOSE STRAW BETWEEN BALES.

4. BACKFILL AND COMPACT THE EXCAVATED SOIL.

CONSTRUCTION OF STRAW BALE BARRIER

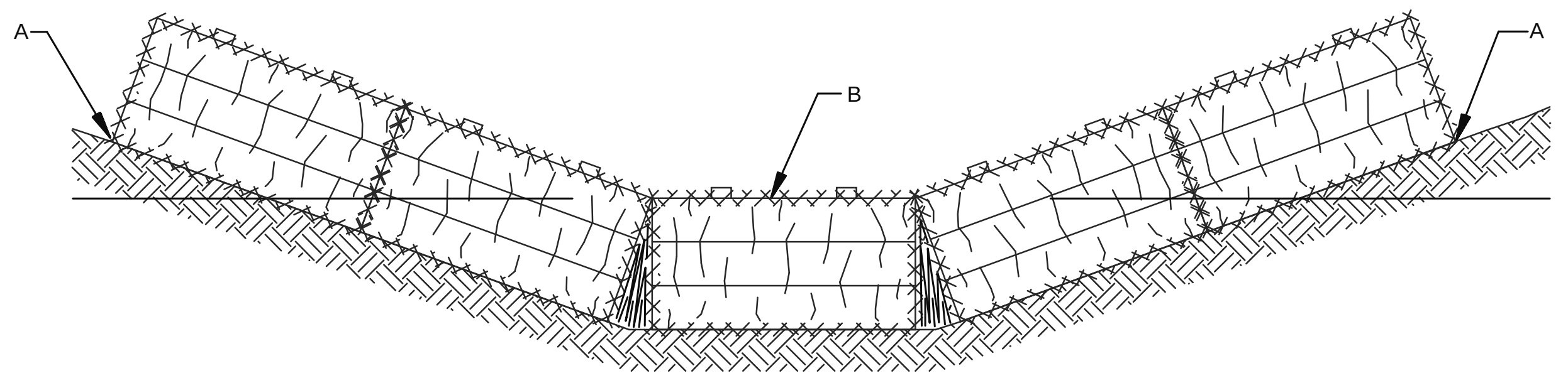

POINT "A" SHALL BE HIGHER THAN POINT "B"

PROPER PLACEMENT OF STRAW BALE BARRIER IN DRAINAGE WAY

(FIGURE 5)
STRAW BALE BARRIER

N.T.S.

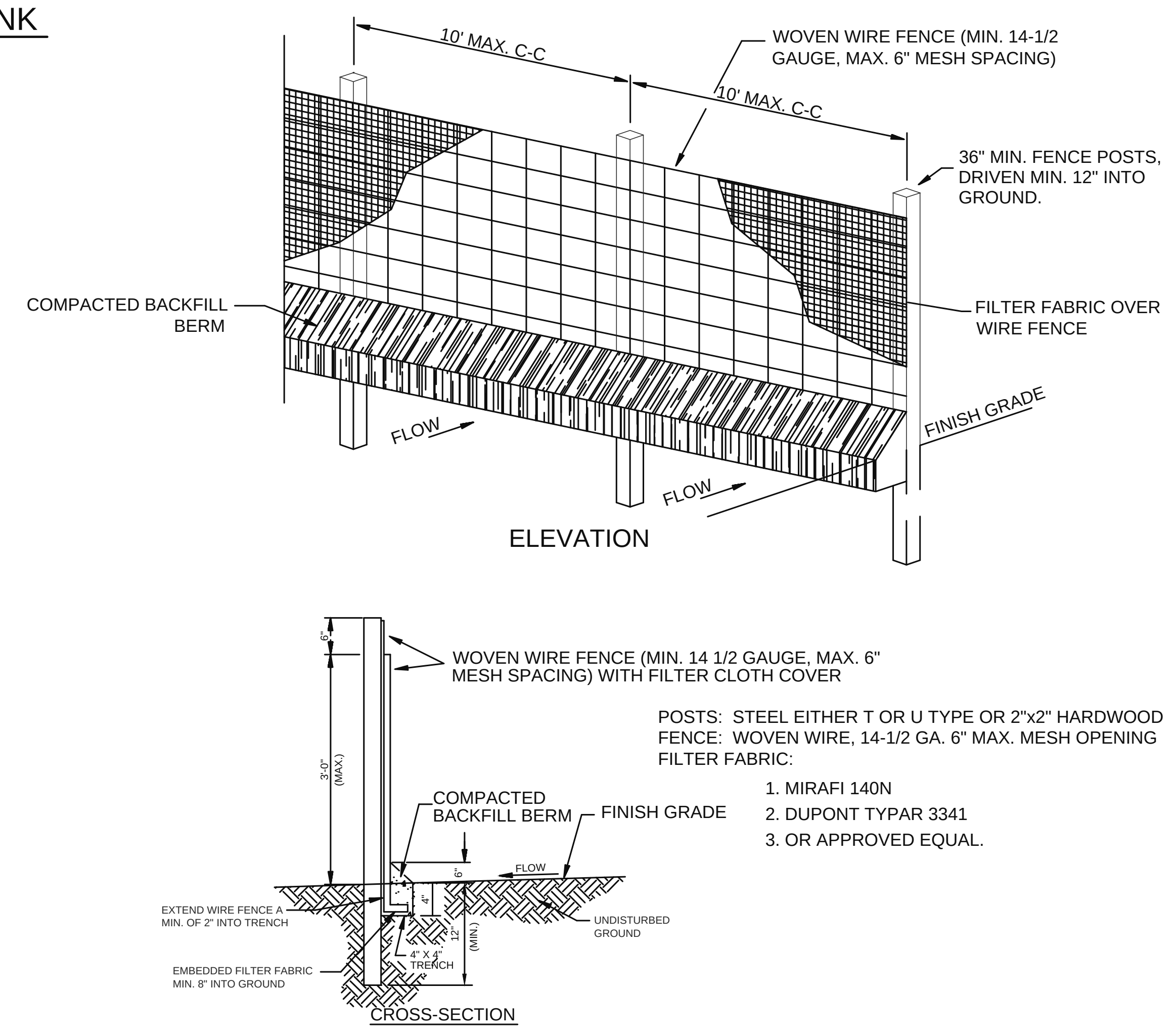

ELEVATION

CROSS-SECTION

POSTS: STEEL EITHER T OR U TYPE OR 2"x2" HARDWOOD
FENCE: WOVEN WIRE, 14-1/2 GA. 6" MAX. MESH OPENING
FILTER FABRIC:

1. MIRAFI 140N
2. DUPONT TYPAR 3341
3. OR APPROVED EQUAL.

1. WOVEN WIRE FENCE TO BE FASTENED SECURELY TO FENCE POSTS WITH WIRE TIES OR STAPLES.
2. FILTER CLOTH TO BE FASTENED SECURELY TO WOVEN WIRE FENCE WITH TIES SPACED EVERY 24" AT TOP AND MID SECTION.
3. WHEN TWO SECTIONS OF FILTER CLOTH ADJOIN EACH OTHER THEY SHALL BE OVERLAPPED BY SIX INCHES AND FOLDED.
4. MAINTENANCE SHALL BE PERFORMED AS NOTED IN THE EROSION CONTROL PLAN. COLLECTED MATERIAL SHALL BE REMOVED WHEN "BULGES" DEVELOP IN THE SILT FENCE.

(FIGURE 1)
SEDIMENTATION/SILT FENCE WITH WIRE SUPPORT

N.T.S.

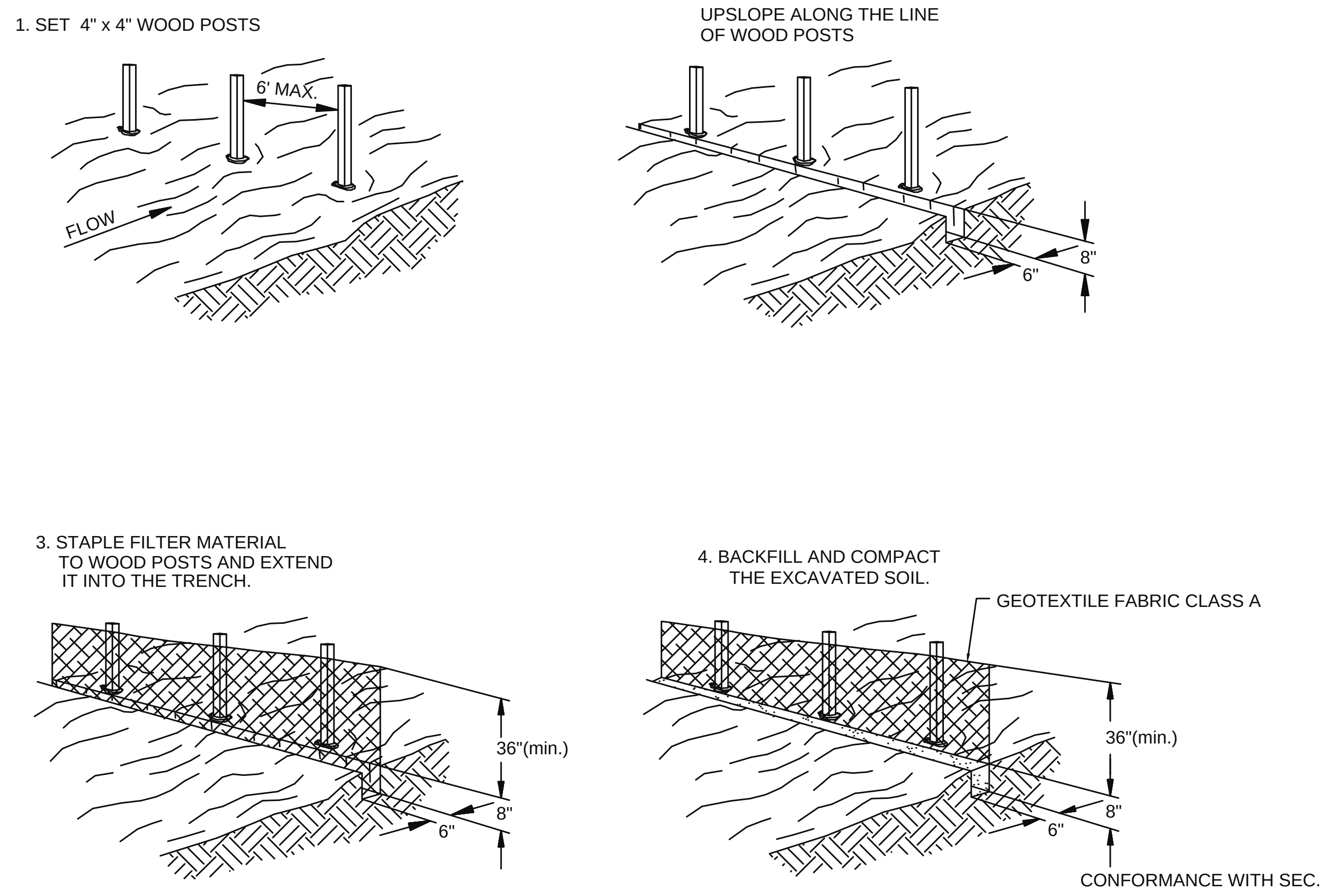
1. SET 4" x 4" WOOD POSTS

2. EXCAVATE A 8"X6" TRENCH UPSLOPE ALONG THE LINE OF WOOD POSTS

3. STAPLE FILTER MATERIAL TO WOOD POSTS AND EXTEND IT INTO THE TRENCH.

4. BACKFILL AND COMPACT THE EXCAVATED SOIL.

SHEET FLOW INSTALLATION

(PERSPECTIVE VIEW)

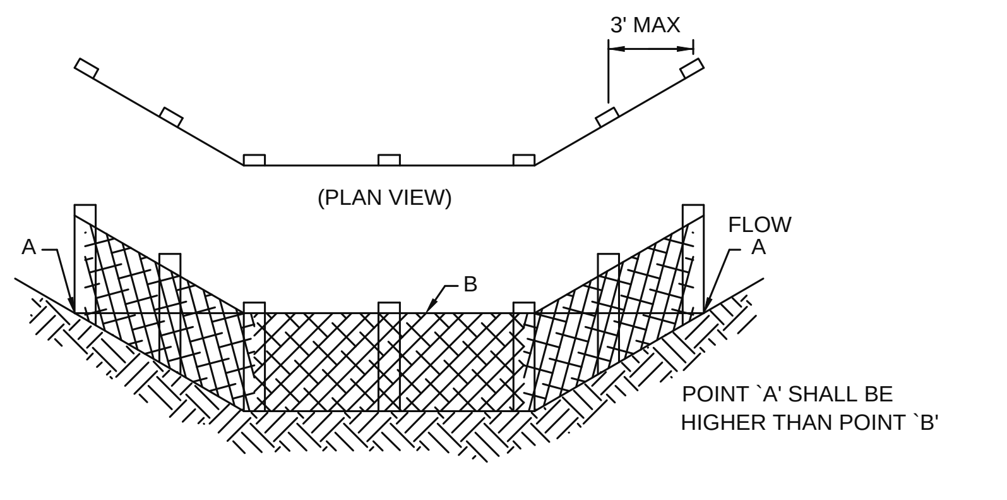

(FRONT ELEVATION)

DRAINAGEWAY INSTALLATION

NOTE: INSTALL IN ACCORDANCE WITH TEMPORARY SEDIMENT CONTROL FENCE, EXCEPT AS NOTED ABOVE.

FIGURE 2
SILT FENCE BARRIER

N.T.S.

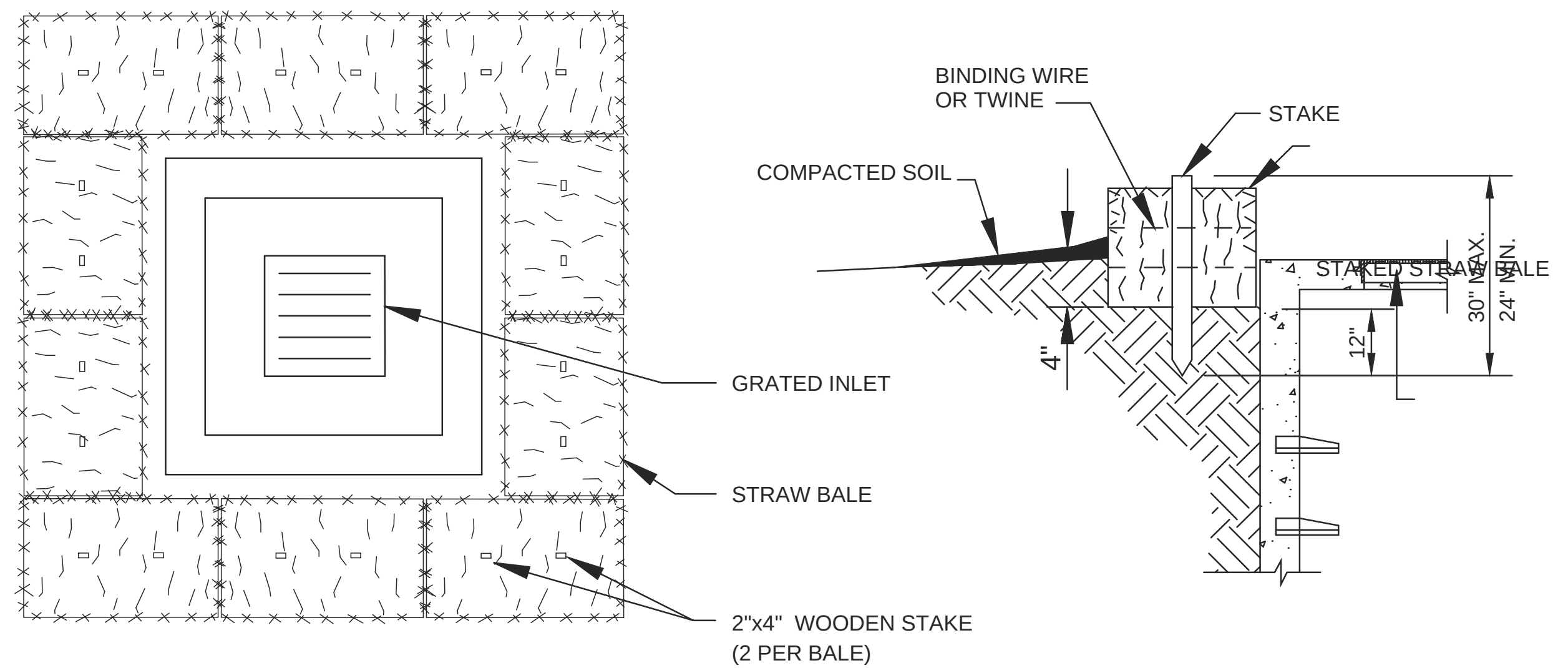

PLAN

ELEVATION

FIGURE 3
STRAW BALE INLET SEDIMENT FILTER

N.T.S.

EHA
ENGINEERING, PSC

OWNER / DEVELOPER

LOGO

PUERTO DEL REY

NO.	DESCRIPTION	DATE
	REVISION	05/07/21

CONSULTANTS

Nota Importante:

Yo, Edgardo Hernández Alvarado, ingeniero con licencia número 13930, certifico que soy el profesional que diseñó estos planos y las especificaciones complementarias.
También certifico que entiendo que dichos planos y especificaciones cumplen con las disposiciones aplicables del Reglamento Conjunto y las dispociciones aplicables de los Reglamentos y Códigos de las Agencias, Juntas Reglamentadoras o Corporaciones Públicas con jurisdicción. Reconozco que cualquier declaración falsa o falsificación de los hechos que se haya producido sin conocimiento o por negligencia ya sea por mí, mis agentes o empleados, o por otras personas con mi conocimiento, me hacen responsable de cualquier acción judicial y disciplinaria por la OGPe.

PROJECT NAME / NUMBER

MARINA
PUERTO DEL REY
STATE ROAD P.R. - 3
FAJARDO - P.R.

PROJECT NO.
.

TITLE

CES DETAILS

FILE TITLE:
DRAWN BY:
REVISED BY: EHA
PLOT SCALE: N.T.S.
DATE: JULY 2015

DRAWING NO.
CES-4

SHEET 13 OF 15

SEAL

IMPORTANT NOTE TO CONTRACTOR :

CONTRACTOR SHALL VERIFY ALL DIMENSIONS AND SITE CONDITIONS BEFORE PROCEEDING WITH WORK. IF ANY DISCREPANCIES, ERRORS OR OMISSIONS SHOULD BE ENCOUNTERED ON PLANS, CONTRACTOR SHALL NOTIFY OWNER AND/OR ARCHITECT BEFORE ANY PART OF THE WORK IS STARTED SO THAT PROPER CORRECTIONS ARE MADE. IF OWNER AND/OR ARCHITECT IS NOT NOTIFIED PRIOR TO COMMENCING OF THE WORK, THE CONTRACTOR SHALL BEAR FULL RESPONSIBILITY FOR ANY DISCREPANCIES, ERRORS AND/OR OMISSIONS.

ALL DESIGNS AND DRAWINGS HEREIN AND PRINTS ISSUED BY THE ARCHITECT ARE PROPERTY OF THE OWNER AND SHALL NOT BE REUSED ON ANY OTHER LOCATION EXCEPT THE ONE FOR WHICH THEY WERE EXPRESSLY DESIGNED.

ATTACHMENT M

Attachment N: Erosion Control Plan CES Details - 2

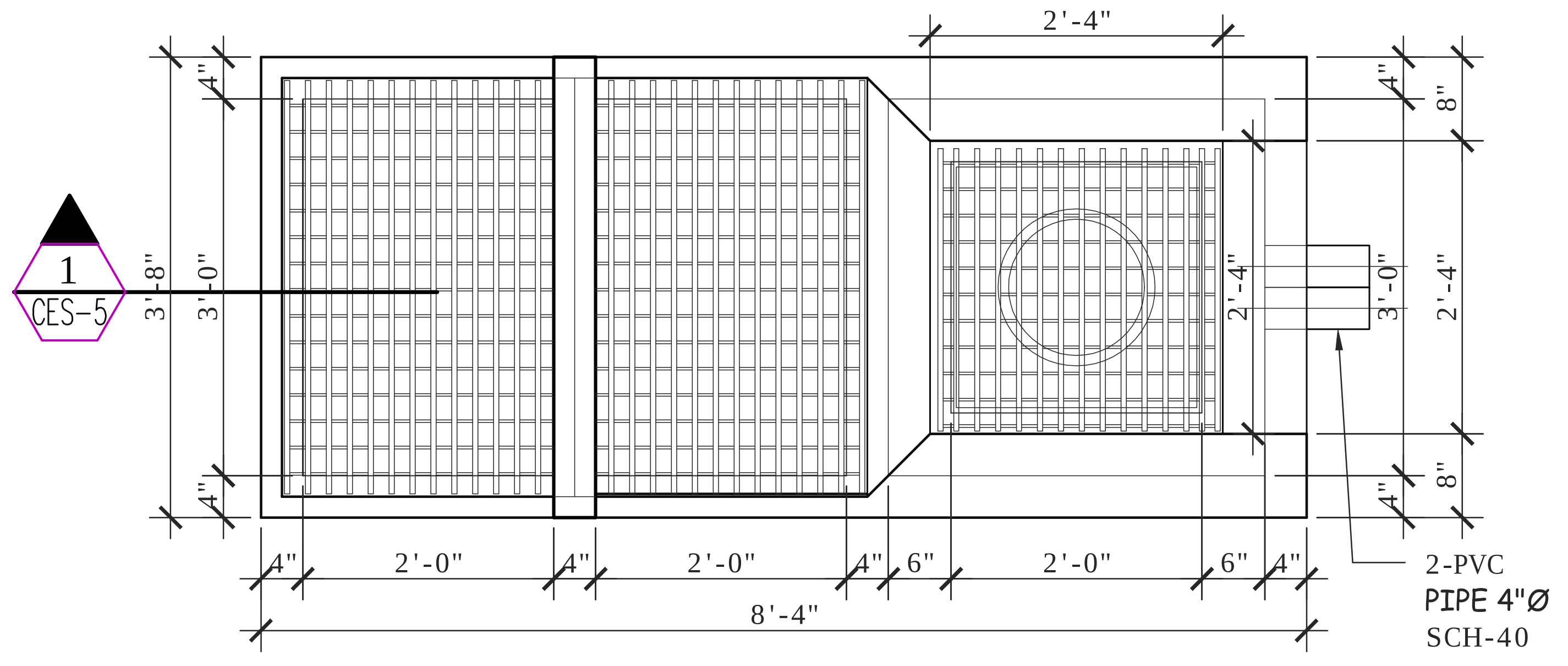

UFD-3A DETAIL (FLOOR PLAN)

SCALE: ¼"=1'-0"

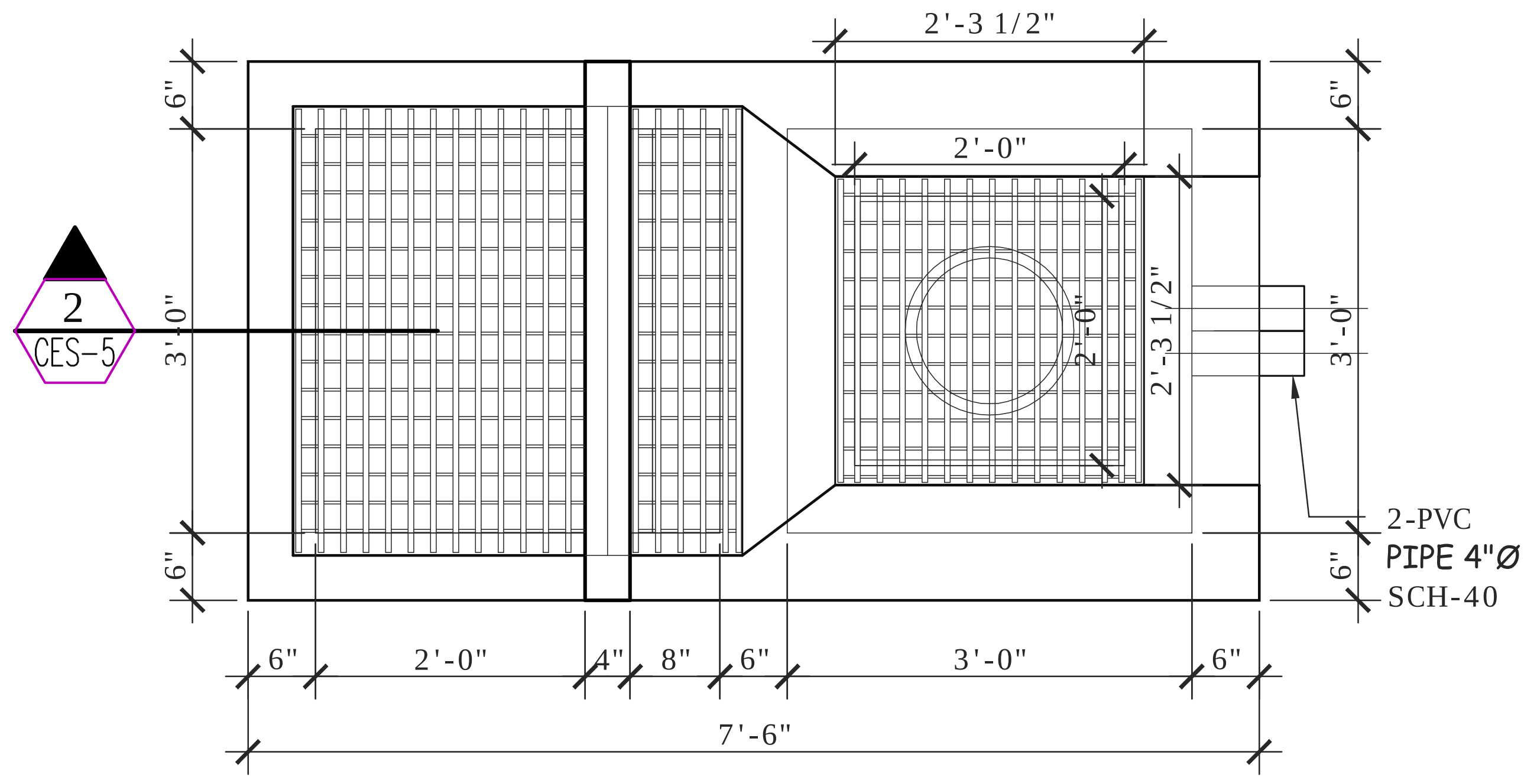

VA-5A DETAIL (FLOOR PLAN)

SCALE: ¼"=1'-0"

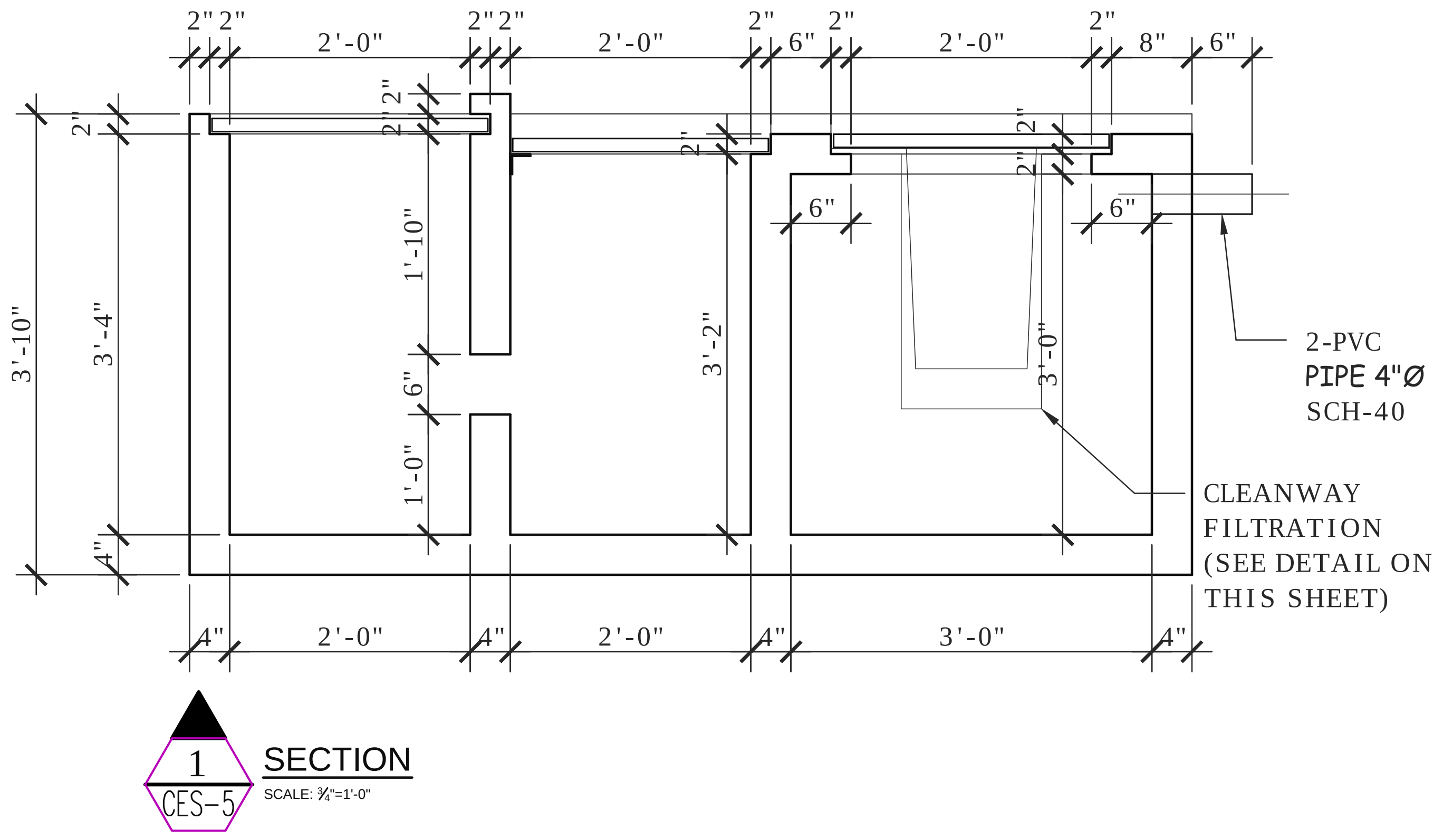

SECTION

SCALE: ¼"=1'-0"

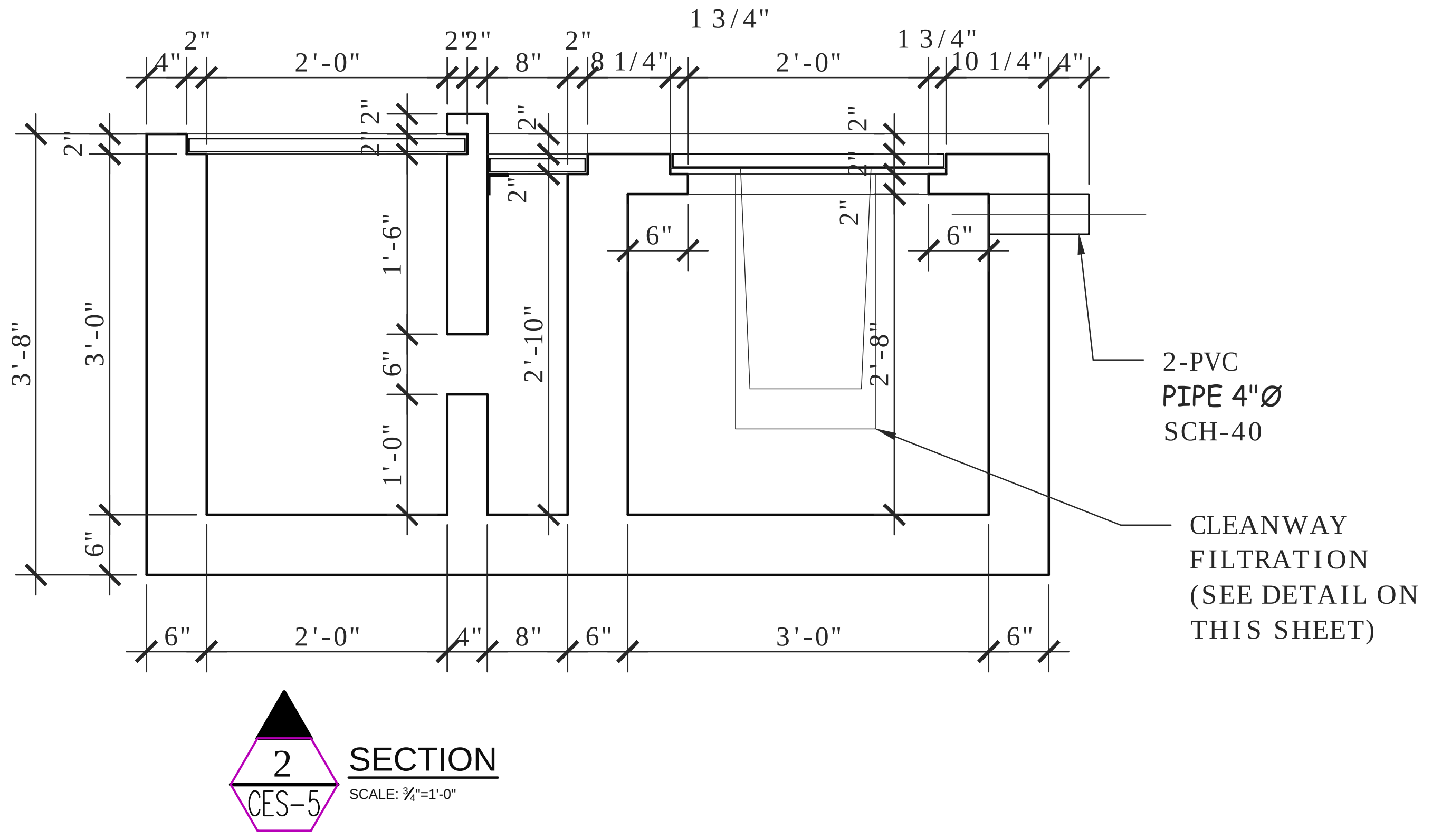

SECTION

SCALE: ¼"=1'-0"

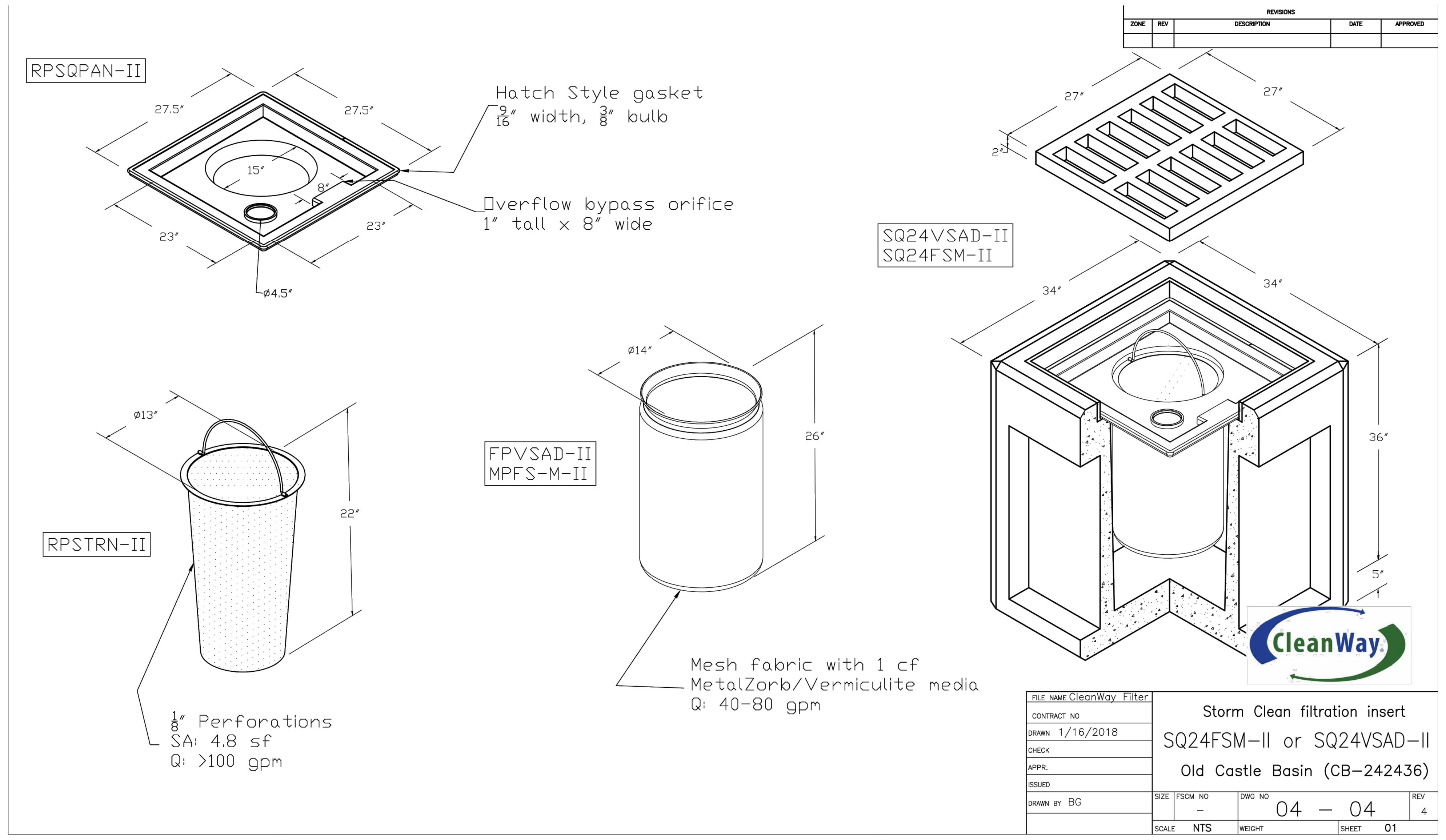

FILE NAME CleanWay Filter	Storm Clean filtration insert SQ24FSM–II or SQ24VSAD–II Old Castle Basin (CB–242436)
CONTRACT NO	
DRAWN 1/16/2018	
CHECK	
APPR.	
ISSUED	
DRAWN BY BG	SIZE / FSCM NO – / DWG NO 04 – 04 / REV 4
	SCALE NTS / WEIGHT / SHEET 01

CLEANWAY FILTRATION CUT WAY

N.T.S.

EHA
ENGINEERING, PSC

OWNER / DEVELOPER

.
.

LOGO

PUERTO DEL REY

NO.	DESCRIPTION	DATE
	REVISION	05/07/21

CONSULTANTS

Nota Importante:

Yo, Edgardo Hernández Alvarado, ingeniero con licencia número 13930, certifico que soy el profesional que diseñó estos planos y las especificaciones complementarias.
También certifico que entiendo que dichos planos y especificaciones cumplen con las disposiciones aplicables del Reglamento Conjunto y las dispociciones aplicablels de los Reglamentos y Códigos de las Agencias, Juntas Reglamentadoras o Corporaciones Públicas con jurisdicción. Reconozco que cualquier declaración falsa o falsificación de los hechos que se haya producido sin conocimiento o por negligencia ya sea por mí, mis agentes o empleados, o por otras personas con mi conocimiento, me hacen responsable de cualquier acción judicial y disciplinaria por la OGPe.

PROJECT NAME / NUMBER

MARINA
PUERTO DEL REY
STATE ROAD P.R. - 3
FAJARDO - P.R.

PROJECT NO.
.

TITLE

CES DETAILS

FILE TITLE:
DRAWN BY:
REVISED BY: EHA
PLOT SCALE: N.T.S.
DATE: JULY 2015

DRAWING NO.
CES-5

SHEET 14 OF 15

SEAL

ATTACHMENT N

Attachment O: Spill Kit Loacation

#	SYMBOL	ID
1	●	SPILL KIT LOCATION

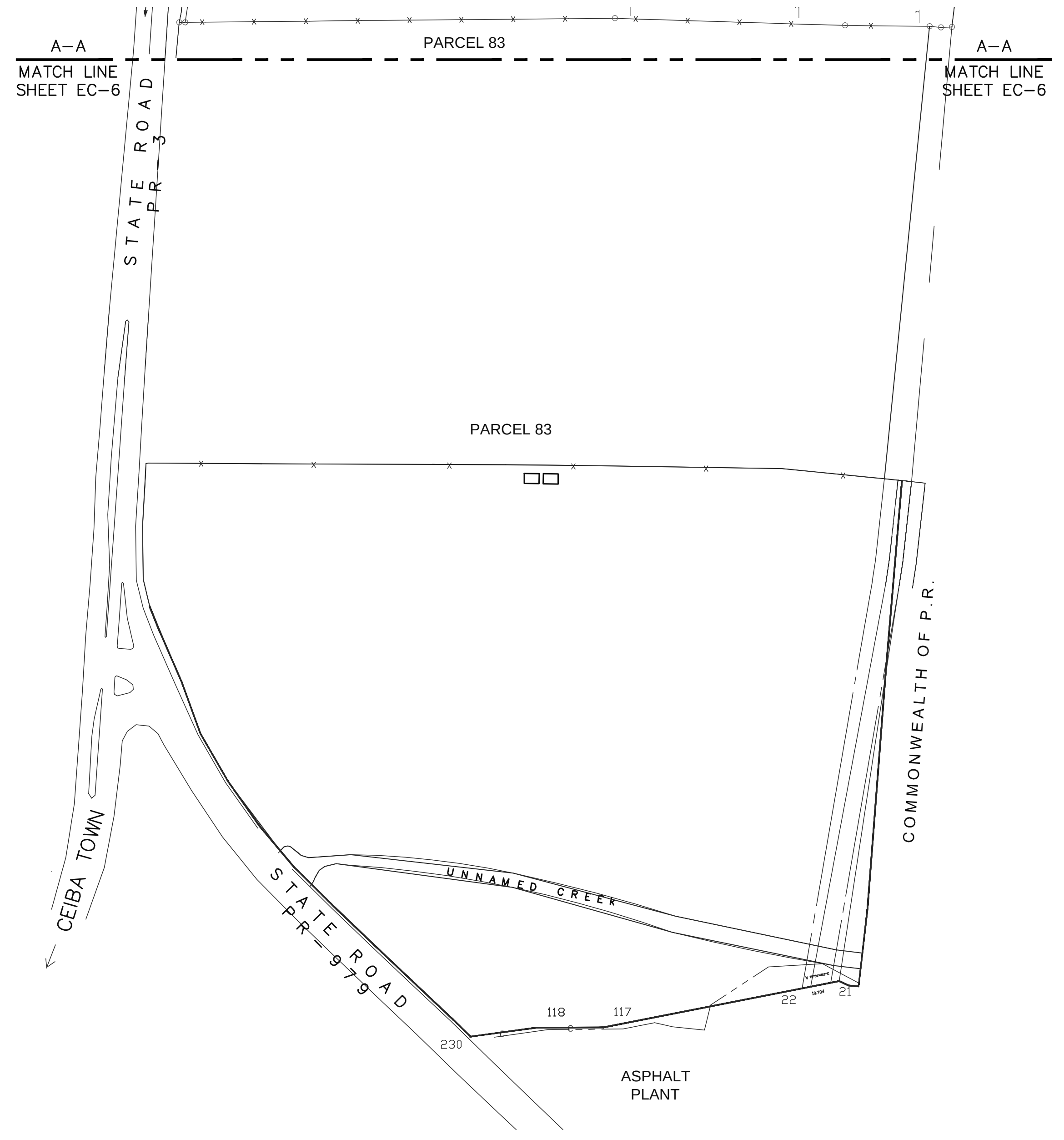

EHA
ENGINEERING, PSC

OWNER / DEVELOPER

LOGO

PUERTO DEL REY

NO.	DESCRIPTION	DATE
	REVISION	05/07/21

CONSULTANTS

Nota Importante:

Yo, Edgardo Hernández Alvarado, ingeniero con licencia número 13930, certifico que soy el profesional que diseñó estos planos y las especificaciones complementarias. También certifico que entiendo que dichos planos y especificaciones cumplen con las disposiciones aplicables del Reglamento Conjunto y las dispociciones aplicablels de los Reglamentos y Códigos de las Agencias, Juntas Reglamentadoras o Corporaciones Públicas con jurisdicción. Reconozco que cualquier declaración falsa o falsificación de los hechos que se haya producido sin conocimiento o por negligencia ya sea por mí, mis agentes o empleados, o por otras personas con mi conocimiento, me hacen responsable de cualquier acción judicial y disciplinaria por la OGPe.

PROJECT NAME / NUMBER

MARINA
PUERTO DEL REY
STATE ROAD P.R. - 3
FAJARDO - P.R.

PROJECT NO.

.

TITLE

CES PLAN-6
SILL KIT LOCATION

FILE TITLE:
DRAWN BY:
REVISED BY: EHA
PLOT SCALE: 1:2,000
DATE: JULY 2015

DRAWING NO.
CES-6

SHEET 15 OF 15

SEAL

ATTACHMENT O

Attachment P: Training, Inspections, Monitoring and Corrective Actions Report-Keeping Templates

Additional MSGP Documentation

For:

PUERTO DEL REY MARINA
4900 STATE ROAD PR-3 KM. 51.4
BO. DEMAJAGUA, FAJARDO, PR 00738
TEL.: (787) 860-1000

Contents

A. Employee Training

Training Date:	
Training Description:	
Trainer:	
Employee(s) trained	**Employee signature**

B. Maintenance

<u>Control Measure Maintenance Records</u> (copy information below for each control measure)

Control Measure (Name):
Regular Maintenance Activities (Describe):
Regular Maintenance Schedule:

Date of Maintenance Action:
Reason for Action: ☐ **Regular Maintenance** ☐ **Discovery of Problem**
If Problem,
- **Description of Action Required:**
- **Date Control Measure Returned to Full Function:**
- **Justification for Extended Schedule, if applicable:**

Notes:

<u>Industrial Equipment and Systems Maintenance Records</u> (copy information below for each industrial equipment/system)

Industrial Equipment/Systems:
Regular Maintenance Activities:
Regular Maintenance Schedule:

Date of Maintenance Action:
Reason for Action: ☐ **Regular Maintenance** ☐ **Discovery of Problem**
If Problem,
- **Description of Action Required:**
- **Date Industrial Equipment Returned to Full Function:**
- **Justification for Extended Schedule, if applicable:**

Notes:

C. Routine Facility Inspection Reports

Stormwater Industrial Routine Facility Inspection Report

General Information			
Facility Name	Puerto del Rey Marina		
NPDES Tracking No.	PRR053171		
Date of Inspection		**Start/End Time**	
Inspector's Name(s)			
Inspector's Title(s)			
Inspector's Contact Information			
Inspector's Qualifications			

Weather Information

Weather at time of this inspection?
☐ Clear ☐Cloudy ☐ Rain ☐ Sleet ☐ Fog ☐ Snow ☐ High Winds
☐ Other: Temperature:

Have any previously unidentified discharges of pollutants occurred since the last inspection? ☐Yes ☐No
If yes, describe:

Are there any discharges occurring at the time of inspection? ☐Yes ☐No
If yes, describe:

	Structural Control Measure	Control Measure is Operating Effectively?	If No, In Need of Maintenance, Repair, or Replacement?	Maintenance or Corrective Action Needed and Notes
1	Silt Fences	☐Yes ☐No	☐ Maintenance ☐ Repair ☐ Replacement	
2	Berms	☐Yes ☐No	☐ Maintenance ☐ Repair ☐ Replacement	
3	Hay Bales or Tube	☐Yes ☐No	☐ Maintenance ☐ Repair ☐ Replacement	
4	Impervious Tarp	☐Yes ☐No	☐ Maintenance ☐ Repair ☐ Replacement	
5	Inlet Filter	☐Yes ☐No	☐ Maintenance ☐ Repair ☐ Replacement	
6	Retention Pond	☐Yes ☐No	☐ Maintenance ☐ Repair ☐ Replacement	
7	Detention Pond	☐Yes ☐No	☐ Maintenance ☐ Repair ☐ Replacement	
8	Catch Basin	☐Yes ☐No	☐ Maintenance ☐ Repair ☐ Replacement	
9	Sediment Bag	☐Yes ☐No	☐ Maintenance ☐ Repair ☐ Replacement	

	Structural Control Measure	Control Measure is Operating Effectively?	If No, In Need of Maintenance, Repair, or Replacement?	Maintenance or Corrective Action Needed and Notes
10	Metal Zorb Filter	☐Yes ☐No	☐ Maintenance ☐ Repair ☐ Replacement	

	Area/Activity	Inspected?	Controls Adequate (appropriate, effective and operating)?	Maintenance or Corrective Action Needed and Notes
1	**Material loading/unloading and storage areas**	☐Yes ☐No ☐ N/A	☐Yes ☐No	
2	**Equipment operations and maintenance areas**	☐Yes ☐No ☐ N/A	☐Yes ☐No	
3	**Fueling areas**	☐Yes ☐No ☐ N/A	☐Yes ☐No	
4	**Outdoor vehicle and equipment washing areas**	☐Yes ☐No ☐ N/A	☐Yes ☐No	
5	**Waste handling and disposal areas**	☐Yes ☐No ☐ N/A	☐Yes ☐No	
6	**Erodible areas/construction**	☐Yes ☐No ☐ N/A	☐Yes ☐No	
7	**Non-stormwater/ illicit connections**	☐Yes ☐No ☐ N/A	☐Yes ☐No	
8	**Dust generation and vehicle tracking**	☐Yes ☐No ☐ N/A	☐Yes ☐No	
9	**Processing areas**	☐Yes ☐No ☐ N/A	☐Yes ☐No	
10	**Areas where industrial activity has taken place in the past and significant materials remain and are exposed to storm water**	☐Yes ☐No ☐ N/A	☐Yes ☐No	
11	**Immediate access roads and rail lines used or traveled by carriers of raw materials, manufactured products, waste material, or by-products used or created by the facility**	☐Yes ☐No ☐ N/A	☐Yes ☐No	
12	**(Other)**	☐Yes ☐No ☐ N/A	☐Yes ☐No	
13	**(Other)**	☐Yes ☐No ☐ N/A	☐Yes ☐No	

PDR Varadero – Non-Compliance Photos:

Varadero	
Photo #1:	Photo #2:

PDR Boatyard – Non-Compliance Photos:

15 “Cuerdas” Boatyard	
Photo #1:	Photo #2:

FREQUENTLY MAINTENACE PROCEDURES REQUIREMENTS

1. All controls must always be kept clean form sediment to ensure proper operation. Accumulated sediment must be collected and properly disposed with the rest of the trash picked up as part of the regular maintenance good housekeeping procedures. Controls includes:
    a. Catch basins
    b. Catch basins filters
    c. Grates
    d. Curbs
    e. Filter bags
    f. Swales with silt fences and sediment logs or hay bales
2. Stormwater and graywater pumps must be operational at all time and must be ready to be switched on when boat cleaning and maintenance is undergoing in each area where the pumps are located.
3. Pump lights must turn on when the pump system is turned on. Environmental inspectors must be able to ensure pumps are powered and that floats are operating properly.
4. Ground must always be kept clean. Every time a stained area is identified stained soil must be collected and properly disposed with the rest of the thrash picked up as part of the regular maintenance good housekeeping procedures. Removed soil must be substituted with clean new material.

5. Silt fences must always be kept firmly stretched and embedded into the ground to prevent from stormwater to flow underneath it.
6. Hay bales and sediment logs must always be kept in good conditions firm ly fixed to the ground to prevent from stormwater to flow underneath it or moving it form its location.
7. Clean Way filtration on catch basin with three chambers of sediment collection.
    a. In the first and second chamber:
        i. Remove the grates.
        ii. Remove and clean the dandy sack filter of the first chamber.
        iii. Collect the accumulated sediment from the filters and inside the chambers and properly dispose it with the rest of the trash picked up as part of the regular maintenance good housekeeping procedures.
    b. In the third chamber
        i. Remove the grate, remove the rigid strainer using the handle.
        ii. Collect the accumulated sediment and properly dispose it with the rest of the trash picked up as part of the regular maintenance good housekeeping procedures.
    c. Remove the metal zorb filter, collect any sediment and dispose it with the rest of the trash picked up as part of the regular maintenance good housekeeping procedures.
    d. Reinstall the system components.

We CERTIFY that this STORMWATER INDUSTRIAL ROUTINE FACILITY INSPECTION REPORT, was prepared using our best criteria and that all information provided is correct as we understand.

Prepared by: ____

Name Position Signature Date

Revised by: ____

Name Position Signature Date

D. Quarterly Visual Assessment Reports

Refer to next page.

MSGP Quarterly Visual Assessment Form

(Complete a separate form for each outfall you assess)

Name of Facility: Puerto del Rey Marina NPDES Tracking No. PRR053171

Outfall Name: "Substantially Identical Discharge Point"? ☐ Yes (identify substantially identical outfalls): ☐ No

Person(s)/Title(s) collecting sample:

Person(s)/Title(s) examining sample:

Date & Time Discharge Began: Date & Time Sample Collected: . If sample not taken within first 30 minutes, explain why. Date & Time Sample Examined:

Substitute Sample? ☐ No ☐ Yes (identify quarter/year when sample was originally scheduled to be collected):

Nature of Discharge: ☐ Rainfall ☐ Snowmelt

If rainfall: Rainfall Amount: Previous Storm Ended > 72 hours Before Start of This Storm? ☐ Yes ☐ No* (explain):

Pollutants Observed

Color ☐ None ☐ Other (describe): ______________________

Odor ☐ None ☐ Musty ☐ Sewage ☐ Sulfur ☐ Sour ☐ Petroleum/Gas
☐ Solvents ☐ Other (describe): ______________________

Clarity ☐ Clear ☐ Slightly Cloudy ☐ Cloudy ☐ Opaque ☐ Other

Floating Solids ☐ No ☐ Yes (describe): ______________________

Settled Solids** ☐ No ☐ Yes (describe): ______________________

Suspended Solids ☐ No ☐ Yes (describe): ______________________

Foam (gently shake sample) ☐ No ☐ Yes (describe): ______________________

Oil Sheen ☐ None ☐ Flecks ☐ Globs ☐ Sheen ☐ Slick
☐ Other (describe): ______________________

Other Obvious Indicators of Stormwater Pollution ☐ No ☐ Yes (describe): ______________________

* The 72-hour interval can be waived when the previous storm did not yield a measurable discharge or if you are able to document (attach applicable documentation) that less than a 72-hour interval is representative of local storm events during the sampling period.

** Observe for settled solids after allowing the sample to sit for approximately one-half hour.

Identify probably sources of any observed stormwater contamination. Also, include any additional comments, descriptions of pictures taken, and any corrective actions necessary below (attach additional sheets as necessary).

Certification Statement (Refer to MSGP Subpart 11 Appendix B for Signatory Requirements)

I certify under penalty of law that this document and all attachments were prepared under my direction or supervision in accordance with a system designed to assure that qualified personnel properly gathered and evaluated the information submitted. Based on my inquiry of the person or persons who manage the system, or those persons directly responsible for gathering the information, the information submitted is, to the best of my knowledge and belief, true, accurate, and complete. I am aware that there are significant penalties for submitting false information, including the possibility of fine and imprisonment for knowing violations.

A. Name: B. Title:

C. Signature: D. Date Signed:

E. Monitoring results

F. Deviations from assessment or monitoring schedule

Date:
☐ **Visual assessments** ☐ **Monitoring**
Describe deviation from schedule:
Reason for deviation:

Date:
☐ **Visual assessments** ☐ **Monitoring**
Describe deviation from schedule:
Reason for deviation:

Date:
☐ **Visual assessments** ☐ **Monitoring**
Describe deviation from schedule:
Reason for deviation:

Date:
☐ **Visual assessments** ☐ **Monitoring**
Describe deviation from schedule:
Reason for deviation:

G. Corrective Action Documentation

Description of Condition:
For Spills and Leaks:
Description of Incident:
Material:
Date/Time:
Amount:
Location:
Reason for Spill:
Discharge to Waters of U.S.:

Date:
Immediate Actions:
Actions Taken within 14 Days:
14 Day Infeasibility:
45 Day Extension:

H. Benchmark Exceedances

Date:
Pollutant Exceeded and Results:
Quarter 1 (Sample date:) Result:
Quarter 2 (Sample date:) Result:
Quarter 3 (Sample date:) Result:
Quarter 4 (Sample date:) Result:
Average Result:
Benchmark Value:

Document how benchmark exceedance(s) responded to:
☐ **Corrective action review completed** (ensure documentation is included in section G of this Template)

☐ **Finding that the exceedance was due to natural background pollutant levels**
Pollutant(s): Insert Pollutant
Attach data and/or studies that tie the presence of the pollutant causing the exceedance in your discharge to natural background sources in the watershed.

☐ **Determination from EPA Regional Office that benchmark monitoring can be discontinued because the exceedance was due to run-on**
Pollutant(s): Insert Pollutant
Attach documentation from EPA Regional Office.

☐ **Finding that no further pollutant reductions are technologically available and economically practicable and achievable in light of best industry practice consistent with Part 6.2.1.2.**
Pollutant(s): Insert Pollutant
Attach documentation supporting this finding.

I. Impaired Waters Monitoring: Documentation of Natural Background Sources or Non-Presence of Impairment Pollutant

Date:

Check one of the boxes below and complete the additional documentation:

☐ **#1 – Pollutant(s) for which the water is impaired is not present and not expected to be present in your discharge**

Attach documentation that the impairment pollutant(s) was not detected in your discharge sample(s).

☐ **#2 – Pollutant(s) for which the water is impaired is present, but you have determined its presence is caused solely by natural background sources.**

Attach the following documentation:

- An explanation of why you believe that the presence of the pollutant(s) causing the impairment in your discharge is not related to the activities at your facility; and
- Data and/or studies that tie the presence of the pollutant(s) causing the impairment in your discharge to natural background sources in the watershed.

J. Active/Inactive status change

Date:
New Facility Status: ☐ **Inactive and Unstaffed** ☐ **Active**
Reason for change in status:

K. SWPPP Amendment Log

Amend. No.	Description of the Amendment	Date of Amendment	Amendment Prepared by [Name(s) and Title]
1			
2			
3			
4			
5			
6			
7			
8			
9			
10			
11			

L. Miscellaneous Documentation

Attachment Q: 40 CFR Part 136

SUBCHAPTER D—WATER PROGRAMS (CONTINUED)

PART 136—GUIDELINES ESTABLISHING TEST PROCEDURES FOR THE ANALYSIS OF POLLUTANTS

AUTHORITY: Secs. 301, 304(h), 307 and 501(a), Pub. L. 95–217, 91 Stat. 1566, *et seq.* (33 U.S.C. 1251, *et seq.*) (the Federal Water Pollution Control Act Amendments of 1972 as amended by the Clean Water Act of 1977).

§ 136.1 Applicability.

(a) The procedures prescribed herein shall, except as noted in § 136.5, be used to perform the measurements indicated whenever the waste constituent specified is required to be measured for:

(1) An application submitted to the Administrator, or to a State having an approved NPDES program for a permit under section 402 of the Clean Water Act of 1977, as amended (CWA), and/or to reports required to be submitted under NPDES permits or other requests for quantitative or qualitative effluent data under parts 122 to 125 of title 40, and,

(2) Reports required to be submitted by dischargers under the NPDES established by parts 124 and 125 of this chapter, and,

(3) Certifications issued by States pursuant to section 401 of the CWA, as amended.

(b) The procedure prescribed herein and in part 503 of title 40 shall be used to perform the measurements required for an application submitted to the Administrator or to a State for a sewage sludge permit under section 405(f) of the Clean Water Act and for recordkeeping and reporting requirements under part 503 of title 40.

[72 FR 14224, Mar. 26, 2007]

§ 136.2 Definitions.

As used in this part, the term:

(a) *Act* means the Clean Water Act of 1977, Pub. L. 95–217, 91 Stat. 1566, *et seq.* (33 U.S.C. 1251 *et seq.*) (The Federal Water Pollution Control Act Amendments of 1972 as amended by the Clean Water Act of 1977).

(b) *Administrator* means the Administrator of the U.S. Environmental Protection Agency.

(c) *Regional Administrator* means one of the EPA Regional Administrators.

(d) *Director* means the Director of the State Agency authorized to carry out an approved National Pollutant Discharge Elimination System Program under section 402 of the Act.

(e) *National Pollutant Discharge Elimination System (NPDES)* means the national system for the issuance of permits under section 402 of the Act and includes any State or interstate program which has been approved by the Administrator, in whole or in part, pursuant to section 402 of the Act.

(f) *Detection limit* means the minimum concentration of an analyte (substance) that can be measured and reported with a 99% confidence that the analyte concentration is greater than zero as determined by the procedure set forth at appendix B of this part.

[38 FR 28758, Oct. 16, 1973, as amended at 49 FR 43250, Oct. 26, 1984]

§ 136.3 Identification of test procedures.

(a) Parameters or pollutants, for which methods are approved, are listed together with test procedure descriptions and references in Tables IA, IB, IC, ID, IE, IF, IG, and IH. In the event of a conflict between the reporting requirements of 40 CFR Parts 122 and 125 and any reporting requirements associated with the methods listed in these tables, the provisions of 40 CFR Parts 122 and 125 are controlling and will determine a permittee's reporting requirements. The full text of the referenced test procedures are incorporated by reference into Tables IA, IB, IC, ID, IE, IF, IG, and IH. The incorporation by reference of these documents, as specified in paragraph (b) of this section, was approved by the Director of the Federal Register in accordance with 5 U.S.C. 552(a) and 1 CFR part 51. Copies of the documents may be obtained from the sources listed in paragraph (b) of this section. Documents may be inspected at EPA's Water Docket, EPA West, 1301 Constitution Avenue, NW., Room B102, Washington, DC (Telephone: 202–566–2426); or at the National Archives and Records Administration (NARA). For information on the availability of this material at NARA, call 202–741–6030, or go to: *http://www.archives.gov/federal_register/code_of_federal_regulations/ibr_locations.html*. These test procedures are incorporated as they exist on the day of approval and a notice of any change in these test procedures will be published in the FEDERAL REGISTER. The discharge parameter values for which reports are required must be determined by one of the standard analytical test procedures incorporated by reference and described in Tables IA, IB, IC, ID, IE, IF, IG, and IH or by any alternate test procedure which has been approved by the Administrator under the provisions of paragraph (d) of this section and §§136.4 and 136.5. Under certain circumstances paragraph (c) of this section, §136.5(a) through (d) or 40 CFR 401.13, other additional or alternate test procedures may be used.

TABLE IA—LIST OF APPROVED BIOLOGICAL METHODS FOR WASTEWATER AND SEWAGE SLUDGE

Parameter and units	Method[1]	EPA	Standard methods 18th, 19th, 20th ed.	Standard methods on-line	AOAC, ASTM, USGS	Other
Bacteria:						
1. Coliform (fecal), number per 100 mL or number per gram dry weight.	Most Probable Number (MPN),[5] tube 3 dilution, or	p. 132[3] 1680[12,14] 1681[12,19]	9221 C E	9221 C E–99.		
	Membrane filter (MF)[2], single step.	p. 124[3]	9222 D	9222 D–97	B–0050–85[5].	
2. Coliform (fecal) in presence of chlorine, number per 100 mL.	MPN, 5 tube, 3 dilution, or	p. 132[3]	9221 C E	9221 C E–99.		
	MF[2], single step	p. 124[3]	9222 D	9222 D–97.		
3. Coliform (total), number per 100 mL.	MPN, 5 tube, 3 dilution, or	p. 114[3]	9221 B	9221 B–99.		
	MF[2], single step or two step	p. 108[3]	9222 B	9222 B–97	B–0025–8[5].	
4. Coliform (total), in presence of chlorine, number per 100 mL.	MPN, 5 tube, 3 dilution, or	p. 114[3]	9221 B	9221 B–99.		
	MF[2] with enrichment	p. 111[3]	9222 (B+B.5c)	9222 (B+B.5c) – 97.		
5. *E. coli*, number per 100 mL[20].	MPN[7,9,15] multiple tube/multiple well.		9223 B[13]	9223 B–97[13]	991.15[11]	Colilert®[13,17] Colilert-18®[13,16,17]
	MF[2,6,7,8,9] single step	1603[21]				mColiBlue-24®[18]
6. Fecal streptococci, number per 100 mL.	MPN, 5 tube 3 dilution,	p. 139[3]	9230 B	9230 B–93.		
	MF[2], or	p. 136[3]	9230 C	9230 C–93	B–0055–85[5].	
	Plate count	p. 143[3].				
7. Enterococci, number per 100 mL[20].	MPN[7,9], multiple tube/multiple well.				D6503–99[10]	Enterolert®[13,23]
	MF[2,6,7,8,9] single step	1600[24].				
8. Salmonella, number per gram dry weight[12].	MPN multiple tube	1682[22].				
Aquatic Toxicity:						
9. Toxicity, acute, fresh water organisms, LC_{50}, percent effluent.	*Ceriodaphnia dubia* acute	2002.0[25].				
	Daphnia puplex and *Daphnia magna* acute.	2021.0[25].				
	Fathead Minnow, *Pimephales promelas*, and Bannerfin *shiner*, *Cyprinella leedsi*, acute.	2000.0[25].				
	Rainbow Trout, *Oncorhynchus mykiss*, and brook trout, *Salvelinus fontinalis*, acute.	2019.0[25].				

TABLE IA—LIST OF APPROVED BIOLOGICAL METHODS FOR WASTEWATER AND SEWAGE SLUDGE—Continued

Parameter and units	Method[1]	EPA	Standard methods 18th, 19th, 20th ed.	Standard methods on-line	AOAC, ASTM, USGS	Other
10. Toxicity, acute, estuarine and marine organisms of the Atlantic Ocean and Gulf of Mexico, LC$_{50}$, percent effluent.	Mysid, *Mysidopsis bahia*, acute	2007.0[25].				
	Sheepshead Minnow, *Cyprinodon* variegatus, acute.	2004.0[25].				
	Silverside, *Menidia beryllina*, *Menidia menidia*, and *Menidia peninsulae*, acute.	2006.0[25].				
11. Toxicity, chronic, fresh water organisms, NOEC or IC$_{25}$, percent effluent.	Fathead minnow, *Pimephales promelas*, larval survival and growth.	1000.0[26].				
	Fathead minnow, *Pimephales promelas*, embryo-larval survival and teratogenicity.	1001.0[26].				
	Daphnia, *Ceriodaphnia dubia*, survival and reproduction.	1002.0[26].				
	Green alga, *Selenastrum capricornutum*, growth.	1003.0[26].				
12. Toxicity, chronic, estuarine and marine organisms of the Atlantic Ocean and Gulf of Mexico, NOEC or IC$_{25}$, percent effluent.	Sheepshead minnow, *Cyprinodon variegatus*, larval survival and growth.	1004.0[27].				
	Sheepshed minnow, *Cyprinodon variegatus*, embryo-larval survival and teratogenicity.	1005.0[27].				
	Inland silverside, *Menidia beryllina*, larval survival and growth.	1006.0[27].				
	Mysid, *Mysidopsis bahia*, survival, growth, and fecundity.	1007.0[27].				
	Sea urchin, *Arbacia punctulata*, fertilization.	1008.0[27].				

---

[1] The method must be specified when results are reported.

[2] A 0.45 µm membrane filter (MF) or other pore size certified by the manufacturer to fully retain organisms to be cultivated and to be free of extractables which could interfere with their growth.

[3] USEPA. 1978. Microbiological Methods for Monitoring the Environment, Water, and Wastes. Environmental Monitoring and Support Laboratory, U.S. Environmental Protection Agency, Cincinnati, OH, EPA/600/8–78/017.

[4] [Reserved]

[5] USGS. 1989. U.S. Geological Survey Techniques of Water-Resource Investigations, Book 5, Laboratory Analysis, Chapter A4, Methods for Collection and Analysis of Aquatic Biological and Microbiological Samples, U.S. Geological Survey, U.S. Department of the Interior, Reston, VA.

[6] Because the MF technique usually yields low and variable recovery from chlorinated wastewaters, the Most Probable Number method will be required to resolve any controversies.

[7] Tests must be conducted to provide organism enumeration (density). Select the appropriate configuration of tubes/filtrations and dilutions/volumes to account for the quality, character, consistency, and anticipated organism density of the water sample.

[8] When the MF method has been used previously to test waters with high turbidity, large numbers of noncoliform bacteria, or samples that may contain organisms stressed by chlorine, a parallel test should be conducted with a multiple-tube technique to demonstrate applicability and comparability of results.

[9] To assess the comparability of results obtained with individual methods, it is suggested that side-by-side tests be conducted across seasons of the year with the water samples routinely tested in accordance with the most current Standard Methods for the Examination of Water and Wastewater or EPA alternate test procedure (ATP) guidelines.

[10] ASTM. 2000, 1999, 1996. Annual Book of ASTM Standards—Water and Environmental Technology. Section 11.02. ASTM International. 100 Barr Harbor Drive, West Conshohocken, PA 19428.

[11] AOAC. 1995. Official Methods of Analysis of AOAC International, 16th Edition, Volume I, Chapter 17. Association of Official Analytical Chemists International. 481 North Frederick Avenue, Suite 500, Gaithersburg, MD 20877–2417.

[12] Recommended for enumeration of target organism in sewage sludge.

[13] These tests are collectively known as defined enzyme substrate tests, where, for example, a substrate is used to detect the enzyme β-glucuronidase produced by *E. coli*.

[14] USEPA. July 2006. Method 1680: Fecal Coliforms in Sewage Sludge (Biosolids) by Multiple-Tube Fermentation Using Lauryl-Tryptose Broth (LTB) and EC Medium. US Environmental Protection Agency, Office of Water, Washington, DC EPA–821–R–06–012.

[15] Samples shall be enumerated by the multiple-tube or multiple-well procedure. Using multiple-tube procedures, employ an appropriate tube and dilution configuration of the sample as needed and report the Most Probable Number (MPN). Samples tested with Colilert® may be enumerated with the multiple-well procedures, Quanti-Tray® Quanti-Tray® 2000, and the MPN calculated from the table provided by the manufacturer.

[16] Colilert-18® is an optimized formulation of the Colilert® for the determination of total coliforms and *E. coli* that provides results within 18 h of incubation at 35 °C rather than the 24 h required for the Colilert® test and is recommended for marine water samples.

[17] Descriptions of the Colilert®, Colilert-18®, Quanti-Tray®, and Quanti-Tray®/2000 may be obtained from IDEXX Laboratories, Inc., 1 IDEXX Drive, Westbrook, ME 04092.

[18] A description of the mColiBlue24® test, Total Coliforms and *E. coli*, is available from Hach Company, 100 Dayton Ave., Ames, IA 50010.

[19] USEPA. July 2006. Method 1681: Fecal Coliforms in Sewage Sludge (Biosolids) by Multiple-Tube Fermentation using A–1 Medium. U.S. Environmental Protection Agency, Office of Water, Washington, DC EPA–821–R–06–013.

[20] Recommended for enumeration of target organism in wastewater effluent.

[21] USEPA. July 2006. Method 1603: *Escherichia coli* (*E. coli*) in Water by Membrane Filtration Using Modified membrane-Thermotolerant *Escherichia coli* Agar (modified mTEC). U.S. Environmental Protection Agency, Office of Water, Washington, DC EPA–821–R–06–011.

[22] USEPA. July 2006. Method 1682: *Salmonella* in Sewage Sludge (Biosolids) by Modified Semisolid Rappaport-Vassiliadis (MSRV) Medium. U.S. Environmental Protection Agency, Office of Water, Washington, DC EPA–821–R–06–014.

[23] A description of the Enterolert® test may be obtained from IDEXX Laboratories, Inc., 1 IDEXX Drive, Westbrook, ME 04092.

[24] USEPA. July 2006. Method 1600: Enterococci in Water by Membrane Filtration Using membrane-Enterococcus Indoxyl-β-D-Glucoside Agar (mEI). U.S. Environmental Protection Agency, Office of Water, Washington, DC EPA–821–R–06–009.

[25] USEPA. October 2002. Methods for Measuring the Acute Toxicity of Effluents and Receiving Waters to Freshwater and Marine Organisms. Fifth Edition. U.S. Environmental Protection Agency, Office of Water, Washington, DC EPA/821/R–02/012.

[26] USEPA. October 2002. Short-term Methods for Estimating the Chronic Toxicity of Effluents and Receiving Waters to Freshwater Organisms. Fourth Edition, U.S. Environmental Protection Agency, Office of Water, Washington, DC EPA/821/R–02/013.

[27] USEPA. October 2002. Short-term Methods for Estimating the Chronic Toxicity of Effluents and Receiving Waters to Marine and Estuarine Organisms. Third Edition. U.S. Environmental Protection Agency, Office of Water, Washington, DC EPA/821/R–02/014.

TABLE IB—LIST OF APPROVED INORGANIC TEST PROCEDURES

Parameter	Methodology[58]	Reference (method number or page)					
		EPA[35, 52]	Standard methods (18th, 19th)	Standard methods (20th)	Standard methods online	ASTM	USGS/AOAC/ other
1. Acidity, as $CaCO_3$, mg/L.	Electrometric endpoint or phenolphthalein endpoint.	....	2310 B(4a)	2310 B(4a)	2310 B(4a)–97 ...	D1067–92, 02	I–1020–85[2]

TABLE IB—LIST OF APPROVED INORGANIC TEST PROCEDURES—Continued

Parameter	Methodology[58]	Reference (method number or page)					
		EPA[35, 52]	Standard methods (18th, 19th)	Standard methods (20th)	Standard methods online	ASTM	USGS/AOAC/ other
2. Alkalinity, as $CaCO_3$, mg/L.	Electrometric or Colorimetric titration to pH 4.5, manual, or	....	2320 B	2320 B	2320 B–97	D1067–92, 02	973.43[3], I–1030–85[2]
	automatic	310.2 (Rev. 1974)[1].	....	....	....	....	I–2030–85[2]
3. Aluminum—Total,[4] mg/L.	Digestion[4] followed by:						
	AA direct aspiration[36].	....	3111 D	....	3111 D–99	....	I–3051–85[2]
	AA furnace	....	3113 B	....	3113 B–99.		
	STGFAA	200.9, Rev. 2.2 (1994).					
	ICP/AES[36]	200.7, Rev. 4.4 (1994).	3120 B	3120 B	3120 B–99	....	I–4471–9750
	ICP/MS	200.8, Rev. 5.4 (1994).	....	....	....	D5673–03	993.14[3]
	Direct Current Plasma (DCP)[36].	....	....	....	....	D4190–94, 99	See footnote[34]
	Colorimetric (Eriochrome cyanine R).	....	3500–Al D	3500–Al B	3500–Al B–01.		
4. Ammonia (as N), mg/L	Manual, distillation (at pH 9.5)[6] followed by:	350.1, Rev. 2.0 (1993).	4500–NH B_3	4500–NH_3 B	4500–NH_3 B–97	....	973.49[3]
	Nesslerization	....	4500–NH_3 C (18th only).	....	....	D1426–98, 03 (A).	973.49[3], I–3520–85[2]
	Titration	....	4500–NH_3 C (19th) and 4500–NH_3 E (18th).	4500–NH_3 C	4500–NH_3 C–97.		
	Electrode	....	4500–NH_3 D or E (19th) and 4500–NH_3 F or G (18th).	4500–NH_3 D or E.	4500–NH_3 D or E–97.	D1426–98, 03 (B).	

	Automated phenate, or.	350.1[60], Rev. 2.0 (1993).	4500–NH_3 G (19th) and 4500–NH_3 H (18th).	4500–NH_3 G ...	4500–NH_3 G–97	....	I–4523–85[2]
	Automated electrode	....	....	....	....	....	See footnote 7
	Ion Chromatography	....	....	....	....	D6919–03.	
5. Antimony—Total,[4] mg/L.	Digestion[4] followed by:						
	AA direct aspiration[36].	....	3111 B	....	3111 B–99.		
	AA furnace	....	3113 B	....	3113 B–99.		
	STGFAA	200.9, Rev. 2.2 (1994).					
	ICP/AES[36]	200.7, Rev. 4.4 (1994).	3120 B	3120 B	3120 B–99.		
	ICP/MS	200.8, Rev. 5.4 (1994).	....	....	....	D5673–03	993.14[3]
6. Arsenic—Total, [4] mg/L	Digestion[4] followed by.	206.5 (Issued 1978)[1].					
	AA gaseous hydride	....	3114 B 4.d	....	3114 B 4.d–97 ...	D2972–97, 03 (B).	I–3062–85[2]
	AA furnace	....	3113 B	....	3113 B–99	D2972–97, 03 (C).	I–4063–98[49]
	STGFAA	200.9, Rev. 2.2 (1994).					
	ICP/AES[36]	200.7, Rev. 4.4 (1994).	3120 B	3120 B	3120 B–99.		
	ICP/MS	200.8, Rev. 5.4 (1994).	....	....	....	D5673–03	993.14[3]
	Colorimetric (SDDC)	....	3500–As C	3500–As B	3500–As B–97 ...	D2972–97, 03 (A).	I–3060–85
7. Barium—Total,[4] mg/L ..	Digestion[4] followed by:						
	AA direct aspiration[36].	....	3111 D	....	3111 D–99	....	I–3084–85[2]
	AA furnace	....	3113 B	....	3113 B–99	D4382–95, 02.	
	ICP/AES[36]	200.7, Rev. 4.4 (1994).	3120 B	3120 B	3120 B–99.		
	ICP/MS	200.8, Rev. 5.4 (1994).	....	....	....	D5673–03	993.14[3]
	DCP[36]	....	....	....	....	....	See footnote[34]
8. Beryllium—Total,[4] mg/L	Digestion[4] followed by:						

TABLE IB—LIST OF APPROVED INORGANIC TEST PROCEDURES—Continued

Parameter	Methodology[58]	Reference (method number or page)					
		EPA[35, 52]	Standard methods (18th, 19th)	Standard methods (20th)	Standard methods online	ASTM	USGS/AOAC/ other
	AA direct aspiration	....	3111 D	....	3111 D–99	D3645–93 (88), 03 (A).	I–3095–85[2]
	AA furnace	....	3113 B	....	3113 B–99	D3645–93 (88), 03 (B).	
	STGFAA	200.9, Rev. 2.2 (1994).					
	ICP/AES	200.7, Rev. 4.4 (1994).	3120 B	3120 B	3120 B–99	....	I–4471–97[50]
	ICP/MS	200.8, Rev. 5.4 (1994).	....	....	....	D5673–03	993.14[3]
	DCP, or	....	....	....	....	D4190–94, 99	See footnote[34]
	Colorimetric (aluminon).	....	3500–Be D.				
9. Biochemical oxygen demand (BOD_5), mg/L.	Dissolved Oxygen Depletion.	....	5210 B	5210 B	5210 B–01	....	973.44,[3] p. 17.[9], I–1578–78[8]
10. Boron—Total,[37] mg/L	Colorimetric (curcumin).	....	4500–B B	4500–B B	4500–B B–00	....	I–3112–85[2]
	ICP/AES, or	200.7, Rev. 4.4 (1994).	3120 B	3120 B	3120 B99	....	I–4471–97[50]
	DCP	....	....	....	....	D4190–94, 99	See footnote 34
11. Bromide, mg/L	Titrimetric	....	....	....	....	D1246–95, 99 (C).	p. S44.[10]
	....	....	....	....	....	....	I–1125–85[2]
	Ion Chromatography	300.0, Rev 2.1 (1993) and 300.1, Rev 1.0 (1997).	4110 B	4110 B	4110 B–00	D4327–97, 03	993.30[3]
	CIE/UV	....	....	....	....	....	D6508, Rev. 2[54]
12. Cadmium—Total,[4] mg/L.	Digestion[4] followed by:						
	AA direct aspiration[36].	....	3111 B or C	....	3111 B or C–99	D3557–95, 02 (A or B).	974.27,[3] p. 37.[9], I–3135–85[2] or I–3136–85[2]

	AA furnace		3113 B		3113 B–99	D3557–95, 02 (D).	I–4138–89[51]
	STGFAA	200.9, Rev. 2.2 (1994).					
	ICP/AES[36]	200.7, Rev. 4.4 (1994).	3120 B	3120 B	3120 B–99		I–1472–85[2] or I–4471–97[50]
	ICP/MS	200.8, Rev. 5.4 (1994).				D5673–03	993.14[3]
	DCP[36]					D4190–94, 99	See footnote[34]
	Voltametry[11], or					D3557–95, 02 (C).	
	Colorimetric (Dithizone).		3500–Cd D.				
13. Calcium—Total,[4] mg/L	Digestion[4] followed by:						
	AA direct aspiration		3111 B		3111 B–99	D511–93, 03(B)	I–3152–85[2]
	ICP/AES	200.7, Rev. 4.4 (1994).	3120 B	3120 B	3120 B–99		I–4471–97[50]
	DCP, or						See footnote[34]
	Titrimetric (EDTA)		3500–Ca D	3500–Ca B	3500–Ca B–97	D511–93, 03(A).	
	Ion Chromatography					D6919–03.	
14. Carbonaceous biochemical oxygen demand ($CBOD_5$), mg/L[12].	Dissolved Oxygen Depletion with nitrification inhibitor.		5210 B	5210 B	5210 B–01.		
15. Chemical oxygen demand (COD), mg/L.	Titrimetric	410.3 (Rev. 1978)[1].	5220 C	5220 C	5220 C–97	D1252–95, 00 (A).	973.46[3], p. 17[9] I–3560–85[2]
	Spectrophotometric, manual or automatic.	410.4, Rev. 2.0 (1993).	5220 D	5220 D	5220 D–97	D1252–95, 00 (B).	See footnotes[13,14]. I–3561–85[2]
16. Chloride, mg/L	Titrimetric: (silver nitrate) or.		4500–Cl–B	4500–Cl–B	4500–Cl–B–97	D512–89(99) (B).	I–1183–85[2]
	(Mercuric nitrate)		4500–Cl–C	4500–Cl–C	4500–Cl–C–97	D512–89 (99) (A).	973.51[3], I–1184–85[2]
	Colorimetric: manual or.						I–1187–85[2]
	Automated (Ferricyanide).		4500–Cl–E	4500–Cl–E	4500–Cl–E–97		I–2187–85[2]
	Potentiometric Titration.		4500–Cl–D	4500–Cl–D	4500–Cl–D–97.		
	Ion Selective Electrode.					D512–89(99)(C).	

TABLE IB—LIST OF APPROVED INORGANIC TEST PROCEDURES—Continued

Parameter	Methodology[58]	Reference (method number or page)					
		EPA[35, 52]	Standard methods (18th, 19th)	Standard methods (20th)	Standard methods online	ASTM	USGS/AOAC/ other
	Ion Chromatography	300.0, Rev 2.1 (1993) and 300.1, Rev 1.0 (1997).	4110 B	4110 B	4110 B–00	D4327–97, 03	993.30[3]
	CIE/UV						D6508, Rev. 2[54]
17. Chlorine—Total residual, mg/L; Titrimetric.	Amperometric direct, or.		4500–Cl D	4500–Cl D	4500–Cl D–00	D1253–86 (96), 03.	
	Amperometric direct (low level).		4500–Cl E	4500–Cl E	4500–Cl E–00.		
	Iodometric direct		4500–Cl B	4500–Cl B	4500–Cl B–00.		
	Back titration ether end-point[15] or.		4500–Cl C	4500–Cl C	4500–Cl C–00.		
	DPD–FAS		4500–Cl F	4500–Cl F	4500–Cl F–00.		
	Spectrophotometric, DPD or.		4500–Cl G	4500–Cl G	4500–Cl G–00.		
	Electrode						See footnote[16]
18. Chromium VI dissolved, mg/L.	0.45–micron Filtration followed by:						
	AA chelation-extraction or.		3111 C		3111 C–99		I–1232–85
	Ion Chromatography	218.6, Rev. 3.3 (1994).	3500–Cr E	3500–Cr C	3500–Cr C–01	D5257–97	993.23
	Colorimetric (Diphenyl-carbazide).		3500–Cr D	3500–Cr B	3500–Cr B–01	D1687–92, 02 (A).	I–1230–85
19. Chromium—Total,[4] mg/L.	Digestion[4] followed by:						
	AA direct aspiration[36].		3111 B		3111 B–99	D1687–92, 02 (B).	974.27[3], I–3236–85[2]
	AA chelation-extraction.		3111 C		3111 C–99.		
	AA furnace		3113 B		3113 B–99	D1687–92, 02 (C).	I–3233–93[46]
	STGFAA	200.9, Rev. 2.2 (1994).					

	ICP/AES[36]	200.7, Rev. 4.4 (1994).	3120 B	3120 B	3120 B–99.		
	ICP/MS	200.8, Rev. 5.4 (1994).				D5673–03	993.14[3]
	DCP,[36] or					D4190–94, 99	See footnote[34]
	Colorimetric (Di-phenyl-carbazide).		3500–Cr D	3500–Cr B	3500–Cr B–01.		
20. Cobalt—Total,[4] mg/L	Digestion[4] followed by:						
	AA direct aspiration		3111 B or C		3111 B or C–99	D3558–94, 03 (A or B).	p. 37[9], I–3239–85[2]
	AA furnace		3113 B		3113 B–99	D3558–94, 03 (C).	I–4243–89[51]
	STGFAA	200.9, Rev. 2.2 (1994).					
	ICP/AES	200.7, Rev. 4.4 (1994).	3120 B	3120 B	3120 B–99		I–4471–97[50]
	ICP/MS	200.8, Rev. 5.4 (1994).				D5673–03	993.14[3]
	DCP					D4190–94, 99	See footnote[34]
21. Color, platinum cobalt units or dominant wavelength, hue, luminance purity.	Colorimetric (ADMI), or.		2120 E	2120 E			See footnote[18]
	(Platinum cobalt), or		2120 B	2120 B	2120 B–01		I–1250–85[2]
	Spectrophotometric		2120 C	2120 C.			
22. Copper—Total,[4] mg/L	Digestion[4] followed by:						
	AA direct aspiration[36].		3111 B or C		3111 B or C–99	D1688–95, 02 (A or B).	974.27[3] p. 37[9] I–3270–85[2] or I–3271–85[2]
	AA furnace		3113 B		3113 B–99	D1688–95, 02 (C).	I–4274–89[51]
	STGFAA	200.9, Rev. 2.2 (1994).					
	ICP/AES[36]	200.7, Rev. 4.4 (1994).	3120 B	3120 B	3120 B–99		I–4471–97[50]
	ICP/MS	200.8, Rev. 5.4 (1994).				D5673–03	993.14[3]
	DCP[36] or					D4190–94, 99	See footnote[34]
	Colorimetric (Neocuproine) or.		3500–Cu D	3500–Cu B	3500–Cu B–99.		
	(Bicinchoninate)		3500–Cu E	3500–Cu C	3500–Cu C–99		See footnote[19]

TABLE IB—LIST OF APPROVED INORGANIC TEST PROCEDURES—Continued

Parameter	Methodology[58]	Reference (method number or page)					
		EPA[35, 52]	Standard methods (18th, 19th)	Standard methods (20th)	Standard methods online	ASTM	USGS/AOAC/ other
23. Cyanide—Total, mg/L	Automated Distillation and Colorimetry, or.						Kelada–01[55]
	Manual distillation with $MgCl_2$ followed by:	335.4, Rev. 1.0 (1993)[57].	4500–CN$^-$C	4500–CN$^-$C		D2036–98(A)	10–204–00–1–X[56]
	Titrimetric or		4500–CN$^-$D	4500–CN$^-$D	4500–CN$^-$D–99		p. 22[9]
	Spectrophotometric, manual or.		4500–CN$^-$E	4500–CN$^-$E	4500–CN$^-$E–99	D2036–98(A)	I–3300–85
	Automated[20] or	335.4, Rev. 1.0 (1993)[57].					10–204–00–1–X[56], I–4302–85[2]
	Ion Selective Electrode.		4500–CN$^-$F	4500–CN$^-$F	4500–CN$^-$F–99	D2036–98(A).	
24. Available Cyanide, mg/L.	Cyanide Amenable to Chlorination (CATC); Manual distillation with $MgCl_2$ followed by Titrimetric or Spectrophotometric.		4500–CN$^-$G	4500–CN$^-$G	4500–CN$^-$G–99	D2036–98(B).	
	Flow injection and ligand exchange, followed by amperometry[61].					D6888–04	OIA–1677[44]
	Automated Distillation and Colorimetry.						Kelada–01[55]
25. Fluoride—Total, mg/L	Manual distillation[6] followed by:		4500–F$^-$B	4500–F$^-$B	4500–F$^-$B–97.		
	Electrode, manual or		4500–F$^-$B	4500–F$^-$B	4500–F$^-$C–97	D1179–93, 99 (B).	
	Automated						I–4327–85[2]
	Colorimetric, (SPADNS) or.		4500–F$^-$D	4500–F$^-$D	4500–F$^-$D–97	D1179–93, 99 (A).	

	Automated complexone.	....	4500–F$^-$E	4500–F$^-$E	4500–F$^-$E–97.		
	Ion Chromatography	300.0, Rev 2.1 (1993) and 300.1, Rev 1.0 (1997).	4110 B	4110 B	4110 B–00	D4327–97,03 ...	993.30 [3]
	CIE/UV	....	....	....	....	....	D6508, Rev. 2 [54]
26. Gold—Total,[4] mg/L	Digestion [4] followed by:						
	AA direct aspiration, or.	....	3111 B	....	3111 B–99.		
	AA furnace, or	231.2 (Rev. 1978) [1].					
	DCP	....	....	....	....	....	See footnote [34]
27. Hardness—Total, as $CaCO_3$, mg/L.	Automated colorimetric,.	130.1 (Issued 1971) [1].					
	Titrimetric (EDTA) or	....	2340 B or C	2340 B or C	2340 B or C–97	D1126–86(92), 02.	973.5 2B [3], I–1338–85[2]
	Ca plus Mg as their carbonates, by inductively coupled plasma or AA direct aspiration. (See Parameters 13 and 33)..						
28. Hydrogen ion (pH), pH units.	Electrometric measurement or.	....	4500–H$^+$ B	4500–H$^+$ B	4500–H$^+$ B–00 ..	D1293–84 (90), 99 (A or B).	973.41.[3], I–1586–85 [2]
	Automated electrode	150.2 (Dec. 1982) [1].	....	....	....	....	See footnote[21], I–2587–85[2]
29. Iridium—Total,[4] mg/L	Digestion [4] followed by:						
	AA direct aspiration or.	....	3111 B	....	3111 B–99.		
	AA furnace	235.2 (Issued 1978) [1].					
30. Iron—Total,[4] mg/L	Digestion [4] followed by:						
	AA direct aspiration [36].	....	3111 B or C	....	3111 B or C–99	D1068–96, 03 (A or B).	974.27 [3], I–3381–85 [2]
	AA furnace	....	3113 B	....	3113 B–99	D1068–96, 03 (C).	
	STGFAA	200.9, Rev. 2.2 (1994).					

TABLE IB—LIST OF APPROVED INORGANIC TEST PROCEDURES—Continued

Parameter	Methodology[58]	Reference (method number or page)					
		EPA[35, 52]	Standard methods (18th, 19th)	Standard methods (20th)	Standard methods online	ASTM	USGS/AOAC/ other
	ICP/AES[36]	200.7, Rev. 4.4 (1994).	3120 B	3120 B	3120 B–99		I–4471–97[50]
	DCP[36] or					D4190–94, 99	See footnote[34]
	Colorimetric (Phenanthroline).		3500–Fe D	3500–Fe B	3500–Fe B–97	D1068–96, 03 (D).	See footnote[22]
31. Kjeldahl Nitrogen[5]—Total, (as N), mg/L.	Digestion and distillation followed by:[20]		4500–N_{org} B or C and 4500–NH_3 B.	4500–N_{org} B or C and 4500–NH_3 B.	4500–N_{org} B or C–97 and 4500–NH_3 B–97.	D3590–89, 02 (A).	
	Titration or		4500–NH_3 C (19th) and 4500–NH_3 E (18th).	4500–NH_3 C	4500–NH_3 C–97	D3590–89, 02 (A).	973.48[3]
	Nesslerization or		4500–NH_3 C (18th Only).			D3590–89, 02 (A).	
	Electrode		4500–NH_3 F or G (18th) and 4500–NH_3 D or E (19th).	4500–NH_3 D or E.	4500–NH_3 D or E–97.		
	Automated phenate colorimetric.	351.1 (Rev. 1978)[1].					I–4551–78[8]
	Semi-automated block digestor colorimetric.	351.2, Rev. 2.0 (1993).				D3590–89, 02 (B).	I–4515–91[45]
	Manual or block digestor potentiometric.					D3590–89, 02 (A).	
	Block digester, followed by Auto distillation and Titration, or.						See footnote[39]
	Nesslerization, or						See footnote[40]
	Flow injection gas diffusion.						See footnote[41]
32. Lead—Total,[4] mg/L	Digestion[4] followed by:						

	AA direct aspiration[36].		3111 B or C		3111 B or C–99	D3559–96, 03 (A or B).	974.27[3], I–3399–85[2]
	AA furnace		3113 B		3113 B–99	D3559–96, 03 (D).	I–4403–89[51]
	STGFAA	200.9, Rev. 2.2 (1994).					
	ICP/AES[36]	200.7, Rev. 4.4 (1994).	3120 B	3120 B	3120 B–99		I–4471–97[50]
	ICP/MS	200.8, Rev. 5.4 (1994).				D5673–03	993.14[3]
	DCP[36]					D4190–94, 99	See footnote[34]
	Voltametry[11] or					D3559–96, 03 (C).	
	Colorimetric (Dithizone).		3500–Pb D	3500–Pb B	3500–Pb B–97.		
33. Magnesium—Total,[4] mg/L.	Digestion[4] followed by:						
	AA direct aspiration		3111 B		3111 B–99	D511–93, 03(B)	974.27[3], I–3447–85[2]
	ICP/AES	200.7, Rev. 4.4 (1994).	3120 B	3120 B	3120 B–99		I–4471–97[50]
	DCP or						See footnote[34]
	Gravimetric		3500–Mg D.				
	Ion Chromatography					D6919–03.	
34. Manganese—Total,[4] mg/L.	Digestion[4] followed by:						
	AA direct aspiration[36].		3111 B		3111 B–99	D858–95, 02 (A or B).	974.27[3], I–3454–85[2]
	AA furnace		3113 B		3113 B–99	D858–95, 02 (C).	
	STGFAA	200.9, Rev. 2.2 (1994).					
	ICP/AES[36]	200.7, Rev. 4.4 (1994).	3120 B	3120 B	3120 B–99		I–4471–97[50]
	ICP/MS	200.8, Rev. 5.4 (1994).				D5673–03	993.14[3]
	DCP36, or					D4190–94, 99	See footnote[34]
	Colorimetric (Persulfate), or.		3500—Mn D	3500–Mn B	3500–Mn B–99		920.203[3]
	(Periodate)						See footnote[23]
35. Mercury—Total[4], mg/L.	Cold vapor, manual or.	245.1, Rev. 3.0 (1994).	3112 B		3112 B–99	D3223–97, 02	977.22[3], I–3462–85[2]
	Automated	245.2 (Issued 1974).					

TABLE IB—LIST OF APPROVED INORGANIC TEST PROCEDURES—Continued

Parameter	Methodology[58]	Reference (method number or page)					
		EPA[35, 52]	Standard methods (18th, 19th)	Standard methods (20th)	Standard methods online	ASTM	USGS/AOAC/ other
	Cold vapor atomic fluorescence spectrometry (CVAFS).	245.7 Rev. 2.0 (2005)[59].					
	Purge and Trap CVAFS.	1631E[43].					
36. Molybdenum—Total[4], mg/L.	Digestion[4] followed by:						
	AA direct aspiration	....	3111 D	....	3111 D–99	....	I–3490–85[2]
	AA furnace	....	3113 B	....	3113 B–99	....	I–3492–96[47]
	ICP/AES	200.7, Rev. 4.4 (1994).	3120 B	3120 B	3120 B–99	....	I–4471–97[50]
....	ICP/MS	200.8, Rev. 5.4 (1994).	....	....	....	D5673–03	993.14[3]
	DCP	....	....	....	....	....	See footnote[34]
37. Nickel—Total,[4] mg/L	Digestion[4] followed by:						
	AA direct aspiration[36].	....	3111 B or C	....	3111 B or C–99	D1886–90, 94 (98) (A or B).	I–3499–85[2]
	AA furnace	....	3113 B	....	3113 B–99	D1886–90, 94 (98) (C).	I–4503–89[51]
	STGFAA	200.9, Rev. 2.2 (1994).					
	ICP/AES[36]	200.7, Rev. 4.4 (1994).	3120 B	3120 B	3120 B–99	....	I–4471–97[50]
	ICP/MS	200.8, Rev. 5.4 (1994).	....	....	....	D5673–03	993.14[3]
	DCP[36], or	....	....	....	....	D4190–94, 99	See footnote[34]
	Colorimetric (heptoxime).	....	3500–Ni D (17th Edition).				
38. Nitrate (as N), mg/L	Ion Chromatography	300.0, Rev 2.1 (1993) and 300.1, Rev 1.0 (1997).	4110 B	4110 B	4110 B–00	D4327–97, 03	993.30[3]
	CIE/UV	....	....	....	....	....	D6508, Rev. 2[54]

	Ion Selective Electrode.		4500–NO_3^-D	4500–NO_3^-D	4500–NO_3^-D–00.		
	Colorimetric (Brucine sulfate), or.	352.1[1]					973.50[3], 419D[1, 7], p. 28[9]
	Nitrate-nitrite N minus Nitrite N (See parameters 39 and 40)..						
39. Nitrate-nitrite (as N), mg/L.	Cadmium reduction, manual or.		4500–NO_3^-E	4500–NO_3^-E	4500–$NO3^-$E–00	D3867–99(B).	
	Automated, or	353.2, Rev. 2.0 (1993).	4500–NO_3^-F	4500–NO_3^-F	4500–NO_3^-F–00	D3867–99(A)	I–4545–85[2]
	Automated hydrazine		4500–NO_3^-H	4500–NO_3^-H	4500–NO_3^-H–00.		
	Ion Chromatography	300.0, Rev 2.1 (1993) and 300.1, Rev 1.0 (1997).	4110 B	4110 B	4110 B–00	D4327–97	993.30[3]
	CIE/UV						D6508, Rev. 2[54]
40. Nitrite (as N), mg/L	Spectrophotometric: Manual or.		4500–NO_2^-B	4500–NO_2^-B	4500–NO_2^-B–00		See footnote[25]
	Automated (Diazotization).						I–4540–85[2]
	Automated (*bypass cadmium reduction).	353.2, Rev. 2.0 (1993).	4500–NO_3^-F	4500–NO_3^-F	4500–NO_3^-F–00	D3867–99(A)	I–4545–85[2]
	Manual (*bypass cadmium reduction).		4500–NO_3^-E	4500–NO_3^-E	4500–NO_3^-E–00	D3867–99(B).	
	Ion Chromatography	300.0, Rev 2.1 (1993) and 300.1, Rev 1.0 (1997).	4110 B	4110 B	4110 B–00	D4327–97, 03	993.30[3]
	CIE/UV						D6508, Rev.2[54]
41. Oil and grease—Total recoverable, mg/L.	Hexane extractable material (HEM): n–Hexane extraction and gravimetry.	1664A[42]		5520 B[38]	5520 B–01[38].		
	Silica gel treated HEM (SGT–HEM): Silica gel treatment and gravimetry..	1664A[42].					

TABLE IB—LIST OF APPROVED INORGANIC TEST PROCEDURES—Continued

Parameter	Methodology[58]	Reference (method number or page)					
		EPA[35, 52]	Standard methods (18th, 19th)	Standard methods (20th)	Standard methods online	ASTM	USGS/AOAC/ other
42. Organic carbon—Total (TOC), mg/L.	Combustion or oxidation.	....	5310 B, C, or D	5310 B, C, or D	5310 B, C, or D–00.	D2579–93 (A or B).	973.47,[3] p. 14[24]
43. Organic nitrogen (as N), mg/L.	Total Kjeldahl N (Parameter 31) minus ammonia N (Parameter 4).						
44. Orthophosphate (as P), mg/L.	Ascorbic acid method:.						
	Automated, or	365.1, Rev. 2.0 (1993).	4500–P F	4500–P F	....	....	973.56[3], I–4601–85[2]
	Manual single reagent.	....	4500–P E	4500–P E	....	D515–88(A)	973.55[3]
	Manual two reagent	365.3 (Issued 1978)[1].					
	Ion Chromatography	300.0, Rev 2.1 (1993) and 300.1, Rev 1.0 (1997).	4110 B	4110 B	4110 B–00	D4327–97, 03	993.30[3]
	CIE/UV	....	....	....	....	....	D6508, Rev. 2[54]
45. Osmium—Total[4], mg/L.	Digestion[4] followed by:						
	AA direct aspiration, or.	....	3111 D	....	3111 D–99.		
	AA furnace	252.2 (Issued 1978)[1].					
46. Oxygen, dissolved, mg/L.	Winkler (Azide modification), or.	....	4500–O C	4500–O C	4500–O C–01	D888–92, 03 (A).	973.4 5B[3], I–1575–78[8]
	Electrode	....	4500–O G	4500–O G	4500–O G–01	D888–92, 03 (B).	I–1576–78[8]
47. Palladium—Total,[4] mg/L.	Digestion[4] followed by:						
	AA direct aspiration, or.	....	3111 B	....	3111 B–99	....	p. S27[10]
	AA furnace	253.2[1] (Issued 1978).	....	....	....	....	p. S28[10]

	DCP						See footnote[34]
48. Phenols, mg/L	Manual distillation[26] Followed by:	420.1[1] (Rev. 1978).					See footnote[27]
	Colorimetric (4AAP) manual, or.	420.1[1] (Rev. 1978).					See footnote[27]
	Automated	420.4 Rev. 1.0 (1993).					
49. Phosphorus (elemental), mg/L.	Gas-liquid chromatography.						See footnote[28]
50. Phosphorus—Total, mg/L.	Persulfate digestion followed by:[20]		4500–P B.5	4500–P B.5			973.55[3]
	Manual or	365.3[1] (Issued 1978).	4500–P E	4500–P E		D515–88(A).	
	Automated ascorbic acid reduction.	365.1 Rev. 2.0 (1993).	4500–P F	4500–P F			973.56[3], I–4600–85[2]
	Semi-automated block digestor.	365.4[1] (Issued 1974).				D515–88(B)	I–4610–91[48]
51. Platinum—Total,[4] mg/L.	Digestion[4] followed by:						
	AA direct aspiration		3111 B		3111 B–99.		
	AA furnace	255.2[1].					
	DCP						See footnote[34]
52. Potassium—Total,[4] mg/L.	Digestion[4] followed by:						
	AA direct aspiration		3111 B		3111 B–99		973.53[3], I–3630–85[2]
	ICP/AES	200.7, Rev. 4.4 (1994).	3120 B	3120 B	3120 B–99.		
	Flame photometric, or.		3500–K D	3500–K B	3500–K B–97.		
	Colorimetric						317 B[17]
	Ion Chromatography					D6919–03.	
53. Residue—Total, mg/L	Gravimetric, 103–105°.		2540 B	2540 B	2540 B–97		I–3750–85[2]
54. Residue—filterable, mg/L.	Gravimetric, 180°		2540 C	2540 C	2540 C–97		I–1750–85[2]
55. Residue—non-filterable (TSS), mg/L.	Gravimetric, 103–105 °C post washing of residue.		2540 D	2540 D	2540 D–97		I–3765–85[2]
56. Residue—settleable, mg/L.	Volumetric, (Imhoff cone), or gravimetric.		2540 F	2540 F	2540 F–97.		
57. Residue—Volatile, mg/L.	Gravimetric, 550 °C	160.4[1]					I–3753–85[2]

TABLE IB—LIST OF APPROVED INORGANIC TEST PROCEDURES—Continued

Parameter	Methodology[58]	Reference (method number or page)					
		EPA[35, 52]	Standard methods (18th, 19th)	Standard methods (20th)	Standard methods online	ASTM	USGS/AOAC/ other
58. Rhodium—Total,[4] mg/L.	Digestion[4] followed by:						
	AA direct aspiration, or.	....	3111 B	....	3111 B–99.		
	AA furnace	265.2[1].					
59. Ruthenium—Total,[4] mg/L.	Digestion[4] followed by:						
	AA direct aspiration, or.	....	3111 B	....	3111 B–99.		
	AA furnace	267.2[1].					
60. Selenium—Total,[4] mg/L.	Digestion[4] followed by:						
	AA furnace	....	3113 B	....	3113 B–99	D3859–98, 03 (B).	I–4668–98[49]
	STGFAA	200.9, Rev. 2.2 (1994).					
	ICP/AES[36]	200.7, Rev. 4.4 (1994).	3120 B	3120 B	3120 B–99.		
	ICP/MS	200.8, Rev. 5.4 (1994).	....	....	....	D5673–03	993.14[3]
	AA gaseous hydride	....	3114 B	....	3114 B–97	D3859–98, 03 (A).	I–3667–85[2]
61. Silica—Dissolved,[37] mg/L.	0.45 micron filtration followed by:						
	Colorimetric, Manual or.	....	4500–Si D	4500–SiO_2 C ...	4500–SiO_2C–97	D859–94, 00 ...	I–1700–85[2]
	Automated (Molybdosilicate), or.	....	....	....	....	....	I–2700–85[2]
	ICP/AES	200.7, Rev. 4.4 (1994).	3120 B	3120 B	3120 B–99	....	I–4471–97[50]
62. Silver—Total,[4, 31] mg/L.	Digestion[4, 29] followed by:						
	AA direct aspiration	....	3111 B or C	....	3111 B or C–99	....	974.27[3], p. 37[9], I–3720–85[2]

	AA furnace		3113 B		3113 B–99		I–4724–89[51]
	STGFAA	200.9, Rev. 2.2 (1994).					
	ICP/AES	200.7, Rev. 4.4 (1994).	3120 B	3120 B	3120 B–99		I–4471–97[50]
	ICP/MS	200.8, Rev. 5.4 (1994).				D5673–03	993.14[3]
	DCP						See footnote[34]
63. Sodium—Total,[4] mg/L	Digestion[4] followed by:						
	AA direct aspiration		3111 B		3111 B–99		973.54[3], I–3735–85[2]
	ICP/AES	200.7, Rev. 4.4 (1994).	3120 B	3120 B	3120 B–99		I–4471–97[50]
	DCP, or						See footnote[34]
	Flame photometric		3500–Na D	3500–Na B	3500–Na B–97.		
	Ion Chromatography					D 6919–03.	
64. Specific conductance, micromhos/cm at 25 °C.	Wheatstone bridge	120.1[1] (Rev. 1982).	2510 B	2510 B	2510 B–97	D1125–95 (99) (A).	973.40[3], I–2781–85[2]
65. Sulfate (as SO_4), mg/L	Automated colorimetric.	375.2, Rev. 2.0 (1993).					
	Gravimetric		4500–$SO_4{}^{2-}$C or D.	4500–$SO_4{}^{2-}$C or D.			925.54[3]
	Turbidimetric					D516–90, 02	426C[30]
	Ion Chromatography	300.0, Rev 2.1 (1993) and 300.1, Rev 1.0 (1997).	4110 B	4110 B	4110 B–00	D4327–97, 03	993.30[3]
	CIE/UV						D6508, Rev. 2[54]
66. Sulfide (as S), mg/L	Titrimetric (iodine), or		4500–S^{2-}F (19th) 4500–S^{2-}E (18th).	4500–S^{2-}F	4500–S^{2-}F–00		I–3840–85[2]
	Colorimetric (methylene blue).		4500–S^{2-}D	4500–S^{2-}D	4500–S^{2-}D–00.		
	Ion Selective Electrode.		4500–S^{2-}G	4500–S^{2-}G	4500–S^{2-}G–00	D4658–03.	
67. Sulfite (as SO_3), mg/L	Titrimetric (iodine-iodate).		4500–$SO_3{}^{2-}$B	4500–$SO_3{}^{2-}$B	4500–$SO_3{}^{2-}$B–00.		
68. Surfactants, mg/L	Colorimetric (methylene blue).		5540 C	5540 C	5540 C–00	D2330–88, 02.	
69. Temperature, °C	Thermometric		2550 B	2550 B	2550 B–00		See footnote[32]
70. Thallium—Total,[4] mg/L.	Digestion[4] followed by:						

TABLE IB—LIST OF APPROVED INORGANIC TEST PROCEDURES—Continued

Parameter	Methodology[58]	Reference (method number or page)					
		EPA[35, 52]	Standard methods (18th, 19th)	Standard methods (20th)	Standard methods online	ASTM	USGS/AOAC/ other
	AA direct aspiration		3111 B		3111 B–99.		
	AA furnace	279.2[1] (Issued 1978).					
	STGFAA	200.9, Rev. 2.2 (1994).					
	ICP/AES	200.7, Rev. 4.4 (1994).	3120 B	3120 B	3120 B–99.		
	ICP/MS	200.8, Rev. 5.4 (1994).				D5673–03	993.14[3]
71. Tin—Total,[4] mg/L	Digestion[4] followed by:						
	AA direct aspiration		3111 B		3111 B–99		I–3850–78[8]
	AA furnace, or		3113 B		3113 B–99.		
	STGFAA	200.9, Rev. 2.2 (1994).					
	ICP/AES	200.7, Rev. 4.4 (1994).					
72. Titanium—Total,[4] mg/L.	Digestion[4] followed by:						
	AA direct aspiration		3111 D		3111 D–99.		
	AA furnace	283.2[1] (Issued 1978).					
	DCP						See footnote[34]
73. Turbidity, NTU[53]	Nephelometric	180.1, Rev. 2.0 (1993).	2130 B	2130 B	2130 B–01	D1889–94, 00	I–3860–85[2]
74. Vanadium—Total,[4] mg/L.	Digestion[4] followed by:						
	AA direct aspiration		3111 D		3111 D–99.		
	AA furnace					D3373–93, 03.	
	ICP/AES	200.7, Rev. 4.4 (1994).	3120 B	3120 B	3120 B–99		I–4471–97[50]
	ICP/MS	200.8, Rev. 5.4 (1994).				D5673–03	993.14[3]
	DCP, or					D4190–94, 99	See footnote[34]
	Colorimetric (Gallic Acid).		3500–V D	3500–V B	3500–V B–97.		

75. Zinc –Total[4], mg/L	Digestion[4] followed by:						
	AA direct aspiration[36].		3111 B or C		3111 B or C–99	D1691–95, 02 (A or B).	974.27[3], p. 37[9], I–3900–85[2]
	AA furnace	289.2[1] (Issued 1978).					
	ICP/AES[36]	200.7, Rev. 4.4 (1994).	3120 B	3120 B	3120 B–99[59]		I–4471–97[50]
	ICP/MS	200.8, Rev. 5.4 (1994).				D5673–03	993.14[3]
	DCP,[36] or					D4190–94, 99	See footnote[34]
	Colorimetric (Dithizone) or.		3500–Zn E.				
	(Zincon)		3500–Zn F	3500–Zn B	3500–Zn B–97		See footnote[33]

Table 1B Notes:

[1] "Methods for Chemical Analysis of Water and Wastes," Environmental Protection Agency, Environmental Monitoring Systems Laboratory–Cincinnati (EMSL–CI), EPA–600/4–79–020 (NTIS PB 84–128677), Revised March 1983 and 1979 where applicable.

[2] Fishman, M. J., *et al.* "Methods for Analysis of Inorganic Substances in Water and Fluvial Sediments," U.S. Department of the Interior, Techniques of Water-Resource Investigations of the U.S. Geological Survey, Denver, CO, Revised 1989, unless otherwise stated.

[3] "Official Methods of Analysis of the Association of Official Analytical Chemists," Methods Manual, Sixteenth Edition, 4th Revision, 1998.

[4] For the determination of total metals (which are equivalent to total recoverable metals) the sample is not filtered before processing. A digestion procedure is required to solubilize analytes in suspended material and to break down organic-metal complexes (to convert the analyte to a detectable form for colorimetric analysis). For non-platform graphite furnace atomic absorption determinations a digestion using nitric acid (as specified in Section 4.1.3 of Methods for the Chemical Analysis of Water and Wastes) is required prior to analysis. The procedure used should subject the sample to gentle, acid refluxing and at no time should the sample be taken to dryness. For direct aspiration flame atomic absorption determinations (FLAA) a combination acid (nitric and hydrochloric acids) digestion is preferred prior to analysis. The approved total recoverable digestion is described as Method 200.2 in Supplement I of "Methods for the Determination of Metals in Environmental Samples" EPA/600R–94/111, May, 1994, and is reproduced in EPA Methods 200.7, 200.8, and 200.9 from the same Supplement. However, when using the gaseous hydride technique or for the determination of certain elements such as antimony, arsenic, selenium, silver, and tin by non–EPA graphite furnace atomic absorption methods, mercury by cold vapor atomic absorption, the noble metals and titanium by FLAA, a specific or modified sample digestion procedure may be required and in all cases the referenced method write-up should be consulted for specific instruction and/or cautions. For analyses using inductively coupled plasma-atomic emission spectrometry (ICP–AES), the direct current plasma (DCP) technique or the EPA spectrochemical techniques (platform furnace AA, ICP–AES, and ICP–MS) use EPA Method 200.2 or an approved alternate procedure (e.g., CEM microwave digestion, which may be used with certain analytes as indicated in Table IB); the total recoverable digestion procedures in EPA Methods 200.7, 200.8, and 200.9 may be used for those respective methods. Regardless of the digestion procedure, the results of the analysis after digestion procedure are reported as "total" metals.

[5] Copper sulfate may be used in place of mercuric sulfate.

[6] Manual distillation is not required if comparability data on representative effluent samples are on file to show that this preliminary distillation step is not necessary: however, manual distillation will be required to resolve any controversies.

[7] Ammonia, Automated Electrode Method, Industrial Method Number 379–75 WE, dated February 19, 1976, Bran & Luebbe (Technicon) Auto Analyzer II, Bran & Luebbe Analyzing Technologies, Inc., Elmsford, NY 10523.

[8] The approved method is that cited in "Methods for Determination of Inorganic Substances in Water and Fluvial Sediments", USGS TWRI, Book 5, Chapter A1 (1979).

[9] American National Standard on Photographic Processing Effluents, April 2, 1975. Available from ANSI, 25 West 43rd st., New York, NY 10036.

[10] "Selected Analytical Methods Approved and Cited by the United States Environmental Protection Agency," Supplement to the Fifteenth Edition of *Standard Methods for the Examination of Water and Wastewater* (1981).

[11] The use of normal and differential pulse voltage ramps to increase sensitivity and resolution is acceptable.

[12] Carbonaceous biochemical oxygen demand ($CBOD_5$) must not be confused with the traditional BOD_5 test method which measures "total BOD." The addition of the nitrification inhibitor is not a procedural option, but must be included to report the $CBOD_5$ parameter. A discharger whose permit requires reporting the traditional BOD_5 may not use a nitrification inhibitor in the procedure for reporting the results. Only when a discharger's permit specifically states $CBOD_5$ is required can the permittee report data using a nitrification inhibitor.

[13] OIC Chemical Oxygen Demand Method, Oceanography International Corporation, 1978, 512 West Loop, P.O. Box 2980, College Station, TX 77840.

[14] Chemical Oxygen Demand, Method 8000, Hach Handbook of Water Analysis, 1979, Hach Chemical Company, P.O. Box 389, Loveland, CO 80537.

[15] The back titration method will be used to resolve controversy.

[16] Orion Research Instruction Manual, Residual Chlorine Electrode Model 97–70, 1977, Orion Research Incorporated, 840 Memorial Drive, Cambridge, MA 02138. The calibration graph for the Orion residual chlorine method must be derived using a reagent blank and three standard solutions, containing 0.2, 1.0, and 5.0 mL 0.00281 N potassium iodate/100 mL solution, respectively.

[17] The approved method is that cited in *Standard Methods for the Examination of Water and Wastewater,* 14th Edition, 1976.

[18] National Council of the Paper Industry for Air and Stream Improvement, Inc., Technical Bulletin 253, December 1971.

[19] Copper, Biocinchoinate Method, Method 8506, Hach Handbook of Water Analysis, 1979, Hach Chemical Company, P.O. Box 389, Loveland, CO 80537.

[20] When using a method with block digestion, this treatment is not required.

[21] Hydrogen ion (pH) Automated Electrode Method, Industrial Method Number 378–75WA, October 1976, Bran & Luebbe (Technicon) Autoanalyzer II. Bran & Luebbe Analyzing Technologies, Inc., Elmsford, NY 10523.

[22] Iron, 1,10-Phenanthroline Method, Method 8008, 1980, Hach Chemical Company, P.O. Box 389, Loveland, CO 80537.

[23] Manganese, Periodate Oxidation Method, Method 8034, Hach Handbook of Wastewater Analysis, 1979, pages 2–113 and 2–117, Hach Chemical Company, Loveland, CO 80537.

[24] Wershaw, R. L.,*et al.*, "Methods for Analysis of Organic Substances in Water," Techniques of Water-Resources Investigation of the U.S. Geological Survey, Book 5, Chapter A3, (1972 Revised 1987) p. 14.

[25] Nitrogen, Nitrite, Method 8507, Hach Chemical Company, P.O. Box 389, Loveland, CO 80537.

[26] Just prior to distillation, adjust the sulfuric-acid-preserved sample to pH 4 with 1 + 9 NaOH.

[27] The approved method is cited in *Standard Methods for the Examination of Water and Wastewater,* 14th Edition. The colorimetric reaction is conducted at a pH of 10.0±0.2. The approved methods are given on pp 576–81 of the 14th Edition: Method 510A for distillation, Method 510B for the manual colorimetric procedure, or Method 510C for the manual spectrometric procedure.

[28] R.F. Addison and R. G. Ackman, "Direct Determination of Elemental Phosphorus by Gas–Liquid Chromatography," *Journal of Chromatography,* Vol. 47, No.3, pp. 421–426, 1970.

[29] Approved methods for the analysis of silver in industrial wastewaters at concentrations of 1 mg/L and above are inadequate where silver exists as an inorganic halide. Silver halides such as the bromide and chloride are relatively insoluble in reagents such as nitric acid but are readily soluble in an aqueous buffer of sodium thiosulfate and sodium hydroxide to pH of 12. Therefore, for levels of silver above 1 mg/L, 20 mL of sample should be diluted to 100 mL by adding 40 mL each of 2 M $Na_2S_2O_3$ and NaOH. Standards should be prepared in the same manner. For levels of silver below 1 mg/L the approved method is satisfactory.

[30] The approved method is that cited in *Standard Methods for the Examination of Water and Wastewater,* 15th Edition.

[31] For samples known or suspected to contain high levels of silver (e.g., in excess of 4 mg/L), cyanogen iodide should be used to keep the silver in solution for analysis. Prepare a cyanogen iodide solution by adding 4.0 mL of concentrated NH_4OH, 6.5 g of KCN, and 5.0 mL of a 1.0 N solution of I_2 to 50 mL of reagent water in a volumetric flask and dilute to 100.0 mL. After digestion of the sample, adjust the pH of the digestate to >7 to prevent the formation of HCN under acidic conditions. Add 1 mL of the cyanogen iodide solution to the sample digestate and adjust the volume to 100 mL with reagent water (NOT acid). If cyanogen iodide is added to sample digestates, then silver standards must be prepared that contain cyanogen iodide as well. Prepare working standards by diluting a small volume of a silver stock solution with water and adjusting the pH>7 with NH_4OH. Add 1 mL of the cyanogen iodide solution and let stand 1 hour. Transfer to a 100-mL volumetric flask and dilute to volume with water.

[32] Stevens, H.H., Ficke, J. F., and Smoot, G. F., "Water Temperature—Influential Factors, Field Measurement and Data Presentation," Techniques of Water-Resources Investigations of the U.S. Geological Survey, Book 1, Chapter D1, 1975.

[33] Zinc, Zincon Method, Method 8009, Hach Handbook of Water Analysis, 1979, pages 2–231 and 2–333, Hach Chemical Company, Loveland, CO 80537.

[34] "Direct Current Plasma (DCP) Optical Emission Spectrometric Method for Trace Elemental Analysis of Water and Wastes, Method AES0029," 1986—Revised 1991, Thermo Jarrell Ash Corporation, 27 Forge Parkway, Franklin, MA 02038

[35] Precision and recovery statements for the atomic absorption direct aspiration and graphite furnace methods, and for the spectrophotometric SDDC method for arsenic are provided in Appendix D of this part titled, "Precision and Recovery Statements for Methods for Measuring Metals."

[36] Microwave-assisted digestion may be employed for this metal, when analyzed by this methodology. "Closed Vessel Microwave Digestion of Wastewater Samples for Determination of Metals", CEM Corporation, P.O. Box 200, Matthews, NC 28106–0200, April 16, 1992. Available from the CEM Corporation.

[37] When determining boron and silica, only plastic, PTFE, or quartz laboratory ware may be used from start until completion of analysis.

[38] Only use n-hexane extraction solvent when determining Oil and Grease parameters—Hexane Extractable Material (HEM), or Silica Gel Treated HEM (analogous to EPA Method 1664A). Use of other extraction solvents (e.g., those in the 18th and 19th editions) is prohibited.

[39] Nitrogen, Total Kjeldahl, Method PAI-DK01 (Block Digestion, Steam Distillation, Titrimetric Detection), revised 12/22/94, OI Analytical/ALPKEM, P.O. Box 9010, College Station, TX 77842.

[40] Nitrogen, Total Kjeldahl, Method PAI–DK02 (Block Digestion, Steam Distillation, Colorimetric Detection), revised 12/22/94, OI Analytical/ALPKEM, P.O. Box 9010, College Station, TX 77842.

[41] Nitrogen, Total Kjeldahl, Method PAI–DK03 (Block Digestion, Automated FIA Gas Diffusion), revised 12/22/94, OI Analytical/ALPKEM, P.O. Box 9010, College Station, TX 77842.

[42] Method 1664, Revision A ''*n*-Hexane Extractable Material (HEM; Oil and Grease) and Silica Gel Treated *n*-Hexane Extractable Material (SGT-HEM; Non-polar Material) by Extraction and Gravimetry'' EPA–821–R–98–002, February 1999. Available at NTIS, PB–121949, U.S. Department of Commerce, 5285 Port Royal, Springfield, VA 22161.

[43] USEPA. 2001. Method 1631, Revision E, ''Mercury in Water by Oxidation, Purge and Trap, and Cold Vapor Atomic Fluorescence Spectrometry'' September 2002, Office of Water, U.S. Environmental Protection Agency (EPA–821–R–02–024). The application of clean techniques described in EPA's draft Method 1669: *Sampling Ambient Water for Trace Metals at EPA Water Quality Criteria Levels* (EPA–821–R–96–011) are recommended to preclude contamination at low-level, trace metal determinations.

[44] Available Cyanide, Method OIA–1677, ''Available Cyanide by Flow Injection, Ligand Exchange, and Amperometry,'' ALPKEM, A Division of OI Analytical, P.O. Box 9010, College Station, TX 77842–9010.

[45] ''Methods of Analysis by the U.S. Geological Survey National Water Quality Laboratory—Determination of Ammonia Plus Organic Nitrogen by a Kjeldahl Digestion Method,'' Open File Report (OFR) 00–170.

[46] ''Methods of Analysis by the U.S. Geological Survey National Water Quality Laboratory—Determination of Chromium in Water by Graphite Furnace Atomic Absorption Spectrophotometry,'' Open File Report (OFR) 93–449.

[47] ''Methods of Analysis by the U.S. Geological Survey National Water Quality Laboratory—Determination of Molybdenum by Graphite Furnace Atomic Absorption Spectrophotometry,'' Open File Report (OFR) 97–198.

[48] ''Methods of Analysis by the U.S. Geological Survey National Water Quality Laboratory—Determination of Total Phosphorus by Kjeldahl Digestion Method and an Automated Colorimetric Finish That Includes Dialysis'' Open File Report (OFR) 92–146.

[49] ''Methods of Analysis by the U.S. Geological Survey National Water Quality Laboratory—Determination of Arsenic and Selenium in Water and Sediment by Graphite Furnace-Atomic Absorption Spectrometry'' Open File Report (OFR) 98–639.

[50] ''Methods of Analysis by the U.S. Geological Survey National Water Quality Laboratory—Determination of Elements in Whole-water Digests Using Inductively Coupled Plasma-Optical Emission Spectrometry and Inductively Coupled Plasma-Mass Spectrometry,'' Open File Report (OFR) 98-165.

[51] ''Methods of Analysis by the U.S. Geological Survey National Water Quality Laboratory—Determination of Inorganic and Organic Constituents in Water and Fluvial Sediment,'' Open File Report (OFR) 93–125.

[52] All EPA methods, excluding EPA Method 300.1, are published in ''Methods for the Determination of Metals in Environmental Samples,'' Supplement I, National Exposure Risk Laboratory-Cincinnati (NERL–CI), EPA/600/R–94/111, May 1994; and ''Methods for the Determination of Inorganic Substances in Environmental Samples,'' NERL–CI, EPA/600/R–93/100, August, 1993. EPA Method 300.1 is available from *http://www.epa.gov/safewater/methods/pdfs/met300.pdf.*

[53] Styrene divinyl benzene beads (e.g., AMCO–AEPA–1 or equivalent) and stabilized formazin (e.g., Hach StablCal™ or equivalent) are acceptable substitutes for formazin.

[54] Method D6508, Rev. 2, ''Test Method for Determination of Dissolved Inorganic Anions in Aqueous Matrices Using Capillary Ion Electrophoresis and Chromate Electrolyte,'' available from Waters Corp, 34 Maple St., Milford, MA, 01757, Telephone: 508/482–2131, Fax: 508/482–3625.

[55] Kelada-01, ''Kelada Automated Test Methods for Total Cyanide, Acid Dissociable Cyanide, and Thiocyanate,'' EPA 821–B–01–009, Revision 1.2, August 2001, National Technical Information Service (NTIS), 5285 Port Royal Road, Springfield, VA 22161 [Order Number PB 2001–108275]. The toll free telephone number is: 800–553–6847. Note: A 450–W UV lamp may be used in this method instead of the 550–W lamp specified if it provides performance within the quality control (QC) acceptance criteria of the method in a given instrument. Similarly, modified flow cell configurations and flow conditions may be used in the method, provided that the QC acceptance criteria are met.

[56] QuikChem Method 10–204–00–1–X, ''Digestion and Distillation of Total Cyanide in Drinking and Wastewaters using MICRO DIST and Determination of Cyanide by Flow Injection Analysis'' is available from Lachat Instruments 6645 W. Mill Road, Milwaukee, WI 53218, Telephone: 414–358–4200.

[57] When using sulfide removal test procedures described in Method 335.4, reconstitute particulate that is filtered with the sample prior to distillation.

[58] Unless otherwise stated, if the language of this table specifies a sample digestion and/or distillation ''followed by'' analysis with a method, approved digestion and/or distillation are required prior to analysis.

[59] Method 245.7, Rev. 2.0, ''Mercury in Water by Cold Vapor Atomic Fluorescence Spectrometry,'' February 2005, EPA–821–R–05–001, available from the U.S. EPA Sample Control Center (operated by CSC), 6101 Stevenson Avenue, Alexandria, VA 22304, Telephone: 703–461–2100, Fax: 703–461–8056.

[60] The use of EDTA may decrease method sensitivity in some samples. Analysts may omit EDTA provided that all method specified quality control acceptance criteria are met.

[61] Samples analyzed for available cyanide using Methods OIA–1677 or D6888–04 that contain particulate matter may be filtered only after the ligand exchange reagents have been added to the samples, because the ligand exchange process converts complexes containing available cyanide to free cyanide, which is not removed by filtration. Analysts are further cautioned to limit the time between the addition of the ligand exchange reagents and sample analysis to no more than 30 minutes to preclude settling of materials in samples.

TABLE IC—LIST OF APPROVED TEST PROCEDURES FOR NON-PESTICIDE ORGANIC COMPOUNDS

Parameter[1]	EPA method number[2,7]			Other approved methods			
	GC	GC/MS	HPLC	Standard Methods [Edition(s)]	Standard Methods Online	ASTM	Other
1. Acenaphthene	610	625, 1625B	610	6440 B [18th, 19th, 20th].	....	D4657–92 (99)	See footnote[9], p. 27
2. Acenaphthylene	610	625, 1625B	610	6410 B, 6440 B, [18th, 19th, 20th].	6410 B–00	D4657–92 (99)	See footnote[9], p. 27
3. Acrolein	603	624[4], 1624B.					
4. Acrylonitrile	603	624[4], 1624B.					
5. Anthracene	610	625, 1625B	610	6410 B, 6440 B [18th, 19th, 20th].	6410 B–00	D4657–92 (99)	See footnote[9], p. 27
6. Benzene	602	624, 1624B	....	6200 B [20th] and 6210 B [18th,19th], 6200 C [20th] and 6220 B [18th,19th].	6200 B and C–97.		
7. Benzidine	....	625[5], 1625B	605	....	....	....	See footnote[3], p.1
8. Benzo(a)anthracene	610	625, 1625B	610	6410 B, 6440 B [18th, 19th, 20th].	6410 B–00	D4657–92 (99)	See footnote[9], p. 27
9. Benzo(a)pyrene	610	625, 1625B	610	6410 B, 6440 B [18th, 19th, 20th].	6410 B–00	D4657–92 (99)	See footnote[9], p. 27
10. Benzo(b)fluoranthene	610	625, 1625B	610	6410 B, 6440 B [18th, 19th, 20th].	6410 B–00	D4657–92 (99)	See footnote[9], p. 27
11. Benzo(g,h,i) perylene	610	625, 1625B	610	6410 B, 6440 B [18th, 19th, 20th].	6410 B–00	D4657–92 (99)	See footnote[9], p. 27
12. Benzo(k) fluoranthene	610	625, 1625B	610	6410 B, 6440 B [18th, 19th, 20th].	6410 B–00	D4657–92 (99)	See footnote[9], p. 27
13. Benzyl chloride	....	....	....	....	....	....	See footnote[3], p. 130: See footnote[6], p. S102
14. Benzyl butyl phthalate	606	625, 1625B	....	6410 B [18th, 19th, 20th].	6410 B–00	....	See footnote[9], p. 27

15. Bis(2-chloroethoxy) methane.	611	625, 1625B		6410 B [18th, 19th, 20th].	6410 B–00		See footnote [9], p. 27
16. Bis(2-chloroethyl) ether.	611	625, 1625B		6410 B [18th, 19th, 20th].	6410 B–00		See footnote [9], p. 27
17. Bis(2-ethylhexyl) phthalate.	606	625, 1625B		6410 B [18th, 19th, 20th].	6410 B–00		See footnote [9], p. 27
18. Bromodichloro-methane.	601	624, 1624B		6200 C [20th] and 6230 B [18th, 19th], 6200 B [20th] and 6210 B [18th, 19th].	6200 B and C–97.		
19. Bromoform	601	624, 1624B		6200 C [20th] and 6230 B [18th, 19th], 6200 B [20th] and 6210 B [18th, 19th].	6200 B and C–97.		
20. Bromomethane	601	624, 1624B		6200 C [20th] and 6230 B [18th, 19th], 6200 B [20th] and 6210 B [18th, 19th].	6200 B and C–97.		
21. 4-Bromophenyl phenyl ether.	611	625, 1625B		6410 B [18th, 19th, 20th].	6410 B–00		See footnote [9], p. 27
22. Carbon tetrachloride	601	624, 1624B		6200 C [20th] and 6230 B [18th, 19th].	6200 C–97		See footnote [3], p. 130
23. 4-Chloro-3-methyl phenol.	604	625, 1625B		6410 B, 6420 B [18th, 19th, 20th].	6410 B–00, 6420 B–00.		See footnote [9], p. 27
24. Chlorobenzene	601, 602	624, 1624B		6200 B [20th] and 6210 B [18th, 19th], 6200 C [20th] and 6220 B [18th, 19th], 6200 C [20th] and 6230 B [18th, 19th].	6200 B and C–97		See footnote [3], p. 130
25. Chloroethane	601	624, 1624B		6200 B [20th] and 6210 B [18th, 19th], 6200 C [20th] and 6230 B [18th, 19th].	6200 B and C–97.		

TABLE IC—LIST OF APPROVED TEST PROCEDURES FOR NON-PESTICIDE ORGANIC COMPOUNDS—Continued

Parameter[1]	EPA method number[2,7]			Other approved methods			
	GC	GC/MS	HPLC	Standard Methods [Edition(s)]	Standard Methods Online	ASTM	Other
26. 2-Chloroethylvinyl ether.	601	624, 1624B	......	6200 B [20th] and 6210 B [18th, 19th], 6200 C [20th] and 6230 B [18th, 19th].	6200 B and C–97.		
27. Chloroform	601	624, 1624B	......	6200 B [20th] and 6210 B [18th, 19th], 6200 C [20th] and 6230 B [18th, 19th].	6200 B and C–97	......	See footnote[3], p. 130
28. Chloromethane	601	624, 1624B	......	6200 B [20th] and 6210 B [18th, 19th] 6200 C [20th] and 6230 B [18th, 19th].	6200 B and C–97.		
29. 2-Chloronaph-thalene	612	625, 1625B	......	6410 B [18th, 19th, 20th].	6410 B–00	......	See footnote[9], p. 27
30. 2-Chlorophenol	604	625, 1625B	......	6410 B, 6420 B [18th, 19th, 20th].	6410 B(00, 6420 B–00.	......	See footnote[9], p. 27
31. 4-Chlorophenyl phenyl ether.	611	625, 1625B	......	6410 B [18th, 19th, 20th].	6410 B–00	......	See footnote[9], p. 27
32. Chrysene	610	625, 1625B	610	6410 B, 6440 B [18th, 19th, 20th].	6410 B–00	D4657–92 (99)	See footnote[9], p. 27
33. Dibenzo(a,h)an-thracene.	610	625, 1625B	610	6410 B, 6440 B [18th, 19th, 20th].	6410 B–00	D4657–92 (99)	See footnote[9], p. 27
34. Dibromochloro-meth-ane.	601	624, 1624B	......	6200 B [20th] and 6210 B [18th, 19th] 6200 C [20th] and 6230 B [18th, 19th].	6200 B and C–97.		
35. 1,2-Dichloro-benzene	601, 602	624, 1625B	......	6200 C [20th] and 6220 B [18th, 19th], 6200 C [20th] and 6230 B [18th, 19th].	6200 C–97	......	See footnote[9], p. 27

36. 1,3-Dichloro-benzene	601, 602	624, 1625B	....	6200 C [20th] and 6220 B [18th, 19th], 6200 C [20th] and 6230 B [18th, 19th].	6200 C–97	....	See footnote [9], p. 27
37. 1,4-Dichloro-benzene	601, 602	624, 1625B	....	6200 C [20th] and 6220 B [18th, 19th], 6200 C [20th] and 6230 B [18th, 19th].	6200 C–97	....	See footnote [9], p. 27
38. 3,3-Dichloro-benzidine.	....	625, 1625B	605	6410 B [18th, 19th, 20th].	6410 B–00.		
39. Dichlorodifluoro-methane.	601	....	....	6200 C [20th] and 6230 B [18th, 19th].	6200 C–97.		
40. 1,1-Dichloroethane	601	624, 1624B	....	6200 B [20th] and 6210 B [18th, 19th], 6200 C [20th] and 6230 B [18th, 19th].	6200 B and C–97.		
41. 1,2-Dichloroethane	601	624, 1624B	....	6200 B [20th] and 6210 B [18th, 19th], 6200 C [20th] and 6230 B [18th, 19th].	6200 B and C–97.		
42. 1,1-Dichloroethene	601	624, 1624B	....	6200 B [20th] and 6210 B [18th, 19th], 6200 C [20th] and 6230 B [18th, 19th].	6200 B and C–97.		
43. trans-1,2-Dichloroethene.	601	624, 1624B	....	6200 B [20th] and 6210 B [18th, 19th], 6200 C [20th] and 6230 B [18th, 19th].	6200 B and C–97.		
44. 2,4-Dichlorophenol	604	625, 1625B	....	6410 B, 6420 B [18th, 19th, 20th].	6410 B–00, 6420 B–00.	....	See footnote [9], p. 27
45. 1,2-Dichloro-propane	601	624, 1624B	....	6200 B [20th] and 6210 B [18th, 19th], 6200 C [20th] and 6230 B [18th, 19th].	6200 B and C–97.		

TABLE IC—LIST OF APPROVED TEST PROCEDURES FOR NON-PESTICIDE ORGANIC COMPOUNDS—Continued

Parameter [1]	EPA method number [2,7]			Other approved methods			
	GC	GC/MS	HPLC	Standard Methods [Edition(s)]	Standard Methods Online	ASTM	Other
46. cis-1,3-Dichloro-propene.	601	624, 1624B	....	6200 B [20th] and 6210 B [18th, 19th], 6200 C [20th] and 6230 B [18th, 19th].	6200 B and C–97.		
47. trans-1,3-Dichloro-propene.	601	624, 1624B	....	6200 B [20th] and 6210 B [18th, 19th], 6200 C [20th] and 6230 B [18th, 19th].	6200 B and C–97.		
48. Diethyl phthalate	606	625, 1625B	....	6410 B [18th, 19th, 20th].	6410 B–00	....	See footnote [9], p. 27
49. 2,4-Dimethylphenol	604	625, 1625B	....	6410 B, 6420 B [18th, 19th, 20th].	6410 B–00, 6420 B–00.	....	See footnote [9], p. 27
50. Dimethyl phthalate	606	625, 1625B	....	6410 B [18th, 19th, 20th].	6410 B–00	....	See footnote [9], p. 27
51. Di-n-butyl phthalate	606	625, 1625B	....	6410 B [18th, 19th, 20th].	6410 B–00	....	See footnote [9], p. 27
52. Di-n-octyl phthalate	606	625, 1625B	....	6410 B [18th, 19th, 20th].	6410 B–00	....	See footnote [9], p. 27
53. 2,3-Dinitrophenol	604	625, 1625B	....	6410 B, 6420 B [18th, 19th, 20th].	6410 B–00, 6420 B–00.	....	
54. 2,4-Dinitrotoluene	609	625, 1625B	....	6410 B [18th, 19th, 20th].	6410 B–00	....	See footnote [9], p. 27
55. 2,6-Dinitrotoluene	609	625, 1625B	....	6410 B [18th, 19th, 20th].	6410 B–00	....	See footnote [9], p. 27
56. Epichlorohydrin	....	....	....	....	....	....	See footnote [3], p. 130; See footnote [6], p. S102
57. Ethylbenzene	602	624, 1624B	....	6200 B [20th] and 6210 B [18th, 19th], 6200 C [20th] and 6220 B [18th, 19th].	6200 B and C–97	....	
58. Fluoranthene	610	625, 1625B	610	6410 B, 6440 B [18th, 19th, 20th].	6410 B–00	D4657–92 (99)	See footnote [9], p. 27

59. Fluorene	610	625, 1625B	610	6410 B, 6440 B [18th, 19th, 20th].	6410 B–00	D4657–92 (99)	See footnote [9], p. 27
60. 1,2,3,4,6,7,8-Heptachloro-dibenzofuran.		1613B [10].					
61. 1,2,3,4,7,8,9-Heptachloro-dibenzofuran.		1613B [10].					
62. 1,2,3,4,6,7,8-Heptachlorodibenzo-p-dioxin.		1613B [10].					
63. Hexachlorobenzene	612	625, 1625B		6410 B [18th, 19th, 20th].	6410 B–00		See footnote [9], p. 27
64. Hexachloro-butadiene	612	625, 1625B		6410 B [18th, 19th, 20th].	6410 B–00		See footnote [9], p. 27
65. Hexachlorocyclo-pentadiene.	612	625 [5], 1625B		6410 B [18th, 19th, 20th].	6410 B–00		See footnote [9], p. 27
66. 1,2,3,4,7,8-Hexachlorodibenzofuran.		1613B [10].					
67. 1,2,3,6,7,8-Hexachlorodibenzofuran.		1613B [10].					
68. 1,2,3,7,8,9-Hexachlorodibenzofuran.		1613B [10].					
69. 2,3,4,6,7,8-Hexachlorodibenzofuran.		1613B [10].					
70. 1,2,3,4,7,8-Hexachlorodibenzo-p-dioxin.		1613B [10].					
71. 1,2,3,6,7,8-Hexachlorodibenzo-p-dioxin.		1613B [10].					
72. 1,2,3,7,8,9-Hexachlorodibenzo-p-dioxin 1613B [10].		1613B [10].					
73. Hexachloroethane	612	625, 1625B		6410 B [18th, 19th, 20th].	6410 B–00		See footnote [9], p. 27
74. Ideno(1,2,3-cd) pyrene.	610	625, 1625B	610	6410 B, 6440 B [18th, 19th, 20th].	6410 B–00	D4657–92 (99)	See footnote [9], p. 27
75. Isophorone	609	625, 1625B		6410 B [18th, 19th, 20th].	6410 B–00		See footnote [9], p. 27

TABLE IC—LIST OF APPROVED TEST PROCEDURES FOR NON-PESTICIDE ORGANIC COMPOUNDS—Continued

Parameter [1]	EPA method number [2,7]			Other approved methods			
	GC	GC/MS	HPLC	Standard Methods [Edition(s)]	Standard Methods Online	ASTM	Other
76. Methylene chloride	601	624, 1624B	....	6200 C [20th] and 6230 B [18th, 19th].	6200 C–97	....	See footnote [3], p. 130
77. 2-Methyl-4,6-dinitrophenol.	604	625, 1625B	....	6410 B, 6420 B [18th, 19th, 20th].	6410 B–00, 6420 B–00.	....	See footnote [9], p. 27
78. Naphthalene	610	625, 1625B	610	6410 B, 6440 B [18th, 19th, 20th].	6410 B–00	....	See footnote [9], p. 27
79. Nitrobenzene	609	625, 1625B	....	6410 B [18th, 19th, 20th].	6410 B–00	D4657–92 (99)	See footnote [9], p. 27
80. 2-Nitrophenol	604	625, 1625B	....	6410 B, 6420 B [18th, 19th, 20th].	6410 B–00, 6420 B–00.	....	See footnote [9], p. 27
81. 4-Nitrophenol	604	625, 1625B	....	6410 B, 6420 B [18th, 19th, 20th].	6410 B–00, 6420 B–00.	....	See footnote [9], p. 27
82. N-Nitrosodimethylamine.	607	6255, 1625B ...	....	6410 B [18th, 19th, 20th].	6410 B–00	....	See footnote [9], p. 27
83. N-Nitrosodi-n-propylamine.	607	6255, 1625B ...	....	6410 B [18th, 19th, 20th].	6410 B–00	....	See footnote [9], p. 27
84. N-Nitrosodiphenylamine.	607	6255, 1625B ...	....	6410 B [18th, 19th, 20th].	6410 B–00	....	See footnote [9], p. 27
85. Octachlorodibenzofuran.	....	1613B [10]*.					
86. Octachlorodibenzo-p-dioxin.	....	1613B [10].					
87. 2,2'-Oxybis(2-chloropropane) [also known as bis(2-chloroisopropyl) ether].	611	625, 1625B	....	6410 B [18th, 19th, 20th].	6410 B–00.		
88. PCB–1016	608	625	....	6410 B [18th, 19th, 20th].	6410 B–00	....	See footnote [3], p. 43; See footnote [8]
89. PCB–1221	608	625	....	6410 B [18th, 19th, 20th].	6410 B–00	....	See footnote [3], p. 43; See footnote [8]
90. PCB–1232	608	625	....	6410 B [18th, 19th, 20th].	6410 B–00	....	See footnote [3], p. 43; See footnote [8]

91. PCB–1242	608	625	....	6410 B [18th, 19th, 20th].	6410 B–00	....	See footnote [3], p. 43; See footnote [8]
92. PCB–1248	608	625.					
93. PCB–1254	608	625	....	6410 B [18th, 19th, 20th].	6410 B–00	....	See footnote [3], p. 43; See footnote [8]
94. PCB–1260	608	625	....	6410 B, 6630 B [18th, 19th, 20th].	6410 B–00	....	See footnote 3, p. 43; See footnote 8
95. 1,2,3,7,8-Pentachloro-dibenzofuran .	....	1613B[10].					
96. 2,3,4,7,8-Pentachloro-dibenzofuran .	....	1613B[10].					
97. 1,2,3,7,8,-Pentachlorodibenzo-*p*-dioxin.	....	1613B[10].					
98. Pentachlorophenol	604	625, 1625B	....	6410 B, 6630 B [18th, 19th, 20th].	6410 B–00	....	See footnote [3], p. 140; See footnote [9], p. 27
99. Phenanthrene	610	625, 1625B	610	6410 B, 6440 B [18th, 19th, 20th].	6410 B–00	D4657–92 (99)	See footnote [9], p. 27
100. Phenol	604	625, 1625B	....	6410 B, 6420 B [18th, 19th, 20th].	6410 B–00, 6420 B–00.	....	See footnote [9], p. 27
101. Pyrene	610	625, 1625B	610	6410 B, 6440 B [18th, 19th, 20th].	6410 B–00	D4657–92 (99)	See footnote [9], p. 27
102. 2,3,7,8-Tetra-chlorodibenzofuran.	....	1613B10.					
103. 2,3,7,8-Tetra-chlorodibenzo-p-dioxin.	....	613, 625[5a], 1613B[10].					
104. 1,1,2,2-Tetra-chloro ethane .	601	624, 1624B	....	6200 B [20th] and 6210 B [18th, 19th], 6200 C [20th] and 6230 B [18th, 19th].	6200 B and C–97	....	See footnote [3], p. 130
105. Tetrachloroethene	601	624, 1624B	....	6200 B [20th] and 6210 B [18th, 19th], 6200 C [20th] and 6230 B [18th, 19th].	6200 B and C–97	....	See footnote [3], p. 130

TABLE IC—LIST OF APPROVED TEST PROCEDURES FOR NON-PESTICIDE ORGANIC COMPOUNDS—Continued

Parameter[1]	EPA method number[2,7]			Other approved methods			
	GC	GC/MS	HPLC	Standard Methods [Edition(s)]	Standard Methods Online	ASTM	Other
106. Toluene	602	624, 1624B		6200 B [20th] and 6210 B [18th, 19th], 6200 C [20th] and 6220 B [18th, 19th].	6200 B and C–97.		
107. 1,2,4-Trichloro-benzene.	612	625, 1625B		6410 B [18th, 19th, 20th].	6410 B–00		See footnote [3], p. 130; See footnote [9], p. 27
108. 1,1,1-Trichloro-ethane.	601	624, 1624B		6200 B [20th] and 6210 B [18th, 19th], 6200 C [20th] and 6230 B [18th, 19th].	6200 B and C–97.		
109. 1,1,2-Trichloro-ethane.	601	624, 1624B	6200 B [20th] and 6210 B [18th, 19th], 6200 C [20th] and 6230 B [18th, 19th]	6200 B and C–97		See footnote [3], p. 130.	
110. Trichloroethene	601	624, 1624B		6200 B [20th] and 6210 B [18th, 19th], 6200 C [20th] and 6230 B [18th, 19th].	6200 B and C–97.		
111. Trichlorofluoro-methane.	601	624		6200 B [20th] and 6210 B [18th, 19th], 6200 C [20th] and 6230 B [18th, 19th].	6200 B and C–97.		
112. 2,4,6-Trichlorophenol.	604	625, 1625B		6410 B, 6420 B [18th, 19th, 20th].	6410 B–00, 6420 B–00.		See footnote [9], p. 27

113. Vinyl chloride	601	624, 1624B		6200 B [20th] and 6210 B [18th, 19th], ≤6200 C [20th] and 6230 B [18th, 19th].	6200 B and C–97.		

---

[1] All parameters are expressed in micrograms per liter (µg/L) except for Method 1613B in which the parameters are expressed in picograms per liter (pg/L).

[2] The full text of Methods 601–613, 624, 625, 1624B, and 1625B, are given at Appendix A, "Test Procedures for Analysis of Organic Pollutants," of this part 136. The full text of Method 1613B is incorporated by reference into this part 136 and is available from the National Technical Information Services as stock number PB95–104774. The standardized test procedure to be used to determine the method detection limit (MDL) for these test procedures is given at Appendix B, "Definition and Procedure for the Determination of the Method Detection Limit," of this part 136.

[3] "Methods for Benzidine: Chlorinated Organic Compounds, Pentachlorophenol and Pesticides in Water and Wastewater," U.S. Environmental Protection Agency, September, 1978.

[4] Method 624 may be extended to screen samples for Acrolein and Acrylonitrile. However, when they are known to be present, the preferred method for these two compounds is Method 603 or Method 1624B.

[5] Method 625 may be extended to include benzidine, hexachlorocyclopentadiene, N-nitrosodimethylamine, and N-nitrosodiphenylamine. However, when they are known to be present, Methods 605, 607, and 612, or Method 1625B, are preferred methods for these compounds.

[5a] 625, screening only.

[6] "Selected Analytical Methods Approved and Cited by the United States Environmental Protection Agency," Supplement to the *Fifteenth Edition of Standard Methods for the Examination of Water and Wastewater* (1981).

[7] Each analyst must make an initial, one-time demonstration of their ability to generate acceptable precision and accuracy with Methods 601–603, 624, 625, 1624B, and 1625B (See appendix A of this part 136) in accordance with procedures each in Section 8.2 of each of these methods. Additionally, each laboratory, on an on-going basis must spike and analyze 10% (5% for methods 624 and 625 and 100% for methods 1624B and 1625B) of all samples to monitor and evaluate laboratory data quality in accordance with Sections 8.3 and 8.4 of these methods. When the recovery of any parameter falls outside the warning limits, the analytical results for that parameter in the unspiked sample are suspect. The results should be reported, but cannot be used to demonstrate regulatory compliance. These quality control requirements also apply to the Standard Methods, ASTM Methods, and other methods cited.

[8] "Organochlorine Pesticides and PCBs in Wastewater Using Empore™ Disk" 3M Corporation Revised 10/28/94.

[9] USGS Method 0–3116–87 from "Methods of Analysis by U.S. Geological Survey National Water Quality Laboratory—Determination of Inorganic and Organic Constituents in Water and Fluvial Sediments," U.S. Geological Survey, Open File Report 93–125.

[10] Analysts may use Fluid Management Systems, Inc. PowerPrep system in place of manual cleanup provided that the analysis meet the requirements of Method 1613B (as specified in Section 9 of the method) and permitting authorities.

TABLE ID—LIST OF APPROVED TEST PROCEDURES FOR PESTICIDES[1]

Parameter	Method	EPA[2, 7]	Standard Methods 18th, 19th, 20th Ed.	Standard Methods Online	ASTM	Other
1. Aldrin	GC	608	6630 B & C		D3086–90, D5812-96 (2002)	See footnote[3], p. 7; See footnote[4], p. 27; See footnote[8]
	GC/MS	625	6410 B	6410 B–00.		
2. Ametryn	GC					See footnote[3], p. 83; See footnote[6], p S68
3. Aminocarb	TLC					See footnote[3], p. 94; See footnote[6], p. S16
4. Atraton	GC					See footnote[3], p. 83; See footnote[6], p. S68

TABLE ID—LIST OF APPROVED TEST PROCEDURES FOR PESTICIDES [1]—Continued

Parameter	Method	EPA [2, 7]	Standard Methods 18th, 19th, 20th Ed.	Standard Methods Online	ASTM	Other
5. Atrazine	GC					See footnote [3], p. 83; See footnote [6], p. S68; See footnote [9]
6. Azinphos methyl	GC					See footnote [3], p. 25; See footnote [6], p. S51
7. Barban	TLC					See footnote [3], p. 104; See footnote [6], p. S64
8. α–BHC	GC	608	6630 B & C		D3086–90, D5812–96(02)	See footnote [3], p. 7; See footnote [8]
	GC/MS	625 [5]	6410 B	6410 B–00.		
9. β–BHC	GC	608	6630 C		D3086–90, D5812–96(02)	See footnote [8]
	GC/MS	625 [5]	6410 B	6410 B–00.		
10. δ–BHC	GC	608	6630 C		D3086–90, D5812–96(02)	See footnote [8]
	GC/MS	625 [5]	6410 B	6410 B–00.		
11. γ-BHC (Lindane)	GC	608	6630 B & C		D3086–90, D5812–96(02)	See footnote [3], p. 7; See footnote [4], p. 27; See footnote [8]
	GC/MS	625	6410 B	6410 B–00.		
12. Captan	GC		6630 B		D3086–90, D5812–96(02)	See footnote [3], p. 7
13. Carbaryl	TLC					See footnote [3], p. 94, See footnote [6], p. S60
14. Carbo-phenothion	GC					See footnote [4], p. 27; See footnote [6], p. S73
15. Chlordane	GC	608	6630 B & C		D3086–90, D5812–96(02)	See footnote [3], p. 7; See footnote [4], p. 27; See footnote [8]
	GC/MS	625	6410 B	6410 B–00.		
16. Chloro-propham	TLC					See footnote [3], p. 104; See footnote [6], p. S64.
17. 2,4-D	GC		6640 B			See footnote [3], p. 115; See footnote [4], p. 40
18. 4,4′-DDD	GC	608	6630 B & C		D3086–90, D5812–96(02)	See footnote [3], p. 7; See footnote [4], p. 27; See footnote [8]
	GC/MS	625	6410 B	6410 B–00.		
19. 4,4′-DDE	GC	608	6630 B & C		D3086–90, D5812–96(02)	See footnote [3], p. 7; See footnote [4], p. 27; See footnote [8]
	GC/MS	625	6410 B	6410 B–00.		

20. 4,4′-DDT	GC	608	6630 B & C		D3086–90, D5812–96(02)	See footnote[3], p. 7; See footnote[4], p. 27; See footnote[8]
	GC/MS	625	6410 B	6410 B–00.		
21. Demeton-O	GC					See footnote[3], p. 25; See footnote[6], p. S51
22. Demeton-S	GC					See footnote[3], p. 25; See footnote[6], p. S51
23. Diazinon	GC					See footnote[3], p. 25; See footnote[4], p. 27; See footnote[6], p. S51
24. Dicamba	GC					See footnote[3], p. 115
25. Dichlofen-thion	GC					See footnote[4], p. 27; See footnote[6], p. S73
26. Dichloran	GC		6630 B & C			See footnote[3], p. 7
27. Dicofol	GC				D3086–90, D5812–96(02).	
28. Dieldrin	GC	608	6630 B & C			See footnote[3], p. 7; See footnote[4], p. 27; See footnote[8]
	GC/MS	625	6410 B	6410 B–00.		
29. Dioxathion	GC					See footnote[4], p. 27; See footnote[6], p. S73
30. Disulfoton	GC					See footnote[3], p. 25; See footnote[6], p. S51
31. Diuron	TLC					See footnote[3], p. 104; See footnote[6], p. S64
32. Endosulfan I	GC	608	6630 B & C		D3086–90, D5812–96(02)	See footnote[3], p. 7; See footnote[4], p. 27; See footnote[8]
	GC/MS	625[5]	6410 B	6410 B–00.		
33. Endosulfan II	GC	608	6630 B & C		D3086–90, D5812–96(02)	See footnote[3], p. 7; See footnote[8]
	GC/MS	625[5]	6410 B	6410 B–00.		
34. Endosulfan Sulfate	GC	608	6630 C			See footnote[8]
	GC/MS	625	6410 B	6410 B–00.		
35. Endrin	GC	608	6630 B & C		D3086–90, D5812–96(02)	See footnote[3], p. 7; See footnote[4], p. 27; See footnote[8]
	GC/MS	625[5]	6410 B	6410 B–00.		
36. Endrin aldehyde	GC	608				See footnote[8]
	GC/MS	625				
37. Ethion	GC					See footnote[4], p. 27; See footnote[6], p. S73
38. Fenuron	TLC					See footnote[3], p. 104; See footnote[6], p. S64
39. Fenuron-TCA	TLC					See footnote[3], p. 104; See footnote[6], p. S64

TABLE ID—LIST OF APPROVED TEST PROCEDURES FOR PESTICIDES [1]—Continued

Parameter	Method	EPA [2, 7]	Standard Methods 18th, 19th, 20th Ed.	Standard Methods Online	ASTM	Other
40. Heptachlor	GC GC/MS	608 625	6630 B & C 6410 B	 6410 B–00.	D3086–90, D5812–96(02)	See footnote [3], p. 7; See footnote [4], p. 27; See footnote [8]
41. Heptachlor epoxide	GC GC/MS	608 625	6630 B & C 6410 B	 6410 B–00.	D3086–90, D5812– 96(02)	See footnote [3], p. 7; See footnote [4], p. 27; See footnote [6], p. S73; See footnote [8]
42. Isodrin	GC					See footnote [4], p. 27; See footnote [6], p. S73
43. Linuron	GC					See footnote [3], p. 104; See footnote [6], p. S64
44. Malathion	GC		6630 C			See footnote [3], p. 25; See footnote [4], p. 27; See footnote [6], p. S51
45. Methiocarb	TLC					See footnote [3], p. 94; See footnote [6], p. S60
46. Methoxy-chlor	GC		6630 B & C		D3086–90, D5812–96(02).	See footnote [3], p. 7; See footnote [4], p. 27; See footnote [8]
47. Mexacar-bate	TLC					See footnote [3], p. 94; See footnote [6], p. S60
48. Mirex	GC		6630 B & C			See footnote [3], p. 7; See footnote [4], p. 27
49. Monuron	TLC					See footnote [3], p. 104; See footnote [6], p. S64
50. Monuron-TCA	TLC					See footnote [3], p. 104; See footnote [6], p. S64
51. Nuburon	TLC					See footnote [3], p. 104; See footnote [6], p. S64
52. Parathion methyl	GC		6630 C			See footnote [3], p. 25; See footnote [4], p. 27
53. Parathion ethyl	GC		6630 C			See footnote [3], p. 25; See footnote [4], p. 27
54. PCNB	GC		6630 B & C			See footnote [3], p. 7
55. Perthane	GC				D3086–90, D5812–96(02).	See footnote [4], p. 27
56. Prometon	GC					See footnote [3], p. 83; See footnote [6], p. S68; See footnote [9]
57. Prometryn	GC					See footnote [3], p. 83; See footnote [6], p. S68; See footnote [9]
58. Propazine	GC					See footnote [3], p. 83; See footnote [6], p. S68; See footnote [9]

59. Propham	TLC					See footnote[3], p. 104; See footnote[6], p. S64
60. Propoxur	TLC					See footnote[3], p. 94; See footnote[6], p. S60
61. Secbumeton	TLC					See footnote[3], p. 83; See footnote[6], p. S68
62. Siduron	TLC					See footnote[3], p. 104; See footnote[6], p. S64
63. Simazine	GC					See footnote[3], p. 83; See footnote[6], p. S68; See footnote[9]
64. Strobane	GC		6630 B & C			See footnote[3], p. 7
65. Swep	TLC					See footnote[3], p. 104; See footnote[6], p. S64
66. 2,4,5–T	GC		6640 B			See footnote[3], p. 115; See footnote[4], p. 40
67. 2,4,5–TP (Silvex)	GC		6640 B			See footnote[3], p. 115; See footnote[4], p. 40
68. Terbuthylazine	GC					See footnote[3], p. 83; See footnote[6], p. S68
69. Toxaphene	GC	608	6630 B & C		D3086–90, D5812–96(02).	See footnote[3], p. 7; See footnote[4], p. 27; See footnote[8]
	GC/MS	625	6410 B	6410 B–00.		
70. Trifluralin	GC		6630 B			See footnote[3], p. 7; See footnote[9]

---

[1] Pesticides are listed in this table by common name for the convenience of the reader. Additional pesticides may be found under Table IC, where entries are listed by chemical name.

[2] The full text of Methods 608 and 625 are given at Appendix A, "Test Procedures for Analysis of Organic Pollutants," of this part 136. The standardized test procedure to be used to determine the method detection limit (MDL) for these test procedures is given at Appendix B, "Definition and Procedure for the Determination of the Method Detection Limit," of this part 136.

[3] "Methods for Benzidine, Chlorinated Organic Compounds, Pentachlorophenol and Pesticides in Water and Wastewater," U.S. Environmental Protection Agency, September 1978. This EPA publication includes thin-layer chromatography (TLC) methods.

[4] "Methods for Analysis of Organic Substances in Water and Fluvial Sediments," Techniques of Water-Resources Investigations of the U.S. Geological Survey, Book 5, Chapter A3 (1987).

[5] The method may be extended to include α-BHC, γ-BHC, endosulfan I, endosulfan II, and endrin. However, when they are known to exist, Method 608 is the preferred method.

[6] "Selected Analytical Methods Approved and Cited by the United States Environmental Protection Agency." Supplement to the Fifteenth Edition of *Standard Methods for the Examination of Water and Wastewater* (1981).

[7] Each analyst must make an initial, one-time, demonstration of their ability to generate acceptable precision and accuracy with Methods 608 and 625 (See Appendix A of this part 136) in accordance with procedures given in Section 8.2 of each of these methods. Additionally, each laboratory, on an on-going basis, must spike and analyze 10% of all samples analyzed with Method 608 or 5% of all samples analyzed with Method 625 to monitor and evaluate laboratory data quality in accordance with Sections 8.3 and 8.4 of these methods. When the recovery of any parameter falls outside the warning limits, the analytical results for that parameter in the unspiked sample are suspect. The results should be reported, but cannot be used to demonstrate regulatory compliance. These quality control requirements also apply to the Standard Methods, ASTM Methods, and other methods cited.

[8] "Organochlorine Pesticides and PCBs in Wastewater Using Empore™ Disk", 3M Corporation, Revised 10/28/94.

[9] USGS Method 0–3106–93 from "Methods of Analysis by the U.S. Geological Survey National Water Quality Laboratory—Determination of Triazine and Other Nitrogen-containing Compounds by Gas Chromatography with Nitrogen Phosphorus Detectors" U.S. Geological Survey Open File Report 94–37.

TABLE IE—LIST OF APPROVED RADIOLOGIC TEST TEST PROCEDURES

Parameter and units	Method	Reference (method number or page)				
		EPA[1]	Standard Methods 18th, 19th, 20th Ed.	Standard Methods On-line	ASTM	USGS[2]
1. Alpha-Total, pCi per liter	Proportional or scintillation counter.	900.0	7110 B	7110 B–00	D1943–90, 96	pp. 75 and 78[3]
2. Alpha-Counting error, pCi per liter.	Proportional or scintillation counter.	Appendix B	7110 B	7110 B–00	D1943–90, 96	p. 79
3. Beta-Total, pCi per liter	Proportional counter	900.0	7110 B	7110 B–00	D1890–90, 96	pp. 75 and 78[3]
4. Beta-Counting error, pCi	Proportional counter	Appendix B	7110 B	7110 B–00	D1890–90, 96	p. 79
5. (a) Radium Total pCi per liter.	Proportional counter	903.0	7500-Ra B	7500-Ra B–01	D2460–90, 97	
(b) Ra, pCi per liter	Scintillation counter	903.1	7500-Ra C	7500-Ra C–01	D3454–91, 97	p. 81

---

[1] Prescribed Procedures for Measurement of Radioactivity in Drinking Water, EPA–600/4–80–032 (1980), U.S. Environmental Protection Agency, August 1980.

[2] Fishman, M. J. and Brown, Eugene, ''Selected Methods of the U.S. Geological Survey of Analysis of Wastewaters,'' U.S. Geological Survey, Open-File Report 76–177 (1976).

[3] The method found on p. 75 measures only the dissolved portion while the method on p. 78 measures only the suspended portion. Therefore, the two results must be added to obtain the ''total.''

TABLE IF—LIST OF APPROVED METHODS FOR PHARMACEUTICAL POLLUTANTS

Pharmaceuticals pollutants	CAS registry No.	Analytical method number
acetonitrile	75–05–8	1666/1671/D3371/D3695.
n-amyl acetate	628–63–7	1666/D3695.
n-amyl alcohol	71–41–0	1666/D3695
benzene	71–43–2	D4763/D3695/502.2/524.2.
n-butyl-acetate	123–86–4	1666/D3695.
tert-butyl alcohol	75–65–0	1666.
chlorobenzene	108–90–7	502.2/524.2.
chloroform	67–66–3	502.2/524.2/551.
o-dichlorobenzene	95–50–1	1625C/502.2/524.2.
1,2-dichloroethane	107–06–2	D3695/502.2/524.2.
diethylamine	109–89–7	1666/1671.
dimethyl sulfoxide	67–68–5	1666/1671.
ethanol	64–17–5	1666/1671/D3695.
ethyl acetate	141–78–6	1666/D3695.
n-heptane	142–82–5	1666/D3695.
n-hexane	110–54–3	1666/D3695.
isobutyraldehyde	78–84–2	1666/1667.
isopropanol	67–63–0	1666/D3695.
isopropyl acetate	108–21–4	1666/D3695.
isopropyl ether	108–20–3	1666/D3695.
methanol	67–56–1	1666/1671/D3695.
Methyl Cellosolve Δ	109–86–4	1666/1671
methylene chloride	75–09–2	502.2/524.2
methyl formate	107–31–3	1666.
4-methyl-2-pentanone (MIBK)	108–10–1	1624C/1666/D3695/D4763/524.2.
phenol	108–95–2	D4763.
n-propanol	71–23–8	1666/1671/D3695.
2-propanone (acetone)	67–64–1	D3695/D4763/524.2.
tetrahydrofuran	109–99–9	1666/524.2.
toluene	108–88–3	D3695/D4763/502.2/524.2.
triethlyamine	121–44–8	1666/1671.
xylenes	(Note 1)	1624C/1666.

TABLE 1F NOTE:

1. 1624C: m-xylene 108–38–3, o,p-xylene E–14095 (Not a CAS number; this is the number provided in the Environmental Monitoring Methods Index (EMMI) database.); 1666: m,p-xylene 136777–61–2, o-xylene 95–47–6.

TABLE IG—TEST METHODS FOR PESTICIDE ACTIVE INGREDIENTS

EPA Survey Code	Pesticide name	CAS No.	EPA Analytical Method No.(s)
8	Triadimefon	43121–43–3	507/633/525.1/1656
12	Dichlorvos	62–73–7	1657/507/622/525.1
16	2,4–D; 2,4–D Salts and Esters [2,4–Dichloro-phenoxyacetic acid].	94–75–7	1658/515.1/615/515.2/555
17	2,4–DB; 2,4–DB Salts and Esters [2,4–Dichlorophenoxybutyric acid].	94–82–6	1658/515.1/615/515.2/555
22	Mevinphos	7786–34–7	1657/507/622/525.1
25	Cyanazine	21725–46–2	629/507
26	Propachlor	1918–16–7	1656/508/608.1/525.1
27	MCPA; MCPA Salts and Esters [2–Methyl-4-chlorophenoxyacetic acid].	94–74–6	1658/615/555
30	Dichlorprop; Dichlorprop Salts and Esters [2–(2,4–Dichlorophenoxy) propionic acid].	120–36–5	1658/515.1/615/515.2/555
31	MCPP; MCPP Salts and Esters [2–(2–Methyl-4-chlorophenoxy) propionic acid].	93–65–2	1658/615/555
35	TCMTB [2–(Thiocyanomethylthio) benzo-thiazole].	21564–17–0	637
39	Pronamide	23950–58–5	525.1/507/633.1
41	Propanil	709–98–8	632.1/1656
45	Metribuzin	21087–64–9	507/633/525.1/1656
52	Acephate	30560–19–1	1656/1657

TABLE IG—TEST METHODS FOR PESTICIDE ACTIVE INGREDIENTS—Continued

EPA Survey Code	Pesticide name	CAS No.	EPA Analytical Method No.(s)
53	Acifluorfen	50594–66–6	515.1/515.2/555
54	Alachlor	15972–60–8	505/507/645/525.1/1656
55	Aldicarb	116–06–3	531.1
58	Ametryn	834–12–8	507/619/525.1
60	Atrazine	1912–24–9	505/507/619/525.1/1656
62	Benomyl	17804–35–2	631
68	Bromacil; Bromacil Salts and Esters.	314–40–9	507/633/525.1/1656
69	Bromoxynil	1689–84–5	1625/1661
69	Bromoxynil octanoate	1689–99–2	1656
70	Butachlor	23184–66–9	507/645/525.1/1656
73	Captafol	2425–06–1	1656
75	Carbaryl [Sevin]	63–25–2	531.1/632/553
76	Carbofuran	1563–66–2	531.1/632
80	Chloroneb	2675–77–6	1656/508/608.1/525.1
82	Chlorothalonil	1897–45–6	508/608.2/525.1/1656
84	Stirofos	961–11–5	1657/507/622/525.1
86	Chlorpyrifos	2921–88–2	1657/508/622
90	Fenvalerate	51630–58–1	1660
103	Diazinon	333–41–5	1657/507/614/622/525.1
107	Parathion methyl	298–00–0	1657/614/622
110	DCPA [Dimethyl 2,3,5,6-tetrachloro-terephthalate].	1861–32–1	508/608.2/525.1/515.1/515.2/1656
112	Dinoseb	88–85–7	1658/515.1/615/515.2/555
113	Dioxathion	78–34–2	1657/614.1
118	Nabonate [Disodium cyanodithioimidocarbonate].	138–93–2	630.1
119	Diuron	330–54–1	632/553
123	Endothall	145–73–3	548/548.1
124	Endrin	72–20–8	1656/505/508/608/617/525.1
125	Ethalfluralin	55283–68–6	1656/627 See footnote 1
126	Ethion	563–12–2	1657/614/614.1
127	Ethoprop	13194–48–4	1657/507/622/525.1
132	Fenarimol	60168–88–9	507/633.1/525.1/1656
133	Fenthion	55–38–9	1657/622
138	Glyphosate [N(Phosphonomethyl) glycine].	1071–83–6	547
140	Heptachlor	76–44–8	1656/505/508/608/617/525.1
144	Isopropalin	33820–53–0	1656/627
148	Linuron	330–55–2	553/632
150	Malathion	121–75–5	1657/614
154	Methamidophos	10265–92–6	1657
156	Methomyl	16752–77–5	531.1/632
158	Methoxychlor	72–43–5	1656/505/508/608.2/617/525.1
172	Nabam	142–59–6	630/630.1
173	Naled	300–76–5	1657/622
175	Norflurazon	27314–13–2	507/645/525.1/1656
178	Benfluralin	1861–40–1	11656/1627
182	Fensulfothion	115–90–2	1657/622
183	Disulfoton	298–04–4	1657/507/614/622/525.1
185	Phosmet	732–11–6	1657/622.1
186	Azinphos Methyl	86–50–0	1657/614/622
192	Organo-tin pesticides	12379–54–3	Ind-01/200.7/200.9
197	Bolstar	35400–43–2	1657/622
203	Parathion	56–38–2	1657/614
204	Pendimethalin	40487–42–1	1656
205	Pentachloronitrobenzene	82–68–8	1656/608.1/617
206	Pentachlorophenol	87–86–5	625/1625/515.2/555/515.1/ 525.1
208	Permethrin	52645–53–1	608.2/508/525.1/1656/1660
212	Phorate	298–02–2	1657/622
218	Busan 85 [Potassium dimethyldithiocarbamate].	128–03–0	630/630.1

TABLE IG—TEST METHODS FOR PESTICIDE ACTIVE INGREDIENTS—Continued

EPA Survey Code	Pesticide name	CAS No.	EPA Analytical Method No.(s)
219	Busan 40 [Potassium N-hydroxymethyl-N-methyldithiocarbamate].	51026–28–9	630/630.1
220	KN Methyl [Potassium N-methyl-dithiocarbamate].	137–41–7	630/630.1
223	Prometon	1610–18–0	507/619/525.1
224	Prometryn	7287–19–6	507/619/525.1
226	Propazine	139–40–2	507/619/525.1/1656
230	Pyrethrin I	121–21–1	1660
232	Pyrethrin II	121–29–9	1660
236	DEF [S,S,S–Tributyl phosphorotrithioate].	78–48–8	1657
239	Simazine	122–34–9	505/507/619/525.1/1656
241	Carbam-S [Sodium dimethyldithiocarbanate].	128–04–1	630/630.1
243	Vapam [Sodium methyldithiocarbamate].	137–42–8	630/630.1
252	Tebuthiuron	34014–18–1	507/525.1
254	Terbacil	5902–51–2	507/633/525.1/1656
255	Terbufos	13071–79–9	1657/507/614.1/525.1
256	Terbuthylazine	5915–41–3	619/1656
257	Terbutryn	886–50–0	507/619/525.1
259	Dazomet	533–74–4	630/630.1/1659
262	Toxaphene	8001–35–2	1656/505/508/608/617/525.1
263	Merphos [Tributyl phosphorotrithioate].	150–50–5	1657/507/525.1/622
264	Trifluralin	1582–09–8	1656/508/617/627/525.1
268	Ziram [Zinc dimethyldithiocarbamate].	137–30–4	630/630.1

[1] Monitor and report as total Trifluralin.

TABLE IH—LIST OF APPROVED MICROBIOLOGICAL METHODS FOR AMBIENT WATER

Parameter and units	Method[1]	EPA	Standard methods 18th, 19th, 20th Ed.	Standard methods online	AOAC, ASTM, USGS	Other
Bacteria:						
1. E. coli, number per 100 mL.	MPN[6,8,14] multiple tube,		9221 B.1/9221 F[11,13]	9221 B.1–99/9221 F[11,13].		
	Multiple tube/multiple well,		9223 B[12]	9223 B–97[12]	991.15[10]	Colilert®[12,16] Colilert-18®[12,15,16].
	MF[2,5,6,7,8] two step, or	1103.1[19]	9222 B/9222 G[18], 9213 D.	9222 B–97/9222 G[18]	D5392–93[9].	
	Single step	1603[20], 1604[21]				mColiBlue-24®[17].
2. Enterococci, number per 100 mL.	MPN[6,8] multiple tube,		9230 B	9230 B–93.		
	Multiple tube/multiple well				D6503–99[9]	Enterolert®[12,22].
	MF[2,5,6,7,8] two step	1106.1[23]	9230 C	9230 C–93	D5259–92[9].	
	Single step, or	1600[24].				
	Plate count	p. 143[3].				
Protozoa:						
3. *Cryptosporidium*	Filtration/IMS/FA	1622[25],1623[26].				
4. *Giardia*	Filtration/IMS/FA	1623[26].				

[1] The method must be specified when results are reported.

[2] A 0.45 µm membrane filter (MF) or other pore size certified by the manufacturer to fully retain organisms to be cultivated and to be free of extractables which could interfere with their growth.

[3] USEPA. 1978. Microbiological Methods for Monitoring the Environment, Water, and Wastes. Environmental Monitoring and Support Laboratory, U.S. Environmental Protection Agency, Cincinnati, OH. EPA/600/8–78/017.

[4] [Reserved]

[5] Because the MF technique usually yields low and variable recovery from chlorinated wastewaters, the Most Probable Number method will be required to resolve any controversies.

[6] Tests must be conducted to provide organism enumeration (density). Select the appropriate configuration of tubes/filtrations and dilutions/volumes to account for the quality, character, consistency, and anticipated organism density of the water sample.

[7] When the MF method has not been used previously to test waters with high turbidity, large number of noncoliform bacteria, or samples that may contain organisms stressed by chlorine, a parallel test should be conducted with a multiple-tube technique to demonstrate applicability and comparability of results.

[8] To assess the comparability of results obtained with individual methods, it is suggested that side-by-side tests be conducted across seasons of the year with the water samples routinely tested in accordance with the most current Standard Methods for the Examination of Water and Wastewater or EPA alternate test procedure (ATP) guidelines.

[9] ASTM. 2000, 1999, 1996. Annual Book of ASTM Standards—Water and Environmental Technology. Section 11.02. ASTM International. 100 Barr Harbor Drive, West Conshohocken, PA 19428.

[10] AOAC. 1995. Official Methods of Analysis of AOAC International, 16th Edition, Volume I, Chapter 17. Association of Official Analytical Chemists International. 481 North Frederick Avenue, Suite 500, Gaithersburg, MD 20877–2417.

[11] The multiple-tube fermentation test is used in 9221B.1. Lactose broth may be used in lieu of lauryl tryptose broth (LTB), if at least 25 parallel tests are conducted between this broth and LTB using the water samples normally tested, and this comparison demonstrates that the false-positive rate and false-negative rate for total coliform using lactose broth is less than 10 percent. No requirement exists to run the completed phase on 10 percent of all total coliform-positive tubes on a seasonal basis.

[12] These tests are collectively known as defined enzyme substrate tests, where, for example, a substrate is used to detect the enzyme β-glucuronidase produced by *E. coli*.

[13] After prior enrichment in a presumptive medium for total coliform using 9221B.1, all presumptive tubes or bottles showing any amount of gas, growth or acidity within 48 h ± 3 h of incubation shall be submitted to 9221F. Commercially available EC–MUG media or EC media supplemented in the laboratory with 50 µg/mL of MUG may be used.

[14] Samples shall be enumerated by the multiple-tube or multiple-well procedure. Using multiple-tube procedures, employ an appropriate tube and dilution configuration of the sample as needed and report the Most Probable Number (MPN). Samples tested with Colilert® may be enumerated with the multiple-well procedures, Quanti-Tray® or Quanti-Tray® 2000, and the MPN calculated from the table provided by the manufacturer.

[15] Colilert-18® is an optimized formulation of the Colilert® for the determination of total coliforms and E. coli that provides results within 18 h of incubation at 35 °C rather than the 24 h required for the Colilert® test and is recommended for marine water samples.

[16] Descriptions of the Colilert®, Colilert-18®, Quanti-Tray®, and Quanti-Tray®/2000 may be obtained from IDEXX Laboratories, Inc., 1 IDEXX Drive, Westbrook, ME 04092.

[17] A description of the mColiBlue24® test, Total Coliforms and *E. coli*, is available from Hach Company, 100 Dayton Ave., Ames, IA 50010.

[18] Subject total coliform positive samples determined by 9222B or other membrane filter procedure to 9222G using NA–MUG media.

[19] USEPA. July 2006. Method 1103.1: *Escherichia coli* (*E. coli*) in Water by Membrane Filtration Using membrane-Thermotolerant *Escherichia coli* Agar (mTEC). U.S. Environmental Protection Agency, Office of Water, Washington, DC EPA–821–R–06–010.

[20] USEPA. July 2006. Method 1603: *Escherichia coli* (*E. coli*) in Water by Membrane Filtration Using Modified membrane-Thermotolerant *Escherichia coli* Agar (Modified mTEC). U.S. Environmental Protection Agency, Office of Water, Washington, DC EPA–821–R–06–011.

[21] Preparation and use of MI agar with a standard membrane filter procedure is set forth in the article, Brenner et al. 1993. ''New Medium for the Simultaneous Detection of Total Coliform and *Escherichia coli* in Water.'' Appl. Environ. Microbiol. 59:3534–3544 and in USEPA. September 2002.: Method 1604: Total Coliforms and *Escherichia coli* (*E. coli*) in Water by Membrane Filtration by Using a Simultaneous Detection Technique (MI Medium). U.S. Environmental Protection Agency, Office of Water, Washington, DC EPA 821–R–02–024.

[22] A description of the Enterolert® test may be obtained from IDEXX Laboratories, Inc., 1 IDEXX Drive, Westbrook, ME 04092.

[23] USEPA. July 2006. Method 1106.1: Enterococci in Water by Membrane Filtration Using membrane-Enterococcus-Esculin Iron Agar (mE–EIA). U.S. Environmental Protection Agency, Office of Water, Washington, DC EPA–821–R–06–008.

[24] USEPA. July 2006. Method 1600: Enterococci in Water by Membrane Filtration Using membrane-Enterococcus Indoxyl-β-D-Glucoside Agar (mEI). U.S. Environmental Protection Agency, Office of Water, Washington, DC EPA–821–R–06–009.

[25] Method 1622 uses filtration, concentration, immunomagnetic separation of oocysts from captured material, immunofluorescence assay to determine concentrations, and confirmation through vital dye staining and differential interference contrast microscopy for the detection of *Cryptosporidium*. USEPA. 2001. Method 1622: *Cryptosporidium* in Water by Filtration/IMS/FA. U.S. Environmental Protection Agency, Office of Water, Washington, DC EPA–821–R–01–026.

[26] Method 1623 uses filtration, concentration, immunomagnetic separation of oocysts and cysts from captured material, immunofluorescence assay to determine concentrations, and confirmation through vital dye staining and differential interference contrast microscopy for the simultaneous detection of *Cryptosporidium* and *Giardia* oocysts and cysts. USEPA. 2001. Method 1623. *Cryptosporidium* and *Giardia* in Water by Filtration/IMS/FA. U.S. Environmental Protection Agency, Office of Water, Washington, DC EPA–821–R–01–025.

(b) The full texts of the methods from the following references which are cited in Tables IA, IB, IC, ID, IE, IF, IG and IH are incorporated by reference into this regulation and may be obtained from the source identified. All costs cited are subject to change and must be verified from the indicated source. The full texts of all the test procedures cited are available for inspection at the National Archives and Records Administration (NARA). For information on the availability of this material at NARA, call 202–741–6030, or go to: *http://www.archives.gov/federal__register/code__of__federal__regulations/ibr__locations.html.*

REFERENCES, SOURCES, COSTS, AND TABLE CITATIONS:

(1) The full texts of Methods 601–613, 624, 625, 1613, 1624, and 1625 are printed in appendix A of this part 136. The full text for determining the method detection limit when using the test procedures is given in appendix B of this part 136. The full text of Method 200.7 is printed in appendix C of this part 136. Cited in: Table IB, Note 5; Table IC, Note 2; and Table ID, Note 2.

(2) USEPA. 1978. Microbiological Methods for Monitoring the Environment, Water, and Wastes. Environmental Monitoring and Support Laboratory, U.S. Environmental Protection Agency, Cincinnati, Ohio. EPA/600/8–78/017. Available at *http://www.epa.gov/clariton/srch.htm* or from: National Technical Information Service, 5285 Port Royal Road, Springfield, Virginia 22161, Pub. No. PB–290329/A.S. Table IA, Note 3; Table IH, Note 3.

(3) ''Methods for Chemical Analysis of Water and Wastes,'' U.S. Environmental Protection Agency, EPA–600/4–79–020, March 1979, or ''Methods for Chemical Analysis of Water and Wastes,'' U.S. Environmental Protection Agency, EPA–600/4–79–020, Revised March 1983. Available from: ORD Publications, CERI, U.S. Environmental Protection Agency, Cincinnati, Ohio 45268, Table IB, Note 1.

(4) ''Methods for Benzidine, Chlorinated Organic Compounds, Pentachlorophenol and Pesticides in Water and Wastewater,'' U.S. Environmental Protection Agency, 1978. Available from: ORD Publications, CERI, U.S. Environmental Protection Agency, Cincinnati, Ohio 45268, Table IC, Note 3; Table D, Note 3.

(5) ''Prescribed Procedures for Measurement of Radioactivity in Drinking Water,'' U.S. Environmental Protection Agency, EPA–600/4–80–032, 1980. Available from: ORD Publications, CERI, U.S. Environmental Protection Agency, Cincinnati, Ohio 45268, Table IE, Note 1.

(6) American Public Health Association. 1992, 1995, and 1998. Standard Methods for the Examination of Water and Wastewater. 18th, 19th, and 20th Edition (respectively). Available from: American Public Health Association, 1015 15th Street, NW., Washington, DC 20005. Standard Methods Online is available through the Standard Methods Web site (*http://www.standardmethods.org*). Tables IA, IB, IC, ID, IE, and IH.

(7) Ibid, 15th Edition, 1980. Table IB, Note 30; Table ID.

(8) Ibid, 14th Edition, 1975. Table IB, Notes 17 and 27.

(9) ''Selected Analytical Methods Approved and Cited by the United States Environmental Protection Agency,'' Supplement to the 15th Edition of Standard Methods for the Examination of Water and Wastewater, 1981. Available from: American Public Health Association, 1015 Fifteenth Street NW., Washington, DC 20036. Cost available from publisher. Table IB, Note 10; Table IC, Note 6; Table ID, Note 6.

(10) ASTM International. Annual Book of ASTM Standards, Water, and Environmental Technology, Section 11, Volumes 11.01 and 11.02, 1994, 1996, 1999, Volume 11.02, 2000, and individual standards published after 2000. Available from: ASTM International, 100 Barr Harbor Drive, P.O. Box C700, West Conshohocken, PA 19428–2959, or *http://www.astm.org*. Tables IA, IB, IC, ID, IE, and IH.

(11) USGS. 1989. U.S. Geological Survey Techniques of Water-Resources Investigations, Book 5, Laboratory Analysis, Chapter A4, Methods for Collection and Analysis of Aquatic Biological and Microbiological Samples, U.S. Geological Survey, U.S. Department of the Interior, Reston, Virginia. Available

from USGS Books and Open-File Reports Section, Federal Center, Box 25425, Denver, Colorado 80225. Table IA, Note 5; Table IH.

(12) ''Methods for Determination of Inorganic Substances in Water and Fluvial Sediments,'' by M.J. Fishman and Linda C. Friedman, Techniques of Water-Resources Investigations of the U.S. Geological Survey, Book 5 Chapter A1 (1989). Available from: U.S. Geological Survey, Denver Federal Center, Box 25425, Denver, CO 80225. Cost: $108.75 (subject to change). Table IB, Note 2.

(13) ''Methods for Determination of Inorganic Substances in Water and Fluvial Sediments,'' N.W. Skougstad and others, editors. Techniques of Water-Resources Investigations of the U.S. Geological Survey, Book 5, Chapter A1 (1979). Available from: U.S. Geological Survey, Denver Federal Center, Box 25425, Denver, CO 80225. Cost: $10.00 (subject to change), Table IB, Note 8.

(14) ''Methods for the Determination of Organic Substances in Water and Fluvial Sediments,'' Wershaw, R.L., et al, Techniques of Water-Resources Investigations of the U.S. Geological Survey, Book 5, Chapter A3 (1987). Available from: U.S. Geological Survey, Denver Federal Center, Box 25425, Denver, CO 80225. Cost: $0.90 (subject to change). Table IB, Note 24; Table ID, Note 4.

(15) ''Water Temperature—Influential Factors, Field Measurement and Data Presentation,'' by H.H. Stevens, Jr., J. Ficke, and G.F. Smoot, Techniques of Water-Resources Investigations of the U.S. Geological Survey, Book 1, Chapter D1, 1975. Available from: U.S. Geological Survey, Denver Federal Center, Box 25425, Denver, CO 80225. Cost: $1.60 (subject to change). Table IB, Note 32.

(16) ''Selected Methods of the U.S. Geological Survey of Analysis of Wastewaters,'' by M.J. Fishman and Eugene Brown; U.S. Geological Survey Open File Report 76–77 (1976). Available from: U.S. Geological Survey, Branch of Distribution, 1200 South Eads Street, Arlington, VA 22202. Cost: $13.50 (subject to change). Table IE, Note 2.

(17) AOAC-International. Official Methods of Analysis of AOAC-International, 16th Edition, (1995). Available from: AOAC-International, 481 North Frederick Avenue, Suite 500, Gaithersburg, MD 20877. Table IB, See footnote 3.

(18) ''American National Standard on Photographic Processing Effluents,'' April 2, 1975. Available from: American National Standards Institute, 1430 Broadway, New York, New York 10018. Table IB, Note 9.

(19) ''An Investigation of Improved Procedures for Measurement of Mill Effluent and Receiving Water Color,'' NCASI Technical Bulletin No. 253, December 1971. Available from: National Council of the Paper Industry for Air and Stream Improvements, Inc., 260 Madison Avenue, New York, NY 10016. Cost available from publisher. Table IB, Note 18.

(20) Ammonia, Automated Electrode Method, Industrial Method Number 379–75WE, dated February 19, 1976. Technicon Auto Analyzer II. Method and price available from Technicon Industrial Systems, Tarrytown, New York 10591. Table IB, Note 7.

(21) Chemical Oxygen Demand, Method 8000, Hach Handbook of Water Analysis, 1979. Method price available from Hach Chemical Company, P.O. Box 389, Loveland, Colorado 80537. Table IB, Note 14.

(22) OIC Chemical Oxygen Demand Method, 1978. Method and price available from Oceanography International Corporation, 512 West Loop, P.O. Box 2980, College Station, Texas 77840. Table IB, Note 13.

(23) ORION Research Instruction Manual, Residual Chlorine Electrode Model 97–70, 1977. Method and price available from ORION Research Incorporation, 840 Memorial Drive, Cambridge, Massachusetts 02138. Table IB, Note 16.

(24) Bicinchoninate Method for Copper. Method 8506, Hach Handbook of Water Analysis, 1979, Method and price available from Hach Chemical Company, P.O. Box 300, Loveland, Colorado 80537. Table IB, Note 19.

(25) Hydrogen Ion (pH) Automated Electrode Method, Industrial Method Number 378–75WA. October 1976. Bran & Luebbe (Technicon) Auto Analyzer II. Method and price available from Bran & Luebbe Analyzing Technologies, Inc. Elmsford, N.Y. 10523. Table IB, Note 21.

(26) 1,10-Phenanthroline Method using FerroVer Iron Reagent for Water,

Hach Method 8008, 1980. Method and price available from Hach Chemical Company, P.O. Box 389 Loveland, Colorado 80537. Table IB, Note 22.

(27) Periodate Oxidation Method for Manganese, Method 8034, Hach Handbook for Water Analysis, 1979. Method and price available from Hach Chemical Company, P.O. Box 389, Loveland, Colorado 80537. Table IB, Note 23.

(28) Nitrogen, Nitrite—Low Range, Diazotization Method for Water and Wastewater, Hach Method 8507, 1979. Method and price available from Hach Chemical Company, P.O. Box 389, Loveland, Colorado 80537. Table IB, Note 25.

(29) Zincon Method for Zinc, Method 8009. Hach Handbook for Water Analysis, 1979. Method and price available from Hach Chemical Company, P.O. Box 389, Loveland, Colorado 80537. Table IB, Note 33.

(30) ''Direct Determination of Elemental Phosphorus by Gas-Liquid Chromatography,'' by R.F. Addison and R.G. Ackman, Journal of Chromatography, Volume 47, No. 3, pp. 421–426, 1970. Available in most public libraries. Back volumes of the Journal of Chromatography are available from Elsevier/North-Holland, Inc., Journal Information Centre, 52 Vanderbilt Avenue, New York, NY 10164. Cost available from publisher. Table IB, Note 28.

(31) ''Direct Current Plasma (DCP) Optical Emission Spectrometric Method for Trace Elemental Analysis of Water and Wastes'', Method AES 0029, 1986-Revised 1991, Fison Instruments, Inc., 32 Commerce Center, Cherry Hill Drive, Danvers, MA 01923. Table B, Note 34.

(32) ''Closed Vessel Microwave Digestion of Wastewater Samples for Determination of Metals, CEM Corporation, P.O. Box 200, Matthews, North Carolina 28106–0200, April 16, 1992. Available from the CEM Corporation. Table IB, Note 36.

(33) ''Organochlorine Pesticides and PCBs in Wastewater Using Empore™ Disk'' Test Method 3M 0222, Revised 10/28/94. 3M Corporation, 3M Center Building 220–9E–10, St. Paul, MN 55144–1000. Method available from 3M Corporation. Table IC, Note 8 and Table ID, Note 8.

(34) USEPA. October 2002. Methods for Measuring the Acute Toxicity of Effluents and Receiving Waters to Freshwater and Marine Organisms. Fifth Edition. U.S. Environmental Protection Agency, Office of Water, Washington, DC EPA 821–R–02–012. Available at *http://www.epa.gov/epahome/index/sources.htm* or from National Technical Information Service, 5285 Port Royal Road, Springfield, Virginia 22161, Pub. No. PB2002–108488. Table IA, Note 25.

(35) ''Nitrogen, Total Kjeldahl, Method PAI-DK01 (Block Digestion, Steam Distillation, Titrimetric Detection)'', revised 12/22/94. Available from Perstorp Analytical Corporation, 9445 SW Ridder Rd., Suite 310, P.O. Box 648, Wilsonville, OK 97070. Table IB, Note 39.

(36) ''Nitrogen, Total Kjeldahl, Method PAI-DK02 (Block Digestion, Steam Distillation, Colorimetric Detection)'', revised 12/22/94. Available from Perstorp Analytical Corporation, 9445 SW Ridder Rd., Suite 310, P.O. Box 648, Wilsonville, OK 97070. Table IB, Note 40.

(37) ''Nitrogen, Total Kjeldahl, Method PAI-DK03 (Block Digestion, Automated FIA Gas Diffusion)'', revised 12/22/94. Available from Perstorp Analytical Corporation, 9445 SW Ridder Rd., Suite 310, P.O. Box 648, Wilsonville, OK 97070. Table IB, Note 41.

(38) USEPA. October 2002. Short-Term Methods for Measuring the Chronic Toxicity of Effluents and Receiving Waters to Freshwater Organisms. Fourth Edition. U.S. Environmental Protection Agency, Office of Water, Washington, DC EPA 821–R–02–013. Available at *http://www.epa.gov/epahome/index/sources.htm* or from National Technical Information Service, 5285 Port Royal Road, Springfield, Virginia 22161, Pub. No. PB2002–108489. Table IA, Note 26.

(39) USEPA. October 2002. Short-Term Methods for Measuring the Chronic Toxicity of Effluents and Receiving Waters to Marine and Estuarine Organisms. Third Edition. U.S. Environmental Protection Agency, Office of Water, Washington, DC EPA 821–R–02–014. Available at *http://www.epa.gov/epahome/index/sources.htm* or from National Technical Information Service, 5285 Port Royal Road, Springfield, Virginia 22161, Pub. No. PB2002–108490. Table IA, Note 27.

(40) EPA Methods 1666, 1667, and 1671 listed in the table above are published in the compendium titled Analytical Methods for the Determination of Pollutants in Pharmaceutical Manufacturing Industry Wastewaters (EPA 821–B–98–016). EPA Methods 502.2 and 524.2 have been incorporated by reference into 40 CFR 141.24 and are in Methods for the Determination of Organic Compounds in Drinking Water, EPA–600/4–88–039, December 1988, Revised, July 1991, and Methods for the Determination of Organic Compounds in Drinking Water-Supplement II, EPA–600/R–92–129, August 1992, respectively. These EPA test method compendia are available from the National Technical Information Service, NTIS PB91–231480 and PB92–207703, U.S. Department of Commerce, 5285 Port Royal Road, Springfield, Virginia 22161. The toll-free number is 800–553–6847. ASTM test methods D3371, D3695, and D4763 are available from the American Society for Testing and Materials, 100 Barr Harbor Drive, West Conshohocken, PA 19428–2959.

(41) USEPA. 2002. Method 1631, Revision E, ''Mercury in Water by Oxidation, Purge and Trap, and Cold Vapor Atomic Fluorescence Spectrometry.'' September 2002. Office of Water, U.S. Environmental Protection Agency (EPA–821–R–02–019). Available from: National Technical Information Service, 5285 Port Royal Road, Springfield, Virginia 22161. Publication No. PB2002–108220. Cost: $25.50 (subject to change).

(42) [Reserved]

(43) Method OIA–1677, Available Cyanide by Flow Injection, Ligand Exchange, and Amperometry. August 1999. ALPKEM, OI Analytical, Box 648, Wilsonville, Oregon 97070 (EPA–821–R–99–013). Available from: National Technical Information Service, 5285 Port Royal Road, Springfield, Virginia 22161. Publication No. PB99–132011. Cost: $22.50. Table IB, Note 44.

(44) ''Methods of Analysis by the U.S. Geological Survey National Water Quality Laboratory Determination of Ammonium Plus Organic Nitrogen by a Kjeldahl Digestion Method and an Automated Photometric Finish that Includes Digest Cleanup by Gas Diffusion'', Open File Report (OFR) 00–170. Available from: U.S. Geological Survey, Denver Federal Center, Box 25425, Denver, CO 80225. Table IB, Note 45.

(45) ''Methods of Analysis by the U.S. Geological Survey National Water Quality Laboratory—Determination of Chromium in Water by Graphite Furnace Atomic Absorption Spectrophotometry'', Open File Report (OFR) 93–449. Available from: U.S. Geological Survey, Denver Federal Center, Box 25425, Denver, CO 80225. Table IB, Note 46.

(46) ''Methods of Analysis by the U.S. Geological Survey National Water Quality Laboratory—Determination of Molybdenum in Water by Graphite Furnace Atomic Absorption Spectrophotometry'', Open File Report (OFR) 97–198. Available from: U.S. Geological Survey, Denver Federal Center, Box 25425, Denver, CO 80225. Table IB, Note 47.

(47) ''Methods of Analysis by the U.S. Geological Survey National Water Quality Laboratory—Determination of Total Phosphorus by Kjeldahl Digestion Method and an Automated Colorimetric Finish That Includes Dialysis'' Open File Report (OFR) 92–146. Available from: U.S. Geological Survey, Denver Federal Center, Box 25425, Denver, CO 80225. Table IB, Note 48.

(48) ''Methods of Analysis by the U.S. Geological Survey National Water Quality Laboratory—Determination of Arsenic and Selenium in Water and Sediment by Graphite Furnace—Atomic Absorption Spectrometry'' Open File Report (OFR) 98–639. Table IB, Note 49.

(49) ''Methods of Analysis by the U.S. Geological Survey National Water Quality Laboratory—Determination of Elements in Whole-Water Digests Using Inductively Coupled Plasma-Optical Emission Spectrometry and Inductively Coupled Plasma-Mass Spectrometry'' , Open File Report (OFR) 98–165. Available from: U.S. Geological Survey, Denver Federal Center, Box 25425, Denver, CO 80225. Table IB, Note 50.

(50) ''Methods of Analysis by the U.S. Geological Survey National Water Quality Laboratory—Determination of Triazine and Other Nitrogen-containing Compounds by Gas Chromatography with Nitrogen Phosphorus Detectors'' U.S.Geological Survey Open File Report 94–37. Available from: U.S.

Geological Survey, Denver Federal Center, Box 25425, Denver, CO 80225. Table ID, Note 9.

(51) ''Methods of Analysis by the U.S. Geological Survey National Water Quality Laboratory—Determination of Inorganic and Organic Constituents in Water and Fluvial Sediments'', Open File Report (OFR) 93–125. Available from: U.S. Geological Survey, Denver Federal Center, Box 25425, Denver, CO 80225. Table IB, Note 51; Table IC, Note 9.

(52) IDEXX Laboratories, Inc. 2002. Description of Colilert®, Colilert-18®, Quanti-Tray®, Quanti-Tray®/2000, Enterolert® methods are available from IDEXX Laboratories, Inc., One Idexx Drive, Westbrook, Maine 04092. Table IA, Notes 17 and 23; Table IH, Notes 16 and 22.

(53) Hach Company, Inc. Revision 2, 1999. Description of m-ColiBlue24® Method, Total Coliforms and *E. coli*, is available from Hach Company, 100 Dayton Ave, Ames IA 50010. Table IA, Note 18; Table IH, Note 17.

(54) USEPA. July 2006. Method 1103.1: *Escherichia coli* (*E. coli*) in Water by Membrane Filtration Using membrane-Thermotolerant *Escherichia coli* Agar (mTEC). U.S. Environmental Protection Agency, Office of Water, Washington DC EPA–621–R–06–010. Available at *http://www.epa.gov/waterscience/methods/*. Table IH, Note 19.

(55) USEPA. July 2006. Method 1106.1: Enterococci in Water by Membrane Filtration Using membrane-Enterococcus-Esculin Iron Agar (mE–EIA). U.S. Environmental Protection Agency, Office of Water, Washington DC EPA–621–R–06–008. Available at *http://www.epa.gov/waterscience/methods/*. Table IH, Note 23

(56) USEPA. July 2006. Method 1603: *Escherichia coli* (*E. coli*) in Water by Membrane Filtration Using Modified membrane-Thermotolerant *Escherichia coli* Agar (Modified mTEC). U.S. Environmental Protection Agency, Office of Water, Washington DC EPA–821–R–06–011. Available at *http://www.epa.gov/waterscience/methods/*. Table IH, Note 19; Table IH, Note 20.

(57) Brenner *et al*. 1993. New Medium for the Simultaneous Detection of Total Coliforms and *Escherichia coli* in Water. Appl. Environ. Microbiol. 59:3534–3544. Available from the American Society for Microbiology, 1752 N Street NW., Washington DC 20036. Table IH, Note 21.

(58) USEPA. September 2002. Method 1604: Total Coliforms and *Escherichia coli* (*E. coli*) in Water by Membrane Filtration Using a Simultaneous Detection Technique (MI Medium). U.S. Environmental Protection Agency, Office of Water, Washington DC EPA–821–R–02–024. Available at *http://www.epa.gov/waterscience/methods/*. Table IH, Note 20.

(59) USEPA. July 2006. Method 1600: Enterococci in Water by Membrane Filtration Using membrane-Enterococcus Indoxyl-β-D-Glucoside Agar (mEI). U.S. Environmental Protection Agency, Office of Water, Washington DC EPA–821–R–06–009. Available at *http://www.epa.gov/waterscience/methods/*. Table IA, Note 24; Table IH, Note 24.

(60) USEPA. April 2001. Method 1622: *Cryptosporidium* in Water by Filtration/IMS/FA. U.S. Environmental Protection Agency, Office of Water, Washington DC EPA–821–R–01–026. Available at *http://www.epa.gov/waterscience/methods/*. Table IH, Note 25.

(61) USEPA. April 2001. Method 1623: *Cryptosporidium* and *Giardia* in Water by Filtration/IMS/FA. U.S. Environmental Protection Agency, Office of Water, Washington DC. EPA–821–R–01–025. Available at *http://www.epa.gov/waterscience/methods/*. Table IH, Note 26.

(62) AOAC. 1995. Official Methods of Analysis of AOAC International, 16th Edition, Volume I, Chapter 17. AOAC International, 481 North Frederick Avenue, Suite 500, Gaithersburg, Maryland 20877–2417. Table IA, Note 11; Table IH.

(63) Waters Corporation. Method D6508, Rev. 2, ''Test Method for Determination of Dissolved Inorganic Anions in Aqueous Matrices Using Capillary Ion Electrophoresis and Chromate Electrolyte,'' available from Waters Corp, 34 Maple Street, Milford, MA 01757, Telephone: 508/482–2131, Fax: 508/482–3625, Table IB, See footnote 54.

(64) Kelada-01, ''Kelada Automated Test Methods for Total Cyanide, Acid Dissociable Cyanide, and Thiocyanate,'' EPA 821–B–01–009 Revision 1.2, August 2001 is available from

National Technical Information Service (NTIS), 5285 Port Royal Road, Springfield, VA 22161 [Order Number PB 2001–108275]. Telephone: 800–553–6847. Table IB, See footnote 55.

(65) QuikChem Method 10–204–00–1–X, ''Digestion and Distillation of Total Cyanide in Drinking and Wastewaters using MICRO DIST and Determination of Cyanide by Flow Injection Analysis'' Revision 2.2, March 2005 is available from Lachat Instruments 6645 W. Mill Road, Milwaukee, WI 53218, Telephone: 414–358–4200. Table IB, See footnote 56.

(66) ''Methods for the Determination of Metals in Environmental Samples,'' Supplement I, National Exposure Risk Laboratory-Cincinnati (NERL–CI), EPA/600/R–94/111, May 1994; and ''Methods for the Determination of Inorganic Substances in Environmental Samples,'' NERL–CI, EPA/600/R–93/100, August, 1993 are available from National Technical Information Service (NTIS), 5285 Port Royal Road, Springfield, VA 22161. Telephone: 800–553–6847. Table IB.

(67) ''Determination of Inorganic Ions in Drinking Water by Ion Chromatography,'' Rev. 1.0, 1997 is available from from *http://www.epa.gov/safetwater/methods/met300.pdf*. Table IB.

(68) Table IG Methods are available in ''Methods For The Determination of Nonconventional Pesticides In Municipal and Industrial Wastewater, Volume I,'' EPA 821–R–93–010A, August 1993 Revision I, and ''Methods For The Determination of Nonconventional Pesticides In Municipal and Industrial Wastewater, Volume II,'' EPA 821–R–93–010B (August 1993) are available from National Technical Information Service (NTIS), 5285 Port Royal Road, Springfield, VA 22161. Telephone: 800–553–6847.

(69) Method 245.7, Rev. 2.0, ''Mercury in Water by Cold Vapor Atomic Fluorescence Spectrometry,'' February 2005, EPA–821–R–05–001, available from the U.S. EPA Sample Control Center (operated by CSC), 6101 Stevenson Avenue, Alexandria, VA 22304, Telephone: 703–461–8056. Table IB, See footnote 59.

(70) USEPA. July 2006. Method 1680: Fecal Coliforms in Sewage Sludge (Biosolids) by Multiple-Tube Fermentation using Lauryl Tryptose Broth (LTB) and EC Medium. U.S. Environmental Protection Agency, Office of Water, Washington DC. EPA 821–R–06–012. Available at *http://www.epa.gov/waterscience/methods/*.

(71) USEPA. July 2006. Method 1681: Fecal Coliforms in Sewage Sludge (Biosolids) by Multiple-Tube Fermentation using A–1 Medium. U.S. Environmental Protection Agency, Office of Water, Washington DC. EPA 821–R–06–013. Available at *http://www.epa.gov/waterscience/methods/*.

(72) USEPA. July 2006. Method 1682: *Salmonella* in Sewage Sludge (Biosolids) by Modified Semisolid Rappaport-Vassiliadis (MSRV) Medium. U.S. Environmental Protection Agency, Office of Water, Washington DC. EPA 821–R–06–014. Available at *http://www.epa.gov/waterscience/methods/*.

(c) Under certain circumstances, the Regional Administrator or the Director in the Region or State where the discharge will occur may determine for a particular discharge that additional parameters or pollutants must be reported. Under such circumstances, additional test procedures for analysis of pollutants may be specified by the Regional Administrator, or the Director upon recommendation of the Alternate Test Procedure Program Coordinator, Washington, DC.

(d) Under certain circumstances, the Administrator may approve additional alternate test procedures for nationwide use, upon recommendation by the Alternate Test Procedure Program Coordinator, Washington, DC.

(e) Sample preservation procedures, container materials, and maximum allowable holding times for parameters are cited in Tables IA, IB, IC, ID, IE, IF, IG and IH are prescribed in Table II. Information in the table takes precedence over information in specific methods or elsewhere. Any person may apply for a variance from the prescribed preservation techniques, container materials, and maximum holding times applicable to samples taken from a specific discharge. Applications for variances may be made by letters to the Regional Administrator in the Region in which the discharge will occur. Sufficient data should be provided to assure such variance does not adversely affect the integrity of the sample. Such data will be forwarded by the Regional Administrator, to the Alternate Test Procedure Program Coordinator, Washington, DC, for technical review and recommendations for action on the variance application. Upon receipt of the recommendations from the Alternate Test Procedure Program Coordinator, the Regional Administrator may grant a variance applicable to the specific discharge to the applicant. A decision to approve or deny a variance will be made within 90 days of receipt of the application by the Regional Administrator.

TABLE II—REQUIRED CONTAINERS, PRESERVATION TECHNIQUES, AND HOLDING TIMES

Parameter No./name	Container [1]	Preservation [2,3]	Maximum holding time [4]
Table IA—Bacterial Tests:			
1–5. Coliform, total, fecal, and *E. coli*.	PA, G	Cool, <10 °C, 0.0008% $Na_2S_2O_3$ [5].	6 hours.[22,23]
6. Fecal streptococci	PA, G	Cool, <10 °C, 0.0008% $Na_2S_2O_3$ [5].	6 hours.[22]
7. Enterococci	PA, G	Cool, <10 °C, 0.0008% $Na_2S_2O_3$ [5].	6 hours.[22]
8. Salmonella	PA, G	Cool, <10 °C, 0.0008% $Na_2S_2O_3$ [5].	6 hours.[22]
Table IA—Aquatic Toxicity Tests:			
9–11. Toxicity, acute and chronic	P, FP, G	Cool, ≤6 °C [16]	36 hours.
Table IB—Inorganic Tests:			
1. Acidity	P, FP, G	Cool, ≤6 °C [18]	14 days.
2. Alkalinity	P, FP, G	Cool, ≤6 °C [18]	14 days.
4. Ammonia	P, FP, G	Cool, ≤6 °C [18], H_2SO_4 to pH<2	28 days.
9. Biochemical oxygen demand	P, FP, G	Cool, ≤6 °C [18]	48 hours.
10. Boron	P, FP, or Quartz	HNO_3 to pH<2	6 months.
11. Bromide	P, FP, G	None required	28 days.
14. Biochemical oxygen demand, carbonaceous.	P, FP G	Cool, ≤6 °C [18]	48 hours.
15. Chemical oxygen demand	P, FP, G	Cool, ≤6 °C [18], H_2SO_4 to pH<2	28 days.
16. Chloride	P, FP, G	None required	28 days.
17. Chlorine, total residual	P, G	None required	Analyze within 15 minutes.
21. Color	P, FP, G	Cool, ≤6 °C [18]	48 hours.
23–24. Cyanide, total or available (or CATC).	P, FP, G	Cool, ≤6 °C [18], NaOH to pH>12 [6], reducing agent [5].	14 days.
25. Fluoride	P	None required	28 days.
27. Hardness	P, FP, G	HNO_3 or H_2SO_4 to pH<2	6 months.
28. Hydrogen ion (pH)	P, FP, G	None required	Analyze within 15 minutes.
31, 43. Kjeldahl and organic N	P, FP, G	Cool, ≤6 °C [18], H_2SO_4 to pH<2	28 days.
Table IB—Metals: [7]			
18. Chromium VI	P, FP, G	Cool, ≤6 °C [18], pH = 9.3–9.7 [20]	28 days.
35. Mercury (CVAA)	P, FP, G	HNO_3 to pH<2	28 days.
35. Mercury (CVAFS)	FP, G; and FP-lined cap [17].	5 mL/L 12N HCl or 5 mL/L BrCl [17].	90 days.[17]
3, 5–8, 12, 13, 19, 20, 22, 26, 29, 30, 32–34, 36, 37, 45, 47, 51, 52, 58–60, 62, 63, 70–72, 74, 75. Metals, except boron, chromium VI, and mercury.	P, FP, G	HNO_3 to pH<2, or at least 24 hours prior to analysis [19].	6 months.
38. Nitrate	P, FP, G	Cool, ≤6 °C [18]	48 hours.
39. Nitrate-nitrite	P, FP, G	Cool, ≤6 °C [18], H_2SO_4 to pH<2	28 days.
40. Nitrite	P, FP, G	Cool, ≤6 °C [18]	48 hours.
41. Oil and grease	G	Cool to ≤6 °C [18], HCl or H_2SO_4 to pH<2.	28 days.
42. Organic Carbon	P, FP, G	Cool to ≤6 °C [18], HCl, H_2SO_4, or H_3PO_4 to pH<2.	28 days.
44. Orthophosphate	P, FP, G	Cool, ≤6 °C [18]	Filter within 15 minutes; Analyze within 48 hours.
46. Oxygen, Dissolved Probe	G, Bottle and top	None required	Analyze within 15 minutes.
47. Winkler	G, Bottle and top	Fix on site and store in dark	8 hours.
48. Phenols	G	Cool, ≤6 °C [18], H_2SO_4 to pH<2	28 days.
49. Phosphorous (elemental)	G	Cool, ≤6 °C [18]	48 hours.
50. Phosphorous, total	P, FP, G	Cool, ≤6 °C [18], H_2SO_4 to pH<2	28 days.
53. Residue, total	P, FP, G	Cool, ≤6 °C [18]	7 days.
54. Residue, Filterable	P, FP, G	Cool, ≤6 °C [18]	7 days.
55. Residue, Nonfilterable (TSS)	P, FP, G	Cool, ≤6 °C [18]	7 days.
56. Residue, Settleable	P, FP, G	Cool, ≤6 °C [18]	48 hours.

TABLE II—REQUIRED CONTAINERS, PRESERVATION TECHNIQUES, AND HOLDING TIMES—Continued

Parameter No./name	Container [1]	Preservation [2,3]	Maximum holding time [4]
57. Residue, Volatile	P, FP, G	Cool, ≤6 °C [18]	7 days.
61. Silica	P or Quartz	Cool, ≤6 °C [18]	28 days.
64. Specific conductance	P, FP, G	Cool, ≤6 °C [18]	28 days.
65. Sulfate	P, FP, G	Cool, ≤6 °C [18]	28 days.
66. Sulfide	P, FP, G	Cool, ≤6 °C [18], add zinc acetate plus sodium hydroxide to pH>9.	7 days.
67. Sulfite	P, FP, G	None required	Analyze within 15 minutes.
68. Surfactants	P, FP, G	Cool, ≤6 °C [18]	48 hours.
69. Temperature	P, FP, G	None required	Analyze.
73. Turbidity	P, FP, G	Cool, ≤6 °C [18]	48 hours.
Table IC—Organic Tests [8]			
13, 18–20, 22, 24–28, 34–37, 39–43, 45–47, 56, 76, 104, 105, 108–111, 113. Purgeable Halocarbons.	G, FP-lined septum	Cool, ≤6 °C [18], 0.008% $Na_2S_2O_3$ [5].	14 days.
6, 57, 106. Purgeable aromatic hydrocarbons.	G, FP-lined septum	Cool, ≤6 °C [18], 0.008% $Na_2S_2O_3$ [5], HCl to pH 2 [9].	14 days.[9]
3, 4. Acrolein and acrylonitrile	G, FP-lined septum	Cool, ≤6 °C [18], 0.008% $Na_2S_2O_3$ [5], pH to 4–5 [10].	14 days.[10]
23, 30, 44, 49, 53, 77, 80, 81, 98, 100, 112. Phenols [11].	G, FP-lined cap	Cool, ≤6 °C [18], 0.008% $Na_2S_2O_3$ [5].	7 days until extraction, 40 days after extraction.
7, 38. Benzidines [11,12]	G, FP-lined cap	Cool, ≤6 °C [18], 0.008% $Na_2S_2O_3$ [5].	7 days until extraction.[13]
14, 17, 48, 50–52. Phthalate esters [11].	G, FP-lined cap	Cool, ≤6 °C [18]	7 days until extraction, 40 days after extraction.
82–84. Nitrosamines [11,14]	G, FP-lined cap	Cool, ≤6 °C [18], store in dark, 0.008% $Na_2S_2O_3$ [5].	7 days until extraction, 40 days after extraction.
88–94. PCBs [11]	G, FP-lined cap	Cool, ≤6 °C [18]	1 year until extraction, 1 year after extraction.
54, 55, 75, 79. Nitroaromatics and isophorone [11].	G, FP-lined cap	Cool, ≤6 °C [18], store in dark, 0.008% $Na_2S_2O_3$ [5].	7 days until extraction, 40 days after extraction.
1, 2, 5, 8–12, 32, 33, 58, 59, 74, 78, 99, 101. Polynuclear aromatic hydrocarbons [11].	G, FP-lined cap	Cool, ≤6 °C [18], store in dark, 0.008% $Na_2S_2O_3$ [5].	7 days until extraction, 40 days after extraction.
15, 16, 21, 31, 87. Haloethers [11]	G, FP-lined cap	Cool, ≤6 °C [18], 0.008% $Na_2S_2O_3$ [5].	7 days until extraction, 40 days after extraction.
29, 35–37, 63–65, 107. Chlorinated hydrocarbons [11].	G, FP-lined cap	Cool, ≤6 °C [18]	7 days until extraction, 40 days after extraction.
60–62, 66–72, 85, 86, 95–97, 102, 103. CDDs/CDFs [11].			
Aqueous Samples: Field and Lab Preservation.	G	Cool, ≤6 °C [18], 0.008% $Na_2S_2O_3$ [5], pH<9.	1 year.
Solids and Mixed-Phase Samples: Field Preservation.	G	Cool, ≤6 °C [18]	7 days.
Tissue Samples: Field Preservation	G	Cool, ≤6 °C [18]	24 hours.
Solids, Mixed-Phase, and Tissue Samples: Lab Preservation.	G	Freeze, ≤ − 10 °C	1 year.
Table ID—Pesticides Tests:			
1–70. Pesticides [11]	G, FP-lined cap	Cool, ≤6 °C [18], pH 5–9 [15]	7 days until extraction, 40 days after extraction.
Table IE—Radiological Tests:			
1–5. Alpha, beta, and radium	P, FP, G	HNO_3 to pH<2	6 months.
Table IH—Bacterial Tests:			
1. *E. coli*	PA, G	Cool, <10 °C, 0.0008% $Na_2S_2O_3$ [5].	6 hours.[22]
2. Enterococci	PA, G	Cool, <10 °C, 0.0008% $Na_2S_2O_3$ [5].	6 hours.[22]
Table IH—Protozoan Tests:			
8. Cryptosporidium	LDPE; field filtration	0–8 °C	96 hours.[21]

TABLE II—REQUIRED CONTAINERS, PRESERVATION TECHNIQUES, AND HOLDING TIMES—Continued

Parameter No./name	Container [1]	Preservation [2,3]	Maximum holding time [4]
9. Giardia	LDPE; field filtration	0–8 °C	96 hours.[21]

[1] "P" is polyethylene; "FP" is fluoropolymer (polytetrafluoroethylene (PTFE; Teflon®), or other fluoropolymer, unless stated otherwise in this Table II; "G" is glass; "PA" is any plastic that is made of a sterlizable material (polypropylene or other autoclavable plastic); "LDPE" is low density polyethylene.

[2] Except where noted in this Table II and the method for the parameter, preserve each grab sample within 15 minutes of collection. For a composite sample collected with an automated sampler (e.g., using a 24-hour composite sampler; see 40 CFR 122.21(g)(7)(i) or 40 CFR part 403, Appendix E), refrigerate the sample at ≤ 6 °C during collection unless specified otherwise in this Table II or in the method(s). For a composite sample to be split into separate aliquots for preservation and/or analysis, maintain the sample at ≤ 6 °C, unless specified otherwise in this Table II or in the method(s), until collection, splitting, and preservation is completed. Add the preservative to the sample container prior to sample collection when the preservative will not compromise the integrity of a grab sample, a composite sample, or an aliquot split from a composite sample; otherwise, preserve the grab sample, composite sample, or aliquot split from a composite sample within 15 minutes of collection. If a composite measurement is required but a composite sample would compromise sample integrity, individual grab samples must be collected at prescribed time intervals (e.g., 4 samples over the course of a day, at 6-hour intervals). Grab samples must be analyzed separately and the concentrations averaged. Alternatively, grab samples may be collected in the field and composited in the laboratory if the compositing procedure produces results equivalent to results produced by arithmetic averaging of the results of analysis of individual grab samples. For examples of laboratory compositing procedures, see EPA Method 1664A (oil and grease) and the procedures at 40 CFR 141.34(f)(14)(iv) and (v) (volatile organics).

[3] When any sample is to be shipped by common carrier or sent via the U.S. Postal Service, it must comply with the Department of Transportation Hazardous Materials Regulations (49 CFR part 172). The person offering such material for transportation is responsible for ensuring such compliance. For the preservation requirements of Table II, the Office of Hazardous Materials, Materials Transportation Bureau, Department of Transportation has determined that the Hazardous Materials Regulations do not apply to the following materials: Hydrochloric acid (HCl) in water solutions at concentrations of 0.04% by weight or less (pH about 1.96 or greater); Nitric acid (HNO_3) in water solutions at concentrations of 0.15% by weight or less (pH about 1.62 or greater); Sulfuric acid (H_2SO_4) in water solutions at concentrations of 0.35% by weight or less (pH about 1.15 or greater); and Sodium hydroxide (NaOH) in water solutions at concentrations of 0.080% by weight or less (pH about 12.30 or less).

[4] Samples should be analyzed as soon as possible after collection. The times listed are the maximum times that samples may be held before the start of analysis and still be considered valid (e.g., samples analyzed for fecal coliforms may be held up to 6 hours prior to commencing analysis). Samples may be held for longer periods only if the permittee or monitoring laboratory has data on file to show that, for the specific types of samples under study, the analytes are stable for the longer time, and has received a variance from the Regional Administrator under § 136.3(e). For a grab sample, the holding time begins at the time of collection. For a composite sample collected with an automated sampler (e.g., using a 24-hour composite sampler; see 40 CFR 122.21(g)(7)(i) or 40 CFR part 403, Appendix E), the holding time begins at the time of the end of collection of the composite sample. For a set of grab samples composited in the field or laboratory, the holding time begins at the time of collection of the last grab sample in the set. Some samples may not be stable for the maximum time period given in the table. A permittee or monitoring laboratory is obligated to hold the sample for a shorter time if it knows that a shorter time is necessary to maintain sample stability. See § 136.3(e) for details. The date and time of collection of an individual grab sample is the date and time at which the sample is collected. For a set of grab samples to be composited, and that are all collected on the same calendar date, the date of collection is the date on which the samples are collected. For a set of grab samples to be composited, and that are collected across two calendar dates, the date of collection is the dates of the two days; e.g., November 14–15. For a composite sample collected automatically on a given date, the date of collection is the date on which the sample is collected. For a composite sample collected automatically, and that is collected across two calendar dates, the date of collection is the dates of the two days; e.g., November 14–15.

[5] Add a reducing agent only if an oxidant (e.g., chlorine) is present. Reducing agents shown to be effective are sodium thiosulfate ($Na_2S_2O_3$), ascorbic acid, sodium arsenite ($NaAsO_2$), or sodium borohydride ($NaBH_4$). However, some of these agents have been shown to produce a positive or negative cyanide bias, depending on other substances in the sample and the analytical method used. Therefore, do not add an excess of reducing agent. Methods recommending ascorbic acid (e.g., EPA Method 335.4) specify adding ascorbic acid crystals, 0.1–0.6 g, until a drop of sample produces no color on potassium iodide (KI) starch paper, then adding 0.06 g (60 mg) for each liter of sample volume. If $NaBH_4$ or $NaAsO_2$ is used, 25 mg/L $NaBH_4$ or 100 mg/L $NaAsO_2$ will reduce more than 50 mg/L of chlorine (see method "Kelada-01" and/or Standard Method 4500–CN^- for more information). After adding reducing agent, test the sample using KI paper, a test strip (e.g. for chlorine, SenSafe™ Total Chlorine Water Check 480010) moistened with acetate buffer solution (see Standard Method 4500–Cl.C.3e), or a chlorine/oxidant test method (e.g., EPA Method 330.4 or 330.5), to make sure all oxidant is removed. If oxidant remains, add more reducing agent. Whatever agent is used, it should be tested to assure that cyanide results are not affected adversely.

[6] Sample collection and preservation: Collect a volume of sample appropriate to the analytical method in a bottle of the material specified. If the sample can be analyzed within 48 hours and sulfide is not present, adjust the pH to > 12 with sodium hydroxide solution (e.g., 5% w/v), refrigerate as specified, and analyze within 48 hours. Otherwise, to extend the holding time to 14 days and mitigate interferences, treat the sample immediately using any or all of the following techniques, as necessary, followed by adjustment of the sample pH to > 12 and refrigeration as specified. There may be interferences that are not mitigated by approved procedures. Any procedure for removal or suppression of an interference may be employed, provided the laboratory demonstrates that it more accurately measures cyanide. Particulate cyanide (e.g., ferric ferrocyanide) or a strong cyanide complex (e.g., cobalt cyanide) are more accurately measured if the laboratory holds the sample at room temperature and pH > 12 for a minimum of 4 hours prior to analysis, and performs UV digestion or dissolution under alkaline (pH=12) conditions, if necessary.

(1) Sulfur: To remove elemental sulfur (S_8), filter the sample immediately. If the filtration time will exceed 15 minutes, use a larger filter or a method that requires a smaller sample volume (e.g., EPA Method 335.4 or Lachat Method 01). Adjust the pH of the filtrate to > 12 with NaOH, refrigerate the filter and filtrate, and ship or transport to the laboratory. In the laboratory, extract the filter with 100 mL of 5% NaOH solution for a minimum of 2 hours. Filter the extract and discard the solids. Combine the 5% NaOH-extracted filtrate with the initial filtrate, lower the pH to approximately 12 with concentrated hydrochloric or sulfuric acid, and analyze the combined filtrate. Because the detection limit for cyanide will be increased by dilution by the filtrate from the solids, test the sample with and without the solids procedure if a low detection limit for cyanide is necessary. Do not use the solids procedure if a higher cyanide concentration is obtained without it. Alternatively, analyze the filtrates from the sample and the solids separately, add the amounts determined (in µg or mg), and divide by the original sample volume to obtain the cyanide concentration.

(2) Sulfide: If the sample contains sulfide as determined by lead acetate paper, or if sulfide is known or suspected to be present, immediately conduct one of the volatilization treatments or the precipitation treatment as follows: Volatilization—Headspace expelling. In a fume hood or well-ventilated area, transfer 0.75 liter of sample to a 4.4 L collapsible container (e.g., Cubitainer™). Acidify with concentrated hydrochloric acid to pH < 2. Cap the container and shake vigorously for 30 seconds. Remove the cap and expel the headspace into the fume hood or open area by collapsing the container without expelling the sample. Refill the headspace by expanding the container. Repeat expelling a total of five headspace volumes. Adjust the pH to > 12, refrigerate, and ship or transport to the laboratory. Scaling to a smaller or larger sample volume must maintain the air to sample volume ratio. A larger volume of air will result in too great a loss of cyanide (> 10%). Dynamic stripping: In a fume hood or well-ventilated area, transfer 0.75 liter of sample to a container of the material specified and acidify with concentrated hydrochloric acid to pH < 2. Using a calibrated air sampling pump or flowmeter, purge the acidified sample into the fume hood or open area through a fritted glass aerator at a flow rate of 2.25 L/min for 4 minutes. Adjust the pH to > 12, refrigerate, and ship or transport to the laboratory. Scaling to a smaller or larger sample volume must maintain the air to sample volume ratio. A larger volume of air will result in too great a loss of cyanide (> 10%). Precipitation: If the sample contains particulate matter that would be removed by filtration, filter the sample prior to treatment to assure that cyanide associated with the particulate matter is included in the measurement. Ship or transport the filter to the laboratory. In the laboratory, extract the filter with 100 mL of 5% NaOH solution for a minimum of 2 hours. Filter the extract and discard the solids. Combine the 5% NaOH-extracted filtrate with the initial filtrate, lower the pH to approximately 12 with concentrated hydrochloric or sulfuric acid, and analyze the combined filtrate. Because the detection limit for cyanide will be increased by dilution by the filtrate from the solids, test the sample with and without the solids procedure if a low detection limit for cyanide is necessary. Do not use the solids procedure if a higher cyanide concentration is obtained without it. Alternatively, analyze the filtrates from the sample and the solids separately, add the amounts determined (in µg or mg), and divide by the original sample volume to obtain the cyanide concentration. For removal of sulfide by precipitation, raise the pH of the sample to > 12 with NaOH solution, then add approximately 1 mg of powdered cadmium chloride for each mL of sample. For example, add approximately 500 mg to a 500-mL sample. Cap and shake the container to mix. Allow the precipitate to settle and test the sample with lead acetate paper. If necessary, add cadmium chloride but avoid adding an excess. Finally, filter through 0.45 micron filter. Cool the sample as specified and ship or transport the filtrate and filter to the laboratory. In the laboratory, extract the filter with 100 mL of 5% NaOH solution for a minimum of 2 hours. Filter the extract and discard the solids. Combine the 5% NaOH-extracted filtrate with the initial filtrate, lower the pH to approximately 12 with concentrated hydrochloric or sulfuric acid, and analyze the combined filtrate. Because the detection limit for cyanide will be increased by dilution by the filtrate from the solids, test the sample with and without the solids procedure if a low detection limit for cyanide is necessary. Do not use the solids procedure if a higher cyanide concentration is obtained without it. Alternatively, analyze the filtrates from the sample and the solids separately, add the amounts determined (in µg or mg), and divide by the original sample volume to obtain the cyanide concentration. If a ligand-exchange method is used (e.g., ASTM D6888), it may be necessary to increase the ligand-exchange reagent to offset any excess of cadmium chloride.

(3) Sulfite, thiosulfate, or thiocyanate: If sulfite, thiosulfate, or thiocyanate is known or suspected to be present, use UV digestion with a glass coil (Method Kelada-01) or ligand exchange (Method OIA–1677) to preclude cyanide loss or positive interference.

(4) Aldehyde: If formaldehyde, acetaldehyde, or another water-soluble aldehyde is known or suspected to be present, treat the sample with 20 mL of 3.5% ethylenediamine solution per liter of sample.

(5) Carbonate: Carbonate interference is evidenced by noticeable effervescence upon acidification in the distillation flask, a reduction in the pH of the absorber solution, and incomplete cyanide spike recovery. When significant carbonate is present, adjust the pH to ≥12 using calcium hydroxide instead of sodium hydroxide. Allow the precipitate to settle and decant or filter the sample prior to analysis (also see Standard Method 4500–CN.B.3.d).

(6) Chlorine, hypochlorite, or other oxidant: Treat a sample known or suspected to contain chlorine, hypochlorite, or other oxidant as directed in footnote 5.

[7] For dissolved metals, filter grab samples within 15 minutes of collection and before adding preservatives. For a composite sample collected with an automated sampler (e.g., using a 24-hour composite sampler; see 40 CFR 122.21(g)(7)(i) or 40 CFR part 403, appendix E), filter the sample within 15 minutes after completion of collection and before adding preservatives. If it is known or suspected that dissolved sample integrity will be compromised during collection of a composite sample collected automatically over time (e.g., by interchange of a metal between dissolved and suspended forms), collect and filter grab samples to be composited (footnote 2) in place of a composite sample collected automatically.

[8] Guidance applies to samples to be analyzed by GC, LC, or GC/MS for specific compounds.

[9] If the sample is not adjusted to pH 2, then the sample must be analyzed within seven days of sampling.

[10] The pH adjustment is not required if acrolein will not be measured. Samples for acrolein receiving no pH adjustment must be analyzed within 3 days of sampling.

[11] When the extractable analytes of concern fall within a single chemical category, the specified preservative and maximum holding times should be observed for optimum safeguard of sample integrity (*i.e.*, use all necessary preservatives and hold for the shortest time listed). When the analytes of concern fall within two or more chemical categories, the sample may be preserved by cooling to ≤6 °C, reducing residual chlorine with 0.008% sodium thiosulfate, storing in the dark, and adjusting the pH to 6–9; samples preserved in this manner may be held for seven days before extraction and for forty days after extraction. Exceptions to this optional preservation and holding time procedure are noted in footnote 5 (regarding the requirement for thiosulfate reduction), and footnotes 12, 13 (regarding the analysis of benzidine).

[12] If 1,2-diphenylhydrazine is likely to be present, adjust the pH of the sample to 4.0 ± 0.2 to prevent rearrangement to benzidine.

[13] Extracts may be stored up to 30 days at < 0 °C.

[14] For the analysis of diphenylnitrosamine, add 0.008% $Na_2S_2O_3$ and adjust pH to 7–10 with NaOH within 24 hours of sampling.

[15] The pH adjustment may be performed upon receipt at the laboratory and may be omitted if the samples are extracted within 72 hours of collection. For the analysis of aldrin, add 0.008% $Na_2S_2O_3$.

[16] Sufficient ice should be placed with the samples in the shipping container to ensure that ice is still present when the samples arrive at the laboratory. However, even if ice is present when the samples arrive, it is necessary to immediately measure the temperature of the samples and confirm that the preservation temperature maximum has not been exceeded. In the isolated cases where it can be documented that this holding temperature cannot be met, the permittee can be given the option of on-site testing or can request a variance. The request for a variance should include supportive data which show that the toxicity of the effluent samples is not reduced because of the increased holding temperature.

[17] Samples collected for the determination of trace level mercury (<100 ng/L) using EPA Method 1631 must be collected in tightly-capped fluoropolymer or glass bottles and preserved with BrCl or HCl solution within 48 hours of sample collection. The time to preservation may be extended to 28 days if a sample is oxidized in the sample bottle. A sample collected for dissolved trace level mercury should be filtered in the laboratory within 24 hours of the time of collection. However, if circumstances preclude overnight shipment, the sample should be filtered in a designated clean area in the field in accordance with procedures given in Method 1669. If sample integrity will not be maintained by shipment to and filtration in the laboratory, the sample must be filtered in a designated clean area in the field within the time period necessary to maintain sample integrity. A sample that has been collected for determination of total or dissolved trace level mercury must be analyzed within 90 days of sample collection.

[18] Aqueous samples must be preserved at ≤6 °C, and should not be frozen unless data demonstrating that sample freezing does not adversely impact sample integrity is maintained on file and accepted as valid by the regulatory authority. Also, for purposes of NPDES monitoring, the specification of "≤ °C" is used in place of the "4 °C" and "< 4 °C" sample temperature requirements listed in some methods. It is not necessary to measure the sample temperature to three significant figures (1/100th of 1 degree); rather, three significant figures are specified so that rounding down to 6 °C may not be used to meet the ≤6 °C requirement. The preservation temperature does not apply to samples that are analyzed immediately (less than 15 minutes).

[19] An aqueous sample may be collected and shipped without acid preservation. However, acid must be added at least 24 hours before analysis to dissolve any metals that adsorb to the container walls. If the sample must be analyzed within 24 hours of collection, add the acid immediately (see footnote 2). Soil and sediment samples do not need to be preserved with acid. The allowances in this footnote supersede the preservation and holding time requirements in the approved metals methods.

[20] To achieve the 28-day holding time, use the ammonium sulfate buffer solution specified in EPA Method 218.6. The allowance in this footnote supersedes preservation and holding time requirements in the approved hexavalent chromium methods, unless this supersession would compromise the measurement, in which case requirements in the method must be followed.

[21] Holding time is calculated from time of sample collection to elution for samples shipped to the laboratory in bulk and calculated from the time of sample filtration to elution for samples filtered in the field.

[22] Samples analysis should begin immediately, preferably within 2 hours of collection. The maximum transport time to the laboratory is 6 hours, and samples should be processed within 2 hours of receipt at the laboratory.

[23] For fecal coliform samples for sewage sludge (biosolids) only, the holding time is extended to 24 hours for the following sample types using either EPA Method 1680 (LTB–EC) or 1681 (A–1): Class A composted, Class B aerobically digested, and Class B anaerobically digested.

[38 FR 28758, Oct. 16, 1973]

EDITORIAL NOTE: For FEDERAL REGISTER citations affecting §136.3, see the List of CFR Sections Affected, which appears in the Finding Aids section of the printed volume and at www.fdsys.gov.

§ 136.4 Application for alternate test procedures.

(a) Any person may apply to the Regional Administrator in the Region where the discharge occurs for approval of an alternative test procedure.

(b) When the discharge for which an alternative test procedure is proposed occurs within a State having a permit program approved pursuant to section 402 of the Act, the applicant shall submit his application to the Regional Administrator through the Director of the State agency having responsibility for issuance of NPDES permits within such State.

(c) Unless and until printed application forms are made available, an application for an alternate test procedure may be made by letter in triplicate. Any application for an alternate test procedure under this paragraph (c) shall:

(1) Provide the name and address of the responsible person or firm making the discharge (if not the applicant) and the applicable ID number of the existing or pending permit, issuing agency, and type of permit for which the alternate test procedure is requested, and the discharge serial number.

(2) Identify the pollutant or parameter for which approval of an alternate testing procedure is being requested.

(3) Provide justification for using testing procedures other than those specified in Table I.

(4) Provide a detailed description of the proposed alternate test procedure, together with references to published studies of the applicability of the alternate test procedure to the effluents in question.

(d) An application for approval of an alternate test procedure for nationwide use may be made by letter in triplicate to the Alternate Test Procedure Program Coordinator, Office of Science and Technology (4303), Office of Water, U.S. Environmental Protection Agency, 1200 Pennsylvania Ave., NW., Washington, DC 20460. Any application for an alternate test procedure under this paragraph (d) shall:

(1) Provide the name and address of the responsible person or firm making the application.

(2) Identify the pollutant(s) or parameter(s) for which nationwide approval of an alternate testing procedure is being requested.

(3) Provide a detailed description of the proposed alternate procedure, together with references to published or other studies confirming the general applicability of the alternate test procedure to the pollutant(s) or parameter(s) in waste water discharges from representative and specified industrial or other categories.

(4) Provide comparability data for the performance of the proposed alternate test procedure compared to the performance of the approved test procedures.

[38 FR 28760, Oct. 16, 1973, as amended at 41 FR 52785, Dec. 1, 1976; 62 FR 30763, June 5, 1997; 72 FR 11239, Mar. 12, 2007]

§ 136.5 Approval of alternate test procedures.

(a) The Regional Administrator of the region in which the discharge will occur has final responsibility for approval of any alternate test procedure proposed by the responsible person or firm making the discharge.

(b) Within thirty days of receipt of an application, the Director will forward such application proposed by the responsible person or firm making the discharge, together with his recommendations, to the Regional Administrator. Where the Director recommends rejection of the application for scientific and technical reasons which he provides, the Regional Administrator shall deny the application and shall forward this decision to the Director of the State Permit Program and to the Alternate Test Procedure Program Coordinator, Office of Science and Technology (4303), Office of Water, U.S. Environmental Protection Agency, 1200 Pennsylvania Ave., NW., Washington, DC 20460.

(c) Before approving any application for an alternate test procedure proposed by the responsible person or firm making the discharge, the Regional Administrator shall forward a copy of the application to the Alternate Test Procedure Program Coordinator, Office of Science and Technology (4303), Office of Water, U.S. Environmental Protection Agency, 1200 Pennsylvania Ave., NW., Washington, DC 20460.

(d) Within ninety days of receipt by the Regional Administrator of an application for an alternate test procedure, proposed by the responsible person or firm making the discharge, the Regional Administrator shall notify the applicant and the appropriate State agency of approval or rejection, or shall specify the additional information which is required to determine whether to approve the proposed test procedure. Prior to the expiration of such ninety day period, a recommendation providing the scientific and other technical basis for acceptance or rejection will be forwarded to the Regional Administrator by the Alternate Test Procedure Program Coordinator, Washington, DC. A copy of all approval and rejection notifications will be forwarded to the Alternate Test Procedure Program Coordinator, Office of Science and Technology (4303), Office of Water, U.S. Environmental Protection Agency, 1200 Pennsylvania Ave., NW., Washington, DC 20460, for the purposes of national coordination.

(e) *Approval for nationwide use.* (1) As expeditiously as is practicable after receipt by the Alternate Test Procedure Program Coordinator, Washington, DC, of an application for an alternate test procedure for nationwide use, the Alternate Test Procedure Program Coordinator, Washington, DC, shall notify the applicant in writing whether the application is complete. If the application is incomplete, the applicant shall be informed of the information necessary to make the application complete.

(2) As expeditiously as is practicable after receipt of a complete package, the Alternate Test Procedure Program Coordinator shall perform any analysis necessary to determine whether the alternate test procedure satisfies the applicable requirements of this part, and the Alternate Test Procedure Program Coordinator shall recommend to the Administrator that he/she approve or reject the application and shall also notify the application of the recommendation.

(3) As expeditiously as practicable, an alternate method determined by the Administrator to satisfy the applicable requirements of this part shall be proposed by EPA for incorporation in subsection 136.3 of 40 CFR part 136. EPA shall make available for review all the factual bases for its proposal, including any performance data submitted by the applicant and any available EPA analysis of those data.

(4) Following a period of public comment, EPA shall, as expeditiously as practicable, publish in the FEDERAL REGISTER a final decision to approve or reject the alternate method.

[38 FR 28760, Oct. 16, 1973, as amended at 41 FR 52785, Dec. 1, 1976; 55 FR 33440, Aug. 15, 1990; 62 FR 30763, June 5, 1997; 72 FR 11239, Mar. 12, 2007]

§ 136.6 Method modifications and analytical requirements.

(a) *Definitions of terms used in this section.*

(1) *Analyst* means the person or laboratory using a test procedure (analytical method) in this Part.

(2) *Chemistry of the method* means the reagents and reactions used in a test

procedure that allow determination of the analyte(s) of interest in an environmental sample.

(3) *Determinative technique* means the way in which an analyte is identified and quantified (e.g., colorimetry, mass spectrometry).

(4) *Equivalent Performance* means that the modified method produces results that meet the QC acceptance criteria of the approved method at this part.

(5) *Method-defined analyte* means an analyte defined solely by the method used to determine the analyte. Such an analyte may be a physical parameter, a parameter that is not a specific chemical, or a parameter that may be comprised of a number of substances. Examples of such analytes include temperature, oil and grease, total suspended solids, total phenolics, turbidity, chemical oxygen demand, and biochemical oxygen demand.

(6) *QC* means ''quality control.''

(b) *Method modifications*—(1) *Allowable changes.* Except as set forth in paragraph (b)(3) of this section, an analyst may modify an approved test procedure (analytical method) provided that the chemistry of the method or the determinative technique is not changed, and provided that the requirements of paragraph (b)(2) of this section are met.

(i) Potentially acceptable modifications regardless of current method performance include changes between automated and manual discrete instrumentation; changes in the calibration range (provided that the modified range covers any relevant regulatory limit); changes in equipment such as using similar equipment from a vendor other than that mentioned in the method (e.g., a purge-and-trap device from OIA rather than Tekmar), changes in equipment operating parameters such as changing the monitoring wavelength of a colorimeter or modifying the temperature program for a specific GC column; changes to chromatographic columns (treated in greater detail in paragraph (d) of this section); and increases in purge-and-trap sample volumes (provided specifications in paragraph (e) of this section are met). The changes are only allowed provided that all the requirements of paragraph (b)(2) of this section are met.

(ii) If the characteristics of a wastewater matrix prevent efficient recovery of organic pollutants and prevent the method from meeting QC requirements, the analyst may attempt to resolve the issue by using salts as specified in *Guidance on Evaluation, Resolution, and Documentation of Analytical Problems Associated with Compliance Monitoring* (EPA 821–B–93–001, June 1993), provided that such salts do not react with or introduce the target pollutant into the sample (as evidenced by the analysis of method blanks, laboratory control samples, and spiked samples that also contain such salts) and that all requirements of paragraph (b)(2) of this section are met. Chlorinated samples must be dechlorinated prior to the addition of such salts.

(iii) If the characteristics of a wastewater matrix result in poor sample dispersion or reagent deposition on equipment and prevents the analyst from meeting QC requirements, the analysts may attempt to resolve the issue by adding an inert surfactant (*i.e.* a surfactant that will not affect the chemistry of the method), which may include Brij-35 or sodium dodecyl sulfate (SDS), provided that such surfactant does not react with or introduce the target pollutant into the sample (as evidenced by the analysis of method blanks, laboratory control samples, and spiked samples that also contain such surfactant) and that all requirements of paragraph (b)(2) of this section are met. Chlorinated samples must be dechlorinated prior to the addition of such surfactant.

(2) *Requirements.* A modified method must produce equivalent performance to the approved methods for the analyte(s) of interest, and the equivalent performance must be documented.

(i) *Requirements for establishing equivalent performance*

(A) If the approved method contains QC tests and QC acceptance criteria, the modified method must use these QC tests and the modified method must meet the QC acceptance criteria. The Analyst may only rely on QC tests and QC acceptance criteria in a method if it includes wastewater matrix QC tests and QC acceptance criteria (e.g., as matrix spikes) and both initial (start-up) and ongoing QC tests and QC acceptance criteria.

(B) If the approved method does not contain QC tests and QC acceptance criteria, or if the QC tests and QC acceptance criteria in the method do not meet the requirements of paragraph (b)(2)(i)(A) of this section, the analyst must employ QC tests specified in *Protocol for EPA Approval of Alternate Test Procedures for Organic and Inorganic Analytes in Wastewater and Drinking Water* (EPA–821–B–98–002, March 1999) and meet the QC provisions specified therein. In addition, the Analyst must perform on-going QC tests, including assessment of performance of the modified method on the sample matrix (e.g., analysis of a matrix spike/matrix spike duplicate pair for every twenty samples of a discharge analyzed), and analysis of an ongoing precision and recovery sample and a blank with each batch of 20 or fewer samples.

(C) Calibration must be performed using the modified method and the modified method must be tested with every wastewater matrix to which it will be applied (up to nine distinct matrices; as described in the ATP Protocol, after validation in nine distinct matrices, the method may be applied to all wastewater matrices), in addition to any and all reagent water tests. If the performance in the wastewater matrix or reagent water does not meet the QC acceptance criteria the method modification may not be used.

(D) Analysts must test representative effluents with the modified method, and demonstrate that the results are equivalent or superior to results with the unmodified method.

(ii) *Requirements for documentation.* The modified method must be documented in a method write-up or an addendum that describes the modification(s) to the approved method. The write-up or addendum must include a reference number (e.g., method number), revision number, and revision date so that it may be referenced accurately. In addition, the organization that uses the modified method must document the results of QC tests and keep these records, along with a copy of the method write-up or addendum, for review by an auditor.

(3) *Restrictions.* An analyst may not modify an approved analytical method for a method-defined analyte. In addition, an analyst may not modify an approved method if the modification would result in measurement of a different form or species of an analyte (e.g., a change to a metals digestion or total cyanide distillation). An analyst may also may not modify any sample preservation and/or holding time requirements of an approved method.

(c) *Analytical requirements for multi-analyte methods (Target Analytes).* For the purpose of NPDES reporting, the discharger or permittee must meet QC requirements only for the analyte(s) being measured and reported under the NPDES permit.

(d) The following modifications to approved methods are authorized in the circumstances described below:

(1) *Capillary column.* Use of a capillary (open tubular) GC column rather than a packed column is allowed with EPA Methods 601–613, 624, 625, and 1624B in Appendix A to this part, provided that all QC tests for the approved method are performed and all QC acceptance criteria are met. When changing from a packed column to a capillary column, retention times will change. Analysts are not required to meet retention time specified in the approved method when this change is made. Instead, analysts must generate new retention time tables with capillary columns to be kept on file along with other startup test and ongoing QC data, for review by auditors.

(2) *Increased sample volume in purge and trap methodology.* Use of increased sample volumes, up to a maximum of 25 mL, is allowed for an approved method, provided that the height of the water column in the purge vessel is at least 5 cm. The analyst should also use one or more surrogate analytes that are chemically similar to the analytes of interest in order to demonstrate that the increased sample volume does not adversely affect the analytical results.

[72 FR 11239, Mar. 12, 2007]

APPENDIX A TO PART 136—METHODS FOR ORGANIC CHEMICAL ANALYSIS OF MUNICIPAL AND INDUSTRIAL WASTEWATER

METHOD 601—PURGEABLE HALOCARBONS

1. Scope and Application

1.1 This method covers the determination of 29 purgeable halocarbons.

The following parameters may be determined by this method:

Parameter	STORET No.	CAS No.
Bromodichloromethane	32101	75–27–4
Bromoform	32104	75–25–2
Bromomethane	34413	74–83–9
Carbon tetrachloride	32102	56–23–5
Chlorobenzene	34301	108–90–7
Chloroethane	34311	75–00–3
2-Chloroethylvinyl ether	34576	100–75–8
Chloroform	32106	67–66–3
Chloromethane	34418	74–87–3
Dibromochloromethane	32105	124–48–1
1,2-Dichlorobenzene	34536	95–50–1
1,3-Dichlorobenzene	34566	541–73–1
1,4-Dichlorobenzene	34571	106–46–7
Dichlorodifluoromethane	34668	75–71–8
1,1-Dichloroethane	34496	75–34–3
1,2-Dichloroethane	34531	107–06–2
1,1-Dichloroethane	34501	75–35–4
trans-1,2-Dichloroethene	34546	156–60–5
1,2-Dichloropropane	34541	78–87–5
cis-1,3-Dichloropropene	34704	10061–01–5
trans-1,3-Dichloropropene	34699	10061–02–6
Methylene chloride	34423	75–09–2
1,1,2,2-Tetrachloroethane	34516	79–34–5
Tetrachloroethene	34475	127–18–4
1,1,1-Trichloroethane	34506	71–55–6
1,1,2-Trichloroethane	34511	79–00–5
Tetrachloroethene	39180	79–01–6
Trichlorofluoromethane	34488	75–69–4
Vinyl chloride	39715	75–01–4

1.2 This is a purge and trap gas chromatographic (GC) method applicable to the determination of the compounds listed above in municipal and industrial discharges as provided under 40 CFR 136.1. When this method is used to analyze unfamiliar samples for any or all of the compounds above, compound identifications should be supported by at least one additional qualitative technique. This method describes analytical conditions for a second gas chromatographic column that can be used to confirm measurements made with the primary column. Method 624 provides gas chromatograph/mass spectrometer (GC/MS) conditions appropriate for the qualitative and quantitative confirmation of results for most of the parameters listed above.

1.3 The method detection limit (MDL, defined in Section 12.1)[1] for each parameter is listed in Table 1. The MDL for a specific wastewater may differ from those listed, depending upon the nature of interferences in the sample matrix.

1.4 Any modification of this method, beyond those expressly permitted, shall be considered as a major modification subject to application and approval of alternate test procedures under 40 CFR 136.4 and 136.5.

1.5 This method is restricted to use by or under the supervision of analysts experienced in the operation of a purge and trap system and a gas chromatograph and in the interpretation of gas chromatograms. Each analyst must demonstrate the ability to generate acceptable results with this method using the procedure described in Section 8.2.

2. Summary of Method

2.1 An inert gas is bubbled through a 5-mL water sample contained in a specially-designed purging chamber at ambient temperature. The halocarbons are efficiently transferred from the aqueous phase to the vapor phase. The vapor is swept through a sorbent trap where the halocarbons are trapped. After purging is completed, the trap is heated and backflushed with the inert gas to desorb the halocarbons onto a gas chromatographic column. The gas chromatograph is temperature programmed to separate the halocarbons which are then detected with a halide-specific detector.[2,3]

2.2 The method provides an optional gas chromatographic column that may be helpful in resolving the compounds of interest from interferences that may occur.

3. Interferences

3.1 Impurities in the purge gas and organic compounds outgassing from the plumbing ahead of the trap account for the majority of contamination problems. The analytical system must be demonstrated to be free from contamination under the conditions of the analysis by running laboratory reagent blanks as described in Section 8.1.3. The use of non-Teflon plastic tubing, non-Teflon thread sealants, or flow controllers with rubber components in the purge and trap system should be avoided.

3.2 Samples can be contaminated by diffusion of volatile organics (particularly fluorocarbons and methylene chloride) through the septum seal ilto the sample during shipment and storage. A field reagent blank prepared from reagent water and carried through the sampling and handling protocol can serve as a check on such contamination.

3.3 Contamination by carry-over can occur whenever high level and low level samples are sequentially analyzed. To reduce carry-over, the purging device and sample syringe must be rinsed with reagent water between sample analyses. Whenever an unusually concentrated sample is encountered, it should be followed by an analysis of reagent water to check for cross contamination. For samples containing large amounts of water-soluble materials, suspended solids, high boiling compounds or high organohalide levels, it may be necessary to wash out the purging device with a detergent solution, rinse it with distilled water, and then dry it in a 105°C oven between analyses. The trap and other parts of the system are also subject to contamination; therefore, frequent bakeout and purging of the entire system may be required.

4. Safety

4.1 The toxicity or carcinogenicity of each reagent used in this method has not been precisely defined; however, each chemical compound should be treated as a potential health hazard. From this viewpoint, exposure to these chemicals must be reduced to the lowest possible level by whatever means available. The laboratory is responsible for maintaining a current awareness file of OSHA regulations regarding the safe handling of the chemicals specified in this method. A reference file of material data handling sheets should also be made available to all personnel involved in the chemical analysis. Additional references to laboratory safety are available and have been identified[4,6] for the information of the analyst.

4.2 The following parameters covered by this method have been tentatively classified as known or suspected, human or mammalian carcinogens: carbon tetrachloride, chloroform, 1,4-dichlorobenzene, and vinyl chloride. Primary standards of these toxic compounds should be prepared in a hood. A NIOSH/MESA approved toxic gas respirator should be worn when the analyst handles high concentrations of these toxic compounds.

5. Apparatus and Materials

5.1 Sampling equipment, for discrete sampling.

5.1.1 Vial—25-mL capacity or larger, equipped with a screw cap with a hole in the center (Pierce #13075 or equivalent). Detergent wash, rinse with tap and distilled water, and dry at 105 °C before use.

5.1.2 Septum—Teflon-faced silicone (Pierce #12722 or equivalent). Detergent wash, rinse with tap and distilled water, and dry at 105 °C for 1 h before use.

5.2 Purge and trap system—The purge and trap system consists of three separate pieces of equipment: a purging device, trap, and desorber. Several complete systems are now commercially available.

5.2.1 The purging device must be designed to accept 5-mL samples with a water column at least 3 cm deep. The gaseous head space between the water column and the trap must have a total volume of less than 15 mL. The purge gas must pass through the water column as finely divided bubbles with a diameter of less than 3 mm at the origin. The purge gas must be introduced no more than 5 mm from the base of the water column. The purging device illustrated in Figure 1 meets these design criteria.

5.2.2 The trap must be at least 25 cm long and have an inside diameter of at least 0.105 in. The trap must be packed to contain the following minimum lengths of adsorbents: 1.0 cm of methyl silicone coated packing (Section 6.3.3), 7.7 cm of 2,6-diphenylene oxide polymer (Section 6.3.2), 7.7 cm of silica gel (Section 6.3.4), 7.7 cm of coconut charcoal (Section 6.3.1). If it is not necessary to analyze for dichlorodifluoromethane, the charcoal can be eliminated, and the polymer section lengthened to 15 cm. The minimum specifications for the trap are illustrated in Figure 2.

5.2.3 The desorber must be capable of rapidly heating the trap to 180 °C. The polymer section of the trap should not be heated higher than 180 °C and the remaining sections should not exceed 200 °C. The desorber illustrated in Figure 2 meets these design criteria.

5.2.4 The purge and trap system may be assembled as a separate unit or be coupled to a gas chromatograph as illustrated in Figures 3 and 4.

5.3 Gas chromatograph—An analytical system complete with a temperature programmable gas chromatograph suitable for on-column injection and all required accessories including syringes, analytical columns, gases, detector, and strip-chart recorder. A data system is recommended for measuring peak areas.

5.3.1 Column 1—8 ft long × 0.1 in. ID stainless steel or glass, packed with 1% SP–1000 on Carbopack B (60/80 mesh) or equivalent. This column was used to develop the method performance statements in Section 12. Guidelines for the use of alternate column packings are provided in Section 10.1.

5.3.2 Column 2—6 ft long × 0.1 in. ID stainless steel or glass, packed with chemically bonded n-octane on Porasil-C (100/120 mesh) or equivalent.

5.3.3 Detector—Electrolytic conductivity or microcoulometric detector. These types of detectors have proven effective in the analysis of wastewaters for the parameters listed in the scope (Section 1.1). The electrolytic conductivity detector was used to develop the method performance statements in Section 12. Guidelines for the use of alternate detectors are provided in Section 10.1.

5.4 Syringes—5-mL glass hypodermic with Luerlok tip (two each), if applicable to the purging device.

5.5 Micro syringes—25-µL, 0.006 in. ID needle.

5.6 Syringe valve—2-way, with Luer ends (three each).

5.7 Syringe—5-mL, gas-tight with shut-off valve.

5.8 Bottle—15-mL, screw-cap, with Teflon cap liner.

5.9 Balance—Analytical, capable of accurately weighing 0.0001 g.

6. Reagents

6.1 Reagent water—Reagent water is defined as a water in which an interferent is not observed at the MDL of the parameters of interest.

6.1.1 Reagent water can be generated by passing tap water through a carbon filter bed containing about 1 lb of activated carbon (Filtrasorb-300, Calgon Corp., or equivalent).

6.1.2 A water purification system (Millipore Super-Q or equivalent) may be used to generate reagent water.

6.1.3 Reagent water may also be prepared by boiling water for 15 min. Subsequently, while maintaining the temperature at 90 °C, bubble a contaminant-free inert gas through the water for 1 h. While still hot, transfer the water to a narrow mouth screw-cap bottle and seal with a Teflon-lined septum and cap.

6.2 Sodium thiosulfate—(ACS) Granular.

6.3 Trap Materials:

6.3.1 Coconut charcoal—6/10 mesh sieved to 26 mesh, Barnabey Cheney, CA–580–26 lot # M–2649 or equivalent.

6.3.2 2,6-Diphenylene oxide polymer—Tenax, (60/80 mesh), chromatographic grade or equivalent.

6.3.3 Methyl silicone packing—3% OV–1 on Chromosorb-W (60/80 mesh) or equivalent.

6.3.4 Silica gel—35/60 mesh, Davison, grade-15 or equivalent.

6.4 Methanol—Pesticide quality or equivalent.

6.5 Stock standard solutions—Stock standard solutions may be prepared from pure standard materials or purchased as certified solutions. Prepare stock standard solutions in methanol using assayed liquids or gases as appropriate. Because of the toxicity of some of the organohalides, primary dilutions of these materials should be prepared in a hood. A NIOSH/MESA approved toxic gas respirator should be used when the analyst handles high concentrations of such materials.

6.5.1 Place about 9.8 mL of methanol into a 10-mL ground glass stoppered volumetric flask. Allow the flask to stand, unstoppered, for about 10 min or until all alcohol wetted surfaces have dried. Weigh the flask to the learest 0.1 mg.

6.5.2 Add the assayed reference material:

6.5.2.1 Liquid—Using a 100 μL syringe, immediately add two or more drops of assayed reference material to the flask, then reweigh. Be sure that the drops fall directly into the alcohol without contacting the neck of the flask.

6.5.2.2 Gases—To prepare standards for any of the six halocarbons that boil below 30 °C (bromomethane, chloroethane, chloromethane, dichlorodifluoromethane, trichlorofluoromethane, vinyl chloride), fill a 5-mL valved gas-tight syringe with the reference standard to the 5.0-mL mark. Lower the needle to 5 mm above the methanol meniscus. Slowly introduce the reference standard above the surface of the liquid (the heavy gas will rapidly dissolve into the methanol).

6.5.3 Reweigh, dilute to volume, stopper, then mix by inverting the flask several times. Calculate the concentration in μg/μL from the net gain in weight. When compound purity is assayed to be 96% or greater, the weight can be used without correction to calculate the concentration of the stock standard. Commercially prepared stock standards can be used at any concentration if they are certified by the malufacturer or by an independent source.

6.5.4 Transfer the stock standard solution into a Teflon-sealed screw-cap bottle. Store, with minimal headspace, at −10 to −20 °C and protect from light.

6.5.5 Prepare fresh standards weekly for the six gases and 2-chloroethylvinyl ether. All other standards must be replaced after one month, or sooner if comparison with check standards indicates a problem.

6.6 Secondary dilution standards—Using stock standard solutions, prepare secondary dilution standards in methanol that contain the compounds of interest, either singly or mixed together. The secondary dilution standards should be prepared at concentrations such that the aqueous calibration standards prepared in Section 7.3.1 or 7.4.1 will bracket the working range of the analytical system. Secondary dilution standards should be stored with minimal headspace and should be checked frequently for signs of degradation or evaporation, especially just prior to preparing calibration standards from them.

6.7 Quality control check sample concentrate—See Section 8.2.1.

7. Calibration

7.1 Assemble a purge and trap system that meets the specifications in Section 5.2. Condition the trap overnight at 180 °C by backflushing with an inert gas flow of at least 20 mL/min. Condition the trap for 10 min once daily prior to use.

7.2 Connect the purge and trap system to a gas chromatograph. The gas chromatograph must be operated using temperature and flow rate conditions equivalent to those given in Table 1. Calibrate the purge and trap-gas chromatographic system using either the external standard technique (Section 7.3) or the internal standard technique (Section 7.4).

7.3 External standard calibration procedure:

7.3.1 Prepare calibration standards at a miminum of three concentration levels for each parameter by carefully adding 20.0 μL of one or more secondary dilution standards to 100, 500, or 1000 μL of reagent water. A 25-μL syringe with a 0.006 in. ID needle should be used for this operation. One of the external standards should be at a concentration near, but above, the MDL (Table 1) and the other concentrations should correspond to the expected range of concentrations found in real samples or should define the working range of the detector. These aqueous standards can be stored up to 24 h, if held in sealed vials with zero headspace as described in Section 9.2. If not so stored, they must be discarded after 1 h.

7.3.2 Analyze each calibration standard according to Section 10, and tabulate peak height or area responses versus the concentration in the standard. The results can be used to prepare a calibration curve for each compound. Alternatively, if the ratio of response to concentration (calibration factor) is a constant over the working range (<10% relative standard deviation, RSD), linearity through the origin can be assumed and the average ratio or calibration factor can be used in place of a calibration curve.

7.4 Internal standard calibration procedure—To use this approach, the analyst must select one or more internal standards that are similar in analytical behavior to the compounds of interest. The analyst must further demonstrate that the measurement of the internal standard is not affected by method or matrix interferences. Because of these limitations, no internal standard can be suggested that is applicable to all samples. The compounds recommended for use as surrogate spikes in Section 8.7 have been used successfully as internal standards, because of their generally unique retention times.

7.4.1 Prepare calibration standards at a minimum of three concentration levels for each parameter of interest as described in Section 7.3.1.

7.4.2 Prepare a spiking solution containing each of the internal standards using the procedures described in Sections 6.5 and 6.6. It is recommended that the secondary dilution standard be prepared at a concentration of 15 µg/mL of each internal standard compound. The addition of 10 µL of this standard to 5.0 mL of sample or calibration standard would be equivalent to 30 µg/L.

7.4.3 Analyze each calibration standard according to Section 10, adding 10 µL of internal standard spiking solution directly to the syringe (Section 10.4). Tabulate peak height or area responses against concentration for each compound and internal standard, and calculate response factors (RF) for each compound using Equation 1.

$$RF = \frac{(A_s)(C_{is})}{(A_{is})(C_s)}$$

Equation 1

where:

A_s=Response for the parameter to be measured.

A_{is}=Response for the internal standard.

C_{is}=Concentration of the internal standard.

C_s=Concentration of the parameter to be measured.

If the RF value over the working range is a constant (<10% RSD), the RF can be assumed to be invariant and the average RF can be used for calculations. Alternatively, the results can be used to plot a calibration curve of response ratios, A_s/A_{is}, vs. RF.

7.5 The working calibration curve, calibration factor, or RF must be verified on each working day by the measurement of a QC check sample.

7.5.1 Prepare the QC check sample as described in Section 8.2.2.

7.5.2 Analyze the QC check sample according to Section 10.

7.5.3 For each parameter, compare the response (Q) with the corresponding calibration acceptance criteria found in Table 2. If the responses for all parameters of interest fall within the designated ranges, analysis of actual samples can begin. If any individual Q falls outside the range, proceed according to Section 7.5.4.

NOTE: The large number of parameters in Table 2 present a substantial probability that one or more will not meet the calibration acceptance criteria when all parameters are analyzed.

7.5.4 Repeat the test only for those parameters that failed to meet the calibration acceptance criteria. If the response for a parameter does not fall within the range in this second test, a new calibration curve, calibration factor, or RF must be prepared for that parameter according to Section 7.3 or 7.4.

8. Quality Control

8.1 Each laboratory that uses this method is required to operate a formal quality control program. The minimum requirements of this program consist of an initial demonstration of laboratory capability and an ongoing analysis of spiked samples to evaluate and document data quality. The laboratory must maintain records to document the quality of data that is generated. Ongoing data quality checks are compared with established performance criteria to determine if the results of analyses meet the performance characteristics of the method. When results of sample spikes indicate atypical method performance, a quality control check standard must be analyzed to confirm that the measurements were performed in an in-control mode of operation.

8.1.1 The analyst must make an initial, one-time, demonstration of the ability to generate acceptable accuracy and precision with this method. This ability is established as described in Section 8.2.

8.1.2 In recognition of advances that are occurring in chromatography, the analyst is permitted certain options (detailed in Section 10.1) to improve the separations or lower the cost of measurements. Each time such a modification is made to the method, the analyst is required to repeat the procedure in Section 8.2.

8.1.3 Each day, the analyst must analyze a reagent water blank to demonstrate that interferences from the analytical system are under control.

8.1.4 The laboratory must, on an ongoing basis, spike and analyze a minimum of 10% of all samples to monitor and evaluate laboratory data quality. This procedure is described in Section 8.3.

8.1.5 The laboratory must, on an ongoing basis, demonstrate through the analyses of quality control check standards that the operation of the measurement system is in control. This procedure is described in Section 8.4. The frequency of the check standard analyses is equivalent to 10% of all samples analyzed but may be reduced if spike recoveries from samples (Section 8.3) meet all specified quality control criteria.

8.1.6 The laboratory must maintain performance records to document the quality of data that is generated. This procedure is described in Section 8.5.

8.2 To establish the ability to generate acceptable accuracy and precision, the analyst must perform the following operations.

8.2.1 A quality control (QC) check sample concentrate is required containing each parameter of interest at a concentration of 10 µg/mL in methanol. The QC check sample concentrate must be obtained from the U.S. Environmental Protection Agency, Environmental Monitoring and Support Laboratory in Cincinnati, Ohio, if available. If not available from that source, the QC check sample concentrate must be obtained from another external source. If not available from either source above, the QC check sample concentrate must be prepared by the laboratory using stock standards prepared independently from those used for calibration.

8.2.2 Prepare a QC check sample to contain 20 µg/L of each parameter by adding 200 µL of QC check sample concentrate to 100 mL of reagent water.

8.2.3 Analyze four 5-mL aliquots of the well-mixed QC check sample according to Section 10.

8.2.4 Calculate the average recovery ($\bar{X}$) in µg/L, and the standard deviation of the recovery (s) in µg/L, for each parameter of interest using the four results.

8.2.5 For each parameter compare s and $\bar{X}$ with the corresponding acceptance criteria for precision and accuracy, respectively, found in Table 2. If s and $\bar{X}$ for all parameters of interest meet the acceptance criteria, the system performance is acceptable and analysis of actual samples can begin. If any individual s exceeds the precision limit or any individual $\bar{X}$ falls outside the range for accuracy, then the system performance is unacceptable for that parameter.

NOTE: The large number of parameters in Table 2 present a substantial probability that one or more will fail at least one of the acceptance criteria when all parameters are analyzed.

8.2.6 When one or more of the parameters tested fail at least one of the acceptance criteria, the analyst must proceed according to Section 8.2.6.1 or 8.2.6.2.

8.2.6.1 Locate and correct the source of the problem and repeat the test for all parameters of interest beginning with Section 8.2.3.

8.2.6.2 Beginning with Section 8.2.3, repeat the test only for those parameters that failed to meet criteria. Repeated failure, however, will confirm a general problem with the measurement system. If this occurs, locate and correct the source of the problem and repeat the test for all compounds of interest beginning with Section 8.2.3.

8.3 The laboratory must, on an ongoing basis, spike at least 10% of the samples from each sample site being monitored to assess accuracy. For laboratories analyzing one to ten samples per month, at least one spiked sample per month is required.

8.3.1 The concentration of the spike in the sample should be determined as follows:

8.3.1.1 If, as in compliance monitoring, the concentration of a specific parameter in the sample is being checked against a regulatory concentration limit, the spike should be at that limit or 1 to 5 times higher than the background concentration determined in Section 8.3.2, whichever concentration would be larger.

8.3.1.2 If the concentration of a specific parameter in the sample is not being checked against a limit specific to that parameter, the spike should be at 20 µg/L or 1 to 5 times higher than the background concentration determined in Section 8.3.2, whichever concentration would be larger.

8.3.2 Analyze one 5-mL sample aliquot to determine the background concentration (B) of each parameter. If necessary, prepare a new QC check sample concentrate (Section 8.2.1) appropriate for the background concentrations in the sample. Spike a second 5-mL sample aliquot with 10 µL of the QC check sample concentrate and analyze it to determine the concentration after spiking (A) of each parameter. Calculate each percent recovery (P) as $100(A-B)\%/T$, where T is the known true value of the spike.

8.3.3 Compare the percent recovery (P) for each parameter with the corresponding QC acceptance criteria found in Table 2. These acceptance criteria were calculated to include an allowance for error in measurement of both the background and spike concentrations, assuming a spike to background ratio of 5:1. This error will be accounted for to the extent that the analyst's spike to background ratio approaches 5:1.[7] If spiking was performed at a concentration lower than 20 µg/L, the analyst must use either the QC acceptance criteria in Table 2, or optional QC acceptance criteria calculated for the specific spike concentration. To calculate optional acceptance criteria for the recovery of a parameter: (1) Calculate accuracy (X') using the equation in Table 3, substituting the spike concentration (T) for C; (2) calculate overall precision (S') using the equation in Table 3, substituting X' for $\bar{X}$; (3) calculate the range for recovery at the spike concentration as $(100\ X'/T) \pm 2.44(100\ S'/T)\%$.[7]

8.3.4 If any individual P falls outside the designated range for recovery, that parameter has failed the acceptance criteria. A check standard containing each parameter that failed the criteria must be analyzed as described in Section 8.4.

8.4 If any parameter fails the acceptance criteria for recovery in Section 8.3, a QC check standard containing each parameter that failed must be prepared and analyzed.

NOTE: The frequency for the required analysis of a QC check standard will depend upon the number of parameters being simultaneously tested, the complexity of the sample matrix, and the performance of the laboratory. If the entire list of parameters in Table 2 must be measured in the sample in Section 8.3, the probability that the analysis of a QC check standard will be required is high. In this case the QC check standard should be routinely analyzed with the spiked sample.

8.4.1 Prepare the QC check standard by adding 10 µL of QC check sample concentrate (Section 8.2.1 or 8.3.2) to 5 mL of reagent water. The QC check standard needs only to contain the parameters that failed criteria in the test in Section 8.3.

8.4.2 Analyze the QC check standard to determine the concentration measured (A) of each parameter. Calculate each percent recovery (P_s) as 100 (A/T)%, where T is the true value of the standard concentration.

8.4.3 Compare the percent recovery (P_s) for each parameter with the corresponding QC acceptance criteria found in Table 2. Only parameters that failed the test in Section 8.3 need to be compared with these criteria. If the recovery of any such parameter falls outside the designated range, the laboratory performance for that parameter is judged to be out of control, and the problem must be immediately identified and corrected. The analytical result for that parameter in the unspiked sample is suspect and may not be reported for regulatory compliance purposes.

8.5 As part of the QC program for the laboratory, method accuracy for wastewater samples must be assessed and records must be maintained. After the analysis of five spiked wastewater samples as in Section 8.3, calculate the average percent recovery ($\bar{P}$) and the standard deviation of the percent recovery (s_p). Express the accuracy assessment as a percent recovery interval from $\bar{P}-2s_p$ to $\bar{P}+2s_p$. If $\bar{p}=90\%$ and $s_p=10\%$, for example, the accuracy interval is expressed as 70–110%. Update the accuracy assessment for each parameter on a regular basis (e.g. after each five to ten new accuracy measurements).

8.6 It is recommended that the laboratory adopt additional quality assurance practices for use with this method. The specific practices that are most productive depend upon the needs of the laboratory and the nature of the samples. Field duplicates may be analyzed to assess the precision of the environmental measurements. When doubt exists over the identification of a peak on the chromatogram, confirmatory techniques such as gas chromatography with a dissimilar column, specific element detector, or mass spectrometer must be used. Whenever possible, the laboratory should analyze standard reference materials and participate in relevant performance evaluation studies.

8.7 The analyst should monitor both the performance of the analytical system and the effectiveness of the method in dealing with each sample matrix by spiking each sample, standard, and reagent water blank with surrogate halocarbons. A combination of bromochloromethane, 2-bromo-1-chloropropane, and 1,4-dichlorobutane is recommended to encompass the range of the temperature program used in this method. From stock standard solutions prepared as in Section 6.5, add a volume to give 750 µg of each surrogate to 45 mL of reagent water contained in a 50-mL volumetric flask, mix and dilute to volume for a concentration of 15 ng/µL. Add 10 µL of this surrogate spiking solution directly into the 5-mL syringe with every sample and reference standard analyzed. Prepare a fresh surrogate spiking solution on a weekly basis. If the internal standard calibration procedure is being used, the surrogate compounds may be added directly to the internal standard spiking solution (Section 7.4.2).

9. Sample Collection, Preservation, and Handling

9.1 All samples must be iced or refrigerated from the time of collection until analysis. If the sample contains free or combined chlorine, add sodium thiosulfate preservative (10 mg/40 mL is sufficient for up to 5 ppm Cl_2) to the empty sample bottle just prior to shipping to the sampling site. EPA Methods 330.4 and 330.5 may be used for measurement of residual chlorine.[8] Field test kits are available for this purpose.

9.2 Grab samples must be collected in glass containers having a total volume of at least 25 mL. Fill the sample bottle just to overflowing in such a manner that no air bubbles pass through the sample as the bottle is being filled. Seal the bottle so that no air bubbles are entrapped in it. If preservative has been added, shake vigorously for 1 min. Maintain the hermetic seal on the sample bottle until time of analysis.

9.3 All samples must be analyzed within 14 days of collection.[3]

10. Procedure

10.1 Table 1 summarizes the recommended operating conditions for the gas chromatograph. Included in this table are estimated retention times and MDL that can be achieved under these conditions. An example of the separations achieved by Column 1 is shown in Figure 5. Other packed columns, chromatographic conditions, or detectors may be used if the requirements of Section 8.2 are met.

10.2 Calibrate the system daily as described in Section 7.

10.3 Adjust the purge gas (nitrogen or helium) flow rate to 40 mL/min. Attach the trap inlet to the purging device, and set the purge and trap system to purge (Figure 3). Open the syringe valve located on the purging device sample introduction needle.

10.4 Allow the sample to come to ambient temperature prior to introducing it to the syringe. Remove the plunger from a 5-mL syringe and attach a closed syringe valve. Open the sample bottle (or standard) and carefully pour the sample into the syringe barrel to just short of overflowing. Replace the syringe plunger and compress the sample. Open the syringe valve and vent any residual air while adjusting the sample volume to 5.0 mL. Since this process of taking an aliquot destroys the validity of the sample for future analysis, the analyst should fill a second syringe at this time to protect against possible loss of data. Add 10.0 µL of the surrogate spiking solution (Section 8.7) and 10.0 µL of the internal standard spiking solution (Section 7.4.2), if applicable, through the valve bore, then close the valve.

10.5 Attach the syringe-syringe valve assembly to the syringe valve on the purging device. Open the syringe valves and inject the sample into the purging chamber.

10.6 Close both valves and purge the sample for 11.0 ±0.1 min at ambient temperature.

10.7 After the 11-min purge time, attach the trap to the chromatograph, adjust the purge and trap system to the desorb mode (Figure 4), and begin to temperature program the gas chromatograph. Introduce the trapped materials to the GC column by rapidly heating the trap to 180 °C while backflushing the trap with an inert gas between 20 and 60 mL/min for 4 min. If rapid heating of the trap cannot be achieved, the GC column must be used as a secondary trap by cooling it to 30 °C (subambient temperature, if poor peak geometry or random retention time problems persist) instead of the initial program temperature of 45 °C

10.8 While the trap is being desorbed into the gas chromatograph, empty the purging chamber using the sample introduction syringe. Wash the chamber with two 5-mL flushes of reagent water.

10.9 After desorbing the sample for 4 min, recondition the trap by returning the purge and trap system to the purge mode. Wait 15 s then close the syringe valve on the purging device to begin gas flow through the trap. The trap temperature should be maintained at 180 °C After approximately 7 min, turn off the trap heater and open the syringe valve to stop the gas flow through the trap. When the trap is cool, the next sample can be analyzed.

10.10 Identify the parameters in the sample by comparing the retention times of the peaks in the sample chromatogram with those of the peaks in standard chromatograms. The width of the retention time window used to make identifications should be based upon measurements of actual retention time variations of standards over the course of a day. Three times the standard deviation of a retention time for a compound can be used to calculate a suggested window size; however, the experience of the analyst should weigh heavily in the interpretation of chromatograms.

10.11 If the response for a peak exceeds the working range of the system, prepare a dilution of the sample with reagent water from the aliquot in the second syringe and reanalyze.

11. Calculations

11.1 Determine the concentration of individual compounds in the sample.

11.1.1 If the external standard calibration procedure is used, calculate the concentration of the parameter being measured from the peak response using the calibration curve or calibration factor determined in Section 7.3.2.

11.1.2 If the internal standard calibration procedure is used, calculate the concentration in the sample using the response factor (RF) determined in Section 7.4.3 and Equation 2.

Equation 2

$$\text{Concentration } (\mu\text{g/L}) = \frac{(A_s)(C_{is})}{(A_{is})(RF)}$$

where:

A_s=Response for the parameter to be measured.

A_{is}=Response for the internal standard.

C_{is}=Concentration of the internal standard.

11.2 Report results in µg/L without correction for recovery data. All QC data obtained should be reported with the sample results.

12. Method Performance

12.1 The method detection limit (MDL) is defined as the minimum concentration of a substance that can be measured and reported with 99% confidence that the value is above zero.[1] The MDL concentration listed in Table 1 were obtained using reagent water.[11]. Similar results were achieved using representative wastewaters. The MDL actually achieved in a given analysis will vary depending on instrument sensitivity and matrix effects.

12.2 This method is recommended for use in the concentration range from the MDL to 1000×MDL. Direct aqueous injection techniques should be used to measure concentration levels above 1000×MDL.

12.3 This method was tested by 20 laboratories using reagent water, drinking water, surface water, and three industrial wastewaters spiked at six concentrations over the range 8.0 to 500 µg/L.[9] Single operator precision, overall precision, and method accuracy were found to be directly related to the concentration of the parameter and essentially independent of the sample matrix. Linear equations to describe these relationships are presented in Table 3.

References

1. 40 CFR part 136, appendix B.

2. Bellar, T.A., and Lichtenberg, J.J. ''Determining Volatile Organics at Microgram-per-Litre-Levels by Gas Chromatography,'' *Journal of the American Water Works Association*, *66*, 739 (1974).

3. Bellar, T.A., and Lichtenberg, J.J. ''Semi-Automated Headspace Analysis of Drinking Waters and Industrial Waters for Purgeable Volatile Organic Compounds,'' Proceedings from Symposium on Measurement of Organic Pollutants in Water and Wastewater, American Society for Testing and Materials, STP 686, C.E. Van Hall, editor, 1978.

4. ''Carcinogens—Working With Carcinogens,'' Department of Health, Education, and Welfare, Public Health Service, Center for Disease Control, National Institute for Occupational Safety and Health, Publication No. 77–206, August 1977.

5. ''OSHA Safety and Health Standards, General Industry'' (29 CFR part 1910), Occupational Safety and Health Administration, OSHA 2206 (Revised, January 1976).

6. ''Safety in Academic Chemistry Laboratories,'' American Chemical Society Publication, Committee on Chemical Safety, 3rd Edition, 1979.

7. Provost, L.P., and Elder, R.S. ''Interpretation of Percent Recovery Data,'' *American Laboratory*, *15*, 58–63 (1983). (The value 2.44 used in the equation in Section 8.3.3 is two times the value 1.22 derived in this report.)

8. ''Methods 330.4 (Titrimetric, DPD-FAS) and 330.5 (Spectrophotometric, DPD) for Chlorine, Total Residual,'' Methods for Chemical Analysis of Water and Wastes, EPA 600/4–79–020, U.S. Environmental Protection Agency, Environmental Monitoring and Support Laboratory, Cincinnati, Ohio 45268, March 1979.

9. ''EPA Method Study 24, Method 601—Purgeable Halocarbons by the Purge and Trap Method,'' EPA 600/4–84–064, National Technical Information Service, PB84–212448, Springfield, Virginia 22161, July 1984.

10. ''Method Validation Data for EPA Method 601,'' Memorandum from B. Potter, U.S. Environmental Protection Agency, Environmental Monitoring and Support Laboratory, Cincinnati, Ohio 45268, November 10, 1983.

11. Bellar, T. A., Unpublished data, U.S. Environmental Protection Agency, Environmental Monitoring and Support Laboratory, Cincinnati, Ohio 45268, 1981.

TABLE 1—CHROMATOGRAPHIC CONDITIONS AND METHOD DETECTION LIMITS

Parameter	Retention time (min)		Method detection limit (µg/L)
	Column 1	Column 2	
Chloromethane	1.50	5.28	0.08
Bromomethane	2.17	7.05	1.18
Dichlorodifluoromethane	2.62	nd	1.81
Vinyl chloride	2.67	5.28	0.18
Chloroethane	3.33	8.68	0.52
Methylene chloride	5.25	10.1	0.25
Trichlorofluoromethane	7.18	nd	nd
1,1-Dichloroethene	7.93	7.72	0.13
1,1-Dichloroethane	9.30	12.6	0.07
trans-1,2-Dichloroethene	10.1	9.38	0.10
Chloroform	10.7	12.1	0.05
1,2-Dichloroethane	11.4	15.4	0.03
1,1,1-Trichloroethane	12.6	13.1	0.03
Carbon tetrachloride	13.0	14.4	0.12
Bromodichloromethane	13.7	14.6	0.10
1,2-Dichloropropane	14.9	16.6	0.04
cis-1,3-Dichloropropene	15.2	16.6	0.34
Trichloroethene	15.8	13.1	0.12
Dibromochloromethane	16.5	16.6	0.09

TABLE 1—CHROMATOGRAPHIC CONDITIONS AND METHOD DETECTION LIMITS—Continued

Parameter	Retention time (min)		Method detection limit (µg/L)
	Column 1	Column 2	
1,1,2-Trichloroethane	16.5	18.1	0.02
trans-1,3-Dichloropropene	16.5	18.0	0.20
2-Chloroethylvinyl ether	18.0	nd	0.13
Bromoform	19.2	19.2	0.20
1,1,2,2-Tetrachloroethane	21.6	nd	0.03
Tetrachloroethene	21.7	15.0	0.03
Chlorobenzene	24.2	18.8	0.25
1,3-Dichlorobenzene	34.0	22.4	0.32
1,2-Dichlorobenzene	34.9	23.5	0.15
1,4-Dichlorobenzene	35.4	22.3	0.24

Column 1 conditions: Carbopack B (60/80 mesh) coated with 1% SP–1000 packed in an 8 ft × 0.1 in. ID stainless steel or glass column with helium carrier gas at 40 mL/min flow rate. Column temperature held at 45 °C for 3 min then programmed at 8 °C/min to 220 °C and held for 15 min.

Column 2 conditions: Porisil-C (100/120 mesh) coated with n-octane packed in a 6 ft × 0.1 in. ID stainless steel or glass column with helium carrier gas at 40 mL/min flow rate. Column temperature held at 50 °C for 3 min then programmed at 6 °C/min to 170 °C and held for 4 min.

nd=not determined.

TABLE 2—CALIBRATION AND QC ACCEPTANCE CRITERIA—METHOD 601 [A]

Parameter	Range for Q (µg/L)	Limit for s (µg/L)	Range for $\bar{X}$ (µg/L)	Range P, P_s (%)
Bromodichloromethane	15.2–24.8	4.3	10.7–32.0	42–172
Bromoform	14.7–25.3	4.7	5.0–29.3	13–159
Bromomethane	11.7–28.3	7.6	3.4–24.5	D–144
Carbon tetrachloride	13.7–26.3	5.6	11.8–25.3	43–143
Chlorobenzene	14.4–25.6	5.0	10.2–27.4	38–150
Chloroethane	15.4–24.6	4.4	11.3–25.2	46–137
2-Chloroethylvinyl ether	12.0–28.0	8.3	4.5–35.5	14–186
Chloroform	15.0–25.0	4.5	12.4–24.0	49–133
Chloromethane	11.9–28.1	7.4	D–34.9	D–193
Dibromochloromethane	13.1–26.9	6.3	7.9–35.1	24–191
1,2-Dichlorobenzene	14.0–26.0	5.5	1.7–38.9	D–208
1,3-Dichlorobenzene	9.9–30.1	9.1	6.2–32.6	7–187
1,4-Dichlorobenzene	13.9–26.1	5.5	11.5–25.5	42–143
1,1-Dichloroethane	16.8–23.2	3.2	11.2–24.6	47–132
1,2-Dichloroethane	14.3–25.7	5.2	13.0–26.5	51–147
1,1-Dichloroethene	12.6–27.4	6.6	10.2–27.3	28–167
trans-1,2-Dichloroethene	12.8–27.2	6.4	11.4–27.1	38–155
1,2-Dichloropropane	14.8–25.2	5.2	10.1–29.9	44–156
cis-1,3-Dichloropropene	12.8–27.2	7.3	6.2–33.8	22–178
trans-1,3-Dichloropropene	12.8–27.2	7.3	6.2–33.8	22–178
Methylene chloride	15.5–24.5	4.0	7.0–27.6	25–162
1,1,2,2-Tetrachloroethane	9.8–30.2	9.2	6.6–31.8	8–184
Tetrachloroethene	14.0–26.0	5.4	8.1–29.6	26–162
1,1,1-Trichloroethane	14.2–25.8	4.9	10.8–24.8	41–138
1,1,2-Trichloroethane	15.7–24.3	3.9	9.6–25.4	39–136
Trichloroethene	15.4–24.6	4.2	9.2–26.6	35–146
Trichlorofluoromethane	13.3–26.7	6.0	7.4–28.1	21–156
Vinyl chloride	13.7–26.3	5.7	8.2–29.9	28–163

[a] Criteria were calculated assuming a QC check sample concentration of 20 µg/L.
Q=Concentration measured in QC check sample, in µg/L (Section 7.5.3).
s=Standard deviation of four recovery measurements, in µg/L (Section 8.2.4).
X=Average recovery for four recovery measurements, in µg/L (Section 8.2.4).
P, P_s=Percent recovery measured (Section 8.3.2, Section 8.4.2).
D=Detected; result must be greater than zero.

NOTE: These criteria are based directly upon the method performance data in Table 3. Where necessary, the limits for recovery have been broadened to assure applicability of the limits to concentrations below those used to develop Table 3.

TABLE 3—METHOD ACCURACY AND PRECISION AS FUNCTIONS OF CONCENTRATION—METHOD 601

Parameter	Accuracy, as recovery, X′ (µg/L)	Single analyst precision, s_r' (µg/L)	Overall precision, S′ (µg/L)
Bromodichloromethane	1.12C − 1.02	0.11$\bar{X}$+0.04	0.20$\bar{X}$+1.00
Bromoform	0.96C − 2.05	0.12$\bar{X}$+0.58	0.21$\bar{X}$+2.41
Bromomethane	0.76C − 1.27	0.28$\bar{X}$+0.27	0.36$\bar{X}$+0.94
Carbon tetrachloride	0.98C − 1.04	0.15$\bar{X}$+0.38	0.20$\bar{X}$+0.39
Chlorobenzene	1.00C − 1.23	0.15$\bar{X}$ − 0.02	0.18$\bar{X}$+1.21
Choroethane	0.99C − 1.53	0.14$\bar{X}$ − 0.13	0.17$\bar{X}$+0.63

TABLE 3—METHOD ACCURACY AND PRECISION AS FUNCTIONS OF CONCENTRATION—METHOD 601—Continued

Parameter	Accuracy, as recovery, X' (μg/L)	Single analyst precision, s_r' (μg/L)	Overall precision, S' (μg/L)
2-Chloroethylvinyl ether[a]	1.00C	$0.20\bar{X}$	$0.35\bar{X}$
Chloroform	0.93C−0.39	$0.13\bar{X}+0.15$	$0.19\bar{X}-0.02$
Chloromethane	0.77C+0.18	$0.28\bar{X}-0.31$	$0.52\bar{X}+1.31$
Dibromochloromethane	0.94C+2.72	$0.11\bar{X}+1.10$	$0.24\bar{X}+1.68$
1,2-Dichlorobenzene	0.93C+1.70	$0.20\bar{X}+0.97$	$0.13\bar{X}+6.13$
1,3-Dichlorobenzene	0.95C+0.43	$0.14\bar{X}+2.33$	$0.26\bar{X}+2.34$
1,4-Dichlorobenzene	0.93C−0.09	$0.15\bar{X}+0.29$	$0.20\bar{X}+0.41$
1,1-Dichloroethane	0.95C−1.08	$0.09\bar{X}+0.17$	$0.14\bar{X}+0.94$
1,2-Dichloroethane	1.04C−1.06	$0.11\bar{X}+0.70$	$0.15\bar{X}+0.94$
1,1-Dichloroethene	0.98C−0.87	$0.21\bar{X}-0.23$	$0.29\bar{X}-0.40$
trans-1,2-Dichloroethene	0.97C−0.16	$0.11\bar{X}+1.46$	$0.17\bar{X}+1.46$
1,2-Dichloropropane[a]	1.00C	$0.13\bar{X}$	$0.23\bar{X}$
cis-1,3-Dichloropropene[a]	1.00C	$0.18\bar{X}$	$0.32\bar{X}$
trans-1,3-Dichloropropene[a]	1.00C	$0.18\bar{X}$	$0.32\bar{X}$
Methylene chloride	0.91C−0.93	$0.11\bar{X}+0.33$	$0.21\bar{X}+1.43$
1,1,2,2-Tetrachloroethene	0.95C+0.19	$0.14\bar{X}+2.41$	$0.23\bar{X}+2.79$
Tetrachloroethene	0.94C+0.06	$0.14\bar{X}+0.38$	$0.18\bar{X}+2.21$
1,1,1-Trichloroethane	0.90C−0.16	$0.15\bar{X}+0.04$	$0.20\bar{X}+0.37$
1,1,2-Trichloroethane	0.86C+0.30	$0.13\bar{X}-0.14$	$0.19\bar{X}+0.67$
Trichloroethene	0.87C+0.48	$0.13\bar{X}-0.03$	$0.23\bar{X}+0.30$
Trichlorofluoromethane	0.89C−0.07	$0.15\bar{X}+0.67$	$0.26\bar{X}+0.91$
Vinyl chloride	0.97C−0.36	$0.13\bar{X}+0.65$	$0.27\bar{X}+0.40$

$\bar{X}'$=Expected recovery for one or more measurements of a sample containing a concentration of C, in μg/L.
s_n'=Expected single analyst standard deviation of measurements at an average concentration found of $\bar{X}$, in μg/L.
S^1=Expected interlaboratory standard deviation of measurements at an average concentration found of $\bar{X}$, in μg/L.
C=True value for the concentration, in μg/L.
$\bar{X}$=Average recovery found for measurements of samples containing a concentration of C, in μg/L.
[a] Estimates based upon the performance in a single laboratory.[10]

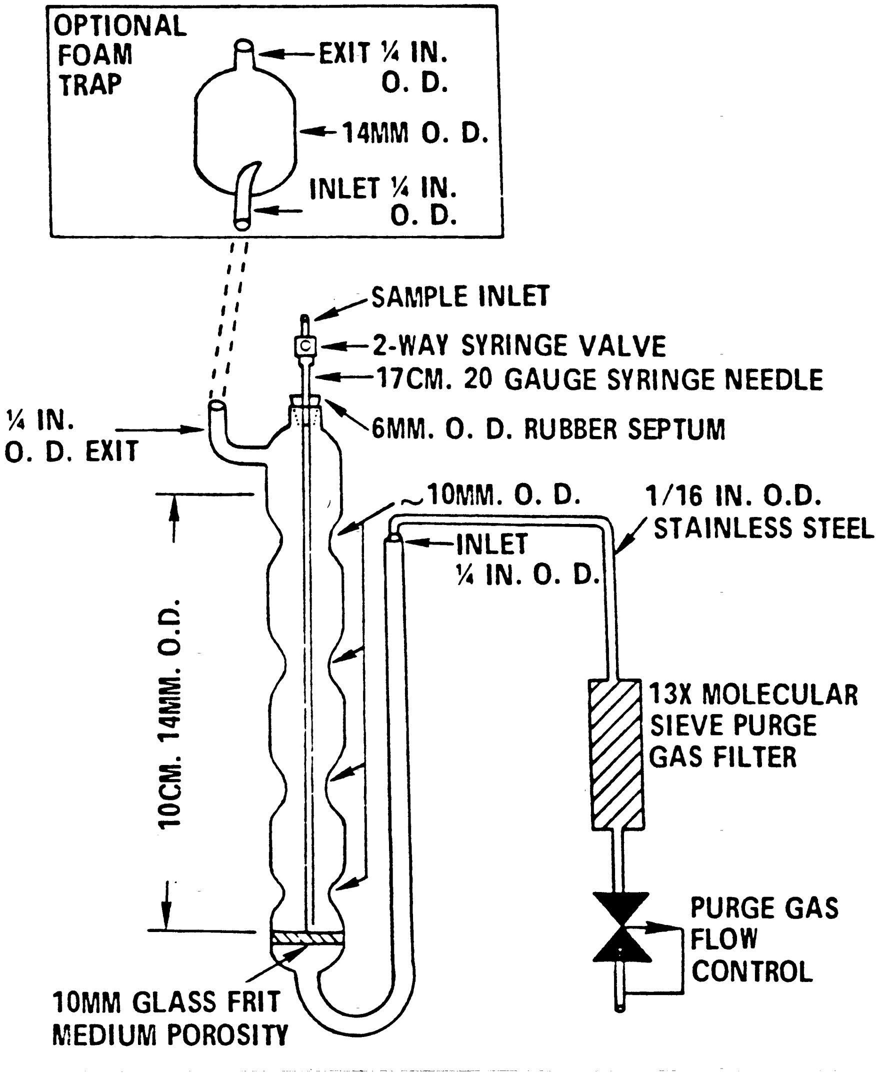

Figure 1. Purging device.

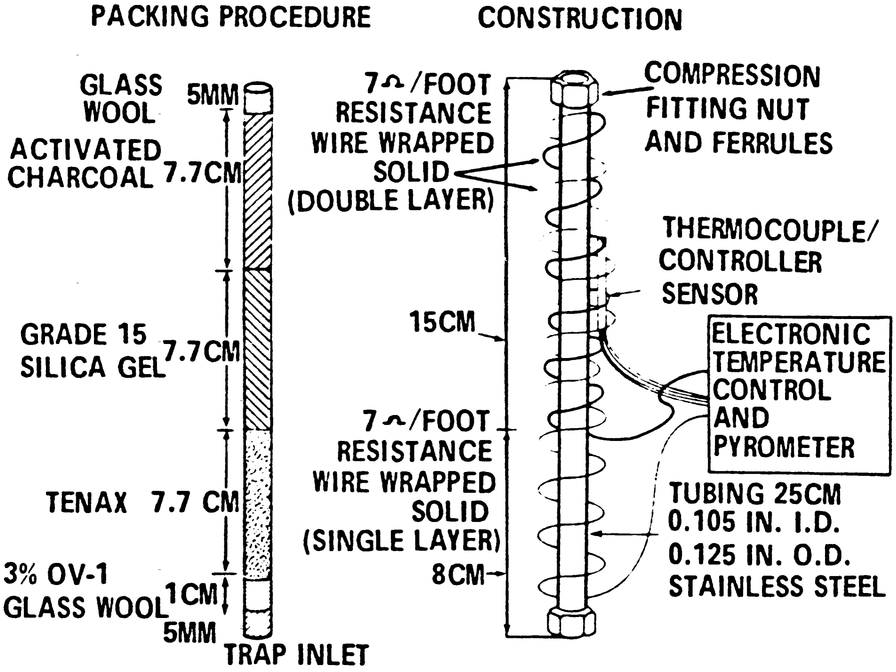

Figure 2. Trap packings and construction to include desorb capability

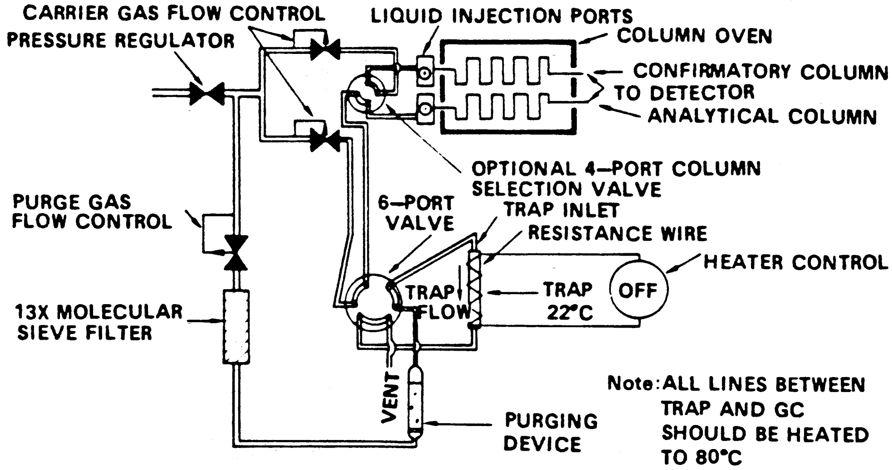

Figure 3. Purge and trap system-purge mode.

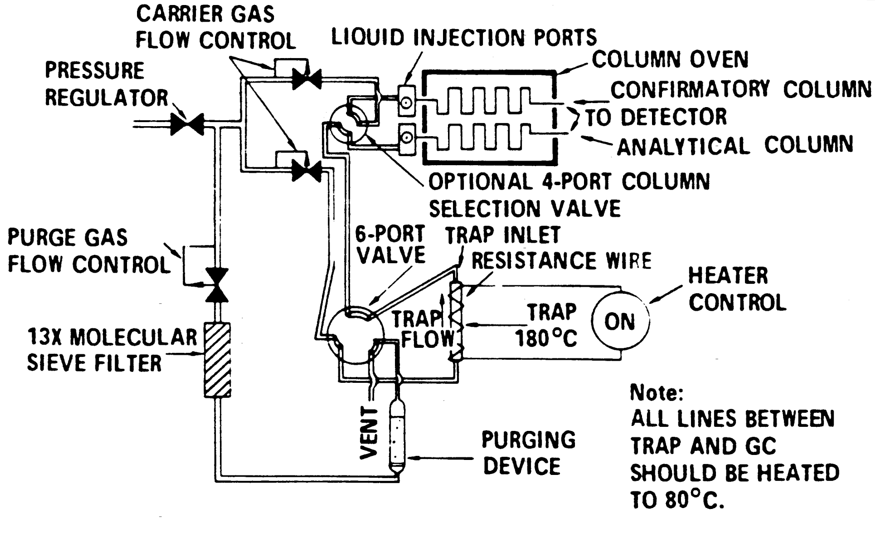

Figure 4. Purge and trap system - desorb mode.

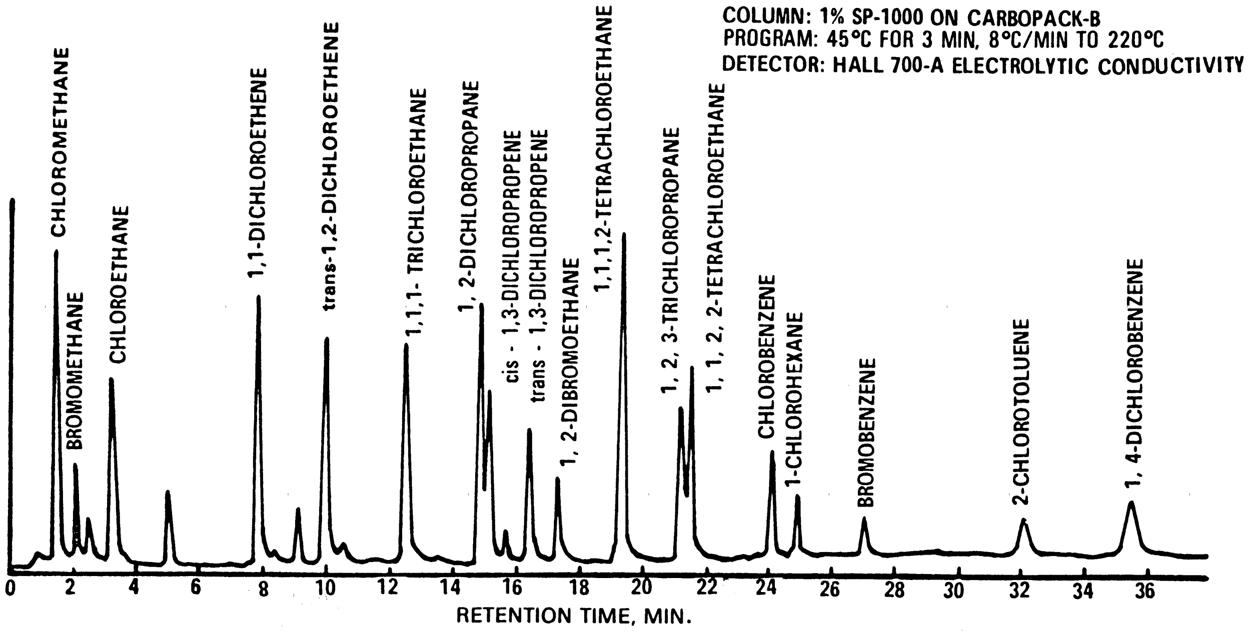

Figure 5. Gas chromatogram of purgeable halocarbons.

METHOD 602—PURGEABLE AROMATICS

1. Scope and Application

1.1 This method covers the determination of various purgeable aromatics. The following parameters may be determined by this method:

Parameter	STORET No.	CAS No.
Benzene	34030	71–43–2
Chlorobenzene	34301	108–90–7
1,2-Dichlorobenzene	34536	95–50–1
1,3-Dichlorobenzene	34566	541–73–1
1,4-Dichlorobenzene	34571	106–46–7
Ethylbenzene	34371	100–41–4
Toluene	34010	108–88–3

1.2 This is a purge and trap gas chromatographic (GC) method applicable to the determination of the compounds listed above in municipal and industrial discharges as provided under 40 CFR 136.1. When this method is used to analyze unfamiliar samples for any or all of the compounds above, compound identifications should be supported by at least one additional qualitative technique. This method describes analytical conditions for a second gas chromatographic column that can be used to confirm measurements made with the primary column. Method 624 provides gas chromatograph/mass spectrometer (GC/MS) conditions appropriate for the qualitative and quantitative confirmation of results for all of the parameters listed above.

1.3 The method detection limit (MDL, defined in Section 12.1)[1] for each parameter is listed in Table 1. The MDL for a specific wastewater may differ from those listed, depending upon the nature of interferences in the sample matrix.

1.4 Any modification of this method, beyond those expressly permitted, shall be considered as a major modification subject to application and approval of alternate test procedures under 40 CFR 136.4 and 136.5.

1.5 This method is restricted to use by or under the supervision of analysts experienced in the operation of a purge and trap system and a gas chromatograph and in the interpretation of gas chromatograms. Each analyst must demonstrate the ability to generate acceptable results with this method using the procedure described in Section 8.2.

2. Summary of Method

2.1 An inert gas is bubbled through a 5-mL water sample contained in a specially-designed purging chamber at ambient temperature. The aromatics are efficiently transferred from the aqueous phase to the vapor phase. The vapor is swept through a sorbent trap where the aromatics are trapped. After purging is completed, the trap is heated and backflushed with the inert gas to desorb the aromatics onto a gas chromatographic column. The gas chromatograph is temperature programmed to separate the aromatics which are then detected with a photoionization detector.[2,3]

2.2 The method provides an optional gas chromatographic column that may be helpful in resolving the compounds of interest from interferences that may occur.

3. Interferences

3.1 Impurities in the purge gas and organic compounds outgassing from the plumbing ahead of the trap account for the majority of contamination problems. The analytical system must be demonstrated to be free from contamination under the conditions of the analysis by running laboratory reagent blanks as described in Section 8.1.3. The use of non-Teflon plastic tubing, non-Teflon thread sealants, or flow controllers with rubber components in the purge and trap system should be avoided.

3.2 Samples can be contaminated by diffusion of volatile organics through the septum seal into the sample during shipment and storage. A field reagent blank prepared from reagent water and carried through the sampling and handling protocol can serve as a check on such contamination.

3.3 Contamination by carry-over can occur whenever high level and low level samples are sequentially analyzed. To reduce carry-over, the purging device and sample syringe must be rinsed with reagent water between sample analyses. Whenever an unusually concentrated sample is encountered, it should be followed by an analysis of reagent water to check for cross contamination. For samples containing large amounts of water-soluble materials, suspended solids, high boiling compounds or high aromatic levels, it may be necessary to wash the purging device with a detergent solution, rinse it with distilled water, and then dry it in an oven at 105 °C between analyses. The trap and other parts of the system are also subject to contamination; therefore, frequent bakeout and purging of the entire system may be required.

4. Safety

4.1 The toxicity or carcinogenicity of each reagent used in this method has not been precisely defined; however, each chemical compound should be treated as a potential health hazard. From this viewpoint, exposure to these chemicals must be reduced to the lowest possible level by whatever means available. The laboratory is responsible for maintaining a current awareness file of OSHA regulations regarding the safe handling of the chemicals specified in this method. A reference file of material data handling sheets should also be made available to all personnel involved in the chemical analysis. Additional references to laboratory safety are available and have been identified[4,6] for the information of the analyst.

4.2 The following parameters covered by this method have been tentatively classified as known or suspected, human or mammalian carcinogens: benzene and 1,4-dichlorobenzene. Primary standards of these toxic compounds should be prepared in a hood. A NIOSH/MESA approved toxic gas respirator should be worn when the analyst handles high concentrations of these toxic compounds.

5. Apparatus and Materials

5.1 Sampling equipment, for discrete sampling.

5.1.1 Vial]25-mL capacity or larger, equipped with a screw cap with a hole in the center (Pierce #13075 or equivalent). Detergent wash, rinse with tap and distilled water, and dry at 105 °C before use.

5.1.2 Septum—Teflon-faced silicone (Pierce #12722 or equivalent). Detergent wash, rinse with tap and distilled water, and dry at 105 °C for 1 h before use.

5.2 Purge and trap system—The purge and trap system consists of three separate pieces of equipment: A purging device, trap, and desorber. Several complete systems are now commercially available.

5.2.1 The purging device must be designed to accept 5-mL samples with a water column at least 3 cm deep. The gaseous head space between the water column and the trap must have a total volume of less than 15 mL. The purge gas must pass through the water column as finely divided bubbles with a diameter of less than 3 mm at the origin. The purge gas must be introduced no more than 5 mm from the base of the water column. The purging device illustrated in Figure 1 meets these design criteria.

5.2.2 The trap must be at least 25 cm long and have an inside diameter of at least 0.105 in.

5.2.2.1 The trap is packed with 1 cm of methyl silicone coated packing (Section 6.4.2) and 23 cm of 2,6-diphenylene oxide polymer (Section 6.4.1) as shown in Figure 2. This trap was used to develop the method performance statements in Section 12.

5.2.2.2 Alternatively, either of the two traps described in Method 601 may be used, although water vapor will preclude the measurement of low concentrations of benzene.

5.2.3 The desorber must be capable of rapidly heating the trap to 180 °C. The polymer section of the trap should not be heated higher than 180 °C and the remaining sections should not exceed 200 °C. The desorber illustrated in Figure 2 meets these design criteria.

5.2.4 The purge and trap system may be assembled as a separate unit or be coupled to a gas chromatograph as illustrated in Figures 3, 4, and 5.

5.3 Gas chromatograph—An analytical system complete with a temperature programmable gas chromatograph suitable for on-column injection and all required accessories including syringes, analytical columns, gases, detector, and strip-chart recorder. A data system is recommended for measuring peak areas.

5.3.1 Column 1—6 ft long × 0.082 in. ID stainless steel or glass, packed with 5% SP–1200 and 1.75% Bentone-34 on Supelcoport (100/120 mesh) or equivalent. This column was used to develop the method performance statements in Section 12. Guidelines for the use of alternate column packings are provided in Section 10.1.

5.3.2 Column 2—8 ft long × 0.1 in ID stainless steel or glass, packed with 5% 1,2,3-Tris(2-cyanoethoxy)propane on Chromosorb W-AW (60/80 mesh) or equivalent.

5.3.3 Detector—Photoionization detector (h-Nu Systems, Inc. Model PI–51–02 or equivalent). This type of detector has been proven effective in the analysis of wastewaters for the parameters listed in the scope (Section 1.1), and was used to develop the method performance statements in Section 12. Guidelines for the use of alternate detectors are provided in Section 10.1.

5.4 Syringes—5-mL glass hypodermic with Luerlok tip (two each), if applicable to the purging device.

5.5 Micro syringes—25-µL, 0.006 in. ID needle.

5.6 Syringe valve—2-way, with Luer ends (three each).

5.7 Bottle—15-mL, screw-cap, with Teflon cap liner.

5.8 Balance—Analytical, capable of accurately weighing 0.0001 g.

6. Reagents

6.1 Reagent water—Reagent water is defined as a water in which an interferent is not observed at the MDL of the parameters of interest.

6.1.1 Reagent water can be generated by passing tap water through a carbon filter bed containing about 1 lb of activated carbon (Filtrasorb-300, Calgon Corp., or equivalent).

6.1.2 A water purification system (Millipore Super-Q or equivalent) may be used to generate reagent water.

6.1.3 Reagent water may also be prepared by boiling water for 15 min. Subsequently, while maintaining the temperature at 90 °C, bubble a contaminant-free inert gas through the water for 1 h. While still hot, transfer the water to a narrow mouth screw-cap bottle and seal with a Teflon-lined septum and cap.

6.2 Sodium thiosulfate—(ACS) Granular.

6.3 Hydrochloric acid (1+1)—Add 50 mL of concentrated HCl (ACS) to 50 mL of reagent water.

6.4 Trap Materials:

6.4.1 2,6-Diphenylene oxide polymer—Tenax, (60/80 mesh), chromatographic grade or equivalent.

6.4.2 Methyl silicone packing—3% OV–1 on Chromosorb-W (60/80 mesh) or equivalent.

6.5 Methanol—Pesticide quality or equivalent.

6.6 Stock standard solutions—Stock standard solutions may be prepared from pure standard materials or purchased as certified solutions. Prepare stock standard solutions in methanol using assayed liquids. Because of the toxicity of benzene and 1,4-dichlorobenzene, primary dilutions of these materials should be prepared in a hood. A NIOSH/MESA approved toxic gas respirator should be used when the analyst handles high concentrations of such materials.

6.6.1 Place about 9.8 mL of methanol into a 10–mL ground glass stoppered volumetric flask. Allow the flask to stand, unstoppered, for about 10 min or until all alcohol wetted surfaces have dried. Weigh the flask to the nearest 0.1 mg.

6.6.2 Using a 100–μL syringe, immediately add two or more drops of assayed reference material to the flask, then reweigh. Be sure that the drops fall directly into the alcohol without contacting the neck of the flask.

6.6.3 Reweigh, dilute to volume, stopper, then mix by inverting the flask several times. Calculate the concentration in μg/μL from the net gain in weight. When compound purity is assayed to be 96% or greater, the weight can be used without correction to calculate the concentration of the stock standard. Commercially prepared stock standards can be used at any concentration if they are certified by the manufacturer or by an independent source.

6.6.4 Transfer the stock standard solution into a Teflon-sealed screw-cap bottle. Store at 4 °C and protect from light.

6.6.5 All standards must be replaced after one month, or sooner if comparison with check standards indicates a problem.

6.7 Secondary dilution standards—Using stock standard solutions, prepare secondary dilution standards in methanol that contain the compounds of interest, either singly or mixed together. The secondary dilution standards should be prepared at concentrations such that the aqueous calibration standards prepared in Section 7.3.1 or 7.4.1 will bracket the working range of the analytical system. Secondary solution standards must be stored with zero headspace and should be checked frequently for signs of degradation or evaporation, especially just prior to preparing calibration standards from them.

6.8 Quality control check sample concentrate—See Section 8.2.1.

7. Calibration

7.1 Assemble a purge and trap system that meets the specifications in Section 5.2. Condition the trap overnight at 180 °C by backflushing with an inert gas flow of at least 20 mL/min. Condition the trap for 10 min once daily prior to use.

7.2 Connect the purge and trap system to a gas chromatograph. The gas chromatograph must be operated using temperature and flow rate conditions equivalent to those given in Table 1. Calibrate the purge and trap-gas chromatographic system using either the external standard technique (Section 7.3) or the internal standard technique (Section 7.4).

7.3 External standard calibration procedure:

7.3.1 Prepare calibration standards at a minimum of three concentration levels for each parameter by carefully adding 20.0 μL of one or more secondary dilution standards to 100, 500, or 1000 mL of reagent water. A 25-μL syringe with a 0.006 in. ID needle should be used for this operation. One of the external standards should be at a concentration near, but above, the MDL (Table 1) and the other concentrations should correspond to the expected range of concentrations found in real samples or should define the working range of the detector. These aqueous standards must be prepared fresh daily.

7.3.2 Analyze each calibration standard according to Section 10, and tabulate peak height or area responses versus the concentration in the standard. The results can be used to prepare a calibration curve for each compound. Alternatively, if the ratio of response to concentration (calibration factor) is a constant over the working range (<10% relative standard deviation, RSD), linearity through the origin can be assumed and the average ratio or calibration factor can be used in place of a calibration curve.

7.4 Internal standard calibration procedure—To use this approach, the analyst must select one or more internal standards that are similar in analytical behavior to the compounds of interest. The analyst must further demonstrate that the measurement of the internal standard is not affected by method or matrix interferences. Because of these limitations, no internal standard can be suggested that is applicable to all samples. The compound, α,α,α,-trifluorotoluene, recommended as a surrogate spiking compound in Section 8.7 has been used successfully as an internal standard.

7.4.1 Prepare calibration standards at a minimum of three concentration levels for each parameter of interest as described in Section 7.3.1.

7.4.2 Prepare a spiking solution containing each of the internal standards using the procedures described in Sections 6.6 and 6.7. It is recommended that the secondary dilution standard be prepared at a concentration of 15 μg/mL of each internal standard compound. The addition of 10 μl of this standard to 5.0 mL of sample or calibration standard would be equivalent to 30 μg/L.

7.4.3 Analyze each calibration standard according to Section 10, adding 10 μL of internal standard spiking solution directly to the syringe (Section 10.4). Tabulate peak height or area responses against concentration for each compound and internal standard, and calculate response factors (RF) for each compound using Equation 1.

$$RF = (A_s)(C_{is} (A_{is})(C_s)$$

Equation 1

where:

A_s=Response for the parameter to be measured.
A_{is}=Response for the internal standard.
C_{is}=Concentration of the internal standard
C_s=Concentration of the parameter to be measured.

If the RF value over the working range is a constant (<10% RSD), the RF can be assumed to be invariant and the average RF can be used for calculations. Alternatively, the results can be used to plot a calibration curve of response ratios, A_s/A_{is}, vs. RF.

7.5 The working calibration curve, calibration factor, or RF must be verified on each working day by the measurement of a QC check sample.

7.5.1 Prepare the QC check sample as described in Section 8.2.2.

7.5.2 Analyze the QC check sample according to Section 10.

7.5.3 For each parameter, compare the response (Q) with the corresponding calibration acceptance criteria found in Table 2. If the responses for all parameters of interest fall within the designated ranges, analysis of actual samples can begin. If any individual Q falls outside the range, a new calibration curve, calibration factor, or RF must be prepared for that parameter according to Section 7.3 or 7.4.

8. Quality Control

8.1 Each laboratory that uses this method is required to operate a formal quality control program. The mimimum requirements of this program consist of an initial demonstration of laboratory capability and an ongoing analysis of spiked samples to evaluate and document data quality. The laboratory must maintain records to document the quality of data that is generated. Ongoing data quality checks are compared with established performance criteria to determine if the results of analyses meet the performance characteristics of the method. When results of sample spikes indicate atypical method performance, a quality control check standard must be analyzed to confirm that the measurements were performed in an in-control mode of operation.

8.1.1 The analyst must make an initial, one-time, demonstration of the ability to generate acceptable accuracy and precision with this method. This ability is established as described in Section 8.2.

8.1.2 In recognition of advances that are occurring in chromatography, the analyst is permitted certain options (detailed in Section 10.1) to improve the separations or lower the cost of measurements. Each time such a modification is made to the method, the analyst is required to repeat the procedure in Section 8.2.

8.1.3 Each day, the analyst must analyze a reagent water blank to demonstrate that interferences from the analytical system are under control.

8.1.4 The laboratory must, on an ongoing basis, spike and analyze a minimum of 10% of all samples to monitor and evaluate laboratory data quality. This procedure is described in Section 8.3.

8.1.5 The laboratory must, on an ongoing basis, demonstrate through the analyses of quality control check standards that the operation of the measurement system is in control. This procedure is described in Section 8.4. The frequency of the check standard analyses is equivalent to 10% of all samples analyzed but may be reduced if spike recoveries from samples (Section 8.3) meet all specified quality control criteria.

8.1.6 The laboratory must maintain performance records to document the quality of data that is generated. This procedure is described in Section 8.5.

8.2 To establish the ability to generate acceptable accuracy and precision, the analyst must perform the following operations.

8.2.1 A quality control (QC) check sample concentrate is required containing each parameter of interest at a concentration of 10 μg/mL in methanol. The QC check sample concentrate must be obtained from the U.S. Environmental Protection Agency, Environmental Monitoring and Support Laboratory in Cincinnati, Ohio, if available. If not available from that source, the QC check sample concentrate must be obtained from another external source. If not available from either source above, the QC check sample concentrate must be prepared by the laboratory using stock standards prepared independently from those used for calibration.

8.2.2 Prepare a QC check sample to contain 20 μg/L of each parameter by adding 200 μL of QC check sample concentrate to 100 mL of reagant water.

8.2.3 Analyze four 5-mL aliquots of the well-mixed QC check sample according to Section 10.

8.2.4 Calculate the average recovery ($\bar{X}$) in μg/L, and the standard deviation of the recovery (s) in μg/L, for each parameter of interest using the four results.

8.2.5 For each parameter compare s and $\bar{X}$ with the corresponding acceptance criteria for precision and accuracy, respectively, found in Table 2. If s and $\bar{X}$ for all parameters of interest meet the acceptance criteria, the system performance is acceptable and analysis of actual samples can begin. If any individual s exceeds the precision limit or any individual $\bar{X}$ falls outside the range for accuracy, the system performance is unacceptable for that parameter.

NOTE: The large number of parameters in Table 2 present a substantial probability that one or more will fail at least one of the acceptance criteria when all parameters are analyzed.

8.2.6 When one or more of the parameters tested fail at least one of the acceptance criteria, the analyst must proceed according to Section 8.2.6.1 or 8.2.6.2.

8.2.6.1 Locate and correct the source of the problem and repeat the test for all parameters of interest beginning with Section 8.2.3.

8.2.6.2 Beginning with Section 8.2.3, repeat the test only for those parameters that failed to meet criteria. Repeated failure, however, will confirm a general problem with the measurement system. If this occurs, locate and correct the source of the problem and repeat the test for all compounds of interest beginning with Section 8.2.3.

8.3 The laboratory must, on an ongoing basis, spike at least 10% of the samples from each sample site being monitored to assess accuracy. For laboratories analyzing one to ten samples per month, at least one spiked sample per month is required.

8.3.1 The concentration of the spike in the sample should be determined as follows:

8.3.1.1 If, as in compliance monitoring, the concentration of a specific parameter in the sample is being checked against a regulatory concentration limit, the spike should be at that limit or 1 to 5 times higher than the background concentration determined in Section 8.3.2, whichever concentration would be larger.

8.3.1.2 If the concentration of a specific parameter in the sample is not being checked against a limit specific to that parameter, the spike should be at 20 μg/L or 1 to 5 times higher than the background concentration determined in Section 8.3.2, whichever concentration would be larger.

8.3.2 Analyze one 5-mL sample aliquot to determine the background concentration (B) of each parameter. If necessary, prepare a new QC check sample concentrate (Section 8.2.1) appropriate for the background concentrations in the sample. Spike a second 5-mL sample aliquot with 10 μL of the QC check sample concentrate and analyze it to determine the concentration after spiking (A) of each parameter. Calculate each percent recovery (P) as 100(A−B)%/T, where T is the known true value of the spike.

8.3.3 Compare the percent recovery (P) for each parameter with the corresponding QC acceptance criteria found in Table 2. These acceptance criteria were calculated to include an allowance for error in measurement of both the background and spike concentrations, assuming a spike to background ratio of 5:1. This error will be accounted for to the extent that the analyst's spike to background ratio approaches 5:1.[7] If spiking was performed at a concentration lower than 20 μg/L, the analyst must use either the QC acceptance criteria in Table 2, or optional QC acceptance criteria calculated for the specific spike concentration. To calculate optional acceptance criteria for the recovery of a parameter: (1) Calculate accuracy (X′) using the equation in Table 3, substituting the spike concentration (T) for C; (2) calculate overall precision (S′) using the equation in Table 3, substituting X′ for $\bar{X}$; (3) calculate the range for recovery at the spike concentration as (100 X′/T) ±2.44(100 S′/T)%.[7]

8.3.4 If any individual P falls outside the designated range for recovery, that parameter has failed the acceptance criteria. A check standard containing each parameter that failed the criteria must be analyzed as described in Section 8.4.

8.4 If any parameter fails the acceptance criteria for recovery in Section 8.3, a QC check standard containing each parameter that failed must be prepared and analyzed.

NOTE: The frequency for the required analysis of a QC check standard will depend upon the number of parameters being simultaneously tested, the complexity of the sample matrix, and the performance of the laboratory.

8.4.1 Prepare the QC check standard by adding 10 μL of QC check sample concentrate (Section 8.2.1 or 8.3.2) to 5 mL of reagent water. The QC check standard needs only to contain the parameters that failed criteria in the test in Section 8.3.

8.4.2 Analyze the QC check standard to determine the concentration measured (A) of each parameter. Calculate each percent recovery (P_s) as 100 (A/T)%, where T is the true value of the standard concentration.

8.4.3 Compare the percent recovery (P_s) for each parameter with the corresponding QC acceptance criteria found in Table 2. Only parameters that failed the test in Section 8.3 need to be compared with these criteria. If the recovery of any such parameter falls outside the designated range, the laboratory performance for that parameter is judged to be out of control, and the problem must be immediately identified and corrected. The analytical result for that parameter in the unspiked sample is suspect and may not be reported for regulatory compliance purposes.

8.5 As part of the QC program for the laboratory, method accuracy for wastewater samples must be assessed and records must be maintained. After the analysis of five spiked wastewater samples as in Section 8.3, calculate the average percent recovery ($\bar{P}$)

and the standard deviation of the percent recovery (s_p). Express the accuracy assessment as a percent recovery interval from $\bar{P}-2s_p$ to $\bar{P}+2s_p$. If $\bar{P}$=90% and s_p=10%, for example, the accuracy interval is expressed as 70–110%. Update the accuracy assessment for each parameter on a regular basis (e.g. after each five to ten new accuracy measurements).

8.6 It is recommended that the laboratory adopt additional quality assurance practices for use with this method. The specific practices that are most productive depend upon the needs of the laboratory and the nature of the samples. Field duplicates may be analyzed to assess the precision of the environmental measurements. When doubt exists over the identification of a peak on the chromatogram, confirmatory techniques such as gas chromatography with a dissimilar column, specific element detector, or mass spectrometer must be used. Whenever possible, the laboratory should analyze standard reference materials and participate in relevant performance evaluation studies.

8.7 The analyst should monitor both the performance of the analytical system and the effectiveness of the method in dealing with each sample matrix by spiking each sample, standard, and reagent water blank with surrogate compounds (e.g. α, α, α,-trifluorotoluene) that encompass the range of the temperature program used in this method. From stock standard solutions prepared as in Section 6.6, add a volume to give 750 µg of each surrogate to 45 mL of reagent water contained in a 50-mL volumetric flask, mix and dilute to volume for a concentration of 15 mg/µL. Add 10 µL of this surrogate spiking solution directly into the 5-mL syringe with every sample and reference standard analyzed. Prepare a fresh surrogate spiking solution on a weekly basis. If the internal standard calibration procedure is being used, the surrogate compounds may be added directly to the internal standard spiking solution (Section 7.4.2).

9. Sample Collection, Preservation, and Handling

9.1 The samples must be iced or refrigerated from the time of collection until analysis. If the sample contains free or combined chlorine, add sodium thiosulfate preservative (10 mg/40 mL is sufficient for up to 5 ppm Cl_2) to the empty sample bottle just prior to shipping to the sampling site. EPA Method 330.4 or 330.5 may be used for measurement of residual chlorine.[8] Field test kits are available for this purpose.

9.2 Collect about 500 mL of sample in a clean container. Adjust the pH of the sample to about 2 by adding 1+1 HCl while stirring. Fill the sample bottle in such a manner that no air bubbles pass through the sample as the bottle is being filled. Seal the bottle so that no air bubbles are entrapped in it. Maintain the hermetic seal on the sample bottle until time of analysis.

9.3 All samples must be analyzed within 14 days of collection.[3]

10. Procedure

10.1 Table 1 summarizes the recommended operating conditions for the gas chromatograph. Included in this table are estimated retention times and MDL that can be achieved under these conditions. An example of the separations achieved by Column 1 is shown in Figure 6. Other packed columns, chromatographic conditions, or detectors may be used if the requirements of Section 8.2 are met.

10.2 Calibrate the system daily as described in Section 7.

10.3 Adjust the purge gas (nitrogen or helium) flow rate to 40 mL/min. Attach the trap inlet to the purging device, and set the purge and trap system to purge (Figure 3). Open the syringe valve located on the purging device sample introduction needle.

10.4 Allow the sample to come to ambient temperature prior to introducing it to the syringe. Remove the plunger from a 5-mL syringe and attach a closed syringe valve. Open the sample bottle (or standard) and carefully pour the sample into the syringe barrel to just short of overflowing. Replace the syringe plunger and compress the sample. Open the syringe valve and vent any residual air while adjusting the sample volume to 5.0 mL. Since this process of taking an aliquot destroys the validity of the sample for future analysis, the analyst should fill a second syringe at this time to protect against possible loss of data. Add 10.0 µL of the surrogate spiking solution (Section 8.7) and 10.0 µL of the internal standard spiking solution (Section 7.4.2), if applicable, through the valve bore, then close the valve.

10.5 Attach the syringe-syringe valve assembly to the syringe valve on the purging device. Open the syringe valves and inject the sample into the purging chamber.

10.6 Close both valves and purge the sample for 12.0 ±0.1 min at ambient temperature.

10.7 After the 12-min purge time, disconnect the purging device from the trap. Dry the trap by maintaining a flow of 40 mL/min of dry purge gas through it for 6 min (Figure 4). If the purging device has no provision for bypassing the purger for this step, a dry purger should be inserted into the device to minimize moisture in the gas. Attach the trap to the chromatograph, adjust the purge and trap system to the desorb mode (Figure 5), and begin to temperature program the gas chromatograph. Introduce the trapped materials to the GC column by rapidly heating the trap to 180 °C while backflushing the trap with an inert gas between 20 and 60 mL/min for 4 min. If rapid heating of the trap cannot be achieved, the GC column must be used as a secondary trap by cooling it to 30 °C (subambient temperature, if poor peak geometry and random retention time problems persist) instead of the initial program temperature of 50 °C.

10.8 While the trap is being desorbed into the gas chromatograph column, empty the purging chamber using the sample introduction syringe. Wash the chamber with two 5-mL flushes of reagent water.

10.9 After desorbing the sample for 4 min, recondition the trap by returning the purge and trap system to the purge mode. Wait 15 s, then close the syringe valve on the purging device to begin gas flow through the trap. The trap temperature should be maintained at 180 °C. After approximately 7 min, turn off the trap heater and open the syringe valve to stop the gas flow through the trap. When the trap is cool, the next sample can be analyzed.

10.10 Identify the parameters in the sample by comparing the retention times of the peaks in the sample chromatogram with those of the peaks in standard chromatograms. The width of the retention time window used to make identifications should be based upon measurements of actual retention time variations of standards over the course of a day. Three times the standard deviation of a retention time for a compound can be used to calculate a suggested window size; however, the experience of the analyst should weigh heavily in the interpretation of chromatograms.

10.11 If the response for a peak exceeds the working range of the system, prepare a dilution of the sample with reagent water from the aliquot in the second syringe and reanalyze.

11. Calculations

11.1 Determine the concentration of individual compounds in the sample.

11.1.1 If the external standard calibration procedure is used, calculate the concentration of the parameter being measured from the peak response using the calibration curve or calibration factor determined in Section 7.3.2.

11.1.2 If the internal standard calibration procedure is used, calculate the concentration in the sample using the response factor (RF) determined in Section 7.4.3 and Equation 2.

$$\text{Concentration } (\mu\text{g/L}) = \frac{(A_s)(C_{is})}{(A_{is})(RF)}$$

Equation 2

where:

A_s = Response for the parameter to be measured.

A_{is} = Response for the internal standard.

C_{is} = Concentration of the internal standard.

11.2 Report results in μg/L without correction for recovery data. All QC data obtained should be reported with the sample results.

12. Method Performance

12.1 The method detection limit (MDL) is defined as the minimum concentration of a substance that can be measured and reported with 99% confidence that the value is above zero.[1] The MDL concentrations listed in Table 1 were obtained using reagent water.[9] Similar results were achieved using representative wastewaters. The MDL actually achieved in a given analysis will vary depending on instrument sensitivity and matrix effects.

12.2 This method has been demonstrated to be applicable for the concentration range from the MDL to 100 × MDL.[9] Direct aqueous injection techniques should be used to measure concentration levels above 1000 × MDL.

12.3 This method was tested by 20 laboratories using reagent water, drinking water, surface water, and three industrial wastewaters spiked at six concentrations over the range 2.1 to 550 μg/L.[9] Single operator precision, overall precision, and method accuracy were found to be directly related to the concentration of the parameter and essentially independent of the sample matrix. Linear equations to describe these relationships are presented in Table 3.

References

1. 40 CFR part 136, appendix B.

2. Lichtenberg, J.J. ''Determining Volatile Organics at Microgram-per-Litre-Levels by Gas Chromatography,'' Journal American Water Works Association, *66*, 739 (1974).

3. Bellar, T.A., and Lichtenberg, J.J. ''Semi-Automated Headspace Analysis of Drinking Waters and Industrial Waters for Purgeable Volatile Organic Compounds,'' Proceedings of Symposium on Measurement of Organic Pollutants in Water and Wastewater. American Society for Testing and Materials, STP 686, C.E. Van Hall, editor, 1978.

4. ''Carcinogens—Working with Carcinogens,'' Department of Health, Education, and Welfare, Public Health Service, Center for Disease Control, National Institute for Occupational Safety and Health. Publication No. 77–206, August 1977.

5. ''OSHA Safety and Health Standards, General Industry,'' (29 CFR part 1910), Occupational Safety and Health Administration, OSHA 2206 (Revised, January 1976).

6. ''Safety in Academic Chemistry Laboratories,'' American Chemical Society Publication, Committee on Safety, 3rd Edition, 1979.

7. Provost, L.P., and Elder, R.S. ''Interpretation of Percent Recovery Data,'' *American Laboratory, 15*, 58-63 (1983). (The value 2.44 used in the equation in Section 8.3.3. is two times the value 1.22 derived in this report.)

8. "Methods 330.4 (Titrimetric, DPD-FAS) and 330.5 (Spectrophotometric, DPD) for Chlorine, Total Residual," Methods for Chemical Analysis of Water and Wastes, EPA–600/4–79–020, U.S. Environmental Protection Agency, Office of Research and Development, Environmental Monitoring and Support Laboratory, Cincinnati, Ohio 45268. March 1979.

9. "EPA Method Study 25, Method 602, Purgeable Aromatics," EPA 600/4–84–042, National Technical Information Service, PB84–196682, Springfield, Virginia 22161, May 1984.

TABLE 1—CHROMATOGRAPHIC CONDITIONS AND METHOD DETECTION LIMITS

Parameter	Retention time (min)		Method detection limit (µg/L)
	Column 1	Column 2	
Benzene	3.33	2.75	0.2
Toluene	5.75	4.25	0.2
Ethylbenzene	8.25	6.25	0.2
Chlorobenzene	9.17	8.02	0.2
1,4-Dichlorobenzene	16.8	16.2	0.3
1,3-Dichlorobenzene	18.2	15.0	0.4
1,2-Dichlorobenzene	25.9	19.4	0.4

Column 1 conditions: Supelcoport (100/120 mesh) coated with 5% SP–1200/1.75% Bentone-34 packed in a 6 ft × 0.085 in. ID stainless steel column with helium carrier gas at 36 mL/min flow rate. Column temperature held at 50 °C for 2 min then programmed at 6 °C/min to 90 °C for a final hold.

Column 2 conditions: Chromosorb W-AW (60/80 mesh) coated with 5% 1,2,3-Tris(2-cyanoethyoxy)propane packed in a 6 ft × 0.085 in. ID stainless steel column with helium carrier gas at 30 mL/min flow rate. Column temperature held at 40 °C for 2 min then programmed at 2 °C/min to 100 °C for a final hold.

TABLE 2—CALIBRATION AND QC ACCEPTANCE CRITERIA—METHOD 602 [A]

Parameter	Range for Q (µg/L)	Limit for s (µg/L)	Range for $\bar{X}$ (µg/L)	Range for P, P_s(%)
Benzene	15.4–24.6	4.1	10.0–27.9	39–150
Chlorobenzene	16.1–23.9	3.5	12.7–25.4	55–135
1,2-Dichlorobenzene	13.6–26.4	5.8	10.6–27.6	37–154
1,3-Dichlorobenzene	14.5–25.5	5.0	12.8–25.5	50–141
1,4-Dichlorobenzene	13.9–26.1	5.5	11.6–25.5	42–143
Ethylbenzene	12.6–27.4	6.7	10.0–28.2	32–160
Toluene	15.5–24.5	4.0	11.2–27.7	46–148

Q=Concentration measured in QC check sample, in µg/L (Section 7.5.3).
s=Standard deviation of four recovery measurements, in µg/L (Section 8.2.4).
$\bar{X}$=Average recovery for four recovery measurements, in µg/L (Section 8.2.4).
P_s, P=Percent recovery measured (Section 8.3.2, Section 8.4.2).
[a] Criteria were calculated assuming a QC check sample concentration of 20 µg/L.

Note: These criteria are based directly upon the method performance data in Table 3. Where necessary, the limits for recovery have been broadened to assure applicability of the limits to concentrations below those used to develop Table 3.

TABLE 3—METHOD ACCURACY AND PRECISION AS FUNCTIONS OF CONCENTRATION—METHOD 602

Parameter	Accuracy, as recovery, X′ (µg/L)	Single analyst precision, s′ (µg/L)	Overall precision, S′ (µg/L)
Benzene	0.92C+0.57	$0.09\bar{X}+0.59$	$0.21\bar{X}+0.56$
Chlorobenzene	0.95C+0.02	$0.09\bar{X}+0.23$	$0.17\bar{X}+0.10$
1,2-Dichlorobenzene	0.93C+0.52	$0.17\bar{X}-0.04$	$0.22\bar{X}+0.53$
1,3-Dichlorobenzene	0.96C−0.05	$0.15\bar{X}-0.10$	$0.19\bar{X}+0.09$
1,4-Dichlorobenzene	0.93C−0.09	$0.15\bar{X}+0.28$	$0.20\bar{X}+0.41$
Ethylbenzene	0.94C+0.31	$0.17\bar{X}+0.46$	$0.26\bar{X}+0.23$
Toluene	0.94C+0.65	$0.09\bar{X}+0.48$	$0.18\bar{X}+0.71$

X′=Expected recovery for one or more measurements of a sample containing a concentration of C, in µg/L.
S′=Expected single analyst standard deviation of measurements at an average concentration found of $\bar{X}$, in X µg/L.
S′=Expected interlaboratory standard deviation of measurements at an average concentration found of $\bar{X}$, in µg/L.
C=True value for the Concentration, in µg/L.
$\bar{X}$=Average recovery found for measurements of samples containing a concentration of C, in µg/L.

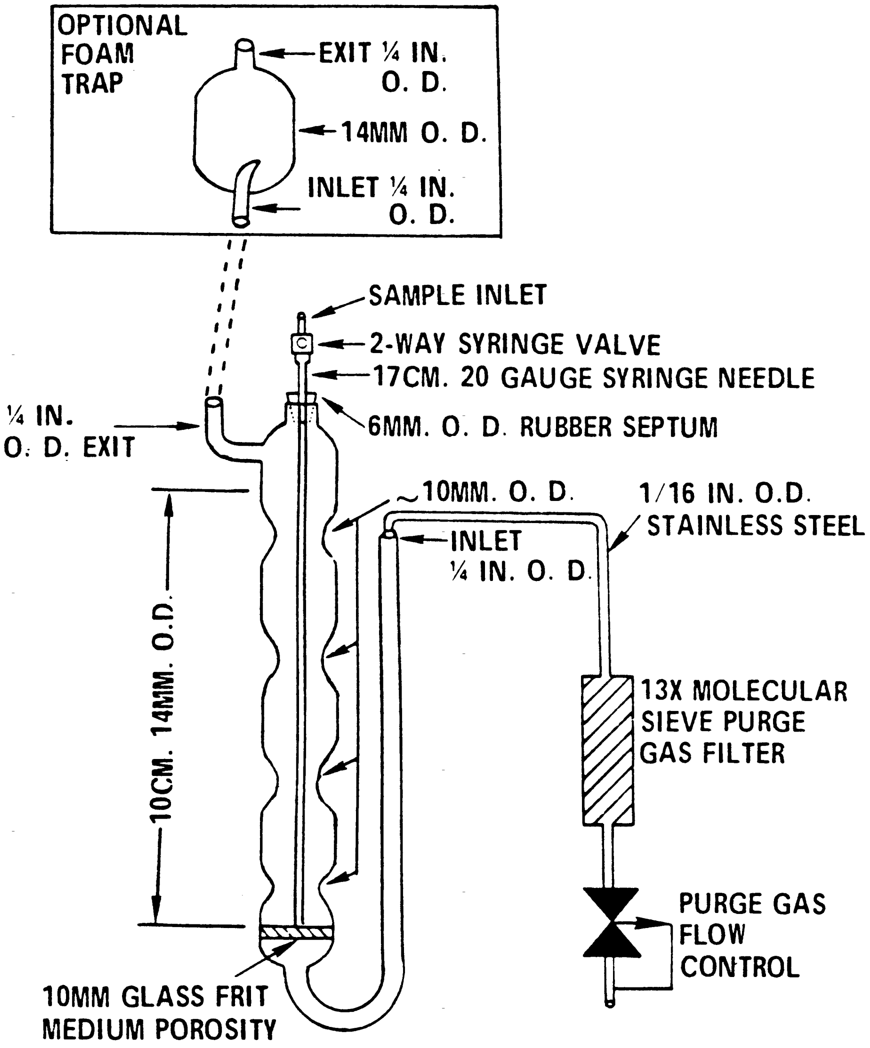

Figure 1. Purging device.

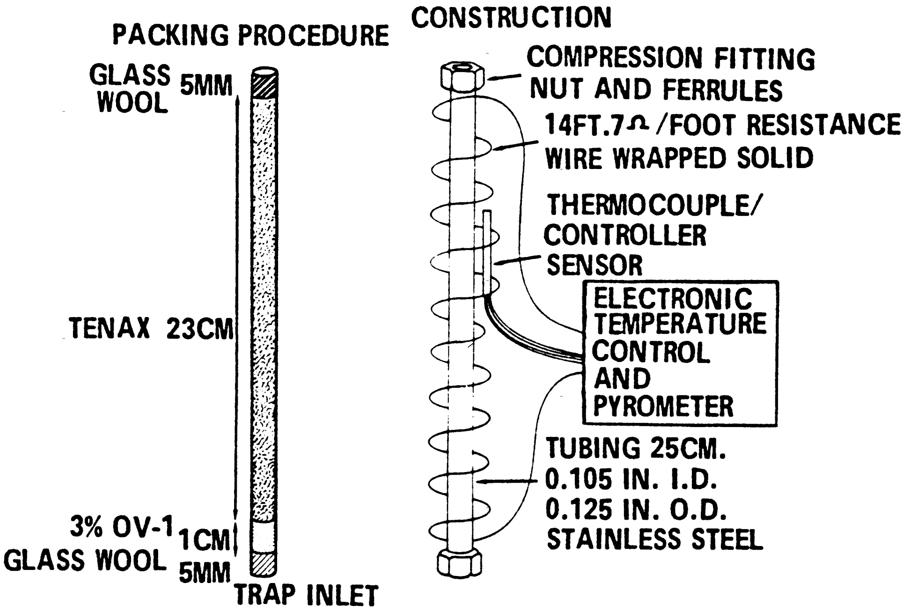

Figure 2. Trap packings and construction to include desorb capability.

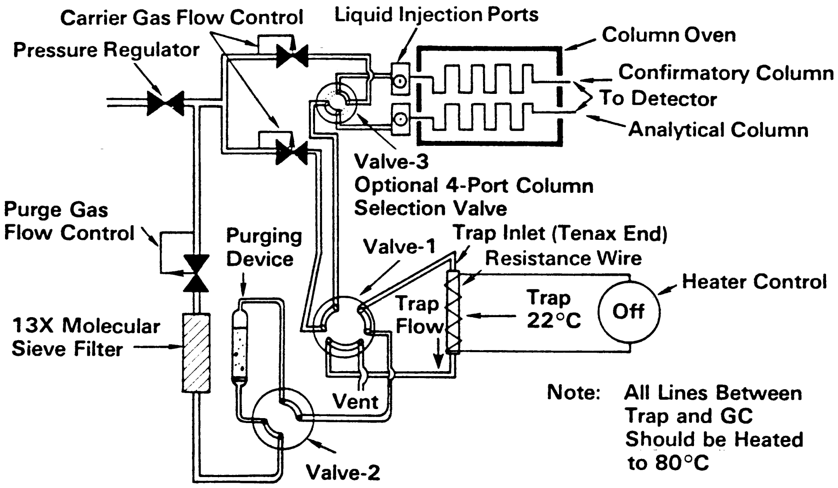

Figure 3. Purge and trap system - purge mode.

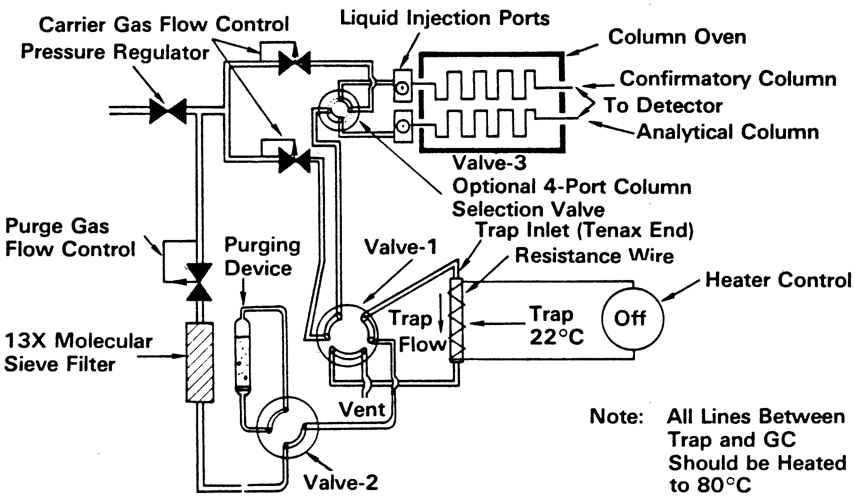

Figure 4. Purge and trap system-dry mode.

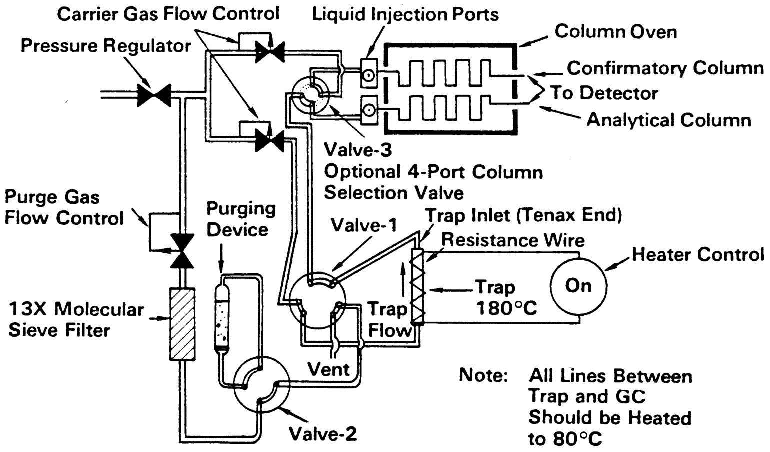

Figure 5. Purge and trap system-desorb mode.

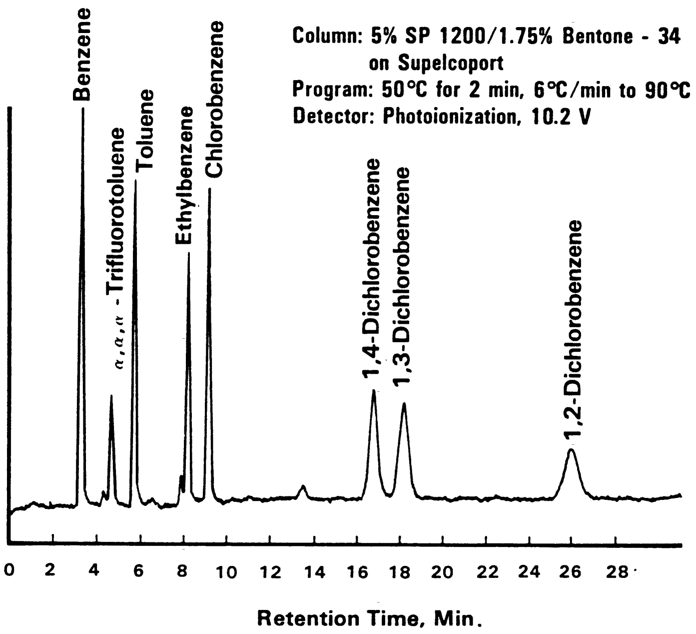

Figure 6. Gas chromatogram of purgeable aromatics.

METHOD 603—ACROLEIN AND ACRYLONITRILE

1. Scope and Application

1.1 This method covers the determination of acrolein and acrylonitrile. The following parameters may be determined by this method:

Parameter	STORET No.	CAS No.
Acrolein	34210	107–02–8
Acrylonitrile	34215	107–13–1

1.2 This is a purge and trap gas chromatographic (GC) method applicable to the determination of the compounds listed above in municipal and industrial discharges as provided under 40 CFR 136.1. When this method is used to analyze unfamiliar samples for either or both of the compounds above, compound identifications should be supported by at least one additional qualitative technique. This method describes analytical conditions for a second gas chromatographic column that can be used to confirm measurements made with the primary column. Method 624 provides gas chromatograph/mass spectrometer (GC/MS) conditions appropriate for the qualitative and quantitative confirmation of results for the parameters listed above, if used with the purge and trap conditions described in this method.

1.3 The method detection limit (MDL, defined in Section 12.1)[1] for each parameter is listed in Table 1. The MDL for a specific wastewater may differ from those listed, depending upon the nature of interferences in the sample matrix.

1.4 Any modification of this method, beyond those expressly permitted, shall be considered as a major modification subject to application and approval of alternate test procedures under 40 CFR 136.4 and 136.5.

1.5 This method is restricted to use by or under the supervision of analysts experienced in the operation of a purge and trap system and a gas chromatograph and in the interpretation of gas chromatograms. Each analyst must demonstrate the ability to generate acceptable results with this method using the procedure described in Section 8.2.

2. Summary of Method

2.1 An inert gas is bubbled through a 5-mL water sample contained in a heated purging chamber. Acrolein and acrylonitrile are transferred from the aqueous phase to the vapor phase. The vapor is swept through a sorbent trap where the analytes are trapped. After the purge is completed, the trap is heated and backflushed with the inert gas to desorb the compound onto a gas chromatographic column. The gas chromatograph is temperature programmed to separate the analytes which are then detected with a flame ionization detector.[2,3]

2.2 The method provides an optional gas chromatographic column that may be helpful in resolving the compounds of interest from the interferences that may occur.

3. Interferences

3.1 Impurities in the purge gas and organic compound outgassing from the plumbing of the trap account for the majority of contamination problems. The analytical system must be demonstrated to be free from contamination under the conditions of the analysis by running laboratory reagent blanks as described in Section 8.1.3. The use of non-Teflon plastic tubing, non-Teflon thread sealants, or flow controllers with rubber components in the purge and trap system should be avoided.

3.2 Samples can be contaminated by diffusion of volatile organics through the septum seal into the sample during shipment and storage. A field reagent blank prepared from reagent water and carried through the sampling and handling protocol can serve as a check on such contamination.

3.3 Contamination by carry-over can occur whenever high level and low level samples are sequentially analyzed. To reduce carry-over, the purging device and sample syringe must be rinsed between samples with reagent water. Whenever an unusually concentrated sample is encountered, it should be followed by an analysis of reagent water to check for cross contamination. For samples containing large amounts of water-soluble materials, suspended solids, high boiling compounds or high analyte levels, it may be necessary to wash the purging device with a detergent solution, rinse it with distilled water, and then dry it in an oven at 105 °C between analyses. The trap and other parts of the system are also subject to contamination, therefore, frequent bakeout and purging of the entire system may be required.

4. Safety

4.1 The toxicity or carcinogenicity of each reagent used in this method has not been precisely defined; however, each chemical compound should be treated as a potential health hazard. From this view point, exposure to these chemicals must be reduced to the lowest possible level by whatever means available. The laboratory is responsible for maintaining a current awareness file of OSHA regulations regarding the safe handling of the chemicals specified in this method. A reference file of material data handling sheets should also be made available to all personnel involved in the chemical analysis. Additional references to laboratory safety are available and have been identified[4,6] for the information of the analyst.

5. Apparatus and Materials

5.1 Sampling equipment, for discrete sampling.

5.1.1 Vial—25-mL capacity or larger, equipped with a screw cap with a hole in the center (Pierce #13075 or equivalent). Detergent wash, rinse with tap and distilled water, and dry at 105 °C before use.

5.1.2 Septum—Teflon-faced silicone (Pierce #12722 or equivalent). Detergent wash, rinse with tap and distilled water and dry at 105 °C for 1 h before use.

5.2 Purge and trap system—The purge and trap system consists of three separate pieces of equipment: a purging device, trap, and desorber. Several complete systems are now commercially available.

5.2.1 The purging device must be designed to accept 5-mL, samples with a water column at least 3 cm deep. The gaseous head space between the water column and the trap must have a total volume of less than 15 mL. The purge gas must pass through the water column as finely divided bubbles with a diameter of less than 3 mm at the origin. The purge gas must be introduced no more than 5 mm from the base of the water column. The purging device must be capable of being heated to 85 °C within 3.0 min after transfer of the sample to the purging device and being held at 85 ±2 °C during the purge cycle. The entire water column in the purging device must be heated. Design of this modification to the standard purging device is optional, however, use of a water bath is suggested.

5.2.1.1 Heating mantle—To be used to heat water bath.

5.2.1.2 Temperature controller—Equipped with thermocouple/sensor to accurately control water bath temperature to ±2 °C. The purging device illustrated in Figure 1 meets these design criteria.

5.2.2 The trap must be at least 25 cm long and have an inside diameter of at least 0.105 in. The trap must be packed to contain 1.0 cm of methyl silicone coated packing (Section 6.5.2) and 23 cm of 2,6-diphenylene oxide polymer (Section 6.5.1). The minimum specifications for the trap are illustrated in Figure 2.

5.2.3 The desorber must be capable of rapidly heating the trap to 180 °C, The desorber illustrated in Figure 2 meets these design criteria.

5.2.4 The purge and trap system may be assembled as a separate unit as illustrated in Figure 3 or be coupled to a gas chromatograph.

5.3 pH paper—Narrow pH range, about 3.5 to 5.5 (Fisher Scientific Short Range Alkacid No. 2, #14–837–2 or equivalent).

5.4 Gas chromatograph—An analytical system complete with a temperature programmable gas chromatograph suitable for on-column injection and all required accessories including syringes, analytical columns, gases, detector, and strip-chart recorder. A data system is recommended for measuring peak areas.

5.4.1 Column 1—10 ft long × 2 mm ID glass or stainless steel, packed with Porapak-QS (80/100 mesh) or equivalent. This column was used to develop the method performance statements in Section 12. Guidelines for the use of alternate column packings are provided in Section 10.1.

5.4.2 Column 2—6 ft long × 0.1 in. ID glass or stainless steel, packed with Chromosorb 101 (60/80 mesh) or equivalent.

5.4.3 Detector—Flame ionization detector. This type of detector has proven effective in the analysis of wastewaters for the parameters listed in the scope (Section 1.1), and was used to develop the method performance statements in Section 12. Guidelines for the use of alternate detectors are provided in Section 10.1.

5.5 Syringes—5-mL, glass hypodermic with Luerlok tip (two each).

5.6 Micro syringes—25-µL, 0.006 in. ID needle.

5.7 Syringe valve—2-way, with Luer ends (three each).

5.8 Bottle—15-mL, screw-cap, with Teflon cap liner.

5.9 Balance—Analytical, capable of accurately weighing 0.0001 g.

6. Reagents

6.1 Reagent water—Reagent water is defined as a water in which an interferent is not observed at the MDL of the parameters of interest.

6.1.1 Reagent water can be generated by passing tap water through a carbon filter bed containing about 1 lb of activated carbon (Filtrasorb-300, Calgon Corp., or equivalent).

6.1.2 A water purification system (Millipore Super-Q or equivalent) may be used to generate reagent water.

6.1.3 Regent water may also be prepared by boiling water for 15 min. Subsequently, while maintaining the temperature at 90 °C, bubble a contaminant-free inert gas through the water for 1 h. While still hot, transfer the water to a narrow mouth screw-cap bottle and seal with a Teflon-lined septum and cap.

6.2 Sodium thiosulfate—(ACS) Granular.

6.3 Sodium hydroxide solution (10 N)—Dissolve 40 g of NaOH (ACS) in reagent water and dilute to 100 mL.

6.4 Hydrochloric acid (1+1)—Slowly, add 50 mL of concentrated HCl (ACS) to 50 mL of reagent water.

6.5 Trap Materials:

6.5.1 2,6-Diphenylene oxide polymer—Tenax (60/80 mesh), chromatographic grade or equivalent.

6.5.2 Methyl silicone packing—3% OV–1 on Chromosorb-W (60/80 mesh) or equivalent.

6.6 Stock standard solutions—Stock standard solutions may be prepared from pure standard materials or purchased as certified solutions. Prepare stock standard solutions in reagent water using assayed liquids. Since acrolein and acrylonitrile are lachrymators, primary dilutions of these compounds should be prepared in a hood. A NIOSH/MESA approved toxic gas respirator should be used when the analyst handles high concentrations of such materials.

6.6.1 Place about 9.8 mL of reagent water into a 10-mL ground glass stoppered volumetric flask. For acrolein standards the reagent water must be adjusted to pH 4 to 5. Weight the flask to the nearest 0.1 mg.

6.6.2 Using a 100-µL syringe, immediately add two or more drops of assayed reference material to the flask, then reweigh. Be sure that the drops fall directly into the water without contacting the neck of the flask.

6.6.3 Reweigh, dilute to volume, stopper, then mix by inverting the flask several times. Calculate the concentration in µg/µL from the net gain in weight. When compound purity is assayed to be 96% or greater, the weight can be used without correction to calculate the concentration of the stock staldard. Optionally, stock standard solutions may be prepared using the pure standard material by volumetrically measuring the appropriate amounts and determining the weight of the material using the density of the material. Commercially prepared stock standards may be used at any concentration if they are certified by the manufactaurer or by an independent source.

6.6.4 Transfer the stock standard solution into a Teflon-sealed screw-cap bottle. Store at 4 °C and protect from light.

6.6.5 Prepare fresh standards daily.

6.7 Secondary dilution standards—Using stock standard solutions, prepare secondary dilution standards in reagent water that contain the compounds of interest, either singly or mixed together. The secondary dilution standards should be prepared at concentrations such that the aqueous calibration standards prepared in Section 7.3.1 or 7.4.1 will bracket the working range of the analytical system. Secondary dilution standards should be prepared daily and stored at 4 °C.

6.8 Quality control check sample concentrate—See Section 8.2.1.

7. Calibration

7.1 Assemble a purge and trap system that meets the specifications in Section 5.2. Condition the trap overnight at 180 °C by backflushing with an inert gas flow of at least 20 mL/min. Condition the trap for 10 min once daily prior to use.

7.2 Connect the purge and trap system to a gas chromatograph. The gas chromatograph must be operated using temperature and flow rate conditions equivalent to those given in Table 1. Calibrate the purge and trap-gas chromatographic system using either the external standard technique (Section 7.3) or the internal standard technique (Section 7.4).

7.3 External standard calibration procedure:

7.3.1 Prepare calibration standards at a minimum of three concentration levels for each parameter by carefully adding 20.0 µL of one or more secondary dilution standards to 100, 500, or 1000 mL of reagent water. A 25-µL syringe with a 0.006 in. ID needle should be used for this operation. One of the external standards should be at a concentration near, but above, the MDL and the other concentrations should correspond to the expected range of concentrations found in real samples or should define the working range of the detector. These standards must be prepared fresh daily.

7.3.2 Analyze each calibration standard according to Section 10, and tabulate peak height or area responses versus the concentration of the standard. The results can be used to prepare a calibration curve for each compound. Alternatively, if the ratio of response to concentration (calibration factor) is a constant over the working range (< 10% relative standard deviation, RSD), linearity through the origin can be assumed and the average ratio or calibration factor can be used in place of a calibration curve.

7.4 Internal standard calibration procedure—To use this approach, the analyst must select one or more internal standards that are similar in analytical behavior to the compounds of interest. The analyst must further demonstrate that the measurement of the internal standard is not affected by method or matrix interferences. Because of these limitations, no internal standard can be suggested that is applicable to all samples.

7.4.1 Prepare calibration standards at a minimum of three concentration levels for each parameter of interest as described in Section 7.3.1.

7.4.2 Prepare a spiking solution containing each of the internal standards using the procedures described in Sections 6.6 and 6.7. It is recommended that the secondary dilution standard be prepared at a concentration of 15 µg/mL of each internal standard compound. The addition of 10 µL of this standard to 5.0 mL of sample or calibration standard would be equivalent to 30 µg/L.

7.4.3 Analyze each calibration standard according to Section 10, adding 10 µL of internal standard spiking solution directly to the syringe (Section 10.4). Tabulate peak height or area responses against concentration for each compound and internal standard, and calculate response factors (RF) for each compound using Equation 1.

$$RF = (A_s)(C_{is} (A_{is})(C_s)$$

Equation 1

where:

A_s=Response for the parameter to be measured.
A_{is}=Response for the internal standard.
C_{is}=Concentration of the internal standard.
C_s=Concentration of the parameter to be measured.

If the RF value over the working range is a constant (<10% RSD), the RF can be assumed to be invariant and the average RF can be used for calculations. Alternatively, the results can be used to plot a calibration curve of response ratios, A_s/A_{is}, vs. RF.

7.5 The working calibration curve, calibration factor, or RF must be verified on each working day by the measurement of a QC check sample.

7.5.1 Prepare the QC check sample as described in Section 8.2.2.

7.5.2 Analyze the QC check sample according to Section 10.

7.5.3 For each parameter, compare the response (Q) with the corresponding calibration acceptance criteria found in Table 2. If the responses for all parameters of interest fall within the designated ranges, analysis of actual samples can begin. If any individual Q falls outside the range, a new calibration curve, calibration factor, or RF must be prepared for that parameter according to Section 7.3 or 7.4.

8. Quality Control

8.1 Each laboratory that uses this method is required to operate a formal quality control program. The minimum requirements of this program consist of an initial demonstration of laboratory capability and an ongoing analysis of spiked samples to evaluate and document data quality. The laboratory must maintain records to document the quality of data that is generated. Ongoing data quality checks are compared with established performance criteria to determine if the results of analyses meet the performance characteristics of the method. When results of sample spikes indicate atypical method performance, a quality control check standard must be analyzed to confirm that the measurements were performed in an in-control mode of operation.

8.1.1 The analyst must make an initial, one-time, demonstration of the ability to generate acceptable accuracy and precision with this method. This ability is established as described in Section 8.2.

8.1.2 In recognition of advances that are occurring in chromatography, the analyst is permitted certain options (detailed in Section 10.1) to improve the separations or lower the cost of measurements. Each time such a modification is made to the method, the analyst is required to repeat the procedure in Section 8.2.

8.1.3 Each day, the analyst must analyze a reagent water blank to demonstrate that interferences from the analytical system are under control.

8.1.4 The laboratory must, on an ongoing basis, spike and analyze a minimum of 10% of all samples to monitor and evaluate laboratory data quality. This procedure is described in Section 8.3.

8.1.5 The laboratory must, on an ongoing basis, demonstrate through the analyses of quality control check standards that the operation of the measurement system is in control. This procedure is described in Section 8.4. The frequency of the check standard analyses is equivalent to 10% of all samples analyzed but may be reduced if spike recoveries from samples (Section 8.3) meet all specified quality control criteria.

8.1.6 The laboratory must maintain performance records to document the quality of data that is generated. This procedure is described in Section 8.5.

8.2 To establish the ability to generate acceptable accuracy and precision, the analyst must perform the following operations.

8.2.1 A quality control (QC) check sample concentrate is required containing each parameter of interest at a concentration of 25 μg/mL in reagent water. The QC check sample concentrate must be obtained from the U.S. Environmental Protection Agency, Environmental Monitoring and Support Laboratory in Cincinnati, Ohio, if available. If not available from that source, the QC check sample concentrate must be obtained from another external source. If not available from either source above, the QC check sample concentrate must be prepared by the laboratory using stock standards prepared independently from those used for calibration.

8.2.2 Prepare a QC check sample to contain 50 μg/L of each parameter by adding 200 μL of QC check sample concentrate to 100 mL of reagent water.

8.2.3 Analyze four 5-mL aliquots of the well-mixed QC check sample according to Section 10.

8.2.4 Calculate the average recovery ($\bar{X}$) in μg/L, and the standard deviation of the recovery (s) in μg/L, for each parameter using the four results.

8.2.5 For each parameter compare s and $\bar{X}$ with the corresponding acceptance criteria for precision and accuracy, respectively, found in Table 3. If s and $\bar{X}$ for all parameters of interest meet the acceptance criteria, the system performance is acceptable and analysis of actual samples can begin. If either s exceeds the precision limit or $\bar{X}$ falls outside the range for accuracy, the system performance is unacceptable for that parameter. Locate and correct the source of the problem and repeat the test for each compound of interest.

8.3 The laboratory must, on an ongoing basis, spike at least 10% of the samples from each sample site being monitored to assess accuracy. For laboratories analyzing one to ten samples per month, at least one spiked sample per month is required.

8.3.1 The concentration of the spike in the sample should be determined as follows:

8.3.1.1 If, as in compliance monitoring, the concentration of a specific parameter in the sample is being checked against a regulatory concentration limit, the spike should be at that limit or 1 to 5 times higher than the background concentration determined in Section 8.3.2, whichever concentration would be larger.

8.3.1.2 If the concentration of a specific parameter in the sample is not being checked against a limit specific to that parameter, the spike should be at 50 µg/L or 1 to 5 times higher than the background concentration determined in Section 8.3.2, whichever concentration would be larger.

8.3.2 Analyze one 5-mL sample aliquot to determine the background concentration (B) of each parameter. If necessary, prepare a new QC check sample concentrate (Section 8.2.1) appropriate for the background concentrations in the sample. Spike a second 5-mL sample aliquot with 10 µL of the QC check sample concentrate and analyze it to determine the concentration after spiking (A) of each parameter. Calculate each percent recovery (P) as $100(A-B)\%/T$, where T is the known true value of the spike.

8.3.3 Compare the percent recovery (P) for each parameter with the corresponding QC acceptance criteria found in Table 3. These acceptance criteria were calculated to include an allowance for error in measurement of both the background and spike concentrations, assuming a spike to background ratio of 5:1. This error will be accounted for to the extent that the analyst's spike to background ratio approaches 5:1.[7]

8.3.4 If any individual P falls outside the designated range for recovery, that parameter has failed the acceptance criteria. A check standard containing each parameter that failed the criteria must be analyzed as described in Section 8.4.

8.4 If any parameter fails the acceptance criteria for recovery in Section 8.3, a QC check standard containing each parameter that failed must be prepared and analyzed.

NOTE: The frequency for the required analysis of a QC check standard will depend upon the number of parameters being simultaneously tested, the complexity of the sample matrix, and the performance of the laboratory.

8.4.1 Prepare the QC check standard by adding 10 µL of QC check sample concentrate (Section 8.2.1 or 8.3.2) to 5 mL of reagent water. The QC check standard needs only to contain the parameters that failed criteria in the test in Section 8.3.

8.4.2 Analyze the QC check standard to determine the concentration measured (A) of each parameter. Calculate each percent recovery (P_s) as 100 (A/T)%, where T is the true value of the standard concentration.

8.4.3 Compare the percent recovery (P_s) for each parameter with the corresponding QC acceptance criteria found in Table 3. Only parameters that failed the test in Section 8.3 need to be compared with these criteria. If the recovery of any such parameter falls outside the designated range, the laboratory performance for that parameter is judged to be out of control, and the problem must be immediately identified and corrected. The analytical result for that parameter in the unspiked sample is suspect and may not be reported for regulatory compliance purposes.

8.5 As part of the QC program for the laboratory, method accuracy for wastewater samples must be assessed and records must be maintained. After the analysis of five spiked wastewater samples as in Section 8.3, calculate the average percent recovery ($\bar{P}$) and the standard deviation of the percent recovery (s_p). Express the accuracy assessment as a percent recovery interval from $\bar{P}-2s_p$ to $\bar{P}+2s_p$. If $\bar{P}$=90% and s_p=10%, for example, the accuracy interval is expressed as 70–110%. Update the accuracy assessment for each parameter on a regular basis (e.g. after each five to ten new accuracy measurements).

8.6 It is recommended that the laboratory adopt additional quality assurance practices for use with this method. The specific practices that are most productive depend upon the needs of the laboratory and the nature of the samples. Field duplicates may be analyzed to assess the precision of the environmental measurements. When doubt exists over the identification of a peak on the chromatogram, confirmatory techniques such as gas chromatography with a dissimilar column or mass spectrometer must be used. Whenever possible, the laboratory should analyze standard reference materials and participate in relevant performance evaluation studies.

9. Sample Collection, Preservation, and Handling

9.1 All samples must be iced or refrigerated from the time of collection until analysis. If the sample contains free or combined chlorine, add sodium thiosulfate preservative (10 mg/40 mL is sufficient for up to 5 ppm Cl_2) to the empty sample bottle just prior to shipping to the sampling site. EPA Methods 330.4 and 330.5 may be used for measurement of residual chlorine.[8] Field test kits are available for this purpose.

9.2 If acrolein is to be analyzed, collect about 500 mL of sample in a clean glass container. Adjust the pH of the sample to 4 to 5 using acid or base, measuring with narrow range pH paper. Samples for acrolein analysis receiving no pH adjustment must be analyzed within 3 days of sampling.

9.3 Grab samples must be collected in glass containers having a total volume of at least 25 mL. Fill the sample bottle just to overflowing in such a manner that no air bubbles pass through the sample as the bottle is being filled. Seal the bottle so that no air bubbles are entrapped in it. If preservative has been added, shake vigorously for 1 min. Maintain the hermetic seal on the sample bottle until time of analysis.

9.4 All samples must be analyzed within 14 days of collection.[3]

10. Procedure

10.1 Table 1 summarizes the recommended operating conditions for the gas chromatograph. Included in this table are estimated retention times and MDL that can be achieved under these conditions. An example of the separations achieved by Column 1 is shown in Figure 5. Other packed columns, chromatographic conditions, or detectors may be used if the requirements of Section 8.2 are met.

10.2 Calibrate the system daily as described in Section 7.

10.3 Adjust the purge gas (nitrogen or helium) flow rate to 20 mL-min. Attach the trap inlet to the purging device, and set the purge and trap system to purge (Figure 3). Open the syringe valve located on the purging device sample introduction needle.

10.4 Remove the plunger from a 5-mL syringe and attach a closed syringe valve. Open the sample bottle (or standard) and carefully pour the sample into the syringe barrel to just short of overflowing. Replace the syringe plunger and compress the sample. Open the syringe valve and vent any residual air while adjusting the sample volume to 5.0 mL. Since this process of taking an aliquot destroys the validity of the sample for future analysis, the analyst should fill a second syringe at this time to protect against possible loss of data. Add 10.0 µL of the internal standard spiking solution (Section 7.4.2), if applicable, through the valve bore then close the valve.

10.5 Attach the syringe-syringe valve assembly to the syringe valve on the purging device. Open the syringe valves and inject the sample into the purging chamber.

10.6 Close both valves and purge the sample for 15.0 ±0.1 min while heating at 85 ±2 °C.

10.7 After the 15-min purge time, attach the trap to the chromatograph, adjust the purge and trap system to the desorb mode (Figure 4), and begin to temperature program the gas chromatograph. Introduce the trapped materials to the GC column by rapidly heating the trap to 180 °C while backflushing the trap with an inert gas between 20 and 60 mL/min for 1.5 min.

10.8 While the trap is being desorbed into the gas chromatograph, empty the purging chamber using the sample introduction syringe. Wash the chamber with two 5-mL flushes of reagent water.

10.9 After desorbing the sample for 1.5 min, recondition the trap by returning the purge and trap system to the purge mode. Wait 15 s then close the syringe valve on the purging device to begin gas flow through the trap. The trap temperature should be maintained at 210 °C. After approximately 7 min, turn off the trap heater and open the syringe valve to stop the gas flow through the trap. When the trap is cool, the next sample can be analyzed.

10.10 Identify the parameters in the sample by comparing the retention times of the peaks in the sample chromatogram with those of the peaks in standard chromatograms. The width of the retention time window used to make identifications should be based upon measurements of actual retention time variations of standards over the course of a day. Three times the standard deviation of a retention time for a compound can be used to calculate a suggested window size; however, the experience of the analyst should weigh heavily in the interpretation of chromatograms.

11. Calculations

11.1 Determine the concentration of individual compounds in the sample.

11.1.1 If the external standard calibration procedure is used, calculate the concentration of the parameter being measured from the peak response using the calibration curve or calibration factor determined in Section 7.3.2.

11.1.2 If the internal standard calibration procedure is used, calculate the concentration in the sample using the response factor (RF) determined in Section 7.4.3 and Equation 2.

$$\text{Concentration } (\mu\text{g/L}) = \frac{(A_s)(C_{is})}{(A_{is})(RF)}$$

Equation 2

where:

A_s=Response for the parameter to be measured.

A_{is}=Response for the internal standard.

C_{is}=Concentration of the internal standard.

11.2 Report results in µg/L without correction for recovery data. All QC data obtained should be reported with the sample results.

12. Method Performance

12.1 The method detection limit (MDL) is defined as the minimum concentration of a substance that can be measured and reported with 99% confidence that the value is above zero.[1] The MDL concentrations listed in Table 1 were obtained using reagent water.[9] The MDL actually achieved in a given analysis will vary depending on instrument sensitivity and matrix effects.

12.2 This method is recommended for the concentration range from the MDL to 1,000×MDL. Direct aqueous injection techniques should be used to measure concentration levels above 1,000×MDL.

12.3 In a single laboratory (Battelle-Columbus), the average recoveries and standard deviations presented in Table 2 were obtained.[9] Seven replicate samples were analyzed at each spike level.

References

1. 40 CFR part 136, appendix B.
2. Bellar, T.A., and Lichtenberg, J.J. ''Determining Volatile Organics at Microgram-per-Litre-Levels by Gas Chromatography,'' *Journal American Water Works Association*, *66*, 739 (1974).
3. ''Evaluate Test Procedures for Acrolein and Acrylonitrile,'' Special letter report for EPA Project 4719–A, U.S. Environmental Protection Agency, Environmental Monitoring and Support Laboratory, Cincinnati, Ohio 45268, 27 June 1979.
4. ''Carcinogens—Working With Carcinogens,'' Department of Health, Education, and Welfare, Public Health Service, Center for Disease Control, National Institute for Occupational Safety and Health, Publication No. 77–206, August 1977.
5. ''OSHA Safety and Health Standards, General Industry,'' (29 CFR part 1910), Occupational Safety and Health Administration, OSHA 2206 (Revised, January 1976).
6. ''Safety in Academic Chemistry Laboratories,'' American Chemical Society Publication, Committee on Chemical Safety, 3rd Edition, 1979.
7. Provost, L.P., and Elder, R.S. ''Interpretation of Percent Recovery Data,'' *American Laboratory*, *15*, 58–63 (1983).
8. ''Methods 330.4 (Titrimetric, DPD-FAS) and 330.5 (Spectrophotometric, DPD) for Chlorine, Total Residual,'' Methods for Chemical Analysis of Water and Wastes, EPA–600/4–79–020, U.S. Environmental Protection Agency, Environmental Monitoring and Support Laboratory, Cincinnati, Ohio 45268, March 1979.
9. ''Evaluation of Method 603 (Modified),'' EPA–600/4–84–ABC, National Technical Information Service, PB84–, Springfield, Virginia 22161, Nov. 1984.

TABLE 1—CHROMATOGRAPHIC CONDITIONS AND METHOD DETECTION LIMITS

Parameter	Retention time (min)		Method detection limit (μg/L)
	Column 1	Column 2	
Acrolein	10.6	8.2	0.7
Acrylonitrile	12.7	9.8	0.5

Column 1 conditions: Porapak-QS (80/100 mesh) packed in a 10 ft × 2 mm ID glass or stainless steel column with helium carrier gas at 30 mL/min flow rate. Column temperature held isothermal at 110 °C for 1.5 min (during desorption), then heated as rapidly as possible to 150 °C and held for 20 min; column bakeout at 190 °C for 10 min.[9]

Column 2 conditions: Chromosorb 101 (60/80 mesh) packed in a 6 ft. × 0.1 in. ID glass or stainless steel column with helium carrier gas at 40 mL/min flow rate. Column temperature held isothermal at 80 °C for 4 min, then programmed at 50 °C/min to 120 °C and held for 12 min.

TABLE 2—SINGLE LABORATORY ACCURACY AND PRECISION—METHOD 603

Parameter	Sample matrix	Spike conc. (μg/L)	Average recovery (μg/L)	Standard deviation (μg/L)	Average percent recovery
Acrolein	RW	5.0	5.2	0.2	104
	RW	50.0	51.4	0.7	103
	POTW	5.0	4.0	0.2	80
	POTW	50.0	44.4	0.8	89
	IW	5.0	0.1	0.1	2
	IW	100.0	9.3	1.1	9
Acrylonitrile	RW	5.0	4.2	0.2	84
	RW	50.0	51.4	1.5	103
	POTW	20.0	20.1	0.8	100
	POTW	100.0	101.3	1.5	101
	IW	10.0	9.1	0.8	91
	IW	100.0	104.0	3.2	104

ARW=Reagent water.
APOTW=Prechlorination secondary effluent from a municipal sewage treatment plant.
AIW=Industrial wastewater containing an unidentified acrolein reactant.

TABLE 3—CALIBRATION AND QC ACCEPTANCE CRITERIA—METHOD 603[A]

Parameter	Range for Q (μg/L)	Limit for S (μg/L)	Range for X (μg/L)	Range for P, P_s (%)
Acrolein	45.9–54.1	4.6	42.9–60.1	88–118
Acrylonitrile	41.2–58.8	9.9	33.1–69.9	71–135

[a]=Criteria were calculated assuming a QC check sample concentration of 50 μg/L.[9]
Q=Concentration measured in QC check sample, in μg/L (Section 7.5.3).

s=Standard deviation of four recovery measurements, in µg/L (Section 8.2.4).
X=Average recovery for four recovery measurements, in µg/L (Section 8.2.4).
P, P_s=Percent recovery measured (Section 8.3.2, Section 8.4.2).

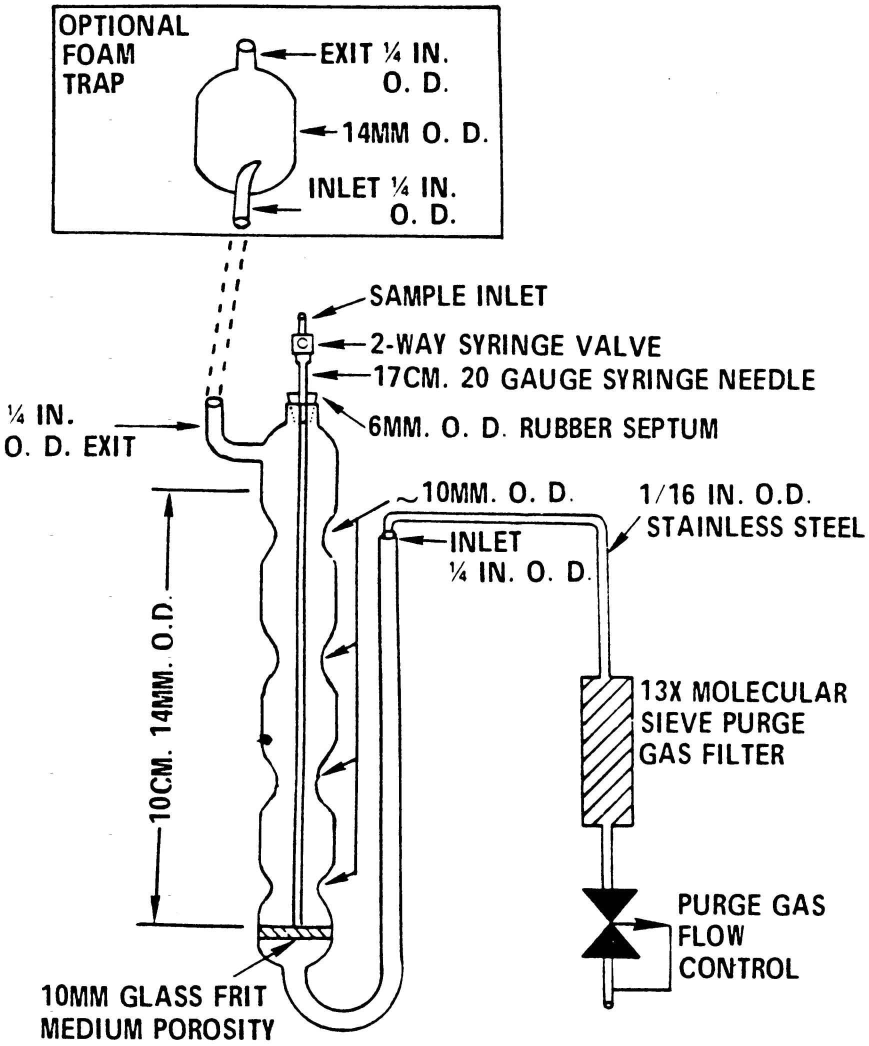

Figure 1. Purging device.

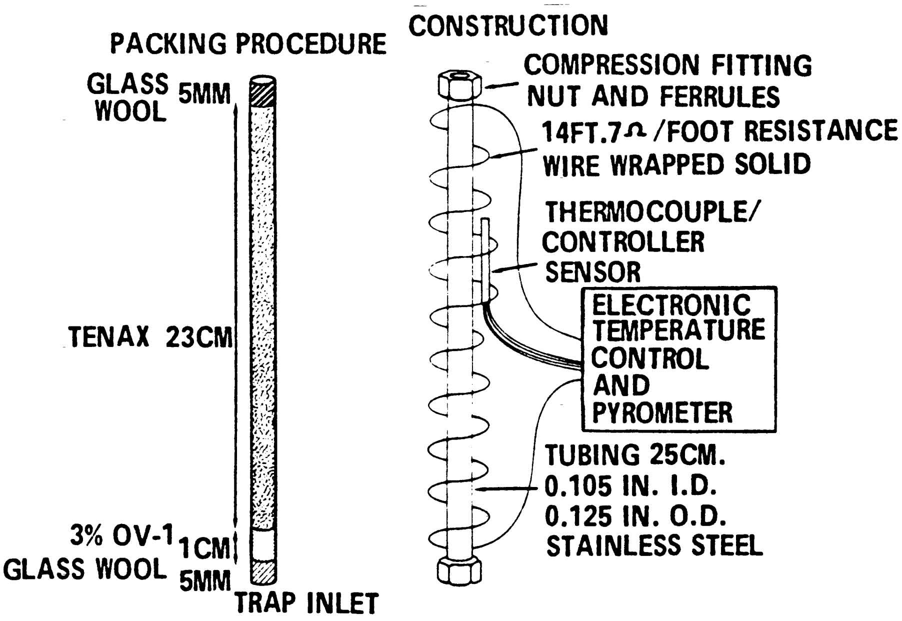

Figure 2. Trap packings and construction to include desorb capability.

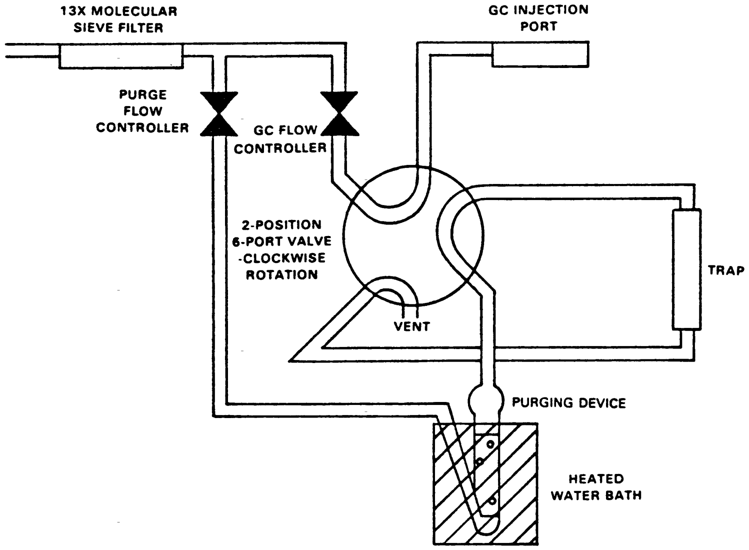

Figure 3. Purge and trap system-purge mode.

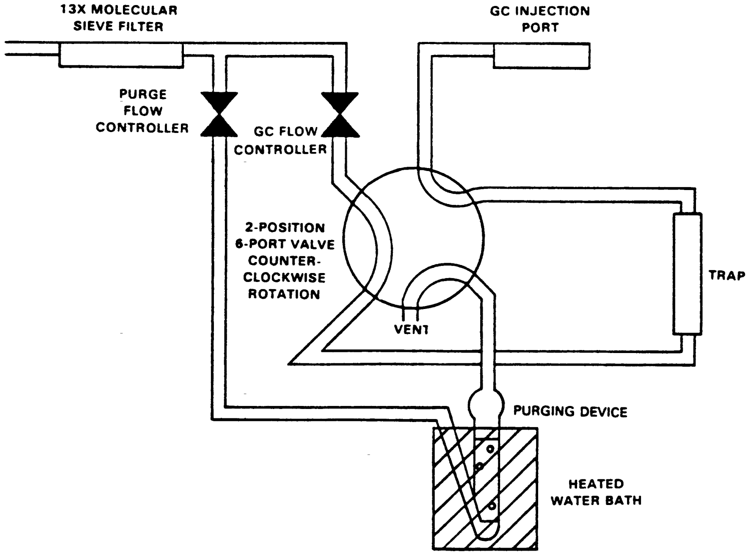

Figure 4. Purge and trap system-desorb mode.

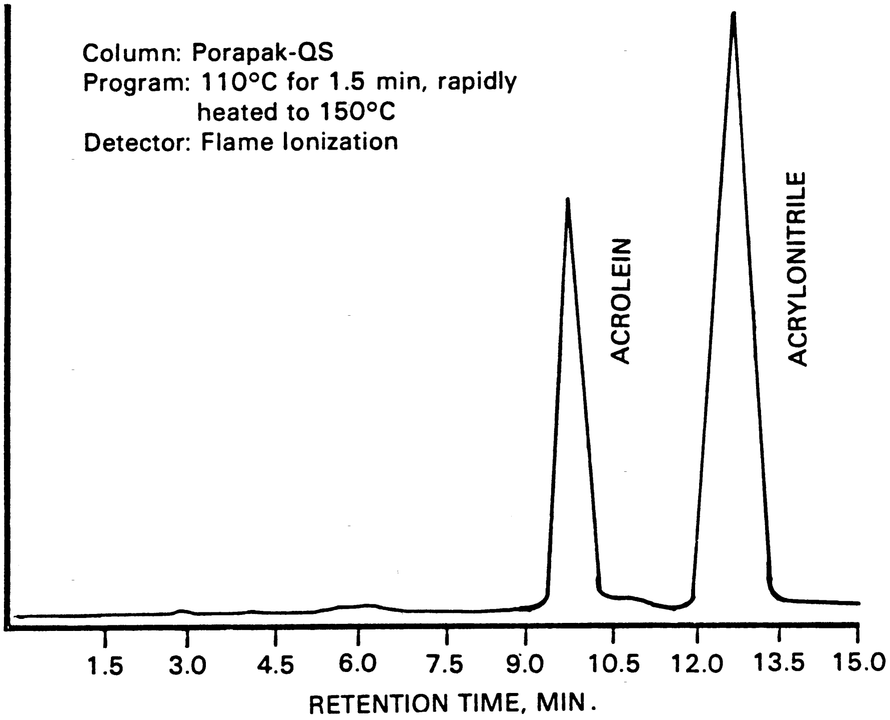

Figure 5. Gas chromatogram of acrolein and acrylonitrile.

METHOD 604—PHENOLS

1. Scope and Application

1.1 This method covers the determination of phenol and certain substituted phenols. The following parameters may be determined by this method:

Parameter	STORET No.	CAS No.
4-Chloro-3-methylphenol	34452	59–50–7
2—Chlorophenol	34586	95–57–8
2,4-Dichlorophenol	34601	120–83–2
2,4-Dimethylphenol	34606	105–67–9
2,4-Dinitrophenol	34616	51–28–5
2-Methyl-4,6-dinitrophenol	34657	534–52–1
2-Nitrophenol	34591	88–75–5
4-Nitrophenol	34646	100–02–7
Pentachlorophenol	39032	87–86–5
Phenol	34694	108–95–2
2,4,6-Trichlorophenol	34621	88–06–2

1.2 This is a flame ionization detector gas chromatographic (FIDGC) method applicable to the determination of the compounds listed above in municipal and industrial discharges as provided under 40 CFR 136.1. When this method is used to analyze unfamiliar samples for any or all of the compounds above, compound identifications should be supported by at least one additional qualitative technique. This method describes analytical conditions for derivatization, cleanup, and electron capture detector gas chromatography (ECDGC) that can be used to confirm measurements made by FIDGC. Method 625 provides gas chromatograph/mass spectrometer (GC/MS) conditions appropriate for the qualitative and quantitative confirmation of results for all of the parameters listed above, using the extract produced by this method.

1.3 The method detection limit (MDL, defined in Section 14.1)[1] for each parameter is listed in Table 1. The MDL for a specific wastewater may differ from those listed, depending upon the nature of interferences in the sample matrix. The MDL listed in Table 1 for each parameter was achieved with a flame ionization detector (FID). The MDLs that were achieved when the derivatization cleanup and electron capture detector (ECD) were employed are presented in Table 2.

1.4 Any modification of this method, beyond those expressly permitted, shall be considered as a major modification subject to application and approval of alternate test procedures under 40 CFR 136.4 and 136.5.

1.5 This method is restricted to use by or under the supervision of analysts experienced in the use of a gas chromatograph and in the interpretation of gas chromatograms. Each analyst must demonstrate the ability to generate acceptable results with this method using the procedure described in Section 8.2.

2. Summary of Method

2.1 A measured volume of sample, approximately 1-L, is acidified and extracted with methylene chloride using a separatory funnel. The methylene chloride extract is dried and exchanged to 2-propanol during concentration to a volume of 10 mL or less. The extract is separated by gas chromatography and the phenols are then measured with an FID.[2]

2.2 A preliminary sample wash under basic conditions can be employed for samples having high general organic and organic base interferences.

2.3 The method also provides for a derivatization and column chromatography cleanup procedure to aid in the elimination of interferences.[2,3] The derivatives are analyzed by ECDGC.

3. Interferences

3.1 Method interferences may be caused by contaminants in solvents, reagents, glassware, and other sample processing hardware that lead to discrete artifacts and/or elevated baselines in gas chromatograms. All of these materials must be routinely demonstrated to be free from interferences under the conditions of the analysis by running laboratory reagent blanks as described in Section 8.1.3.

3.1.1 Glassware must be scrupulously cleaned.[4] Clean all glassware as soon as possible after use by rinsing with the last solvent used in it. Solvent rinsing should be followed by detergent washing with hot water, and rinses with tap water and distilled water. The glassware should then be drained dry, and heated in a muffle furnace at 400 °C for 15 to 30 min. Some thermally stable materials, such as PCBs, may not be eliminated by this treatment. Solvent rinses with acetone and pesticide quality hexane may be substituted for the muffle furnace heating. Thorough rinsing with such solvents usually eliminates PCB interference. Volumetric ware should not be heated in a muffle furnace. After drying and cooling, glassware should be sealed and stored in a clean environment to prevent any accumulation of dust or other contaminants. Store inverted or capped with aluminum foil.

3.1.2 The use of high purity reagents and solvents helps to minimize interference problems. Purification of solvents by distillation in all-glass systems may be required.

3.2 Matrix interferences may be caused by contaminants that are coextracted from the sample. The extent of matrix interferences will vary considerably from source to source, depending upon the nature and diversity of the industrial complex or municipality being sampled. The derivatization cleanup procedure in Section 12 can be used to overcome many of these interferences, but unique samples may require additional cleanup approaches to achieve the MDL listed in Tables 1 and 2.

3.3 The basic sample wash (Section 10.2) may cause significantly reduced recovery of phenol and 2,4-dimethylphenol. The analyst must recognize that results obtained under these conditions are minimum concentrations.

4. Safety

4.1 The toxicity or carcinogenicity of each reagent used in this mothod has not been precisely defined; however, each chemical compound should be treated as a potential health hazard. From this viewpoint, exposure to these chemicals must be reduced to the lowest possible level by whatever means available. The laboratory is responsible for maintaining a current awareness file of OSHA regulations regarding the safe handling of the chemicals specified in this method. A reference file of material data handling sheets should also be made available to all personnel involved in the chemical analysis. Additional references to laboratory safety are available and have been identified[5,7] for the information of analyst.

4.2 Special care should be taken in handling pentafluorobenzyl bromide, which is a lachrymator, and 18-crown-6-ether, which is highly toxic.

5. Apparatus and Materials

5.1 Sampling equipment, for discrete or composite sampling.

5.1.1 Grab sample bottle—1–L or 1-qt, amber glass, fitted with a screw cap lined with Teflon. Foil may be substituted for Teflon if the sample is not corrosive. If amber bottles are not available, protect samples from light. The bottle and cap liner must be washed, rinsed with acetone or methylene chloride, and dried before use to minimize contamination.

5.1.2 Automatic sampler (optional)—The sampler must incorporate glass sample containers for the collection of a minimum of 250 mL of sample. Sample containers must be kept refrigerated at 4 °C and protected from light during compositing. If the sampler uses a peristaltic pump, a minimum length of compressible silicone rubber tubing may be used. Before use, however, the compressible tubing should be thoroughly rinsed with methanol, followed by repeated rinsings with distilled water to minimize the potential for contamination of the sample. An integrating flow meter is required to collect flow proportional composites.

5.2 Glassware (All specifications are suggested. Catalog numbers are included for illustration only.):

5.2.1 Separatory funnel—2–L, with Teflon stopcock.

5.2.2 Drying column—Chromatographic column, 400 mm long × 19 mm ID, with coarse frit filter disc.

5.2.3 Chromatographic column—100 mm long × 10 mm ID, with Teflon stopcock.

5.2.4 Concentrator tube, Kuderna-Danish—10-mL, graduated (Kontes K–570050–1025 or equivalent). Calibration must be checked at the volumes employed in the test. Ground glass stopper is used to prevent evaporation of extracts.

5.2.5 Evaporative flask, Kuderna-Danish—500-mL (Kontes K–570001–0500 or equivalent). Attach to concentrator tube with springs.

5.2.6 Snyder column, Kuderna-Danish—Three-ball macro (Kontes K–503000–0121 or equivalent).

5.2.7 Snyder column, Kuderna-Danish—Two-ball micro (Kontes K–569001–0219 or equivalent).

5.2.8 Vials—10 to 15-mL, amber glass, with Teflon-lined screw cap.

5.2.9 Reaction flask—15 to 25-mL round bottom flask, with standard tapered joint, fitted with a water-cooled condenser and U-shaped drying tube containing granular calcium chloride.

5.3 Boiling chips—Approximately 10/40 mesh. Heat to 400 °C for 30 min or Soxhlet extract with methylene chloride.

5.4 Water bath—Heated, with concentric ring cover, capable of temperature control (±2°C). The bath should be used in a hood.

5.5 Balance—Analytical, capable of accurately weighting 0.0001 g.

5.6 Gas chromatograph—An analytical system complete with a temperature programmable gas chromatograph suitable for on-column injection and all required accessories including syringes, analytical columns, gases, detector, and strip-chart recorder. A data system is recommended for measuring peak areas.

5.6.1 Column for underivatized phenols—1.8 m long × 2 mm ID glass, packed with 1% SP–1240DA on Supelcoport (80/100 mesh) or equivalent. This column was used to develop the method performance statements in Section 14. Guidelines for the use of alternate column packings are provided in Section 11.1.

5.6.2 Column for derivatized phenols—1.8 m long × 2 mm ID glass, packed with 5% OV–17 on Chromosorb W-AW-DMCS (80/100 mesh) or equivalent. This column has proven effective in the analysis of wastewaters for derivatization products of the parameters listed in the scope (Section 1.1), and was used to develop the method performance statements in Section 14. Guidelines for the use of alternate column packings are provided in Section 11.1.

5.6.3 Detectors—Flame ionization and electron capture detectors. The FID is used when determining the parent phenols. The ECD is used when determining the derivatized phenols. Guidelines for the use of alternatve detectors are provided in Section 11.1.

6. Reagents

6.1 Reagent water—Reagent water is defined as a water in which an interferent is not observed at the MDL of the parameters of interest.

6.2 Sodium hydroxide solution (10 N)—Dissolve 40 g of NaOH (ACS) in reagent water and dilute to 100 mL.

6.3 Sodium hydroxide solution (1 N)—Dissolve 4 g of NaOH (ACS) in reagent water and dilute to 100 mL.

6.4 Sodium sulfate—(ACS) Granular, anhydrous. Purify by heating at 400°C for 4 h in a shallow tray.

6.5 Sodium thiosulfate—(ACS) Granular.

6.6 Sulfuric acid (1+1)—Slowly, add 50 mL of H_2SO_4 (ACS, sp. gr. 1.84) to 50 mL of reagent water.

6.7 Sulfuric acid (1 N)—Slowly, add 58 mL of H_2SO_4 (ACS, sp. gr. 1.84) to reagent water and dilute to 1 L.

6.8 Potassium carbonate—(ACS) Powdered.

6.9 Pentafluorobenzyl bromide (α-Bromopentafluorotoluene)—97% minimum purity.

NOTE: This chemical is a lachrymator. (See Section 4.2.)

6.10 18-crown-6-ether (1,4,7,10,13,16-Hexaoxacyclooctadecane)—98% minimum purity.

NOTE: This chemical is highly toxic.

6.11 Derivatization reagent—Add 1 mL of pentafluorobenzyl bromide and 1 g of 18-crown-6-ether to a 50-mL volumetric flask and dilute to volume with 2-propanol. Prepare fresh weekly. This operation should be carried out in a hood. Store at 4 °C and protect from light.

6.12 Acetone, hexane, methanol, methylene chloride, 2-propanol, toluene—Pesticide quality or equivalent.

6.13 Silica gel—100/200 mesh, Davison, grade-923 or equivalent. Activate at 130 °C overnight and store in a desiccator.

6.14 Stock standard solutions (1.00 μg/μL)—Stock standard solutions may be prepared from pure standard materials or purchased as certified solutions.

6.14.1 Prepare stock standard solutions by accurately weighing about 0.0100 g of pure material. Dissolve the material in 2-propanol and dilute to volume in a 10-mL volumetric flask. Larger volumes can be used at the convenience of the analyst. When compound purity is assayed to be 96% or greater, the weight can be used without correction to calculate the concentration of the stock standard. Commercially prepared stock standards can be used at any concentration if they are certified by the manufacturer or by an independent source.

6.14.2 Transfer the stock standard solutions into Teflon-sealed screw-cap bottles. Store at 4 °C and protect from light. Stock standard solutions should be checked frequently for signs of degradation or evaporation, especially just prior to preparing calibration standards from them.

6.14.3 Stock standard solutions must be replaced after six months, or sooner if comparison with check standards indicates a problem.

6.15 Quality control check sample concentrate—See Section 8.2.1.

7. Calibration

7.1 To calibrate the FIDGC for the anaylsis of underivatized phenols, establish gas chromatographic operating conditions equivalent to those given in Table 1. The gas chromatographic system can be calibrated using the external standard technique (Section 7.2) or the internal standard technique (Section 7.3).

7.2 External standard calibration procedure for FIDGC:

7.2.1 Prepare calibration standards at a minimum of three concentration levels for each parameter of interest by adding volumes of one or more stock standards to a volumetric flask and diluting to volume with 2-propanol. One of the external standards should be at a concentration near, but above, the MDL (Table 1) and the other concentrations should correspond to the expected range of concentrations found in real samples or should define the working range of the detector.

7.2.2 Using injections of 2 to 5 µl, analyze each calibration standard according to Section 11 and tabulate peak height or area responses against the mass injected. The results can be used to prepare a calibration curve for each compound. Alternatively, if the ratio of response to amount injected (calibration factor) is a constant over the working range (<10% relative standard deviation, RSD), linearity through the origin can be assumed and the average ratio or calibration factor can be used in place of a calibration curve.

7.3 Internal standard calibration procedure for FIDGC—To use this approach, the analyst must select one or more internal standards that are similar in analytical behavior to the compounds of interest. The analyst must further demonstrate that the measurement of the internal standard is not affected by method or matrix interferences. Because of these limitations, no internal standard can be suggested that is applicable to all samples.

7.3.1 Prepare calibration standards at a minimum of three concentration levels for each parameter of interest by adding volumes of one or more stock standards to a volumetric flask. To each calibration standard, add a known constant amount of one or more internal standards, and dilute to volume with 2-propanol. One of the standards should be at a concentration near, but above, the MDL and the other concentrations should correspond to the expected range of concentrations found in real samples or should define the working range of the detector.

7.3.2 Using injections of 2 to 5 µL, analyze each calibration standard according to Section 11 and tabulate peak height or area responses against concentration for each compound and internal standard. Calculate response factors (RF) for each compound using Equation 1.

$$RF = (A_s)(C_{is}\ (A_{is})(C_s)$$

Equation 1

where:

A_s=Response for the parameter to be measured.

A_{is}=Response for the internal standard.

C_{is}=Concentration of the internal standard (µg/L).

C_s=Concentration of the parameter to be measured (µg/L).

If the RF value over the working range is a constant (<10% RSD), the RF can be assumed to be invariant and the average RF can be used for calculations. Alternatively, the results can be used to plot a calibration curve of response ratios, A_s/A_{is}, vs. RF.

7.4 The working calibration curve, calibration factor, or RF must be verified on each working day by the measurement of one or more calibration standards. If the response for any parameter varies from the predicted response by more than ±15%, a new calibration curve must be prepared for that compound.

7.5 To calibrate the ECDGC for the analysis of phenol derivatives, establish gas chromatographic operating conditions equivalent to those given in Table 2.

7.5.1 Prepare calibration standards at a minimum of three concentration levels for each parameter of interest by adding volumes of one or more stock standards to a volumetric flask and diluting to volume with 2-propanol. One of the external standards should be at a concentration near, but above, the MDL (Table 2) and the other concentrations should correspond to the expected range of concentrations found in real samples or should define the working range of the detector.

7.5.2 Each time samples are to be derivatized, simultaneously treat a 1-mL aliquot of each calibration standard as described in Section 12.

7.5.3 After derivatization, analyze 2 to 5 µL of each column eluate collected according to the method beginning in Section 12.8 and tabulate peak height or area responses against the calculated equivalent mass of underivatized phenol injected. The results can be used to prepare a calibration curve for each compound.

7.6 Before using any cleanup procedure, the analyst must process a series of calibration standards through the procedure to validate elution patterns and the absence of interferences from the reagents.

8. Quality Control

8.1 Each laboratory that uses this method is required to operate a formal quality control program. The minimum requirements of this program consist of an initial demonstration of laboratory capability and an ongoing analysis of spiked samples to evaluate and document data quality. The laboratory must maintain records to document the quality of data that is generated. Ongoing data quality checks are compared with established performance criteria to determine if the results of analyses meet the performance characteristics of the method. When results of sample spikes indicate atypical method performance, a quality control check standard must be analyzed to confirm that the measurements were performed in an in-control mode of operation.

8.1.1 The analyst must make an initial, one-time, demonstration of the ability to generate acceptable accuracy and precision with this method. This ability is established as described in Section 8.2.

8.1.2 In recognition of advances that are occurring in chromatography, the analyst is permitted certain options (detailed in Sections 10.6 and 11.1) to improve the separations or lower the cost of measurements. Each time such a modification is made to the method, the analyst is required to repeat the procedure in Section 8.2.

8.1.3 Before processing any samples the analyst must analyze a reagent water blank to demonstrate that interferences from the analytical system and glassware are under control. Each time a set of samples is extracted or reagents are changed a reagent water blank must be processed as a safeguard against laboratory contamination.

8.1.4 The laboratory must, on an ongoing basis, spike and analyze a minimum of 10% of all samples to monitor and evaluate laboratory data quality. This procedure is described in Section 8.3.

8.1.5 The laboratory must, on an ongoing basis, demonstrate through the analyses of quality control check standards that the operation of the measurement system is in control. This procedure is described in Section 8.4. The frequency of the check standard analyses is equivalent to 10% of all samples analyzed but may be reduced if spike recoveries from samples (Section 8.3) meet all specified quality control criteria.

8.1.6 The laboratory must maintain performance records to document the quality of data that is generated. This procedure is described in Section 8.5.

8.2 To establish the ability to generate acceptable accuracy and precision, the analyst must perform the following operations.

8.2.1 A quality control (QC) check sample concentrate is required containing each parameter of interest at a concentration of 100 µg/mL in 2-propanol. The QC check sample concentrate must be obtained from the U.S. Environmental Protection Agency, Environmental Monitoring and Support Laboratory in Cincinnati, Ohio, if available. If not available from that source, the QC check sample concentrate must be obtained from another external source. If not available from either source above, the QC check sample concentrate must be prepared by the laboratory using stock standards prepared independently from those used for calibration.

8.2.2 Using a pipet, prepare QC check samples at a concentration of 100 µg/L by adding 1.00 mL of QC check sample concentrate to each of four 1-L aliquots of reagent water.

8.2.3 Analyze the well-mixed QC check samples according to the method beginning in Section 10.

8.2.4 Calculate the average recovery ($\bar{X}$) in µg/L, and the standard deviation of the recovery (s) in µg/L, for each parameter using the four results.

8.2.5 For each parameter compare s and $\bar{X}$ with the corresponding acceptance criteria for precision and accuracy, respectively, found in Table 3. If s and $\bar{X}$ for all parameters of interest meet the acceptance criteria, the system performance is acceptable and analysis of actual samples can begin. If any individual s exceeds the precision limit or any individual $\bar{X}$ falls outside the range for accuracy, the system performance is unacceptable for that parameter.

NOTE: The large number of parameters in Talbe 3 present a substantial probability that one or more will fail at least one of the acceptance criteria when all parameters are analyzed.

8.2.6 When one or more of the parameters tested fail at least one of the acceptance criteria, the analyst must proceed according to Section 8.2.6.1 or 8.2.6.2.

8.2.6.1 Locate and correct the source of the problem and repeat the test for all parameters of interest beginning with Section 8.2.2.

8.2.6.2 Beginning with Section 8.2.2, repeat the test only for those parameters that failed to meet criteria. Repeated failure, however, will confirm a general problem with the measurement system. If this occurs, locate and correct the source of the problem and repeat the test for all compounds of interest beginning with Section 8.2.2.

8.3 The laboratory must, on an ongoing basis, spike at least 10% of the samples from each sample site being monitored to assess accuracy. For laboratories analyzing one to ten samples per month, at least one spiked sample per month is required.

8.3.1 The concentration of the spike in the sample should be determined as follows:

8.3.1.1 If, as in compliance monitoring, the concentration of a specific parameter in the sample is being checked against a regulatory concentration limit, the spike should be at that limit or 1 to 5 times higher than the background concentration determined in Section 8.3.2, whichever concentration would be larger.

8.3.1.2 If the concentration of a specific parameter in the sample is not being checked against a limit specific to that parameter, the spike should be at 100 μg/L or 1 to 5 times higher than the background concentration determined in Section 8.3.2, whichever concentration would be larger.

8.3.1.3 If it is impractical to determine background levels before spiking (e.g., maximum holding times will be exceeded), the spike concentration should be (1) the regulatory concentration limit, if any, or, if none, (2) the larger of either 5 times higher than the expected background concentration or 100 μg/L.

8.3.2 Analyze one sample aliquot to determine the background concentration (B) of each parameter. If necessary, prepare a new QC check sample concentrate (Section 8.2.1) appropriate for the background concentrations in the sample. Spike a second sample aliquot with 1.0 mL of the QC check sample concentrate and analyze it to determine the concentration after spiking (A) of each parameter. Calculate each percent recovery (P) as 100(A − B)%/T, where T is the known true value of the spike.

8.3.3 Compare the percent recovery (P) for each parameter with the corresponding QC acceptance criteria found in Table 3. These acceptance criteria were calculated to include an allowance for error in measurement of both the background and spike concentrations, assuming a spike to background ratio of 5:1. This error will be accounted for to the extent that the analyst's spike to background ratio approaches 5:1.[8] If spiking was performed at a concentration lower than 100 μg/L, the analyst must use either the QC acceptance criteria in Table 3, or optional QC acceptance criteria calculated for the specific spike concentration. To calculate optional acceptance criteria for the recovery of a parameter: (1) Calculate accuracy (X') using the equation in Table 4, substituting the spike concentration (T) for C; (2) calculate overall precision (S') using the equation in Table 4, substituting X' for $\bar{X}$; (3) calculate the range for recovery at the spike concentration as $(100\ X'/T) \pm 2.44(100\ S'/T)\%$.[8]

8.3.4 If any individual P falls outside the designated range for recovery, that parameter has failed the acceptance criteria. A check standard containing each parameter that failed the criteria must be analyzed as described in Section 8.4.

8.4 If any parameter fails the acceptance criteria for recovery in Section 8.3, a QC check standard containing each parameter that failed must be prepared and analyzed.

NOTE: The frequency for the required analysis of a QC check standard will depend upon the number of parameters being simultaneously tested, the complexity of the sample matrix, and the performance of the laboratory.

8.4.1 Prepare the QC check standard by adding 1.0 mL of QC check sample concentrate (Section 8.2.1 or 8.3.2) to 1 L of reagent water. The QC check standard needs only to contain the parameters that failed criteria in the test in Section 8.3.

8.4.2 Analyze the QC check standard to determine the concentration measured (A) of each parameter. Calculate each percent recovery (P_s) as 100 (A/T)%, where T is the true value of the standard concentration.

8.4.3 Compare the percent recovery (P_s) for each parameter with the corresponding QC acceptance criteria found in Table 3. Only parameters that failed the test in Section 8.3 need to be compared with these criteria. If the recovery of any such parameter falls outside the designated range, the laboratory performance for that parameter is judged to be out of control, and the problem must be immediately identified and corrected. The analytical result for that parameter in the unspiked sample is suspect and may not be reported for regulatory compliance purposes.

8.5 As part of the QC program for the laboratory, method accuracy for wastewater samples must be assessed and records must be maintained. After the analysis of five spiked wastewater samples as in Section 8.3, calculate the average percent recovery ($\bar{P}$) and the standard deviation of the percent recovery (s_p). Express the accuracy assessment as a percent recovery interval from $\bar{P} - 2s_p$ to $\bar{P} + 2s_p$. If $\bar{P}$=90% and s_p=10%, for example, the accuracy interval is expressed as 70–110%. Update the accuracy assessment for each parameter on a regular basis (e.g. after each five to ten new accuracy measurements).

8.6. It is recommended that the laboratory adopt additional quality assurance practices for use with this method. The specific practices that are most productive depend upon the needs of the laboratory and the nature of the samples. Field duplicates may be analyzed to assess the precision of the environmental measurements. When doubt exists over the identification of a peak on the chromatogram, confirmatory techniques such as gas chromatography with a dissimilar column, specific element detector, or mass spectrometer must be used. Whenever possible, the laboratory should analyze standard reference materials and participate in relevant performance evaluation studies.

9. Sample Collection, Preservation, and Handling

9.1 Grab samples must be collected in glass containers. Conventional sampling practices[9] should be followed, except that the bottle must not be prerinsed with sample before collection. Composite samples should be collected in refrigerated glass containers in accordance with the requirements of the program. Automatic sampling equipment must be as free as possible of Tygon tubing and other potential sources of contamination.

9.2 All samples must be iced or refrigerated at 4 °C from the time of collection until extraction. Fill the sample bottles and, if residual chlorine is present, add 80 mg of sodium thiosulfate per liter of sample and mix well. EPA Methods 330.4 and 330.5 may be used for measurement of residual chlorine.[10] Field test kits are available for this purpose.

9.3 All samples must be extracted within 7 days of collection and completely analyzed within 40 days of extraction.[2]

10. Sample Extraction

10.1 Mark the water meniscus on the side of sample bottle for later determination of sample volume. Pour the entire sample into a 2-L separatory funnel.

10.2 For samples high in organic content, the analyst may solvent wash the sample at basic pH as prescribed in Sections 10.2.1 and 10.2.2 to remove potential method interferences. Prolonged or exhaustive contact with solvent during the wash may result in low recovery of some of the phenols, notably phenol and 2,4-dimethylphenol. For relatively clean samples, the wash should be omitted and the extraction, beginning with Section 10.3, should be followed.

10.2.1 Adjust the pH of the sample to 12.0 or greater with sodium hydroxide solution.

10.2.2 Add 60 mL of methylene chloride to the sample by shaking the funnel for 1 min with periodic venting to release excess pressure. Discard the solvent layer. The wash can be repeated up to two additional times if significant color is being removed.

10.3 Adjust the sample to a pH of 1 to 2 with sulfuric acid.

10.4 Add 60 mL of methylene chloride to the sample bottle, seal, and shake 30 s to rinse the inner surface. Transfer the solvent to the separatory funnel and extract the sample by shaking the funnel for 2 min. with periodic venting to release excess pressure. Allow the organic layer to separate from the water phase for a minimum of 10 min. If the emulsion interface between layers is more than one-third the volume of the solvent layer, the analyst must employ mechanical techniques to complete the phase separation. The optimum technique depends upon the sample, but may include stirring, filtration of the emulsion through glass wool, centrifugation, or other physical methods. Collect the methylene chloride extract in a 250-mL Erlenmeyer flask.

10.5 Add a second 60-mL volume of methylene chloride to the sample bottle and repeat the extraction procedure a second time, combining the extracts in the Erlenmeyer flask. Perform a third extraction in the same manner.

10.6 Assemble a Kuderna-Danish (K-D) concentrator by attaching a 10-mL concentrator tube to a 500-mL evaporative flask. Other concentration devices or techniques may be used in place of the K-D concentrator if the requirements of Section 8.2 are met.

10.7 Pour the combined extract through a solvent-rinsed drying column containing about 10 cm of anhydrous sodium sulfate, and collect the extract in the K-D concentrator. Rinse the Erlenmeyer flask and column with 20 to 30 mL of methylene chloride to complete the quantitative transfer.

10.8 Add one or two clean boiling chips to the evaporative flask and attach a three-ball Snyder column. Prewet the Snyder column by adding about 1 mL of methylene chloride to the top. Place the K-D apparatus on a hot water bath (60 to 65 °C) so that the concentrator tube is partially immersed in the hot water, and the entire lower rounded surface of the flask is bathed with hot vapor. Adjust the vertical position of the apparatus and the water temperature as required to complete the concentration in 15 to 20 min. At the proper rate of distillation the balls of the column will actively chatter but the chambers will not flood with condensed solvent. When the apparent volume of liquid reaches 1 mL, remove the K-D apparatus and allow it to drain and cool for at least 10 min.

10.9 Increase the temperature of the hot water bath to 95 to 100 °C. Remove the Synder column and rinse the flask and its lower joint into the concentrator tube with 1 to 2 mL of 2-propanol. A 5-mL syringe is recommended for this operation. Attach a two-ball micro-Snyder column to the concentrator tube and prewet the column by adding about 0.5 mL of 2-propanol to the top. Place the micro-K-D apparatus on the water bath so that the concentrator tube is partially immersed in the hot water. Adjust the vertical position of the apparatus and the water temperature as required to complete concentration in 5 to 10 min. At the proper rate of distillation the balls of the column will actively chatter but the chambers will not flood. When the apparent volume of liquid reaches 2.5 mL, remove the K-D apparatus and allow it to drain and cool for at least 10 min. Add an additional 2 mL of 2-propanol through the top of the micro-Snyder column and resume concentrating as before. When the apparent volume of liquid reaches 0.5 mL, remove the K-D apparatus and allow it to drain and cool for at least 10 min.

10.10 Remove the micro-Snyder column and rinse its lower joint into the concentrator tube with a minimum amount of 2-propanol. Adjust the extract volume to 1.0 mL. Stopper the concentrator tube and store refrigerated at 4 °C if further processing will not be performed immediately. If the extract will be stored longer than two days, it should be transferred to a Teflon-sealed screw-cap vial. If the sample extract requires no further cleanup, proceed with FIDGC analysis (Section 11). If the sample requires further cleanup, proceed to Section 12.

10.11 Determine the original sample volume by refilling the sample bottle to the mark and transferring the liquid to a 1000-mL graduated cylinder. Record the sample volume to the nearest 5 mL.

11. Flame Ionization Detector Gas Chromatography

11.1 Table 1 summarizes the recommended operating conditions for the gas chromatograph. Included in this table are retention times and MDL that can be achieved under these conditions. An example of the separations achieved by this column is shown in Figure 1. Other packed or capillary (open-tubular) columns, chromatographic conditions, or detectors may be used if the requirements of Section 8.2 are met.

11.2 Calibrate the system daily as described in Section 7.

11.3 If the internal standard calibration procedure is used, the internal standard must be added to the sample extract and mixed thoroughly immediately before injection into the gas chromatograph.

11.4 Inject 2 to 5 µL of the sample extract or standard into the gas chromatograph using the solvent-flush technique.[11] Smaller (1.0 µL) volumes may be injected if automatic devices are employed. Record the volume injected to the nearest 0.05 µL, and the resulting peak size in area or peak height units.

11.5 Identify the parameters in the sample by comparing the retention times of the peaks in the sample chromatogram with those of the peaks in standard chromatograms. The width of the retention time window used to make identifications should be based upon measurements of actual retention time variations of standards over the course of a day. Three times the standard deviation of a retention time for a compound may be used to calculate a suggested window size; however, the experience of the analyst should weigh heavily in the interpretation of chromatograms.

11.6 If the response for a peak exceeds the working range of the system, dilute the extract and reanalyze.

11.7 If the measurement of the peak response is prevented by the presence of interferences, an alternative gas chromatographic procedure is required. Section 12 describes a derivatization and column chromatographic procedure which has been tested and found to be a practical means of analyzing phenols in complex extracts.

12. Derivatization and Electron Capture Detector Gas Chromatography

12.1 Pipet a 1.0-mL aliquot of the 2-propanol solution of standard or sample extract into a glass reaction vial. Add 1.0 mL of derivatizing reagent (Section 6.11). This amount of reagent is sufficient to derivatize a solution whose total phenolic content does not exceed 0.3 mg/mL.

12.2 Add about 3 mg of potassium carbonate to the solution and shake gently.

12.3 Cap the mixture and heat it for 4 h at 80 °C in a hot water bath.

12.4 Remove the solution from the hot water bath and allow it to cool.

12.5 Add 10 mL of hexane to the reaction flask and shake vigorously for 1 min. Add 3.0 mL of distilled, deionized water to the reaction flask and shake for 2 min. Decant a portion of the organic layer into a concentrator tube and cap with a glass stopper.

12.6 Place 4.0 g of silica gel into a chromatographic column. Tap the column to settle the silica gel and add about 2 g of anhydrous sodium sulfate to the top.

12.7 Preelute the column with 6 mL of hexane. Discard the eluate and just prior to exposure of the sodium sulfate layer to the air, pipet onto the column 2.0 mL of the hexane solution (Section 12.5) that contains the derivatized sample or standard. Elute the column with 10.0 mL of hexane and discard the eluate. Elute the column, in order, with: 10.0 mL of 15% toluene in hexane (Fraction 1); 10.0 mL of 40% toluene in hexane (Fraction 2); 10.0 mL of 75% toluene in hexane (Fraction 3); and 10.0 mL of 15% 2-propanol in toluene (Fraction 4). All elution mixtures are prepared on a volume: volume basis. Elution patterns for the phenolic derivatives are shown in Table 2. Fractions may be combined as desired, depending upon the specific phenols of interest or level of interferences.

12.8 Analyze the fractions by ECDGC. Table 2 summarizes the recommended operating conditions for the gas chromatograph. Included in this table are retention times and MDL that can be achieved under these conditions. An example of the separations achieved by this column is shown in Figure 2.

12.9 Calibrate the system daily with a minimum of three aliquots of calibration standards, containing each of the phenols of interest that are derivatized according to Section 7.5.

12.10 Inject 2 to 5 µL of the column fractions into the gas chromatograph using the solvent-flush technique. Smaller (1.0 µL) volumes can be injected if automatic devices are employed. Record the volume injected to the nearest 0.05 µL, and the resulting peak size in area or peak height units. If the peak response exceeds the linear range of the system, dilute the extract and reanalyze.

13. Calculations

13.1 Determine the concentration of individual compounds in the sample analyzed by FIDGC (without derivatization) as indicated below.

13.1.1 If the external standard calibration procedure is used, calculate the amount of material injected from the peak response using the calibration curve or calibration factor determined in Section 7.2.2. The concentration in the sample can be calculated from Equation 2.

$$\text{Concentration } (\mu\text{g/L}) = \frac{(A)(V_t)}{(V_i)(V_s)}$$

Equation 2

where:

A=Amount of material injected (ng).

V_i=Volume of extract injected (µL).

V_t=Volume of total extract (µL).

V_s=Volume of water extracted (mL).

13.1.2 If the internal standard calibration procedure is used, calculate the concentration in the sample using the response factor (RF) determined in Section 7.3.2 and Equation 3.

$$\text{Concentration } (\mu\text{g/L}) = \frac{(A_s)(I_s)}{(A_{is})(RF)(V_o)}$$

Equation 3

where:

A_s=Response for the parameter to be measured.

A_{is}=Response for the internal standard.

I_s=Amount of internal standard added to each extract (µg).

V_o=Volume of water extracted (L).

13.2 Determine the concentration of individual compounds in the sample analyzed by derivatization and ECDGC according to Equation 4.

$$\text{Concentration } (\mu\text{g/L}) = \frac{(A)(V_t)(B)(D)}{(V_i)(V_s)(C)(E)}$$

Equation 4

where:

A=Mass of underivatized phenol represented by area of peak in sample chromatogram, determined from calibration curve in Section 7.5.3 (ng).

V_i=Volume of eluate injected (µL).

V_t=Total volume of column eluate or combined fractions from which V_i was taken (µL).

V_s=Volume of water extracted in Section 10.10 (mL).

B=Total volume of hexane added in Section 12.5 (mL).

C=Volume of hexane sample solution added to cleanup column in Section 12.7 (mL).

D=Total volume of 2-propanol extract prior to derivatization (mL).

E=Volume of 2-propanol extract carried through derivatization in Section 12.1 (mL).

13.3 Report results in µg/L without correction for recovery data. All QC data obtained should be reported with the sample results.

14. Method Performance

14.1 The method detection limit (MDL) is defined as the minimum concentration of a substance that can be measured and reported with 99% confidence that the value is above zero.[1] The MDL concentrations listed in Tables 1 and 2 were obtained using reagent water.[12] Similar results were achieved using representative wastewaters. The MDL actually achieved in a given analysis will vary depending on instrument sensitivity and matrix effects.

14.2 This method was tested by 20 laboratories using reagent water, drinking water, surface water, and three industrial wastewaters spiked as six concentrations over the range 12 to 450 µg/L.[13] Single operator precision, overall precision, and method accuracy were found to be directly related to the concentration of the parameter and essentially independent of the sample matrix. Linear equations to describe these relationships for a flame ionization detector are presented in Table 4.

References

1. 40 CFR part 136, appendix B.

2. ''Determination of Phenols in Industrial and Municipal Wastewaters,'' EPA 600/4–84–ABC, National Technical Information Service, PBXYZ, Springfield, Virginia 22161, November 1984.

3. Kawahara, F. K. ''Microdetermination of Derivatives of Phenols and Mercaptans by Means of Electron Capture Gas Chromatography,'' *Analytical Chemistry*, *40*, 1009 (1968).

4. ASTM Annual Book of Standards, Part 31, D3694–78. ''Standard Practices for Preparation of Sample Containers and for Preservation of Organic Constituents,'' American

Society for Testing and Materials, Philadelphia.

5. ''Carcinogens—Working With Carcinogens,'' Department of Health, Education, and Welfare, Public Health Service, Center for Disease Control, National Institute for Occupational Safety and Health, Publication No. 77–206, August 1977.

6. ''OSHA Safety and Health Standards, General Industry,'' (29 CFR part 1910), Occupational Safety and Health Administration, OSHA 2206 (Revised, January 1976).

7. ''Safety in Academic Chemistry Laboratories,'' American Chemical Society Publication, Committee on Chemical Safety, 3rd Edition, 1979.

8. Provost, L. P., and Elder, R. S. ''Interpretation of Percent Recovery Data,'' *American Laboratory*, *15*, 58–63 (1983). (The value 2.44 used in the equation in Section 8.3.3 is two times the value 1.22 derived in this report.)

9. ASTM Annual Book of Standards, Part 31, D3370–76. ''Standard Practices for Sampling Water,'' American Society for Testing and Materials, Philadelphia.

10. ''Methods 330.4 (Titrimetric, DPD-FAS) and 330.5 (Spectrophotometric, DPD) for Chlorine, Total Residual,'' Methmds for Chemical Analysis of Water and Wastes, EPA–600/4–79–020, U.S. Environmental Protection Agency, Environmental Monitoring and Support Laboratory, Cincinnati, Ohio 45268, March 1979.

11. Burke, J. A. ''Gas Chromatography for Pesticide Residue Analysis; Some Practical Aspects,'' *Journal of the Association of Official Analytical Chemists*, *48*, 1037 (1965).

12. ''Development of Detection Limits, EPA Method 604, Phenols,'' Special letter report for EPA Contract 68–03–2625, U.S. Environmental Protection Agency, Environmental Monitoring and Support Laboratory, Cincinnati, Ohio 45268.

13. ''EPA Method Study 14 Method 604-Phenols,'' EPA 600/4–84–044, National Technical Information Service, PB84–196211, Springfield, Virginia 22161, May 1984.

TABLE 1—CHROMATOGRAPHIC CONDITIONS AND METHOD DETECTION LIMITS

Parameter	Retention time (min)	Method detection limit (µg/L)
2-Chlorophenol	1.70	0.31
2-Nitrophenol	2.00	0.45
Phenol	3.01	0.14
2,4-Dimethylphenol	4.03	0.32
2,4-Dichlorophenol	4.30	0.39
2,4,6-Trichlorophenol	6.05	0.64
4-Chloro-3-methylphenol	7.50	0.36
2,4-Dinitrophenol	10.00	13.0
2-Methyl-4,6-dinitrophenol	10.24	16.0
Pentachlorophenol	12.42	7.4
4-Nitrophenol	24.25	2.8

Column conditions: Supelcoport (80/100 mesh) coated with 1% SP–1240DA packed in a 1.8 m long × 2 mm ID glass column with nitrogen carrier gas at 30 mL/min flow rate. Column temperature was 80 °C at injection, programmed immediately at 8 °C/min to 150 °C final temperature. MDL were determined with an FID.

TABLE 2—SILICA GEL FRACTIONATION AND ELECTRON CAPTURE GAS CHROMATOGRAPHY OF PFBB DERIVATIVES

Parent compound	Percent recovery by fraction[a]				Retention time (min)	Method detection limit (µg/L)
	1	2	3	4		
2-Chlorophenol	....	90	1	....	3.3	0.58
2-Nitrophenol	....	....	9	90	9.1	0.77
Phenol	....	90	10	....	1.8	2.2
2,4-Dimethylphenol	....	95	7	....	2.9	0.63
2,4-Dichlorophenol	....	95	1	....	5.8	0.68
2,4,6-Trichlorophenol	50	50	....	....	7.0	0.58
4-Chloro-3-methylphenol	....	84	14	....	4.8	1.8
Pentachlorophenol	75	20	....	....	28.8	0.59
4-Nitrophenol	....	....	1	90	14.0	0.70

Column conditions: Chromosorb W-AW-DMCS (80/100 mesh) coated with 5% OV–17 packed in a 1.8 m long × 2.0 mm ID glass column with 5% methane/95% argon carrier gas at 30 mL/min flow rate. Column temperature held isothermal at 200 °C. MDL were determined with an ECD.

[a] Eluant composition:
Fraction 1—15% toluene in hexane.
Fraction 2—40% toluene in hexane.
Fraction 3—75% toluene in hexane.
Fraction 4—15% 2-propanol in toluene.

TABLE 3—QC ACCEPTANCE CRITERIA—METHOD 604

Parameter	Test conc. (µg/L)	Limit for s (µg/L)	Range for $\bar{X}$ (µg/L)	Range for P, P_s (percent)
4-Chloro-3-methylphenol	100	16.6	56.7–113.4	49–122
2-Chlorophenol	100	27.0	54.1–110.2	38–126
2,4-Dichlorophenol	100	25.1	59.7–103.3	44–119
2,4-Dimethylphenol	100	33.3	50.4–100.0	24–118
4,6-Dinitro-2-methylphenol	100	25.0	42.4–123.6	30–136
2,4-Dinitrophenol	100	36.0	31.7–125.1	12–145
2-Nitrophenol	100	22.5	56.6–103.8	43–117
4-Nitrophenol	100	19.0	22.7–100.0	13–110
Pentachlorophenol	100	32.4	56.7–113.5	36–134
Phenol	100	14.1	32.4–100.0	23–108
2,4,6-Trichlorophenol	100	16.6	60.8–110.4	53–119

s—Standard deviation of four recovery measurements, in µg/L (Section 8.2.4).
$\bar{X}$—Average recovery for four recovery measurements, in µg/L (Section 8.2.4).
P, P_s—Percent recovery measured (Section 8.3.2, Section 8.4.2).

NOTE: These criteria are based directly upon the method performance data in Table 4. Where necessary, the limits for recovery have been broadened to assure applicability of the limits to concentrations below those used to develop Table 4.

TABLE 4—METHOD ACCURACY AND PRECISION AS FUNCTIONS OF CONCENTRATION—METHOD 604

Parameter	Accuracy, as recovery, X′ (µg/L)	Single Analyst precision, s_r' (µg/L)	Overall precision, S′ (µg/L)
4-Chloro-3-methylphenol	0.87C–1.97	0.11$\bar{X}$–0.21	0.16$\bar{X}$+1.41
2-Chlorophenol	0.83C–0.84	0.18$\bar{X}$+0.20	0.21$\bar{X}$+0.75
2,4-Dichlorophenol	0.81C+0.48	0.17$\bar{X}$–0.02	0.18$\bar{X}$+0.62
2,4-Dimethylphenol	0.62C–1.64	0.30$\bar{X}$–0.89	0.25$\bar{X}$+0.48
4,6-Dinitro-2-methylphenol	0.84C–1.01	0.15$\bar{X}$+1.25	0.19$\bar{X}$+5.85
2,4-Dinitrophenol	0.80C–1.58	0.27$\bar{X}$–1.15	0.29$\bar{X}$+4.51
2-Nitrophenol	0.81C–0.76	0.15$\bar{X}$+0.44	0.14$\bar{X}$+3.84
4-Nitrophenol	0.46C+0.18	0.17$\bar{X}$+2.43	0.19$\bar{X}$+4.79
Pentachlorophenol	0.83C+2.07	0.22$\bar{X}$–0.58	0.23$\bar{X}$+0.57
Phenol	0.43C+0.11	0.20$\bar{X}$–0.88	0.17$\bar{X}$+0.77
2,4,6-Trichlorophenol	0.86C–0.40	0.10$\bar{X}$+0.53	0.13$\bar{X}$+2.40

X′=Expected recovery for one or more measurements of a sample containing a concentration of C, in µg/L.
s_r'=Expected single analyst standard deviation of measurements at an average concentration found of $\bar{X}$, in µg/L.
S′=Expected interlaboratory standard deviation of measurements at an average concentration found of $\bar{X}$, in µg/L.
C=True value for the concentration, in µg/L.
$\bar{X}$=Average recovery found for measurements of samples containing a concentration of C, in µg/L.

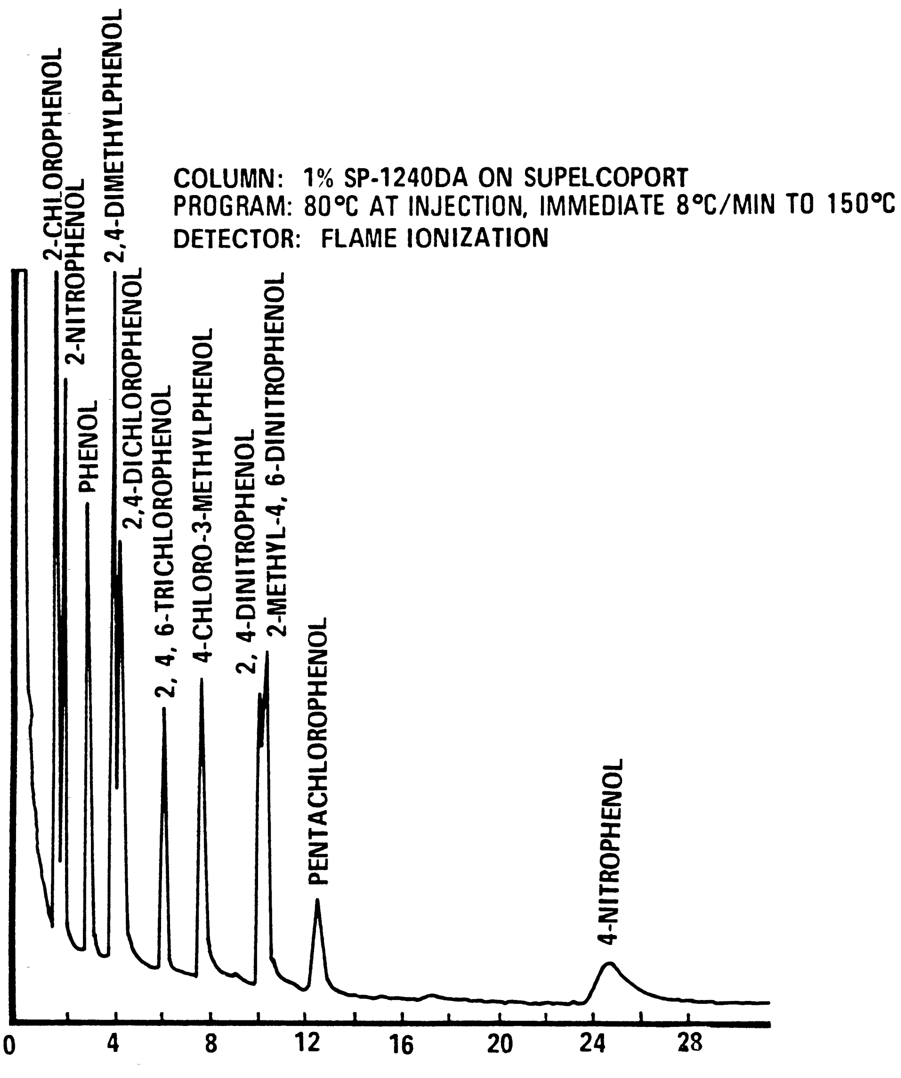

Figure 1. Gas chromatogram of phenols.

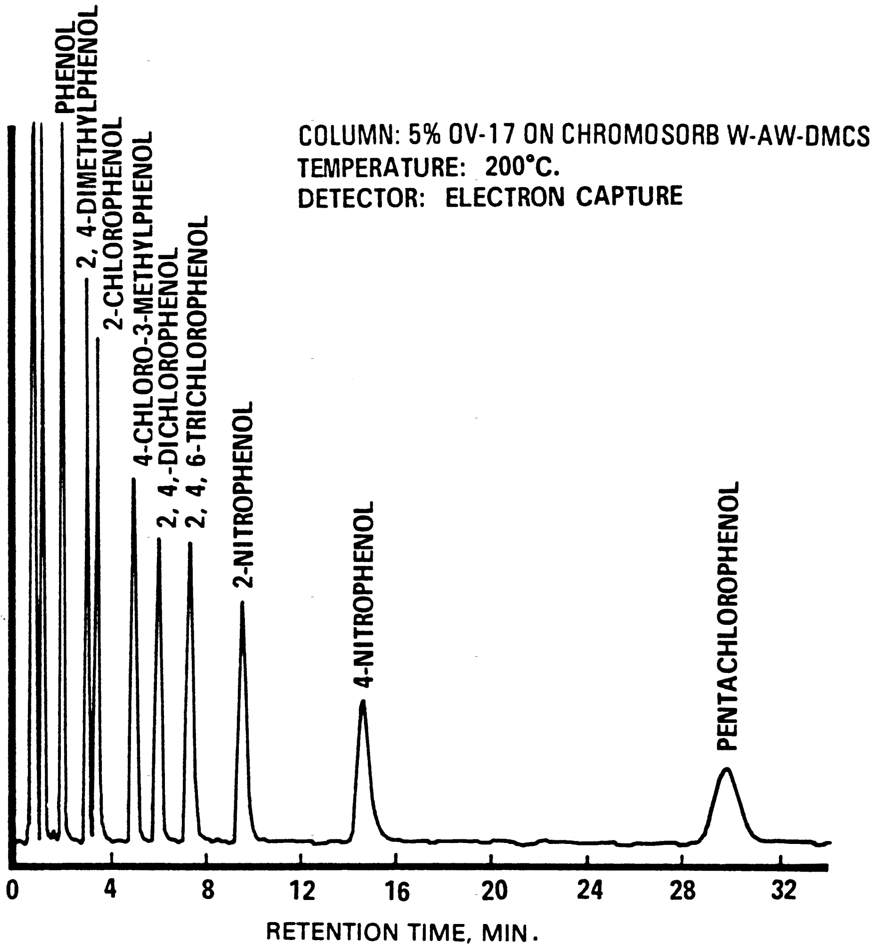

COLUMN: 5% OV-17 ON CHROMOSORB W-AW-DMCS
TEMPERATURE: 200°C.
DETECTOR: ELECTRON CAPTURE

Figure 2. Gas chromatogram of PFB derivatives of phenols.

METHOD 605—BENZIDINES

1. Scope and Application

1.1 This method covers the determination of certain benzidines. The following parameters can be determined by this method:

Parameter	Storet No	CAS No.
Benzidine	39120	92–87–5
3,3′-Dichlorobenzidine	34631	91–94–1

1.2 This is a high performance liquid chromatography (HPLC) method applicable to the determination of the compounds listed above in municipal and industrial discharges as provided under 40 CFR 136.1. When this method is used to analyze unfamiliar samples for the compounds above, identifications should be supported by at least one additional qualitative technique. This method describes electrochemical conditions at a second potential which can be used to confirm measurements made with this method. Method 625 provides gas chromatograph/mass spectrometer (GC/MS) conditions appropriate for the qualitative and quantitative confirmation of results for the parameters listed above, using the extract produced by this method.

1.3 The method detection limit (MDL, defined in Section 14.1)[1] for each parameter is listed in Table 1. The MDL for a specific wastewater may differ from those listed, depending upon the nature of the interferences in the sample matrix.

1.4 Any modification of this method, beyond those expressly permitted, shall be considered as a major modification subject to application and approval of alternate test procedures under 40 CFR 136.4 and 136.5.

1.5 This method is restricted to use by or under the supervision of analysts experienced in the use of HPLC instrumentation and in the interpretation of liquid chromatograms. Each analyst must demonstrate the ability to generate acceptable results with this method using the procedure described in Section 8.2.

2. Summary of Method

2.1 A measured volume of sample, approximately 1–L, is extracted with chloroform using liquid-liquid extractions in a separatory funnel. The chloroform extract is extracted with acid. The acid extract is then neutralized and extracted with chloroform. The final chloroform extract is exchanged to methanol while being concentrated using a rotary evaporator. The extract is mixed with buffer and separated by HPLC. The benzidine compounds are measured with an electrochemical detector.[2]

2.2 The acid back-extraction acts as a general purpose cleanup to aid in the elimination of interferences.

3. Interferences

3.1 Method interferences may be caused by contaminants in solvents, reagents, glassware, and other sample processing hardware that lead to discrete artifacts and/or elevated baselines in chromatograms. All of these materials must be routinely demonstrated to be free from interferences under the conditions of the analysis by running laboratory reagent blanks as described in Section 8.1.3.

3.1.1 Glassware must be scrupulously cleaned.[3] Clean all glassware as soon as possible after use by rinsing with the last solvent used in it. Solvent rinsing should be followed by detergent washing with hot water, and rinses with tap water and distilled water. The glassware should then be drained dry, and heated in a muffle furnace at 400 °C for 15 to 30 min. Some thermally stable materials may not be eliminated by this treatment. Solvent rinses with acetone and pesticide quality hexane may be substituted for the muffle furnace heating. Volumetric ware should not be heated in a muffle furnace. After drying and cooling, glassware should be sealed and stored in a clean environment to prevent any accumulation of dust or other contaminants. Store inverted or capped with aluminum foil.

3.1.2 The use of high purity reagents and solvents helps to minimize interference problems. Purification of solvents by distillation in all-glass systems may be required.

3.2 Matrix interferences may be caused by contaminants that are co-extracted from the sample. The extent of matrix interferences will vary considerably from source to source, depending upon the nature and diversity of the industrial complex or municipality being sampled. The cleanup procedures that are inherent in the extraction step are used to overcome many of these interferences, but unique samples may require additional cleanup approaches to achieve the MDL listed in Table 1.

3.3 Some dye plant effluents contain large amounts of components with retention times closed to benzidine. In these cases, it has been found useful to reduce the electrode potential in order to eliminate interferences and still detect benzidine. (See Section 12.7.)

4. Safety

4.1 The toxicity or carcinogenicity of each reagent used in this method has not been precisely defined; however, each chemical compound should be treated as a potential health harzard. From this viewpoint, exposure to these chemicals must be reduced to the lowest possible level by whatever means available. The laboratory is responsible for maintaining a current awareness file of OSHA regulations regarding the safe handling of the chemicals specified in this method. A reference file of material data handling sheets should also be made available to all personnel involved in the chemical analysis. Additional references to laboratory safety are available and have been identified[4,6] for the information of the analyst.

4.2 The following parameters covered by this method have been tentatively classified as known or suspected, human or mammalian carcinogens: benzidine and 3,3′-dichlorobenzidine. Primary standards of these toxic compounds should be prepared in a hood. A NIOSH/MESA approved toxic gas respirator should be worn when the analyst handles high concentrations of these toxic compounds.

4.3 Exposure to chloroform should be minimized by performing all extractions and extract concentrations in a hood or other well-ventiliated area.

5. Apparatus and Materials

5.1 Sampling equipment, for discrete or composite sampling.

5.1.1 Grab sample bottle—1–L or 1-qt, amber glass, fitted with a screw cap lined with Teflon. Foil may be substituted for Teflon if the sample is not corrosive. If amber bottles are not available, protect samples from light. The bottle and cap liner must be washed, rinsed with acetone or methylene chloride, and dried before use to minimize contamination.

5.1.2 Automatic sampler (optional)—The sampler must incorporate glass sample containers for the collection of a minimum of 250 mL of sample. Sample containers must be kept refrigerated at 4°C and protected from light during compositing. If the sampler uses a peristaltic pump, a minimum length of compressible silicone rubber tubing may be used. Before use, however, the compressible tubing should be thoroughly rinsed with methanol, followed by repeated rinsings with distilled water to minimize the potential for contamination of the sample. An integrating flow meter is required to collect flow proportional composites.

5.2 Glassware (All specifications are suggested):

5.2.1 Separatory funnels—2000, 1000, and 250-mL, with Teflon stopcock.

5.2.2 Vials—10 to 15-mL, amber glass, with Teflon-lined screw cap.

5.2.3 Rotary evaporator.

5.2.4 Flasks—Round bottom, 100–mL, with 24/40 joints.

5.2.5 Centrifuge tubes—Conical, graduated, with Teflon-lined screw caps.

5.2.6 Pipettes—Pasteur, with bulbs.

5.3 Balance—Analytical, capable of accurately weighing 0.0001 g.

5.4 High performance liquid chromatograph (HPLC)—An analytical system complete with column supplies, high pressure syringes, detector, and compatible recorder. A data system is recommended for measuring peak areas and retention times.

5.4.1 Solvent delivery system—With pulse damper, Altex 110A or equivalent.

5.4.2 Injection valve (optional)—Waters U6K or equivalent.

5.4.3 Electrochemical detector—Bioanalytical Systems LC–2A with glassy carbon electrode, or equivalent. This detector has proven effective in the analysis of wastewaters for the parameters listed in the scope (Section 1.1), and was used to develop the method performance statements in Section 14. Guidelines for the use of alternate detectors are provided in Section 12.1.

5.4.4 Electrode polishing kit—Princeton Applied Research Model 9320 or equivalent.

5.4.5 Column—Lichrosorb RP–2, 5 micron particle diameter, in a 25 cm × 4.6 mm ID stainless steel column. This column was used to develop the method performance statements in Section 14. Guidelines for the use of alternate column packings are provided in Section 12.1.

6. Reagents

6.1 Reagent water—Reagent water is defined as a water in which an interferent is not observed at the MDL of the parameters of interest.

6.2 Sodium hydroxide solution (5 N)—Dissolve 20 g of NaOH (ACS) in reagent water and dilute to 100 mL.

6.3 Sodium hydroxide solution (1 M)—Dissolve 40 g of NaOH (ACS) in reagent water and dilute to 1 L.

6.4 Sodium thiosulfate—(ACS) Granular.

6.5 Sodium tribasic phosphate (0.4 M)—Dissolve 160 g of trisodium phosphate decahydrate (ACS) in reagent water and dilute to 1 L.

6.6 Sulfuric acid (1+1)—Slowly, add 50 mL of H_2SO_4 (ACS, sp. gr. 1.84) to 50 mL of reagent water.

6.7 Sulfuric acid (1 M)—Slowly, add 58 mL of H_2SO_4 (ACS, sp. gr. 1.84) to reagent water and dilute to 1 L.

6.8 Acetate buffer (0.1 M, pH 4.7)—Dissolve 5.8 mL of glacial acetic acid (ACS) and 13.6 g of sodium acetate trihydrate (ACS) in reagent water which has been purified by filtration through a RO–4 Millipore System or equivalent and dilute to 1 L.

6.9 Acetonitrile, chloroform (preserved with 1% ethanol), methanol—Pesticide quality or equivalent.

6.10 Mobile phase—Place equal volumes of filtered acetonitrile (Millipore type FH filter or equivalent) and filtered acetate buffer (Millipore type GS filter or equivalent) in a narrow-mouth, glass container and mix thoroughly. Prepare fresh weekly. Degas daily by sonicating under vacuum, by heating and stirring, or by purging with helium.

6.11 Stock standard solutions (1.00 μg/μL)—Stock standard solutions may be prepared from pure standard materials or purchased as certified solutions.

6.11.1 Prepare stock standard solutions by accurately weighing about 0.0100 g of pure material. Dissolve the material in methanol and dilute to volume in a 10–mL volumetric flask. Larger volumes can be used at the convenience of the analyst. When compound purity is assayed to be 96% or greater, the weight can be used without correction to calculate the concentration of the stock standard. Commercially prepared stock standards can be used at any concentration if they are certified by the manufacturer or by an independent source.

6.11.2 Transfer the stock standard solutions into Teflon-sealed screw-cap bottles. Store at 4 °C and protect from light. Stock standard solutions should be checked frequently for signs of degradation or evaporation, especially just prior to preparing calibration standards from them.

6.11.3 Stock standard solutions must be replaced after six months, or sooner if comparison with check standards indicates a problem.

6.12 Quality control check sample concentrate—See Section 8.2.1.

7. Calibration

7.1 Establish chromatographic operating conditions equivalent to those given in Table 1. The HPLC system can be calibrated using the external standard technique (Section 7.2) or the internal standard technique (Section 7.3).

7.2 External standard calibration procedure:

7.2.1 Prepare calibration standards at a minimum of three concentration levels for each parameter of interest by adding volumes of one or more stock standards to a volumetric flask and diluting to volume with mobile phase. One of the external standards should be at a concentration near, but above, the MDL (Table 1) and the other concentrations should correspond to the expected range of concentrations found in real samples or should define the working range of the detector.

7.2.2 Using syringe injections of 5 to 25 µL or a constant volume injection loop, analyze each calibration standard according to Section 12 and tabulate peak height or area responses against the mass injected. The results can be used to prepare a calibration curve for each compound. Alternatively, if the ratio of response to amount injected (calibration factor) is a constant over the working range (<10% relative standard deviation, RSD), linearity through the origin can be assumed and the average ratio or calibration factor can be used in place of a calibration curve.

7.3 Internal standard calibration procedure—To use this approach, the analyst must select one or more internal standards that are similar in analytical behavior to the compounds of interest. The analyst must further demonstrate that the measurement of the internal standard is not affected by method or matrix interferences. Because of these limitations, no internal standard can be suggested that is applicable to all samples.

7.3.1 Prepare calibration standards at a minimum of three concentration levels for each parameter of interest by adding volumes of one or more stock standards to a volumetric flask. To each calibration standard, add a known constant amount of one or more internal standards, and dilute to volume with mobile phase. One of the standards should be at a concentration near, but above, the MDL and the other concentrations should correspond to the expected range of concentrations found in real samples or should define the working range of the detector.

7.3.2 Using syringe injections of 5 to 25 µL or a constant volume injection loop, analyze each calibration standard according to Section 12 and tabulate peak height or area responses against concentration for each compound and internal standard. Calculate response factors (RF) for each compound using Equation 1.

$$RF = (A_s)(C_{is} (A_{is})(C_s)$$

Equation 1

where:

A_s=Response for the parameter to be measured.

A_{is}=Response for the internal standard.

C_{is}=Concentration of the internal standard (µg/L).

C_s=Concentration of the parameter to be measured (µg/L).

If the RF value over the working range is a constant (<10% RSD), the RF can be assumed to be invariant and the average RF can be used for calculations. Alternatively, the results can be used to plot a calibration curve of response ratios, A_s/A_{is}, vs. RF.

7.4 The working calibration curve, calibration factor, or RF must be verified on each working day by the measurement of one or more calibration standards. If the response for any parameter varies from the predicted response by more than ±15%, a new calibration curve must be prepared for that compound. If serious loss of response occurs, polish the electrode and recalibrate.

7.5 Before using any cleanup procedure, the analyst must process a series of calibration standards through the procedure to validate elution patterns and the absence of interferences from the reagents.

8. Quality Control

8.1 Each laboratory that uses this method is required to operate a formal quality control program. The minimum requirements of this program consist of an initial demonstration of laboratory capability and an ongoing analysis of spiked samples to evaluate and document data quality. The laboratory must maintain records to document the quality of data that is generated. Ongoing data quality checks are compared with established performance criteria to determine if the results of analyses meet the performance characteristics of the method. When results of sample spikes indicate atypical method performance, a quality control check standard must be analyzed to confirm that the measurements were performed in an in-control mode of operation.

8.1.1 The analyst must make an initial, one-time, demonstration of the ability to generate acceptable accuracy and precision with this method. This ability is established as described in Section 8.2.

8.1.2 In recognition of advances that are occurring in chromatography, the analyst is permitted certain options (detailed in Sections 10.9, 11.1, and 12.1) to improve the separations or lower the cost of measurements. Each time such a modification is made to the method, the analyst is required to repeat the procedure in Section 8.2.

8.1.3 Before processing any samples, the analyst must analyze a reagent water blank to demonstrate that interferences from the analytical system and glassware are under control. Each time a set of samples is extracted or reagents are changed, a reagent water blank must be processed as a safeguard against laboratory contamination.

8.1.4 The laboratory must, on an ongoing basis, spike and analyze a minimum of 10% of all samples to monitor and evaluate laboratory data quality. This procedure is described in Section 8.3.

8.1.5 The laboratory must, on an ongoing basis, demonstrate through the analyses of quality control check standards that the operation of the measurement system is in control. This procedure is described in Section 8.4. The frequency of the check standard analyses is equivalent to 10% of all samples analyzed but may be reduced if spike recoveries from samples (Section 8.3) meet all specified quality control criteria.

8.1.6 The laboratory must maintain performance records to document the quality of data that is generated. This procedure is described in Section 8.5.

8.2 To establish the ability to generate acceptable accuracy and precision, the analyst must perform the following operations.

8.2.1 A quality control (QC) check sample concentrate is required containing benzidine and/or 3,3′-dichlorobenzidine at a concentration of 50 µg/mL each in methanol. The QC check sample concentrate must be obtained from the U.S. Environmental Protection Agency, Environmental Monitoring and Support Laboratory in Cincinnati, Ohio, if available. If not available from that source, the QC check sample concentrate must be obtained from another external source. If not available from either source above, the QC check sample concentrate must be prepared by the laboratory using stock standards prepared independently from those used for calibration.

8.2.2 Using a pipet, prepare QC check samples at a concentration of 50 µg/L by adding 1.00 mL of QC check sample concentrate to each of four 1–L-L aliquots of reagent water.

8.2.3 Analyze the well-mixed QC check samples according to the method beginning in Section 10.

8.2.4 Calculate the average recovery ($\bar{X}$) in µg/L, and the standard deviation of the recovery (s) in µg/L, for each parameter using the four results.

8.2.5 For each parameter compare s and $\bar{X}$ with the corresponding acceptance criteria for precision and accuracy, respectively, found in Table 2. If s and $\bar{X}$ for all parameters of interest meet the acceptance criteria, the system performance is acceptable and analysis of actual samples can begin. If any individual s exceeds the precision limit or any individual $\bar{X}$ falls outside the range for accuracy, the system performance is unacceptable for that parameter. Locate and correct the source of the problem and repeat the test for all parameters of interest beginning with Section 8.2.2.

8.3 The laboratory must, on an ongoing basis, spike at least 10% of the samples from each sample site being monitored to assess accuracy. For laboratories analyzing one to ten samples per month, at least one spiked sample per month is required.

8.3.1 The concentration of the spike in the sample should be determined as follows:

8.3.1.1 If, as in compliance monitoring, the concentration of a specific parameter in the sample is being checked against a regulatory concentration limit, the spike should be at that limit or 1 to 5 times higher than the background concentration determined in Section 8.3.2, whichever concentration would be larger.

8.3.1.2 If the concentration of a specific parameter in the sample is not being checked against a limit specific to that parameter, the spike should be at 50 µg/L or 1 to 5 times higher than the background concentration determined in Section 8.3.2, whichever concentration would be larger.

8.3.1.3 If it is impractical to determine background levels before spiking (e.g., maximum holding times will be exceeded), the spike concentration should be (1) the regulatory concentration limit, if any; or, if none (2) the larger of either 5 times higher than the expected background concentration or 50 µg/L.

8.3.2 Analyze one sample aliquot to determine the background concentration (B) of each parameter. If necessary, prepare a new QC check sample concentrate (Section 8.2.1) appropriate for the background concentrations in the sample. Spike a second sample aliquot with 1.0 mL of the QC check sample concentrate and analyze it to determine the concentration after spiking (A) of each parameter. Calculate each percent recovery (P) as $100(A-B)\%/T$, where T is the known true value of the spike.

8.3.3 Compare the percent recovery (P) for each parameter with the corresponding QC acceptance criteria found in Table 2. These acceptance criteria were calculated to include an allowance for error in measurement of both the background and spike concentrations, assuming a spike to background ratio of 5:1. This error will be accounted for to the extent that the analyst's spike to background ratio approaches 5:1.[7] If spiking was performed at a concentration lower than 50 µg/L, the analyst must use either the QC acceptance criteria in Table 2, or optional QC acceptance criteria calculated for the specific spike concentration. To calculate optional acceptance criteria for the recovery of a parameter: (1) Calculate accuracy (X′) using the equation in Table 3, substituting the spike concentration (T) for C; (2) calculate overall precision (S′) using the equation in Table 3, substituting X′ for $\bar{X}$; (3) calculate the range for recovery at the spike concentration as $(100\ X'/T) \pm 2.44(100\ S'/T)\%$.[7]

8.3.4 If any individual P falls outside the designated range for recovery, that parameter has failed the acceptance criteria. A check standard containing each parameter that failed the criteria must be analyzed as described in Section 8.4.

8.4 If any parameter fails the acceptance criteria for recovery in Section 8.3, a QC check standard containing each parameter that failed must be prepared and analyzed.

NOTE: The frequency for the required analysis of a QC check standard will depend upon the number of parameters being simultaneously tested, the complexity of the sample matrix, and the performance of the laboratory.

8.4.1 Prepare the QC check standard by adding 1.0 mL of QC check sample concentrate (Sections 8.2.1 or 8.3.2) to 1 L of reagent water. The QC check standard needs only to contain the parameters that failed criteria in the test in Section 8.3.

8.4.2 Analyze the QC check standard to determine the concentration measured (A) of each parameter. Calculate each percent recovery (P_s) as 100 (A/T)%, where T is the true value of the standard concentration.

8.4.3 Compare the percent recovery (P_s) for each parameter with the corresponding QC acceptance criteria found in Table 2. Only parameters that failed the test in Section 8.3 need to be compared with these criteria. If the recovery of any such parameter falls outside the designated range, the laboratory performance for that parameter is judged to be out of control, and the problem must be immediately identified and corrected. The analytical result for that parameter in the unspiked sample is suspect and may not be reported for regulatory compliance purposes.

8.5 As part of the QC program for the laboratory, method accuracy for wastewater samples must be assessed and records must be maintained. After the analysis of five spiked wastewater samples as in Section 8.3, calculate the average percent recovery ($\bar{P}$) and the standard deviation of the percent recovery (s_p). Express the accuracy assessment as a percent recovery interval from $\bar{P}-2s_p$ to $\bar{P}+2s_p$. If $\bar{P}$=90% and s_p=10%, for example, the accuracy interval is expressed as 70–110%. Update the accuracy assessment for each parameter on a regular basis (e.g. after each five to ten new accuracy measurements).

8.6 It is recommended that the laboratory adopt additional quality assurance practices for use with this method. The specific practices that are most productive depend upon the needs of the laboratory and the nature of the samples. Field duplicates may be analyzed to assess the precision of the environmental measurements. When doubt exists over the identification of a peak on the chromatogram, confirmatory techniques such as HPLC with a dissimilar column, gas chromatography, or mass spectrometer must be used. Whenever possible, the laboratory should analyze standard reference materials and participate in relevant performance evaluation studies.

9. Sample Collection, Preservation, and Handling

9.1 Grab samples must be collected in glass containers. Conventional sampling practices[8] should be followed, except that the bottle must not be prerinsed with sample before collection. Composite samples should be collected in refrigerated glass containers in accordance with the requirements of the program. Automatic sampling equipment must be as free as possible of Tygon tubing and other potential sources of contamination.

9.2 All samples must be iced or refrigerated at 4°C and stored in the dark from the time of collection until extraction. Both benzidine and 3,3′-dichlorobenzidine are easily oxidized. Fill the sample bottles and, if residual chlorine is present, add 80 mg of sodium thiosulfate per liter of sample and mix well. EPA Methods 330.4 and 330.5 may be used for measurement of residual chlorine.[9] Field test kits are available for this purpose. After mixing, adjust the pH of the sample to a range of 2 to 7 with sulfuric acid.

9.3 If 1,2-diphenylhydrazine is likely to be present, adjust the pH of the sample to 4.0 ±0.2 to prevent rearrangement to benzidine.

9.4 All samples must be extracted within 7 days of collection. Extracts may be held up to 7 days before analysis, if stored under an inert (oxidant free) atmosphere.[2] The extract should be protected from light.

10. Sample Extraction

10.1 Mark the water meniscus on the side of the sample bottle for later determination of sample volume. Pour the entire sample into a 2–L separatory funnel. Check the pH of the sample with wide-range pH paper and adjust to within the range of 6.5 to 7.5 with sodium hydroxide solution or sulfuric acid.

10.2 Add 100 mL of chloroform to the sample bottle, seal, and shake 30 s to rinse the inner surface. (Caution: Handle chloroform in a well ventilated area.) Transfer the solvent to the separatory funnel and extract the sample by shaking the funnel for 2 min with periodic venting to release excess pressure. Allow the organic layer to separate from the water phase for a minimum of 10 min. If the emulsion interface between layers is more than one-third the volume of the solvent layer, the analyst must employ mechanical techniques to complete the phase separation. The optimum technique depends upon the sample, but may include stirring, filtration of the emulsion through glass wool, centrifugation, or other physical methods. Collect the chloroform extract in a 250-mL separatory funnel.

10.3 Add a 50-mL volume of chloroform to the sample bottle and repeat the extraction procedure a second time, combining the extracts in the separatory funnel. Perform a third extraction in the same manner.

10.4 Separate and discard any aqueous layer remaining in the 250-mL separatory funnel after combining the organic extracts. Add 25 mL of 1 M sulfuric acid and extract the sample by shaking the funnel for 2 min. Transfer the aqueous layer to a 250-mL beaker. Extract with two additional 25-mL portions of 1 M sulfuric acid and combine the acid extracts in the beaker.

10.5 Place a stirbar in the 250-mL beaker and stir the acid extract while carefully adding 5 mL of 0.4 M sodium tribasic phosphate. While monitoring with a pH meter, neutralize the extract to a pH between 6 and 7 by dropwise addition of 5 N sodium hydroxide solution while stirring the solution vigorously. Approximately 25 to 30 mL of 5 N sodium hydroxide solution will be required and it should be added over at least a 2-min period. Do not allow the sample pH to exceed 8.

10.6 Transfer the neutralized extract into a 250-mL separatory funnel. Add 30 mL of chloroform and shake the funnel for 2 min. Allow the phases to separate, and transfer the organic layer to a second 250-mL separatory funnel.

10.7 Extract the aqueous layer with two additional 20-mL aliquots of chloroform as before. Combine the extracts in the 250-mL separatory funnel.

10.8 Add 20 mL of reagent water to the combined organic layers and shake for 30 s.

10.9 Transfer the organic extract into a 100-mL round bottom flask. Add 20 mL of methanol and concentrate to 5 mL with a rotary evaporator at reduced pressure and 35 °C. An aspirator is recommended for use as the source of vacuum. Chill the receiver with ice. This operation requires approximately 10 min. Other concentration techniques may be used if the requirements of Section 8.2 are met.

10.10 Using a 9-in. Pasteur pipette, transfer the extract to a 15-mL, conical, screw-cap centrifuge tube. Rinse the flask, including the entire side wall, with 2-mL portions of methanol and combine with the original extract.

10.11 Carefully concentrate the extract to 0.5 mL using a gentle stream of nitrogen while heating in a 30 °C water bath. Dilute to 2 mL with methanol, reconcentrate to 1 mL, and dilute to 5 mL with acetate buffer. Mix the extract thoroughly. Cap the centrifuge tube and store refrigerated and protected from light if further processing will not be performed immediately. If the extract will be stored longer than two days, it should be transferred to a Teflon-sealed screw-cap vial. If the sample extract requires no further cleanup, proceed with HPLC analysis (Section 12). If the sample requires further cleanup, proceed to Section 11.

10.12 Determine the original sample volume by refilling the sample bottle to the mark and transferring the liquid to a 1,000-mL graduated cylinder. Record the sample volume to the nearest 5 mL.

11. Cleanup and Separation

11.1 Cleanup procedures may not be necessary for a relatively clean sample matrix. If particular circumstances demand the use of a cleanup procedure, the analyst first must demonstrate that the requirements of Section 8.2 can be met using the method as revised to incorporate the cleanup procedure.

12. High Performance Liquid Chromatography

12.1 Table 1 summarizes the recommended operating conditions for the HPLC. Included in this table are retention times, capacity factors, and MDL that can be achieved under these conditions. An example of the separations achieved by this HPLC column is shown in Figure 1. Other HPLC columns, chromatographic conditions, or detectors may be used if the requirements of Section 8.2 are met. When the HPLC is idle, it is advisable to maintain a 0.1 mL/min flow through the column to prolong column life.

12.2 Calibrate the system daily as described in Section 7.

12.3 If the internal standard calibration procedure is being used, the internal standard must be added to the sample extract and mixed thoroughly immediately before injection into the instrument.

12.4 Inject 5 to 25 µL of the sample extract or standard into the HPLC. If constant volume injection loops are not used, record the volume injected to the nearest 0.05 µL, and the resulting peak size in area or peak height units.

12.5 Identify the parameters in the sample by comparing the retention times of the peaks in the sample chromatogram with those of the peaks in standard chromatograms. The width of the retention time window used to make identifications should be based upon measurements of actual retention time variations of standards over the course of a day. Three times the standard deviation of a retention time for a compound can be used to calculate a suggested window size; however, the experience of the analyst should weigh heavily in the interpretation of chromatograms.

12.6 If the response for a peak exceeds the working range of the system, dilute the extract with mobile phase and reanalyze.

12.7 If the measurement of the peak response for benzidine is prevented by the presence of interferences, reduce the electrode potential to +0.6 V and reanalyze. If the benzidine peak is still obscured by interferences, further cleanup is required.

13. Calculations

13.1 Determine the concentration of individual compounds in the sample.

13.1.1 If the external standard calibration procedure is used, calculate the amount of material injected from the peak response using the calibration curve or calibration factor determined in Section 7.2.2. The concentration in the sample can be calculated from Equation 2.

$$\text{Concentration } (\mu g/L) = \frac{(A)(V_t)}{(V_i)(V_s)}$$

Equation 2

where:

A=Amount of material injected (ng).

V_i=Volume of extract injected (µL).

V_t=Volume of total extract (µL).

V_s=Volume of water extracted (mL).

13.1.2 If the internal standard calibration procedure is used, calculate the concentration in the sample using the response factor (RF) determined in Section 7.3.2 and Equation 3.

$$\text{Concentration } (\mu g/L) = \frac{(A_s)(I_s)}{(A_{is})(RF)(V_o)}$$

Equation 3

where:

A_s=Response for the parameter to be measured.

A_{is}=Response for the internal standard.

I_s=Amount of internal standard added to each extract (µg).

V_o=Volume of water extracted (L).

13.2 Report results in µg/L without correction for recovery data. All QC data obtained should be reported with the sample results.

14. Method Performance

14.1 The method detection limit (MDL) is defined as the minimum concentration of a substance that can be measured and reported with 99% confidence that the value is above zero.[1] The MDL concentrations listed in Table 1 were obtained using reagent water.[10] Similar results were achieved using representative wastewaters. The MDL actually achieved in a given analysis will vary depending on instrument sensitivity and matrix effects.

14.2 This method has been tested for linearity of spike recovery from reagent water and has been demonstrated to be applicable over the concentration range from 7×MDL to 3000×MDL.[10]

14.3 This method was tested by 17 laboratories using reagent water, drinking water, surface water, and three industrial wastewaters spiked at six concentrations over the range 1.0 to 70 µg/L.[11] Single operator precision, overall precision, and method accuracy were found to be directly related to the concentration of the parameter and essentially independent of the sample matrix. Linear equations to describe these relationships are presented in Table 3.

References

1. 40 CFR part 136, appendix B.

2. ''Determination of Benzidines in Industrial and Muncipal Wastewaters,'' EPA 600/4–82–022, National Technical Information Service, PB82–196320, Springfield, Virginia 22161, April 1982.

3. ASTM Annual Book of Standards, Part 31, D3694–78. ''Standard Practices for Preparation of Sample Containers and for Preservation of Organic Constituents,'' American Society for Testing and Materials, Philadelphia.

4. ''Carcinogens—Working With Carcinogens,'' Department of Health, Education, and Welfare, Public Health Service, Center for Disease Control, National Institute for Occupational Safety and Health, Publication No. 77–206, August 1977.

5. ''OSHA Safety and Health Standards, General Industry,'' (29 CFR part 1910), Occupational Safety and Health Administration, OSHA 2206 (Revised, January 1976).

6. ''Safety in Academic Chemistry Laboratories,'' American Chemical Society Publication, Committee on Chemical Safety, 3rd Edition, 1979.

7. Provost, L.P., and Elder, R.S. ''Interpretation of Percent Recovery Data,'' *American* Laboratory, 15, 58–63 (1983). (The value 2.44 used in the equation in Section 8.3.3 is two times the value 1.22 derived in this report.)

8. ASTM Annual Book of Standards, Part 31, D3370–76. ''Standard Practices for Sampling Water,'' American Society for Testing and Materials, Philadelphia.

9. ''Methods 330.4 (Titrimetric, DPD-FAS) and 330.5 (Spectrophotometric, DPD) for Chlorine Total Residual,'' Methods for Chemical Analysis of Water and Wastes, EPA–600/4–79–020, U.S. Environmental Protection Agency, Environmental Monitoring and Support Laboratory, Cincinnati, Ohio 45268, March 1979.

10. ''EPA Method Study 15, Method 605 (Benzidines),'' EPA 600/4–84–062, National Technical Information Service, PB84–211176, Springfield, Virginia 22161, June 1984.

11. ''EPA Method Validation Study 15, Method 605 (Benzidines),'' Report for EPA Contract 68–03–2624 (In preparation).

TABLE 1—CHROMATOGRAPHIC CONDITIONS AND METHOD DETECTION LIMITS

Parameter	Retention time (min)	Column capacity factor (k′)	Method detection limit (µg/L)
Benzidine	6.1	1.44	0.08
3,3′-Dichlorobenzidine	12.1	3.84	0.13

HPLC Column conditions: Lichrosorb RP–2, 5 micron particle size, in a 25 cm×4.6 mm ID stainless steel column. Mobile Phase: 0.8 mL/min of 50% acetonitrile/50% 0.1M pH 4.7 acetate buffer. The MDL were determined using an electrochemical detector operated at +0.8 V.

TABLE 2—QC ACCEPTANCE CRITERIA—METHOD 605

Parameter	Test conc. (µg/L)	Limit for s (µg/L)	Range for $\bar{X}$ (µg/L)	Range for P, P_s (percent)
Benzidine	50	18.7	9.1–61.0	D–140
3.3′-Dichlorobenzidine	50	23.6	18.7–50.0	5–128

s=Standard deviation of four recovery measurements, in µg/L (Section 8.2.4).
$\bar{X}$=Average recovery for four recovery measurements, in µg/L (Section 8.2.4).
P, P_s=Percent recovery measured (Section 8.3.2, Section 8.4.2).
D=Detected; result must be greater than zero.

Note: These criteria are based directly upon the method performance data in Table 3. Where necessary, the limits for recovery have been broadened to assure applicability of the limits to concentrations below those used to develop Table 3.

TABLE 3—METHOD ACCURACY AND PRECISION AS FUNCTIONS OF CONCENTRATION—METHOD 605

Parameter	Accuracy, as recovery, X'(µg/L)	Single analyst precision, s_r' (µg/L)	Overall precision, S' (µg/L)
Benzidine	0.70C+0.06	$0.28\bar{X}+0.19$	$0.40\bar{X}+0.18$
3,3′-Dichlorobenzidine	0.66C+0.23	$0.39\bar{X}-0.05$	$0.38\bar{X}+0.02$

X'=Expected recovery for one or more measurements of a sample containing a concentration of C, in µg/L.
s_r'=Expected single analyst standard deviation of measurements at an average concentration found of $\bar{X}$, in µg/L.
S'=Expected interlaboratory standard deviation of measurements at an average concentration found of $\bar{X}$, in µg/L.
C=True value for the concentration, in µg/L.
$\bar{X}$=Average recovery found for measurements of samples containing a concentration of C, in µg/L.

COLUMN: LICHROSORB RP-2
MOBILE PHASE: 50% ACETONITRILE IN ACETATE BUFFER
DETECTOR: ELECTROCHEMICAL AT + 0.8 V

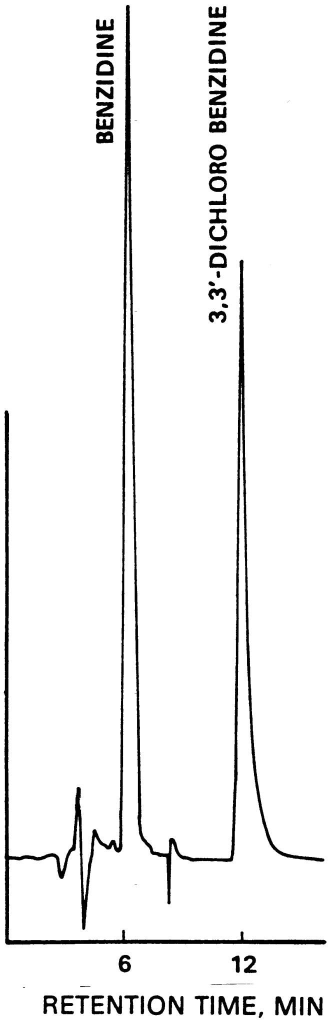

Figure 1. Liquid chromatogram of benzidines.

METHOD 606—PHTHALATE ESTER

1. Scope and Application

1.1 This method covers the determination of certain phthalate esters. The following parameters can be determined by this method:

Parameter	STORET No.	CAS No.
Bis(2-ethylhexyl) phthalate	39100	117–81–7
Butyl benzyl phthalate	34292	85–68–7
Di-n-butyl phthalate	39110	84–74–2
Diethyl phthalate	34336	84–66–2
Dimethyl phthalate	34341	131–11–3
Di-n-octyl phthalate	34596	117–84–0

1.2 This is a gas chromatographic (GC) method applicable to the determination of the compounds listed above in municipal and industrial discharges as provided under 40 CFR 136.1. When this method is used to analyze unfamiliar samples for any or all of the compounds above, compound identifications should be supported by at least one additional qualitative technique. This method describes analytical conditions for a second gas chromatographic column that can be used to confirm measurements made with the primary column. Method 625 provides gas chromatograph/mass spectrometer (GC/MS) conditions appropriate for the qualitative and quantitative confirmation of results for all of the parameters listed above, using the extract produced by this method.

1.3 The method detection limit (MDL, defined in Section 14.1)[1] for each parameter is listed in Table 1. The MDL for a specific wastewater may differ from those listed, depending upon the nature of interferences in the sample matrix.

1.4 The sample extraction and concentration steps in this method are essentially the same as in Methods 608, 609, 611, and 612. Thus, a single sample may be extracted to measure the parameters included in the scope of each of these methods. When cleanup is required, the concentration levels must be high enough to permit selecting aliquots, as necessary, to apply appropriate cleanup procedures. The analyst is allowed the latitude, under Section 12, to select chromatographic conditions appropriate for the simultaneous measurement of combinations of these parameters.

1.5 Any modification of this method, beyond those expressly permitted, shall be considered as a major modification subject to application and approval of alternate test procedures under 40 CFR 136.4 and 136.5.

1.6 This method is restricted to use by or under the supervision of analysts experienced in the use of a gas chromatograph and in the interpretation of gas chromatograms. Each analyst must demonstrate the ability to generate acceptable results with this method using the procedure described in Section 8.2.

2. Summary of Method

2.1 A measured volume of sample, approximately 1–L, is extracted with methylene chloride using a separatory funnel. The methylene chloride extract is dried and exchanged to hexane during concentration to a volume of 10 mL or less. The extract is separated by gas chromatography and the phthalate esters are then measured with an electron capture detector.[2]

2.2 Analysis for phthalates is especially complicated by their ubiquitous occurrence in the environment. The method provides Florisil and alumina column cleanup procedures to aid in the elimination of interferences that may be encountered.

3. Interferences

3.1 Method interferences may be caused by contaminants in solvents, reagents, glassware, and other sample processing hardware that lead to discrete artifacts and/or elevated baselines in gas chromatograms. All of these materials must be routinely demonstrated to be free from interferences under the conditions of the analysis by running laboratory reagent blanks as described in Section 8.1.3.

3.1.1 Glassware must be scrupulously cleaned.[3] Clean all glassware as soon as possible after use by rinsing with the last solvent used in it. Solvent rinsing should be followed by detergent washing with hot water, and rinses with tap water and distilled water. The glassware should then be drained dry, and heated in a muffle furnace at 400 °C for 15 to 30 min. Some thermally stable materials, such as PCBs, may not be eliminated by this treatment. Solvent rinses with acetone and pesticide quality hexane may be substituted for the muffle furnace heating. Thorough rinsing with such solvents usually eliminates PCB interference. Volumetric ware should not be heated in a muffle furnace. After drying and cooling, glassware should be sealed and stored in a clean environment to prevent any accumulation of dust or other contaminants. Store inverted or capped with aluminum foil.

3.1.2 The use of high purity reagents and solvents helps to minimize interference problems. Purification of solvents by distillation in all-glass systems may be required.

3.2 Phthalate esters are contaminants in many products commonly found in the laboratory. It is particularly important to avoid the use of plastics because phthalates are commonly used as plasticizers and are easily extracted from plastic materials. Serious phthalate contamination can result at any time, if consistent quality control is not practiced. Great care must be experienced to prevent such contamination. Exhaustive cleanup of reagents and glassware may be required to eliminate background phthalate contamination.[4,5]

3.3 Matrix interferences may be caused by contaminants that are co-extracted from the sample. The extent of matrix interferences will vary considerably from source to source, depending upon the nature and diversity of the industrial complex or municipality being sampled. The cleanup procedures in Section 11 can be used to overcome many of these interferences, but unique samples may require additional cleanup approaches to achieve the MDL listed in Table 1.

4. Safety

4.1 The toxicity or carcinogenicity of each reagent used in this method has not been precisely defined; however, each chemical compound should be treated as a potential health hazard. From this viewpoint, exposure to these chemicals must be reduced to the lowest possible level by whatever means available. The laboratory is responsible for maintaining a current awareness file of OSHA regulations regarding the safe handling of the chemicals specified in this method. A reference file of material data handling sheets should also be made available to all personnel involved in the chemical analysis. Additional references to laboratory safety are available and have been identified[6,8] for the information of the analyst.

5. Apparatus and Materials

5.1 Sampling equipment, for discrete or composite sampling.

5.1.1 Grab sample bottle—1–L or 1–qt, amber glass, fitted with a screw cap lined with Teflon. Foil may be substituted for Teflon if the sample is not corrosive. If amber bottles are not available, protect samples from light. The bottle and cap liner must be washed, rinsed with acetone or methylene chloride, and dried before use to minimize contamination.

5.1.2 Automatic sampler (optional)—The sampler must incorporate glass sample containers for the collection of a minimum of 250 mL of sample. Sample containers must be kept refrigerated at 4 °C and protected from light during compositing. If the sampler uses a peristaltic pump, a minimum length of compressible silicone rubber tubing may be used. Before use, however, the compressible tubing should be thoroughly rinsed with methanol, followed by repeated rinsings with distilled water to minimize the potential for contamination of the sample. An integrating flow meter is required to collect flow proportional composites.

5.2 Glassware (All specifications are suggested. Catalog numbers are included for illustration only).

5.2.1 Separatory funnel—2–L, with Teflon stopcock.

5.2.2 Drying column—Chromatographic column, approximately 400 mm long × 19 mm ID, with coarse frit filter disc.

5.2.3 Chromatographic column—300 mm long × 10 mm ID, with Teflon stopcock and coarse frit filter disc at bottom (Kontes K–420540–0213 or equivalent).

5.2.4 Concentrator tube, Kuderna-Danish—10–mL, graduated (Kontes K–570050–1025 or equivalent). Calibration must be checked at the volumes employed in the test. Ground glass stopper is used to prevent evaporation of extracts.

5.2.5 Evaporative flask, Kuderna-Danish—500–mL (Kontes K–570001–0500 or equivalent). Attach to concentrator tube with springs.

5.2.6 Snyder column, Kuderna-Danish—Three-ball macro (Kontes K–503000–0121 or equivalent).

5.2.7 Snyder column, Kuderna-Danish—Two-ball micro (Kontes K–569001–0219 or equivalent).

5.2.8 Vials—10 to 15–mL, amber glass, with Teflon-lined screw cap.

5.3 Boiling chips—Approximately 10/40 mesh. Heat to 400 °C for 30 min or Soxhlet extract with methylene chloride.

5.4 Water bath—Heated, with concentric ring cover, capable of temperature control (±2 °C). The bath should be used in a hood.

5.5 Balance—Analytical, capable of accurately weighing 0.0001 g.

5.6 Gas chromatograph—An analytical system complete with gas chromatograph suitable for on-column injection and all required accessories including syringes, analytical columns, gases, detector, and strip-chart recorder. A data system is recommended for measuring peak areas.

5.6.1 Column 1—1.8 m long × 4 mm ID glass, packed with 1.5% SP–2250/1.95% SP–2401 Supelcoport (100/120 mesh) or equivalent. This column was used to develop the method performance statemelts in Section 14. Guidelines for the use of alternate column packings are provided in Section 12.1.

5.6.2 Column 2—1.8 m long × 4 mm ID glass, packed with 3% OV–1 on Supelcoport (100/120 mesh) or equivalent.

5.6.3 Detector—Electron capture detector. This detector has proven effective in the analysis of wastewaters for the parameters listed in the scope (Section 1.1), and was used to develop the method performance statements in Section 14. Guidelines for the use of alternate detectors are provided in Section 12.1.

6. Reagents

6.1 Reagent water—Reagent water is defined as a water in which an interferent is not observed at the MDL of the parameters of interest.

6.2 Acetone, hexane, isooctane, methylene chloride, methanol—Pesticide quality or equivalent.

6.3 Ethyl ether—nanograde, redistilled in glass if necessary.

6.3.1 Ethyl ether must be shown to be free of peroxides before it is used as indicated by

EM Laboratories Quant test strips. (Available from Scientific Products Co., Cat. No. P1126–8, and other suppliers.)

6.3.2 Procedures recommended for removal of peroxides are provided with the test strips. After cleanup, 20 mL of ethyl alcohol preservative must be added to each liter of ether.

6.4 Sodium sulfate—(ACS) Granular, anhydrous. Several levels of purification may be required in order to reduce background phthalate levels to an acceptable level: 1) Heat 4 h at 400 °C in a shallow tray, 2) Heat 16 h at 450 to 500 °C in a shallow tray, 3) Soxhlet extract with methylene chloride for 48 h.

6.5 Florisil—PR grade (60/100 mesh). Purchase activated at 1250 °F and store in the dark in glass containers with ground glass stoppers or foil-lined screw caps. To prepare for use, place 100 g of Florisil into a 500-mL beaker and heat for approximately 16 h at 40 °C. After heating transfer to a 500-mL reagent bottle. Tightly seal and cool to room temperature. When cool add 3 mL of reagent water. Mix thoroughly by shaking or rolling for 10 min and let it stand for at least 2 h. Keep the bottle sealed tightly.

6.6 Alumina—Neutral activity Super I, W200 series (ICN Life Sciences Group, No. 404583). To prepare for use, place 100 g of alumina into a 500-mL beaker and heat for approximately 16 h at 400 °C. After heating transfer to a 500-mL reagent bottle. Tightly seal and cool to room temperature. When cool add 3 mL of reagent water. Mix thoroughly by shaking or rolling for 10 min and let it stand for at least 2 h. Keep the bottle sealed tightly.

6.7 Stock standard solutions (1.00 μg/μL)—Stock standard solutions can be prepared from pure standard materials or purchased as certified solutions.

6.7.1 Prepare stock standard solutions by accurately weighing about 0.0100 g of pure material. Dissolve the material in isooctane and dilute to volume in a 10-mL volumetric flask. Larger volumes can be used at the convenience of the analyst. When compound purity is assayed to be 96% or greater, the weight can be used without correction to calculate the concentration of the stock standard. Commercially prepared stock standards can be used at any concentration if they are certified by the manufacturer or by an independent source.

6.7.2 Transfer the stock standard solutions into Teflon-sealed screw-cap bottles. Store at 4 °C and protect from light. Stock standard solutions should be checked frequently for signs of degradation or evaporation, especially just prior to preparing calibration standards from them.

6.7.3 Stock standard solutions must be replaced after six months, or sooner if comparison with check standards indicates a problem.

6.8 Quality control check sample concentrate—See Section 8.2.1.

7. Calibration

7.1 Establish gas chromatograph operating conditions equivalent to those given in Table 1. The gas chromatographic system can be calibrated using the external standard technique (Section 7.2) or the internal standard technique (Section 7.3).

7.2 External standard calibration procedure:

7.2.1 Prepared calibration standards at a minimum of three concentration levels for each parameter of interest by adding volumes of one or more stock standards to a volumetric flask and diluting to volume with isooctane. One of the external standards should be at a concentration near, but above, the MDL (Table 1) and the other concentrations should correspond to the expected range of concentrations found in real samples or should define the working range of the detector.

7.2.2 Using injections of 2 to 5 μL, analyze each calibration standard according to Section 12 and tabulate peak height or area responses against the mass injected. The results can be used to prepare a calibration curve for each compound. Alternatively, if the ratio of response to amount injected (calibration factor) is a constant over the working range (<10% relative standard deviation, RSD), linearity through the origin can be assumed and the average ratio or calibration factor can be used in place of a calibration curve.

7.3 Internal standard calibration procedure—To use this approach, the analyst must select one or more internal standards that are similar in analytical behavior to the compounds of interest. The analyst must further demonstrate that the measurement of the internal standard is not affected by method or matrix interferences. Because of these limitations, no internal standard can be suggested that is applicable to all samples.

7.3.1 Prepare calibration standards at a minimum of three concentration levels for each parameter of interest by adding volumes of one or more stock standards to a volumetric flash. To each calibration standard, add a known constant amount of one or more internal standards, and dilute to volume with isooctane. One of the standards should be at a concentration near, but above, the MDL and the other concentrations should correspond to the expected range of concentrations found in real samples or should define the working range of the detector.

7.3.2 Using injections of 2 to 5 µL, analyze each calibration standard according to Section 12 and tabulate peak height or area responses against concentration for each compound and internal standard. Calculate response factors (RF) for each compound using Equation 1.

$$RF = (A_s)(C_{is}\ (A_{is})(C_s)$$

Equation 1

where:

A_s=Response for the parameter to be measured.

A_{is}=Response for the internal standard.

C_{is}=Concentration of the internal standard (µg/L).

C_s=Concentration of the parameter to be measured (µg/L).

If the RF value over the working range is a constant (<10% RSD), the RF can be assumed to be invariant and the average RF can be used for calculations. Alternatively, the results can be used to plot a calibration curve of response ratios, A_s/A_{is}, vs. RF.

7.4 The working calibration curve, calibration factor, or RF must be verified on each working day by the measurement of one or more calibration standards. If the response for any parameter varies from the predicted response by more than ±15%, a new calibration curve must be prepared for that compound.

7.5 Before using any cleanup procedure, the analyst must process a series of calibration standards through the procedure to validate elution patterns and the absence of interferences from the reagents.

8. Quality Control

8.1 Each laboratory that uses this method is required to operate a formal quality control program. The minimum requirements of this program consist of an initial demonstration of laboratory capability and an ongoing analysis of spiked samples to evaluate and document data quality. The laboratory must maintain records to document the quality of data that is generated. Ongoing data quality checks are compared with established performance criteria to determine if the results of analyses meet the performance characteristics of the method. When results of sample spikes indicate atypical method performance, a quality control check standard must be analyzed to confirm that the measurements were performed in an in-control mode of operation.

8.1.1 The analyst must make an initial, one-time, demonstration of the ability to generate acceptable accuracy and precision with this method. This ability is established as described in Section 8.2.

8.1.2 In recognition of advances that are occurring in chromatography, the analyst is permitted certain options (detailed in Sections 10.4, 11.1, and 12.1) to improve the separations or lower the cost of measurements. Each time such a modification is made to the method, the analyst is required to repeat the procedure in Section 8.2.

8.1.3 Before processing any samples, the analyst must analyze a reagent water blank to demonstrate that interferences from the analytical system and glassware are under control. Each time a set of samples is extracted or reagents are changed, a reagent water blank must be processed as a safeguard against laboratory contamination.

8.1.4 The laboratory must, on an ongoing basis, spike and analyze a minimum of 10% of all samples to monitor and evaluate laboratory data quality. This procedure is described in Section 8.3.

8.1.5 The laboratory must, on an ongoing basis, demonstrate through the analyses of quality control check standards that the operation of the measurement system is in control. This procedure is described in Section 8.4. The frequency of the check standard analyses is equivalent to 10% of all samples analyzed but may be reduced if spike recoveries from samples (Section 8.3) meet all specified quality control criteria.

8.1.6 The laboratory must maintain performance records to document the quality of data that is generated. This procedure is described in Section 8.5.

8.2 To establish the ability to generate acceptable accuracy and precision, the analyst must perform the following operations.

8.2.1 A quality contrml (QC) check sample concentrate is required containing each parameter of interest at the following concentrations in acetone: butyl benzyl phthalate, 10 µg/mL; bis(2-ethylhexyl) phthalate, 50 µg/mL; di-n-octyl phthalate, 50 µg/mL; any other phthlate, 25 µg/mL. The QC check sample concentrate must be obtained from the U.S. Environmental Protection Agancy, Environmental Monitoring and Support Laboratory in Cincinnati, Ohio, if available. If not available from that source, the QC check sample concentrate must be obtained from another external source. If not available from either source above, the QC check sample concentrate must be prepared by the laboratory using stock standards prepared independently from those used for calibration.

8.2.2 Using a pipet, prepare QC check samples at the test concentrations shown in Table 2 by adding 1.00 mL of QC check sample concentrate to each of four 1–L aliquots of reagent water.

8.2.3 Analyze the well-mixed QC check samples according to the method beginning in Section 10.

8.2.4 Calculate the average recovery ($\bar{X}$) in µg/L, and the standard deviation of the recovery (s) in µg/L, for each parameter using the four results.

8.2.5 For each parameter compare s and $\bar{X}$ with the corresponding acceptance criteria for precision and accuracy, respectively, found in Table 2. If s and $\bar{X}$ for all parameters of interest meet the acceptance criteria, the system performance is acceptable and analysis of actual samples can begin. If any individual s exceeds the precision limit or any individual $\bar{X}$ falls outside the range for accuracy, the system performance is unacceptable for that parameter. Locate and correct the source of the problem and repeat the test for all parameters of interest beginning with Section 8.2.2.

8.3 The laboratory must, on an ongoing basis, spike at least 10% of the samples from each sample site being monitored to assess accuracy. For laboratories analyzing one to ten samples per month, at least one spiked sample per month is required.

8.3.1 The concentration of the spike in the sample should be determined as follows:

8.3.1.1 If, as in compliance monitoring, the concentration of a specific parameter in the sample is being checked against a regulatory concentration limit, the spike should be at that limit or 1 to 5 times higher than the background concentration determined in Section 8.3.2, whichever concentration would be larger.

8.3.1.2 If the concentration of a specific parameter in the sample is not being checked against a limit specific to that parameter, the spike should be at the test concentration in Section 8.2.2 or 1 to 5 times higher than the background concentration determined in Section 8.3.2, whichever concentration would be larger.

8.3.1.3 If it is impractical to determine background levels before spiking (e.g., maximum holding times will be exceeded), the spike concentration should be (1) the regulatory concentration limit, if any; or, if none (2) the larger of either 5 times higher than the expected background concentration or the test concentration in Section 8.2.2.

8.3.2 Analyze one sample aliquot to determine the background concentration (B) of each parameter. If necessary, prepare a new QC check sample concentrate (Section 8.2.1) appropriate for the background concentrations in the sample. Spike a second sample aliquot with 1.0 mL of the QC check sample concentrate and analyze it to determine the concentration after spiking (A) of each parameter. Calculate each percent recovery (P) as 100(A-B)%/T, where T is the known true value of the spike.

8.3.3 Compare the percent recovery (P) for each parameter with the corresponding QC acceptance criteria found in Table 2. These acceptance criteria were calculated to include an allowance for error in measurement of both the background and spike concentrations, assuming a spike to background ratio of 5:1. This error will be accounted for to the extent that the analyst's spike to background ratio approaches 5:1.[9] If spiking was performed at a concentration lower than the test concentration in Section 8.2.2, the analyst must use either the QC acceptance criteria in Table 2, or optional QC acceptance criteria calculated for the specific spike concentration. To calculate optional acceptance criteria for the recovery of a parameter: (1) Calculate accuracy (X′) using the equation in Table 3, substituting the spike concentration (T) for C; (2) calculate overall precision (S′) using the equation in Table 3, substituting X′ for $\bar{X}$; (3) calculate the range for recovery at the spike concentration as (100 X′/T)±2.44(100 S′/T)%.[9]

8.3.4 If any individual P falls outside the designated range for recovery, that parameter has failed the acceptance criteria. A check standard containing each parameter that failed the criteria must be analyzed as described in Section 8.4.

8.4 If any parameter fails the acceptance criteria for recovery in Section 8.3, a QC check standard containing each parameter that failed must be prepared and analyzed.

NOTE: The frequency for the required analysis of a QC check standard will depend upon the number of parameters being simultaneously tested, the complexity of the sample matrix, and the performance of the laboratory.

8.4.1 Prepare the QC check standard by adding 1.0 mL of QC check sample concentrate (Section 8.2.1 or 8.3.2) to 1 L of reagent water. The QC check standard needs only to contain the parameters that failed criteria in the test in Section 8.3.

8.4.2 Analyze the QC check standard to determine the concentration measured (A) of each parameter. Calculate each percent recovery (P_s) as 100 (A/T)%, where T is the true value of the standard concentration.

8.4.3 Compare the percent recovery (P_s) for each parameter with the corresponding QC acceptance criteria found in Table 2. Only parameters that failed the test in Section 8.3 need to be compared with these criteria. If the recovery of any such parameter falls outside the designated range, the laboratory performance for that parameter is judged to be out of control, and the problem must be immediately identified and corrected. The analytical result for that parameter in the unspiked sample is suspect and may not be reported for regulatory compliance purposes.

8.5 As part of the QC program for the laboratory, method accuracy for wastewater samples must be assessed and records must be maintained. After the analysis of five spiked wastewater samples as in Section 8.3, calculate the average percent recovery ($\bar{P}$) and the standard deviation of the percent recovery (s_p). Express the accuracy assessment as a percent recovery interval from $\bar{P}-2s_p$ to $\bar{P}+2s_p$. If $\bar{P}$=90% and s_p=10%, for example, the accuracy interval is expressed as 70–110%. Update the accuracy assessment for each parameter on a regular basis (e.g. after each five to ten new accuracy measurements).

8.6 It is recommended that the laboratory adopt additional quality assurance practices for use with this method. The specific practices that are most productive depend upon the needs of the laboratory and the nature of the samples. Field duplicates may be analyzed to assess the precision of the environmental measurements. When doubt exists over the identification of a peak on the chromatogram, confirmatory techniques such as gas chromatography with a dissimilar column, specific element detector, or mass spectrometer must be used. Whenever possible, the laboratory should analyze standard reference materials and participate in relevant performance evaluation studies.

9. Sample Collection, Preservation, and Handling

9.1 Grab samples must be collected in glass containers. Conventional sampling practices[10] should be followed, except that the bottle must not be prerinsed with sample before collection. Composite samples should be collected in refrigerated glass containers in accordance with the requirements of the program. Automatic sampling equipment must be as free as possible of Tygon tubing and other potential sources of contamination.

9.2 All samples must be iced or refrigerated at 4 °C from the time of collection until extraction.

9.3 All samples must be extracted within 7 days of collection and completely analyzed within 40 days of extraction.[2]

10. Sample Extraction

10.1 Mark the water meniscus on the side of the sample bottle for later determination of sample volume. Pour the entire sample into a 2–L separatory funnel.

10.2 Add 60 mL of methylene chloride to the sample bottle, seal, and shake 30 s to rinse the inner surface. Transfer the solvent to the separatory funnel and extract the sample by shaking the funnel for 2 min. with periodic venting to release excess pressure. Allow the organic layer to separate from the water phase for a minimum of 10 min. If the emulsion interface between layers is more than one-third the volume of the solvent layer, the analyst must employ mechanical techniques to complete the phrase separation. The optimum technique depends upon the sample, but may include stirring, filtration of the emulsion through glass wool, centrifugation, or other physical methods. Collect the methylene chloride extract in a 250-mL Erlenmeyer flask.

10.3 Add a second 60-mL volume of methylene chloride to the sample bottle and repeat the extraction procedure a second time, combining the extracts in the Erlenmeyer flask. Perform a third extraction in the same manner.

10.4 Assemble a Kuderna-Danish (K-D) concentrator by attaching a 10-mL concentrator tube to a 500-mL evaporative flask. Other concentrator devices or techniques may be used in place of the K-D concentrator if the requirements of Section 8.2 are met.

10.5 Pour the combined extract through a solvent-rinsed drying column containing about 10 cm of anhydrous sodium sulfate, and collect the extract in the K-D concentrator. Rinse the Erlenmeyer flask and column with 20 to 30 mL of methylene chloride to complete the quantitative transfer.

10.6 Add one or two clean boiling chips to the evaporative flask and attach a three-ball Snyder column. Prewet the Snyder column by adding about 1 mL of methylene chloride to the top. Place the K-D apparatus on a hot water bath (60 to 65 °C) so that the concentrator tube is partially immersed in the hot water, and the entire lower rounded surface of the flask is bathed with hot vapor. Adjust the vertical position of the apparatus and the water temperature as required to complete the concentration in 15 to 20 min. At the proper rate of distillation the balls of the column will actively chatter but the chambers will not flood with condensed solvent. When the apparent volume of liquid reaches 1 mL, remove the K-D apparatus and allow it to drain and cool for at least 10 min.

10.7 Increase the temperature of the hot water bath to about 80 °C. Momentarily remove the Snyder column, add 50 mL of hexane and a new boiling chip, and reattach the Snyder column. Concentrate the extract as in Section 10.6, except use hexane to prewet the column. The elapsed time of concentration should be 5 to 10 min.

10.8 Remove the Snyder column and rinse the flask and its lower joint into the concentrator tube with 1 to 2 mL of hexane. A 5-mL syringe is recommended for this operation. Adjust the extract volume to 10 mL. Stopper the concentrator tube and store refrigerated if further processing will not be performed immediately. If the extract will be stored longer than two days, it should be transferred to a Teflon-sealed screw-cap vial. If the sample extract requires no further cleanup, proceed with gas chromatographic analysis (Section 12). If the sample requires further cleanup, proceed to Section 11.

10.9 Determine the original sample volume by refilling the sample bottle to the mark and transferring the liquid to a 1000-mL graduated cylinder. Record the sample volume to the nearest 5 mL.

11. Cleanup and Separation

11. Cleanup procedures may not be necessary for a relatively clean sample matrix. If particular circumstances demand the use of a cleanup procedure, the analyst may use either procedure below or any other appropriate procedure. However, the analyst first must demonstrate that the requirements of

Section 8.2 can be met using the method as revised to incorporate the cleanup procedure.

11.2 If the entire extract is to be cleaned up by one of the following procedures, it must be concentrated to 2.0 mL. To the concentrator tube in Section 10.8, add a clean boiling chip and attach a two-ball micro-Snyder column. Prewet the column by adding about 0.5 mL of hexane to the top. Place the micro-K-D apparatus on a hot water bath (80 °C) so that the concentrator tube is partially immersed in the hot water. Adjust the vertical position of the apparatus and the water temperature as required to complete the concentration in 5 to 10 min. At the proper rate of distillation the balls of the column will actively chatter but the chambers will not flood. When the apparent volume of liquid reaches about 0.5 mL, remove the K-D apparatus and allow it to drain and cool for at least 10 min. Remove the micro-Snyder column and rinse its lower joint into the concentrator tube with 0.2 mL of hexane. Adjust the final volume to 2.0 mL and proceed with one of the following cleanup procedures.

11.3 Florisil column cleanup for phthalate esters:

11.3.1 Place 10 g of Florisil into a chromatographic column. Tap the column to settle the Florisil and add 1 cm of anhydrous sodium sulfate to the top.

11.3.2 Preelute the column with 40 mL of hexane. The rate for all elutions should be about 2 mL/min. Discard the eluate and just prior to exposure of the sodium sulfate layer to the air, quantitatively transfer the 2-mL sample extract onto the column using an additional 2 mL of hexane to complete the transfer. Just prior to exposure of the sodium sulfate layer to the air, add 40 mL of hexane and continue the elution of the column. Discard this hexane eluate.

11.3.3 Next, elute the column with 100 mL of 20% ethyl ether in hexane (V/V) into a 500-mL K-D flask equipped with a 10-mL concentrator tube. Concentrate the collected fraction as in Section 10.6. No solvent exchange is necessary. Adjust the volume of the cleaned up extract to 10 mL in the concentrator tube and analyze by gas chromatography (Section 12).

11.4 Alumina column cleanup for phthalate esters:

11.4.1 Place 10 g of alumina into a chromatographic column. Tap the column to settle the alumina and add 1 cm of anhydrous sodium sulfate to the top.

11.4.2 Preelute the column with 40 mL of hexane. The rate for all elutions should be about 2 mL/min. Discard the eluate and just prior to exposure of the sodium sulfate layer to the air, quantitatively transfer the 2-mL sample extract onto the column using an additional 2 mL of hexane to complete the transfer. Just prior to exposure of the sodium sulfate layer to the air, add 35 mL of hexane and continue the elution of the column. Discard this hexane eluate.

11.4.3 Next, elute the column with 140 mL of 20% ethyl ether in hexane (V/V) into a 500-mL K-D flask equipped with a 10–mL concentrator type. Concentrate the collected fraction as in Section 10.6. No solvent exchange is necessary. Adjust the volume of the cleaned up extract to 10 mL in the concentrator tube and analyze by gas chromatography (Section 12).

12. Gas Chromatography

12.1 Table 1 summarizes the recommended operating conditions for the gas chromatograph. Included in this table are retention times and MDL that can be achieved under these conditions. Examples of the separations achieved by Column 1 are shown in Figures 1 and 2. Other packed or capillary (open-tubular) columns, chromatographic conditions, or detectors may be used if the requirements of Section 8.2 are met.

12.2 Calibrate the system daily as described in Section 7.

12.3 If the internal standard calibration procedure is being used, the internal staldard must be added to the sample extract and mixed thoroughly immediately before injection into the gas chromatograph.

12.4 Inject 2 to 5 μL of the sample extract or standard into the gas-chromatograph using the solvent-flush technique.[11] Smaller (1.0 μL) volumes may be injected if automatic devices are employed. Record the volume injected to the nearest 0.05 μL, and the resulting peak size in area or peak height units.

12.5 Identify the parameters in the sample by comparing the retention times of the peaks in the sample chromatogram with those of the peaks in standard chromatograms. The width of the retention time window used to make identifications should be based upon measurements of actual retention time variations of standards over the course of a day. Three times the standard deviation of a retention time for a compound can be used to calculate a suggested window size; however, the experience of the analyst should weigh heavily in the interpretation of chromatograms.

12.6 If the response for a peak exceeds the working range of the system, dilute the extract and reanalyze.

12.7 If the measurement of the peak response is prevented by the presence of interferences, further cleanup is required.

13. Calculations

13.1 Determine the concentration of individual compounds in the sample.

13.1.1 If the external standard calibration procedure is used, calculate the amount of material injected from the peak response using the calibration curve or calibration factor determined in Section 7.2.2. The concentration in the sample can be calculated from Equation 2.

$$\text{Concentration } (\mu g/L) = \frac{(A)(V_t)}{(V_i)(Vs)}$$

Equation 2

where:
A=Amount of material injected (ng).
V_i=Volume of extract injected (μL).
V_t=Volume of total extract (μL).
V_s=Volume of water extracted (mL).

13.1.2 If the internal standard calibration procedure is used, calculate the concentration in the sample using the response factor (RF) determined in Section 7.3.2 and Equation 3.

$$\text{Concentration } (\mu g/L) = \frac{(A_s)(I_s)}{(A_{is})(RF)(V_o)}$$

Equation 3

where:
A_s=Response for the parameter to be measured.
A_{is}=Response for the internal standard.
I_s=Amount of internal standard added to each extract (μg).
V_o=Volume of water extracted (L).

13.2 Report results in μg/L without correction for recovery data. All QC data obtained should be reported with the sample results.

14. Method Performance

14.1 The method detection limit (MDL) is defined as the minimum concentration of a substance that can be measured and reported with 99% confidence that the value is above zero.[1] The MDL concentrations listed in Table 1 were obtained using reagent water.[12] Similar results were achieved using representative wastewaters. The MDL actually achieved in a given analysis will vary depending on instrument sensitivity and matrix effects.

14.2 This method has been tested for linearity of spike recovery from reagent water and has been demonstrated to be applicable over the concentration range from 5 × MDL to 1000 × MDL with the following exceptions: dimethyl and diethyl phthalate recoveries at 1000 × MDL were low (70%); bis-2-ethylhexyl and di-n-octyl phthalate recoveries at 5 × MDL were low (60%).[12]

14.3 This method was tested by 16 laboratories using reagent water, drinking water, surface water, and three industrial wastewaters spiked at six concentrations over the range 0.7 to 106 μg/L.[13] Single operator precision, overall precision, and method accuracy were found to be directly related to the concentration of the parameter and essentially independent of the sample matrix. Linear equations to describe these relationships are presented in Table 3.

References

1. 40 CFR part 136, appendix B.

2. ‘‘Determination of Phthalates in Industrial and Muncipal Wastewaters,’’ EPA 600/4–81–063, National Technical Information Service, PB81–232167, Springfield, Virginia 22161, July 1981.

3. ASTM Annual Book of Standards, Part 31, D3694–78. ‘‘Standard Practices for Preparation of Sample Containers and for Preservation of Organic Constituents,’’ American Society for Testing and Materials, Philadelphia.

4. Giam, C.S., Chan, H.S., and Nef, G.S. ‘‘Sensitive Method for Determination of Phthalate Ester Plasticizers in Open-Ocean Biota Samples,’’ *Analytical Chemistry*, *47*, 2225 (1975).

5. Giam, C.S., and Chan, H.S. ‘‘Control of Blanks in the Analysis of Phthalates in Air and Ocean Biota Samples,’’ U.S. National Bureau of Standards, Special Publication 442, pp. 701–708, 1976.

6. ‘‘Carcinogens—Working with Carcinogens,’’ Department of Health, Education, and Welfare, Public Health Service, Center for Disease Control, National Institute for Occupational Safety and Health, Publication No. 77–206, August 1977.

7. ‘‘OSHA Safety and Health Standards, General Industry,’’ (29 CFR part 1910), Occupational Safety and Health Administration, OSHA 2206 (Revised, January 1976).

8. ‘‘Safety in Academic Chemistry Laboratories,’’ American Chemical Society Publication, Committee on Chemical Safety, 3rd Edition, 1979.

9. Provost L.P., and Elder, R.S. ‘‘Interpretation of Percent Recovery Data,’’ *American Laboratory*, *15*, 58–63 (1983). (The value 2.44 used in the equation in Section 8.3.3 is two times the value 1.22 derived in this report.)

10. ASTM Annual Book of Standards, Part 31, D3370–76. ‘‘Standard Practices for Sampling Water,’’ American Society for Testing and Materials, Philadelphia.

11. Burke, J.A. ‘‘Gas Chromatography for Pesticide Residue Analysis; Some Practical Aspects,’’ *Journal of the Association of Official Analytical Chemists*, *48*, 1037 (1965).

12. ‘‘Method Detection Limit and Analytical Curve Studies, EPA Methods 606, 607, and 608,’’ Special letter report for EPA Contract 68–03–2606, U.S. Environmental Protection Agency, Environmental Monitoring and Support Laboratory, Cincinnati, Ohio 45268, June 1980.

13. ‘‘EPA Method Study 16 Method 606 (Phthalate Esters),’’ EPA 600/4–84–056, National Technical Information Service, PB84–211275, Springfield, Virginia 22161, June 1984.

TABLE 1—CHROMATOGRAPHIC CONDITIONS AND METHOD DETECTION LIMITS

Parameter	Retention time (min)		Method detection limit (μg/L)
	Column 1	Column 2	
Dimethyl phthalate	2.03	0.95	0.29
Diethyl phthalate	2.82	1.27	0.49
Di-n-butyl phthalate	8.65	3.50	0.36
Butyl benzyl phthalate	[a] 6.94	[a] 5.11	0.34
Bis(2-ethylhexyl) phthalate	[a] 8.92	[a] 10.5	2.0
Di-n-octyl phthalate	[a] 16.2	[a] 18.0	3.0

Column 1 conditions: Supelcoport (100/120 mesh) coated with 1.5% SP–2250/1.95% SP–2401 packed in a 1.8 m long × 4 mm ID glass column with 5% methane/95% argon carrier gas at 60 mL/min flow rate. Column temperature held isothermal at 180°C, except where otherwise indicated.

Column 2 conditions: Supelcoport (100/120 mesh) coated with 3% OV–1 packed in a 1.8 m long × 4 mm ID glass column with 5% methane/95% argon carrier gas at 60 mL/min flow rate. Column temperature held isothermal at 200 °C, except where otherwise indicated.

[a] 220 °C column temperature.

TABLE 2—QC ACCEPTANCE CRITERIA—METHOD 606

Parameter	Test conc. (μg/L)	Limit for s (μg/L)	Range for $\bar{X}$ (μg/L)	Range for P, P_s (percent)
Bis(2-ethylhexyl) phthalate	50	38.4	1.2–55.9	D–158
Butyl benzyl phthalate	10	4.2	5.7–11.0	30–136
Di-n-butyl phthalate	25	8.9	10.3–29.6	23–136
Diethyl phthalate	25	9.0	1.9–33.4	D–149
Dimethyl phathalate	25	9.5	1.3–35.5	D–156
Di-n-octyl phthalate	50	13.4	D–50.0	D–114

s=Standard deviation of four recovery measurements, in μg/L (Section 8.2.4).
$\bar{X}$=Average recovery for four recovery measurements, in μg/L (Section 8.2.4).
P, P_s=Percent recovery measured (Section 8.3.2, Section 8.4.2).
D=Detected; result must be greater than zero.

Note: These criteria are based directly upon the method performance data in Table 3. Where necessary, the limits for recovery have been broadened to assure applicability of the limits to concentrations below those used to develop Table 3.

TABLE 3—METHOD ACCURACY AND PRECISION AS FUNCTIONS OF CONCENTRATION—METHOD 606

Parameter	Accuracy, as recovery, X′ (μg/L)	Single analyst precision, s_r' (μg/L)	Overall precision, S′ (μg/L)
Bis(2-ethylhexyl) phthalate	0.53C+2.02	$0.80\bar{X}-2.54$	$0.73\bar{X}-0.17$
Butyl benzyl phthalate	0.82C+0.13	$0.26\bar{X}+0.04$	$0.25\bar{X}+0.07$
Di-n-butyl phthalate	0.79C+0.17	$0.23\bar{X}+0.20$	$0.29\bar{X}+0.06$
Diethyl phthalate	0.70C+0.13	$0.27\bar{X}+0.05$	$0.45\bar{X}+0.11$
Dimethyl phthalate	0.73C+0.17	$0.26\bar{X}+0.14$	$0.44\bar{X}+0.31$
Di-n-octyl phthalate	0.35C−0.71	$0.38\bar{X}+0.71$	$0.62\bar{X}+0.34$

$\bar{X}'$=Expected recovery for one or more measurements of a sample containing a concentration of C, in μg/L.
s_r'=Expected single analyst standard deviation of measurements at an average concentration found of $\bar{X}$, in μg/L.
S′=Expected interlaboratory standard deviation of measurements at an average concentration found of $\bar{X}$, in μg/L.
C=True value for the concentration, in μg/L.
$\bar{X}$=Average recovery found for measurements of samples containing a concentration of C, in μg/L.

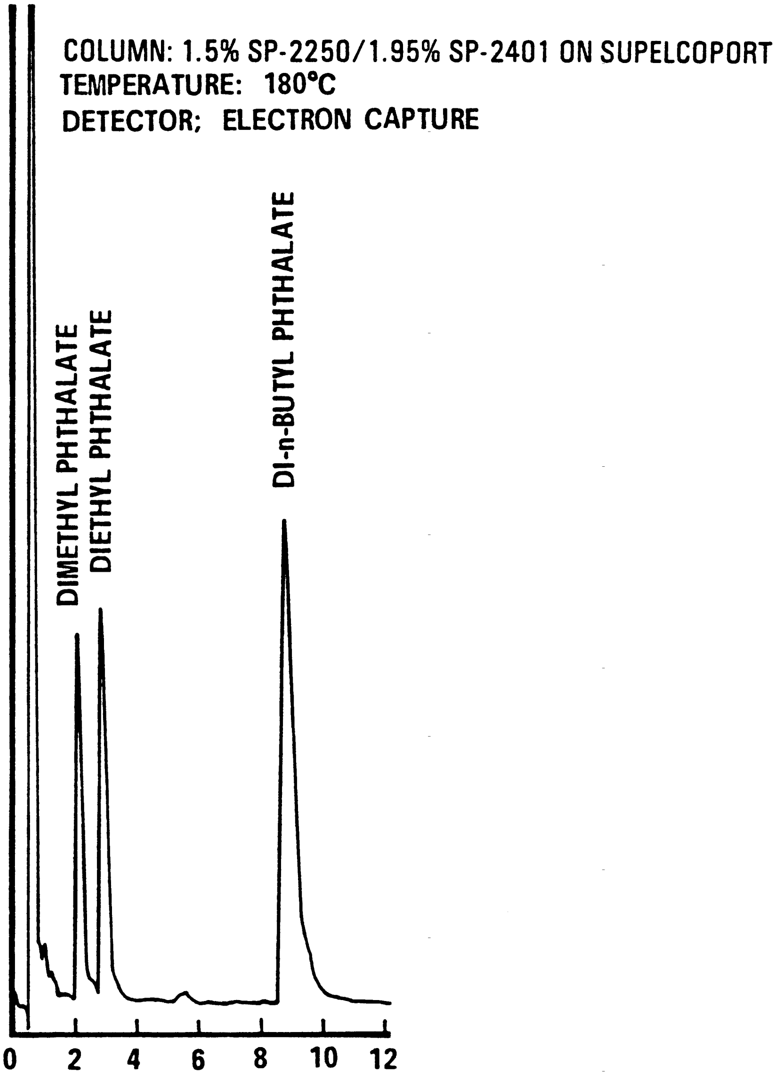

Figure 1. Gas chromatogram of phthalates.

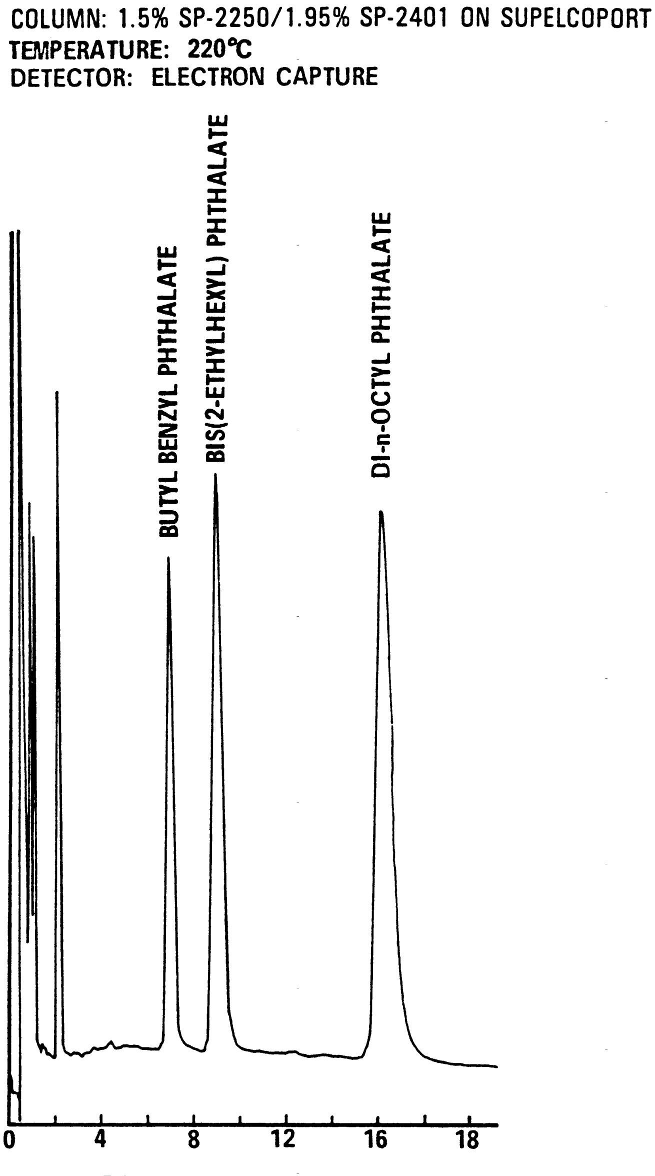

Figure 2. Gas chromatogram of phthalates.

METHOD 607—NITROSAMINES

1. Scope and Application

1.1 This method covers the determination of certain nitrosamines. The following parameters can be determined by this method:

Parameter	Storet No.	CAS No.
N-Nitrosodimethylamine	34438	62–75–9
N-Nitrosodiphenylamine	34433	86–30–6
N-Nitrosodi-n-propylamine	34428	621–64–7

1.2 This is a gas chromatographic (GC) method applicable to the determination of the parameters listed above in municipal and industrial discharges as provided under 40 CFR 136.1. When this method is used to analyze unfamiliar samples for any or all of the compmunds above, compound identifications should be supported by at least one additional qualitative technique. This method describes analytical conditimns for a second gas chromatographic column that can be used to confirm measurements made with the primary column. Method 625 provides gas chromatograph/mass spectrometer (GC/MS) conditions appropriate for the qualitative and quantitative confirmation of results for N-nitrosodi-n-propylamine. In order to confirm the presence of N-nitrosodiphenylamine, the cleanup procedure specified in Section 11.3 or 11.4 must be used. In order to confirm the presence of N-nitrosodimethylamine by GC/MS, Column 1 of this method must be substituted for the column recommended in Method 625. Confirmation of these parameters using GC-high resolution mass spectrometry or a Thermal Energy Analyzer is also recommended.[1,2]

1.3 The method detection limit (MDL, defined in Section 14.1)[3] for each parameter is listed in Table 1. The MDL for a specific wastewater may differ from those listed, depending upon the nature of interferences in the sample matrix.

1.4 Any modification of this method, beyond those expressly permitted, shall be considered as a major modification subject to application and approval of alternate test procedures under 40 CFR 136.4 and 136.5.

1.5 This method is restricted to use by or under the supervision of analysts experienced in the use of a gas chromatograph and in the interpretation of gas chromatograms. Each analyst must demonstrate the ability to generate acceptable results with this method using the procedure described in Section 8.2.

2. Summary of Method

2.1 A measured volume of sample, approximately 1–L, is extracted with methylene chloride using a separatory funnel. The methylene chloride extract is washed with dilute hydrochloric acid to remove free amines, dried, and concentrated to a volume of 10 mL or less. After the extract has been exchanged to methanol, it is separated by gas chromatography and the parameters are then measured with a nitrogen-phosphorus detector.[4]

2.2 The method provides Florisil and alumina column cleanup procedures to separate diphenylamine from the nitrosamines and to aid in the elimination of interferences that may be encountered.

3. Interferences

3.1 Method interferences may be caused by contaminants in solvents, reagents, glassware, and other sample processing hardware that lead to discrete artifacts and/or elevated baselines in gas chromatograms. All of these materials must be routinely demonstrated to be free from interferences under the conditions of the analysis by running laboratory reagent blanks as described in Section 8.1.3.

3.1.1 Glassware must be scrupulously cleaned.[5] Clean all glassware as soon as possible after use by rinsing with the last solvent used in it. Solvent rinsing should be followed by detergent washing with hot water, and rinses with tap water and distilled water. The glassware should then be drained dry, and heated in a muffle furnace at 400 °C for 15 to 30 min. Solvent rinses with acetone and pesticide quality hexane may be substituted for the muffle furnace heating. Volumetric ware should not be heated in a muffle furnace. After drying and cooling, glassware should be sealed and stored in a clean environment to prevent any accumulation of dust or other contaminants. Store inverted or capped with aluminum foil.

3.1.2 The use of high purity reagents and solvents helps to minimize interference problems. Purification of solvents by distillation in all-glass systems may be required.

3.2 Matrix interferences may be caused by contaminants that are co-extracted from the sample. The extent of matrix interferences will vary considerably from source to source, depending upon the nature and diversity of the industrial complex or municipality being sampled. The cleanup procedures in Section 11 can be used to overcome many of these interferences, but unique samples may require additional cleanup approaches to achieve the MDL listed in Table 1.

3.3 N-Nitrosodiphenylamine is reported[6-9] to undergo transnitrosation reactions. Care must be exercised in the heating or concentrating of solutions containing this compound in the presence of reactive amines.

3.4 The sensitive and selective Thermal Energy Analyzer and the reductive Hall detector may be used in place of the nitrogen-phosphorus detector when interferences are encountered. The Thermal Energy Analyzer offers the highest selectivity of the non-MS detectors.

4. Safety

4.1 The toxicity or carcinogenicity of each reagent used in this method has not been precisely defined; however, each chemical compound should be treated as a potential health hazard. From this viewpoint, exposure to these chemicals must be reduced to the lowest possible level by whatever means available. The laboratory is responsible for maintaining a current awareness file of OSHA regulations regarding the safe handling of the chemicals specified in this method. A reference file of material data handling sheets should also be made available to all personnel involved in the chemical analysis. Additional references to laboratory safety are available and have been identified[10-12] for the information of the analyst.

4.2 These nitrosamines are known carcinogens,[13-17] therefore, utmost care must be exercised in the handling of these materials. Nitrosamine reference standards and standard solutions should be handled and prepared in a ventilated glove box within a properly ventilated room.

5. Apparatus and Materials

5.1 Sampling equipment, for discrete or composite sampling.

5.1.1 Grab sample bottle—1–L or 1-qt, amber glass, fitted with a screw cap lined with Teflon. Foil may be substituted for Teflon if the sample is not corrosive. If amber bottles are not available, protect samples from light. The bottle and cap liner must be washed, rinsed with acetone or methylene chloride, and dried before use to minimize contamination.

5.1.2 Automatic sampler (optional)—The sampler must incorporate glass sample containers for the collection of a minimum of 250 mL of sample. Sample containers must be kept refrigerated at 4 °C and protected from light during compositing. If the sampler uses a peristaltic pump, a minimum length of compressible silicone rubber tubing may be used. Before use, however, the compressible tubing should be thoroughly rinsed with methanol, followed by repeated rinsings with distilled water to minimize the potential for contamination of the sample. An integrating flowmeter is required to collect flow proportional composites.

5.2 Glassware (All specifications are suggested. Catalog numbers are included for illustration only.):

5.2.1 Separatory funnels—2–L and 250–mL, with Teflon stopcock.

5.2.2 Drying column—Chromatographic column, approximately 400 mm long × 19 mm ID, with coarse frit filter disc.

5.2.3 Concentrator tube, Kuderna-Danish—10-mL, graduated (Kontes K–570050–1025 or equivalent). Calibration must be checked at the volumes employed in the test. Ground glass stopper is used to prevent evaporation of extracts.

5.2.4 Evaporative flask, Kuderna-Danish—500-mL (Kontes K–570001–0500 or equivalent). Attach to concentrator tube with springs.

5.2.5 Snyder column, Kuderna-Danish—Three-ball macro (Kontes K–503000–0121 or equivalent).

5.2.6 Snyder column, Kuderna-Danish—Two-ball micro (Kontes K–569001–0219 or equivalent).

5.2.7 Vials—10 to 15-mL, amber glass, with Teflon-lined screw cap.

5.2.8 Chromatographic column—Approximately 400 mm long × 22 mm ID, with Teflon stopcock and coarse frit filter disc at bottom (Kontes K–420540–0234 or equivalent), for use in Florisil column cleanup procedure.

5.2.9 Chromatographic column—Approximately 300 mm long × 10 mm ID, with Teflon stopcock and coarse frit filter disc at bottom (Kontes K–420540–0213 or equivalent), for use in alumina column cleanup procedure.

5.3 Boiling chips—Approximately 10/40 mesh. Heat to 400 °C for 30 min or Soxhlet extract with methylene chloride.

5.4 Water bath—Heated, with concentric ring cover, capable of temperature control (±2 °C). The bath should be used in a hood.

5.5 Balance—Analytical, capable of accurately weighing 0.0001 g.

5.6 Gas chromatograph—An analytical system complete with gas chromatograph suitable for on-column injection and all required accessories including syringes, analytical columns, gases, detector, and strip-chart recorder. A data system is recommended for measuring peak areas.

5.6.1 Column 1—1.8 m long × 4 mm ID glass, packed with 10% Carbowax 20 M/2% KOH on Chromosorb W-AW (80/100 mesh) or equivalent. This column was used to develop the method performance statements in Section 14. Guidelines for the use of alternate column packings are provided in Section 12.2.

5.6.2 Column 2—1.8 m long × 4 mm ID glass, packed with 10% SP–2250 on Supelcoport (100/120 mesh) or equivalent.

5.6.3 Detector—Nitrogen-phosphorus, reductive Hall, or Thermal Energy Analyzer detector.[1,2] These detectors have proven effective in the analysis of wastewaters for the parameters listed in the scope (Section 1.1). A nitrogen-phosphorus detector was used to develop the method performance statements in Section 14. Guidelines for the use of alternate detectors are provided in Section 12.2.

6. Reagents

6.1 Reagent water—Reagent water is defined as a water in which an interferent is not observed at the MDL of the parameters of interest.

6.2 Sodium hydroxide solution (10 N)—Dissolve 40 g of NaOH (ACS) in reagent water and dilute to 100 ml.

6.3 Sodium thiosulfate—(ACS) Granular.

6.4 Sulfuric acid (1+1)—Slowly, add 50 mL of H_2SO_4 (ACS, sp. gr. 1.84) to 50 mL of reagent water.

6.5 Sodium sulfate—(ACS) Granular, anhydrous. Purify by heating at 400 °C for 4 h in a shallow tray.

6.6 Hydrochloric acid (1+9)—Add one volume of concentrated HCl (ACS) to nine volumes of reagent water.

6.7 Acetone, methanol, methylene chloride, pentane—Pesticide quality or equivalent.

6.8 Ethyl ether—Nanograde, redistilled in glass if necessary.

6.8.1 Ethyl ether must be shown to be free of peroxides before it is used as indicated by EM Laboratories Quant test strips. (Available from Scientific Products Co., Cat No. P1126–8, and other suppliers.)

6.8.2 Procedures recommended for removal of peroxides are provided with the test strips. After cleanup, 20 mL of ethyl alcohol preservative must be added to each liter of ether.

6.9 Florisil—PR grade (60/100 mesh). Purchase activated at 1250 °F and store in the dark in glass containers with ground glass stoppers or foil-lined screw caps. Before use, activate each batch at least 16 h at 130 °C in a foil-covered glass container and allow to cool.

6.10 Alumina—Basic activity Super I, W200 series (ICN Life Sciences Group, No. 404571, or equivalent). To prepare for use, place 100 g of alumina into a 500-mL reagent bottle and add 2 mL of reagent water. Mix the alumina preparation thoroughly by shaking or rolling for 10 min and let it stand for at least 2 h. The preparation should be homogeneous before use. Keep the bottle sealed tightly to ensure proper activity.

6.11 Stock standard solutions (1.00 μg/μL)—Stock standard solutions can be prepared from pure standard materials or purchased as certified solutions.

6.11.1 Prepare stock standard solutions by accurately weighing about 0.0100 g of pure material. Dissolve the material in methanol and dilute to volume in a 10-mL volumetric flask. Larger volumes can be used at the convenience of the analyst. When compound purity is assayed to be 96% or greater, the weight can be used without correction to calculate the concentration of the stock standard. Commercially prepared stock standards can be used at any concentration if they are certified by the manufacturer or by an independent source.

6.11.2 Transfer the stock standard solutions into Teflon-sealed screw-cap bottles. Store at 4 °C and protect from light. Stock standard solutions should be checked frequently for signs of degradation or evaporation, especially just prior to preparing calibration standards from them.

6.11.3 Stock standard solutions must be replaced after six months, or sooner if comparison with check standards indicates a problem.

6.12 Quality control check sample concentrate—See Section 8.2.1.

7. Calibration

7.1 Establish gas chromatographic operating conditions equivalent to those given in Table 1. The gas chromatographic system can be calibrated using the external standard technique (Section 7.2) or the internal standard technique (Section 7.3).

7.2 External standard calibration procedure:

7.2.1 Prepare calibration standards at a minimum of three concentration levels for each parameter of interest by adding volumes of one or more stock standards to a volumetric flask and diluting to volume with methanol. One of the external standards should be at a concentration near, but above, the MDL (Table 1) and the other concentrations should correspond to the expected range of concentrations found in real samples or should define the working range of the detector.

7.2.2 Using injections of 2 to 5 μL, analyze each calibration standard according to Section 12 and tabulate peak height or area responses against the mass injected. The results can be used to prepare a calibration curve for each compound. Alternatively, if the ratio of response to amount injected (calibration factor) is a constant over the working range (<10% relative standard deviation, RSD), linearity through the origin can be assumed and the average ratio or calibration factor can be used in place of a calibration curve.

7.3 Internal standard calibration procedure—To use this approach, the analyst must select one or more internal standards that are similar in analytical behavior to the compounds of interest. The analyst must further demonstrate that the measurement of the internal standard is not affected by method or matrix interferences. Because of these limitations, no internal standard can be suggested that is applicable to all samples.

7.3.1 Prepare calibration standards at a minimum of three concentration levels for each parameter of interest by adding volumes of one or more stock standards to a volumetric flask. To each calibration standard, add a known constant amount of one or more internal standards, and dilute to volume with methanol. One of the standards should be at a concentration near, but above, the MDL and the other concentrations should correspond to the expected range of concentrations found in real samples or should define the working range of the detector.

7.3.2 Using injections of 2 to 5 µL, analyze each calibration standard according to Section 12 and tabulate peak height or area responses against concentration for each compound and internal standard. Calculate response factors (RF) for each compound using Equation 1.

$$RF = (A_s)(C_{is}\ (A_{is})(C_s)$$

Equation 1

where:

A_s=Response for the parameter to be measured.

A_{is}=Response for the internal standard.

C_{is}=Concentration of the internal standard (µg/L).

C_s=Concentration of the parameter to be measured (µg/L).

If the RF value over the working range is a constant (<10% RSD), the RF can be assumed to be invariant and the average RF can be used for calculations. Alternatively, the results can be used to plot a calibration curve of response ratios, A_s/A_{is}, vs. RF.

7.4 The working calibration curve, calibration factor, or RF must be verified on each working day by the measurement of one or more calibration standards. If the response for any parameter varies from the predicted response by more than ±15%, a new calibration curve must be prepared for that compound.

7.5 Before using any cleanup procedure, the analyst must process a series of calibration standards through the procedure to validate elution patterns and the absence of interferences from the reagents.

8. Quality Control

8.1 Each laboratory that uses this method is required to operate a formal quality control program. The minimum requirements of this program consist of an initial demonstration of laboratory capability and an ongoing analysis of spiked samples to evaluate and document data quality. The laboratory must maintain records to document the quality of data that is generated. Ongoing data quality checks are compared with established performance criteria to determine if the results of analyses meet the performance characteristics of the method. When results of sample spikes indicate atypical method performance, a quality control check standard must be analyzed to confirm that the measurements were performed in an in-control mode of operation.

8.1.1 The analyst must make an initial, one-time, demonstration of the ability to generate acceptable accuracy and precision with this method. This ability is established as described in Section 8.2.

8.1.2 In recognition of advances that are occurring in chromatography, the analyst is permitted certain options (detailed in Sections 10.4, 11.1, and 12.2) to improve the separations or lower the cost of measurements. Each time such a modification is made to the method, the analyst is required to repeat the procedure in Section 8.2.

8.1.3 Before processing any samples, the analyst must analyze a reagent water blank to demonstrate that interferences from the analytical system and glassware are under control. Each time a set of samples is extracted or reagents are changed, a reagent water blank must be processed as a safeguard against laboratory contamination.

8.1.4 The laboratory must, on an ongoing basis, spike and analyze a minimum of 10% of all samples to monitor and evaluate laboratory data quality. This procedure is described in Section 8.3.

8.1.5 The laboratory must, on an ongoing basis, demonstrate through the analyses of quality control check standards that the operation of the measurement system is in control. This procedure is described in Section 8.4. The frequency of the check standard analyses is equivalent to 10% of all samples analyzed but may be reduced if spike recoveries from samples (Section 8.3) meet all specified quality control criteria.

8.1.6 The laboratory must maintain performance records to document the quality of data that is generated. This procedure is described in Section 8.5.

8.2 To establish the ability to generate acceptable accuracy and precision, the analyst must perform the following operations.

8.2.1 A quality control (QC) check sample concentrate is required containing each parameter of interest at a concentration of 20 µg/mL in methanol. The QC check sample concentrate must be obtained from the U.S. Environmental Protection Agency, Environmental Monitoring and Support Laboratory in Cincinnati, Ohio, if available. If not available from that source, the QC check sample concentrate must be obtained from another external source. If not available from either source above, the QC check sample concentrate must be prepared by the laboratory using stock standards prepared independently from those used for calibration.

8.2.2 Using a pipet, prepare QC check samples at a concentration of 20 µg/L by adding 1.00 mL of QC check sample concentrate to each of four 1–L aliquots of reagent water.

8.2.3 Analyze the well-mixed QC check samples according to the method beginning in Section 10.

8.2.4 Calculate the average recovery ($\bar{X}$) in µg/L, and the standard deviation of the recovery (s) in µg/L, for each parameter using the four results.

8.2.5 For each parameter compare s and $\bar{X}$ with the corresponding acceptance criteria for precision and accuracy, respectively, found in Table 2. If s and $\bar{X}$ for all parameters of interest meet the acceptance criteria, the system performance is acceptable and analysis of actual samples can begin. If any individual s exceeds the precision limit or any individual $\bar{X}$ falls outside the range for accuracy, the system performance is unacceptable for that parameter. Locate and correct the source of the problem and repeat the test for all parameters of interest beginning with Section 8.2.2.

8.3 The laboratory must, on an ongoing basis, spike at least 10% of the samples from each sample site being monitored to assess accuracy. For laboratories analyzing one to ten samples per month, at least one spiked sample per month is required.

8.3.1 The concentration of the spike in the sample should be determined as follows:

8.3.1.1 If, as in compliance monitoring, the concentration of a specific parameter in the sample is being checked against a regulatory concentration limit, the spike should be at that limit or 1 to 5 times higher than the background concentration determined in Section 8.3.2, whichever concentration would be larger.

8.3.1.2 If the concentration of a specific parameter in the sample is not being checked against a limit specific to that parameter, the spike should be at 20 µg/L or 1 to 5 times higher than the background concentration determined in Section 8.3.2, whichever concentration would be larger.

8.3.1.3 If it is impractical to determine background levels before spiking (e.g., maximum holding times will be exceeded), the spike concentration should be (1) the regulatory concentration limit, if any; or, if none (2) the larger of either 5 times higher than the expected background concentration or 20 µg/L.

8.3.2 Analyze one sample aliquot to determine the background concentration (B) of each parameter. If necessary, prepare a new QC check sample concentrate (Section 8.2.1) appropriate for the background concentrations in the sample. Spike a second sample aliquot with 1.0 mL of the QC check sample concentrate and analyze it to determine the concentration after spiking (A) of each parameter. Calculate each percent recovery (P) as $100(A-B)\%/T$, where T is the known true value of the spike.

8.3.3 Compare the percent recovery (P) for each parameter with the corresponding QC acceptance criteria found in Table 2. These acceptance criteria were caluclated to include an allowance for error in measurement of both the background and spike concentrations, assuming a spike to background ratio of 5:1. This error will be accounted for to the extent that the analyst's spike to background ratio approaches 5:1.[18] If spiking was performed at a concentration lower than 20 µg/L, the analyst must use either the QC acceptance criteria in Table 2, or optional QC acceptance criteria caluclated for the specific spike concentration. To calculate optional acceptance crtieria for the recovery of a parameter: (1) Calculate accuracy (X′) using the equation in Table 3, substituting the spike concentration (T) for C; (2) calculate overall precision (S′) using the equation in Table 3, substituting X′ for $\bar{X}$; (3) calculate the range for recovery at the spike concentration as $(100\ X'/T) \pm 2.44(100\ S'/T)\%$.[18]

8.3.4 If any individual P falls outside the designated range for recovery, that parameter has failed the acceptance criteria. A check standard containing each parameter that failed the criteria must be analyzed as described in Section 8.4.

8.4 If any parameter fails the acceptance criteria for recovery in Section 8.3, a QC check standard containing each parameter that failed must be prepared and analyzed.

NOTE: The frequency for the required analysis of a QC check standard will depend upon the number of parameters being simultaneously tested, the complexity of the sample matrix, and the performance of the laboratory.

8.4.1 Prepare the QC check standard by adding 1.0 mL of QC check sample concentrate (Section 8.2.1 or 8.3.2) to 1 L of reagent water. The QC check standard needs only to contain the parameters that failed criteria in the test in Section 8.3.

8.4.2 Analyze the QC check standard to determine the concentration measured (A) of each parameter. Calculate each percent recovery (P_s) as 100 (A/T)%, where T is the true value of the standard concentration.

8.4.3 Compare the percent recovery (P_s) for each parameter with the corresponding QC acceptance criteria found in Table 2. Only parameters that failed the test in Section 8.3 need to be compared with these criteria. If the recovery of any such parameter falls outside the designated range, the laboratory performance for that parameter is judged to be out of control, and the problem must be immediately identified and corrected. The analytical result for that parameter in the unspiked sample is suspect and may not be reported for regulatory compliance purposes.

8.5 As part of the QC program for the laboratory, method accuracy for wastewater samples must be assessed and records must be maintained. After the analysis of five spiked wastewater samples as in Section 8.3, calculate the average percent recovery ($\bar{P}$) and the standard deviation of the percent recovery (s_p). Express the accuracy assessment as a percent recovery interval from $\bar{P}-2s_p$ to $\bar{P}+2s_p$. If $\bar{P}=90\%$ and $s_p=10\%$, for example, the accuracy interval is expressed as 70–110%. Update the accuracy assessment for each parameter on a regular basis (e.g. after each five to ten new accuracy measurements).

8.6 It is recommended that the laboratory adopt additional quality assurance practices for use with this method. The specific practices that are most productive depend upon the needs of the laboratory and the nature of the samples. Field duplicates may be analyzed to assess the precision of the environmental measurements. When doubt exists over the identification of a peak on the chromatogram, confirmatory techniques such as gas chromatography with a dissimilar column, specific element detector, or mass spectrometer must be used. Whenever possible, the laboratory should analyze standard reference materials and participate in relevant performance evaluation studies.

9. Sample Collection, Preservation, and Handling

9.1 Grab samples must be collected in glass containers. Conventional sampling practices[19] should be followed, except that the bottle must not be prerinsed with sample before collection. Composite samples should be collected in refrigerated glass containers in accordance with the requirements of the program. Automatic sampling equipment must be as free as possible of Tygon tubing and other potential sources of contamination.

9.2 All samples must be iced or refrigerated at 4 °C from the time of collection until extraction. Fill the sample bottles and, if residual chlorine is present, add 80 mg of sodium thiosulfate per liter of sample and mix well. EPA Methods 330.4 and 330.5 may be used for measurement of residual chlorine.[20] Field test kits are available for this purpose. If N-nitrosodiphenylamine is to be determined, adjust the sample pH to 7 to 10 with sodium hydroxide solution or sulfuric acid.

9.3 All samples must be extracted within 7 days of collection and completely analyzed within 40 days of extraction.[4]

9.4 Nitrosamines are known to be light sensitive.[7] Samples should be stored in amber or foil-wrapped bottles in order to minimize photolytic decomposition.

10. Sample Extraction

10.1 Mark the water meniscus on the side of the sample bottle for later determination of sample volume. Pour the entire sample into a 2–L separatory funnel. Check the pH of the sample with wide-range pH paper and adjust to within the range of 5 to 9 with sodium hydroxide solution or sulfuric acid.

10.2 Add 60 mL of methylene chloride to the sample bottle, seal, and shake 30 s to rinse the inner surface. Transfer the solvent to the separatory funnel and extract the sample by shaking the funnel for 2 min with periodic venting to release excess pressure. Allow the organic layer to separate from the water phase for a minimum of 10 min. If the emulsion interface between layers is more than one-third the volume of the solvent layer, the analyst must employ mechanical techniques to complete the phase separation. The optimum technique depends upon the sample, but may include stirring, filtration of the emulsion through glass wool, centrifugation, or other physical methods. Collect the methylene chloride extract in a 250-mL Erlenmeyer flask.

10.3 Add a second 60-mL volume of methylene chloride to the sample bottle and repeat the extraction procedure a second time, combining the extracts in the Erlenmeyer flask. Perform a third extraction in the same manner.

10.4 Assemble a Kuderna-Danish (K-D) concentrator by attaching a 10-mL concentrator tube to a 500-mL evaporative flask. Other concentration devices or techniques may be used in place of the K-D concentrator if the requirements of Section 8.2 are met.

10.5 Add 10 mL of hydrochloric acid to the combined extracts and shake for 2 min. Allow the layers to separate. Pour the combined extract through a solvent-rinsed drying column containing about 10 cm of anhydrous sodium sulfate, and collect the extract in the K-D concentrator. Rinse the Erlenmeyer flask and column with 20 to 30 mL of methylene chloride to complete the quantitative transfer.

10.6 Add one or two clean boiling chips to the evaporative flask and attach a three-ball Snyder column. Prewet the Snyder column by adding about 1 mL of methylene chloride to the top. Place the K-D apparatus on a hot water bath (60 to 65°C) so that the concentrator tube is partially immersed in the hot water, and the entire lower rounded surface of the flask is bathed with hot vapor. Adjust the vertical position of the apparatus and the water temperature as required to complete the concentration in 15 to 20 min. At the proper rate of distillation the balls of the column will actively chatter but the chambers will not flood with condensed solvent. When the apparent volume of liquid reaches 1 mL, remove the K-D apparatus and allow it to drain and cool for at least 10 min.

10.7 Remove the Snyder column and rinse the flask and its lower joint into the concentrator tube with 1 to 2 mL of methylene chloride. A 5-mL syringe is recommended for this operation. Stopper the concentrator tube and store refrigerated if further processing will not be performed immediately. If the extract will be stored longer than two days, it should be transferred to a Teflon-sealed screw-cap vial. If N-nitrosodiphenylamine is to be measured by gas chromatography, the analyst must first use a cleanup column to eliminate diphenylamine interference (Section 11). If N-nitrosodiphenylamine is of no interest, the analyst may proceed directly with gas chromatographic analysis (Section 12).

10.8 Determine the original sample volume by refilling the sample bottle to the mark and transferring the liquid to a 1000-mL graduated cylinder. Record the sample volume to the nearest 5 mL.

11. Cleanup and Separation

11.1 Cleanup procedures may not be necessary for a relatively clean sample matrix. If particular circumstances demand the use of a cleanup procedure, the analyst may use either procedure below or any other appropriate procedure. However, the analyst first must demonstrate that the requirements of Section 8.2 can be met using the method as revised to incorporate the cleanup procedure. Diphenylamine, if present in the original sample extract, must be separated from the nitrosamines if N-nitrosodiphenylamine is to be determined by this method.

11.2 If the entire extract is to be cleaned up by one of the following procedures, it must be concentrated to 2.0 mL. To the concentrator tube in Section 10.7, add a clean boiling chip and attach a two-ball micro-Snyder column. Prewet the column by adding about 0.5 mL of methylene chloride to the top. Place the micr-K-D apparatus on a hot water bath (60 to 65 °C) so that the concentrator tube is partially immersed in the hot water. Adjust the vertical position of the apparatus and the water temperature as required to complete the concentration in 5 to 10 min. At the proper rate of distillation the balls of the column will actively chatter but the chambers will not flood. When the apparent volume of liquid reaches about 0.5 mL, remove the K-D apparatus and allow it to drain and cool for at least 10 min. Remove the micro-Snyder column and rinse its lower joint into the concentrator tube with 0.2 mL of methylene chloride. Adjust the final volume to 2.0 mL and proceed with one of the following cleanup procedures.

11.3 Florisil column cleanup for nitrosamines:

11.3.1 Place 22 g of activated Florisil into a 22-mm ID chromatographic column. Tap the column to settle the Florisil and add about 5 mm of anhydrous sodium sulfate to the top.

11.3.2 Preelute the column with 40 mL of ethyl ether/pentane (15+85)(V/V). Discard the eluate and just prior to exposure of the sodium sulfate layer to the air, quantitatively transfer the 2-mL sample extract onto the column using an additional 2 mL of pentane to complete the transfer.

11.3.3 Elute the column with 90 mL of ethyl ether/pentane (15+85)(V/V) and discard the eluate. This fraction will contain the diphenylamine, if it is present in the extract.

11.3.4 Next, elute the column with 100 mL of acetone/ethyl ether (5+95)(V/V) into a 500-mL K-D flask equipped with a 10-mL concentrator tube. This fraction will contain all of the nitrosamines listed in the scope of the method.

11.3.5 Add 15 mL of methanol to the collected fraction and concentrate as in Section 10.6, except use pentane to prewet the column and set the water bath at 70 to 75 °C. When the apparatus is cool, remove the Snyder column and rinse the flask and its lower joint into the concentrator tube with 1 to 2 mL of pentane. Analyze by gas chromatography (Section 12).

11.4 Alumina column cleanup for nitrosamines:

11.4.1 Place 12 g of the alumina preparation (Section 6.10) into a 10-mm ID chromatographic column. Tap the column to settle the alumina and add 1 to 2 cm of anhydrous sodium sulfate to the top.

11.4.2 Preelute the column with 10 mL of ethyl ether/pentane (3+7)(V/V). Discard the eluate (about 2 mL) and just prior to exposure of the sodium sulfate layer to the air, quantitatively transfer the 2 mL sample extract onto the column using an additional 2 mL of pentane to complete the transfer.

11.4.3 Just prior to exposure of the sodium sulfate layer to the air, add 70 mL of ethyl ether/pentane (3+7)(V/V). Discard the first 10 mL of eluate. Collect the remainder of the eluate in a 500–mL K-D flask equipped with a 10 mL concentrator tube. This fraction contains N-nitrosodiphenylamine and probably a small amount of N-nitrosodi-n-propylamine.

11.4.4 Next, elute the column with 60 mL of ethyl ether/pentane (1+1)(V/V), collecting the eluate in a second K-D flask equipped with a 10–mL concentrator tube. Add 15 mL of methanol to the K-D flask. This fraction will contain N-nitrosodimethylamine, most of the N-nitrosodi-n-propylamine and any diphenylamine that is present.

11.4.5 Concentrate both fractions as in Section 10.6, except use pentane to prewet the column. When the apparatus is cool, remove the Snyder column and rinse the flask and its lower joint into the concentrator tube with 1 to 2 mL of pentane. Analyze the fractions by gas chromatography (Section 12).

12. Gas Chromatography

12.1 N-nitrosodiphenylamine completely reacts to form diphenylamine at the normal operating temperatures of a GC injection port (200 to 250 °C). Thus, N-nitrosodiphenylamine is chromatographed and detected as diphenylamine. Accurate determination depends on removal of diphenylamine that may be present in the original extract prior to GC analysis (See Section 11).

12.2 Table 1 summarizes the recommended operating conditions for the gas chromatograph. Included in this table are retention times and MDL that can be achieved under these conditions. Examples of the separations achieved by Column 1 are shown in Figures 1 and 2. Other packed or capillary (open-tubular) columns, chromatographic conditions, or detectors may be used if the requirements of Section 8.2 are met.

12.3 Calibrate the system daily as described in Section 7.

12.4 If the extract has not been subjected to one of the cleanup procedures in Section 11, it is necessary to exchange the solvent from methylene chloride to methanol before the thermionic detector can be used. To a 1 to 10-mL volume of methylene chloride extract in a concentrator tube, add 2 mL of methanol and a clean boiling chip. Attach a two-ball micro-Snyder column to the concentrator tube. Prewet the column by adding about 0.5 mL of methylene chloride to the top. Place the micro-K-D apparatus on a boiling (100 °C) water bath so that the concentrator tube is partially immersed in the hot water. Adjust the vertical position of the apparatus and the water temperature as required to complete the concentration in 5 to 10 min. At the proper rate of distillation the balls of the column will actively chatter but the chambers will not flood. When the apparent volume of liquid reaches about 0.5 mL, remove the K-D apparatus and allow it to drain and cool for at least 10 min. Remove the micro-Snyder column and rinse its lower joint into the concentrator tube with 0.2 mL of methanol. Adjust the final volume to 2.0 mL.

12.5 If the internal standard calibration procedure is being used, the internal standard must be added to the sample extract and mixed thoroughly immediately before injection into the gas chromatograph.

12.6 Inject 2 to 5 µL of the sample extract or standard into the gas chromatograph using the solvent-flush technique.[21] Smaller (1.0 µL) volumes may be injected if automatic devices are employed. Record the volume injected to the nearest 0.05 µL, and the resulting peak size in area or peak height units.

12.7 Identify the parameters in the sample by comparing the retention times of the peaks in the sample chromatogram with those of the peaks in standard chromatograms. The width of the retention time window used to make identifications should be based upon measurements of actual retention time variations of standards over the course of a day. Three times the standard deviation of a retention time for a compound can be used to calculate a suggested window size; however, the experience of the analyst should weigh heavily in the interpretation of chromatograms.

12.8 If the response for a peak exceeds the working range of the system, dilute the extract and reanalyze.

12.9 If the measurement of the peak response is prevented by the presence of interferences, further cleanup is required.

13. Calculations

13.1 Determine the concentration of individual compounds in the sample.

13.1.1 If the external standard calibration procedure is used, calculate the amount of material injected from the peak response using the calibration curve or calibration factor determined in Section 7.2.2. The concentration in the sample can be calculated from Equation 2.

$$\text{Concentration } (\mu g/L) = \frac{(A)(V_t)}{(V_i)(V_s)}$$

Equation 2

where:

A=Amount of material injected (ng).

V_i=Volume of extract injected (µL).

V_t=Volume of total extract (µL).

V_s=Volume of water extracted (mL).

13.1.2 If the internal standard calibration procedure is used, calculate the concentration in the sample using the response factor (RF) determined in Section 7.3.2 and Equation 3.

$$RF = \frac{(A_s)(C_{is})}{(A_{is})(C_s)}$$

Equation 3

where:

A_s=Response for the parameter to be measured.

A_{is}=Response for the internal standard.

I_s=Amount of internal standard added to each extract (µg).

V_o=Volume of water extracted (L).

13.2 Report results in µg/L without correction for recovery data. All QC data obtained should be reported with the sample results.

14. Method Performance

14.1 The method detection limit (MDL) is defined as the minimum concentration of a substance that can be measured and reported with 99% confidence that the value is above zero.[3] The MDL concentrations listed in Table 1 were obtained using reagent water.[22] Similar results were achieved using representative wastewaters. The MDL actually achieved in a given analysis will vary depending on instrument sensitivity and matrix effects.

14.2 This method has been tested for linearity of spike recovery from reagent water and has been demonstrated to be applicable over the concentration range from 4 × MDL to 1000 × MDL.[22]

14.3 This method was tested by 17 laboratories using reagent water, drinking water, surface water, and three industrial wastewaters spiked at six concentrations over the range 0.8 to 55 µg/L.[23] Single operator precision, overall precision, and method accuracy were found to be directly related to the concentration of the parameter and essentially independent of the sample matrix. Linear equations to describe these relationships are presented in Table 3.

References

1. Fine, D.H., Lieb, D., and Rufeh, R. ''Principle of Operation of the Thermal Energy Analyzer for the Trace Analysis of Volatile and Non-volatile N-nitroso Compounds,'' *Journal of Chromatography*, *107*, 351 (1975).

2. Fine, D.H., Hoffman, F., Rounbehler, D.P., and Belcher, N.M. ''Analysis of N-nitroso Compounds by Combined High Performance Liquid Chromatography and Thermal Energy Analysis,'' Walker, E.A., Bogovski, P. and Griciute, L., Editors, N-nitroso Compounds—Analysis and Formation, Lyon, International Agency for Research on Cancer (IARC Scientific Publications No. 14), pp. 43–50 (1976).

3. 40 CFR part 136, appendix B.

4. ''Determination of Nitrosamines in Industrial and Municipal Wastewaters,'' EPA 600/4–82–016, National Technical Information Service, PB82–199621, Springfield, Virginia 22161, April 1982.

5. ASTM Annual Book of Standards, Part 31, D3694–78. ''Standard Practices for Preparation of Sample Containers and for Preservation of Organic Constituents,'' American Society for Testing and Materials, Philadelphia.

6. Buglass, A.J., Challis, B.C., and Osborn, M.R. ''Transnitrosation and Decomposition of Nitrosamines,'' Bogovski, P. and Walker, E.A., Editors, N-nitroso Compounds in the Environment, Lyon, International Agency for Research on Cancer (IARC Scientific Publication No. 9), pp. 94–100 (1974).

7. Burgess, E.M., and Lavanish, J.M. ''Photochemical Decomposition of N-nitrosamines,'' *Tetrahedon Letters*, 1221 (1964)

8. Druckrey, H., Preussmann, R., Ivankovic, S., and Schmahl, D. ''Organotrope Carcinogene Wirkungen bei 65 Verschiedenen N-NitrosoVerbindungen an BD-Ratten,'' *Z. Krebsforsch.*, *69*, 103 (1967).

9. Fiddler, W. ''The Occurrence and Determination of N-nitroso Compounds,'' *Toxicol. Appl. Pharmacol.*, *31*, 352 (1975).

10. ''Carcinogens—Working With Carcinogens,'' Department of Health, Education, and Welfare, Public Health Service, Center for Disease Control, National Institute for Occupational Safety and Health, Publication No. 77–206, August 1977.

11. ''OSHA Safety and Health Standards, General Industry,'' (29 CFR Part 1910), Occupational Safety and Health Administration, OSHA 2206 (Revised, January 1976).

12. ''Safety in Academic Chemistry Laboratories,'' American Chemical Society Publication, Committee on Chemical Safety, 3rd Edition, 1979.

13. Lijinsky, W. ''How Nitrosamines Cause Cancer,'' *New Scientist*, *73*, 216 (1977).

14. Mirvish, S.S. ''N-Nitroso compounds: Their Chemical and in vivo Formation and Possible Importance as Environmental Carcinogens,'' *J. Toxicol. Environ. Health*, *3*, 1267 (1977).

15. ''Reconnaissance of Environmental Levels of Nitrosamines in the Central United States,'' EPA–330/1–77–001, National Enforcement Investigations Center, U.S. Environmental Protection Agency (1977).

16. ''Atmospheric Nitrosamine Assessment Report,'' Office of Air Quality Planning and Standards, U.S. Environmental Protection Agency, Research Triangle Park, North Carolina (1976).

17. ''Scientific and Technical Assessment Report on Nitrosamines,'' EPA–660/6–7–001, Office of Research and Development, U.S. Environmental Protection Agency (1976).

18. Provost, L.P., and Elder, R.S. ''Interpretation of Percent Recovery Data,'' *American Laboratory*, *15*, 58–63 (1983). (The value 2.44 used in the equation in Section 8.3.3 is two times the value of 1.22 derived in this report.)

19. ASTM Annual Book of Standards, Part 31, D3370–76. ''Standard Practices for Sampling Water,'' American Society for Testing and Materials, Philadelphia.

20. ''Methods 330.4 (Titrimetric, DPD-FAS) and 330.5 (Spectrophotometric, DPD) for Chlorine, Total Residual,'' Methods for Chemical Analysis of Water and Wastes, EPA–600/4–79–020, U.S. Environmental Protection Agency, Environmental Monitoring and Support Laboratory, Cincinnati, Ohio 45268, March 1979.

21. Burke, J. A. ''Gas Chromatography for Pesticide Residue Analysis; Some Practical Aspects,'' *Journal of the Association of Official Analytical Chemists*, *48*, 1037 (1965).

22. ''Method Detection Limit and Analytical Curve Studies EPA Methods 606, 607, and 608,'' Special letter report for EPA Contract 68–03–2606, U.S. Environmental Protection Agency, Environmental Monitoring and Support Laboratory, Cincinnati, Ohio 45268, June 1980.

23. ''EPA Method Study 17 Method 607—Nitrosamines,'' EPA 600/4–84–051, National Technical Information Service, PB84–207646, Springfield, Virginia 22161, June 1984.

TABLE 1—CHROMATOGRAPHIC CONDITIONS AND METHOD DETECTION LIMITS

Parameter	Retention time (min)		Method detection limit (µg/L)
	Column 1	Column 2	
N-Nitrosodimethylamine	4.1	0.88	0.15
N-Nitrosodi-n-propylamine	12.1	4.2	.46

TABLE 1—CHROMATOGRAPHIC CONDITIONS AND METHOD DETECTION LIMITS—Continued

Parameter	Retention time (min)		Method detection limit (µg/L)
	Column 1	Column 2	
N-Nitrosodiphenylamine [a]	[b] 12.8	[c] 6.4	.81

Column 1 conditions: Chromosorb W-AW (80/100 mesh) coated with 10% Carbowax 20 M/2% KOH packed in a 1.8 m long × 4mm ID glass column with helium carrier gas at 40 mL/min flow rate. Column temperature held isothermal at 110 °C, except where otherwise indicated.

Column 2 conditions: Supelcoport (100/120 mesh) coated with 10% SP–2250 packed in a 1.8 m long × 4 mm ID glass column with helium carrier gas at 40 mL/min flow rate. Column temperature held isothermal at 120 °C, except where otherwise indicated.

[a] Measured as diphenylamine.

[b] 220 °C column temperature.

[c] 210 °C column temperature.

TABLE 2—QC ACCEPTANCE CRITERIA—METHOD 607

Parameter	Test conc. (µg/L)	Limit for s (µg/L)	Range for $\bar{X}$ (µg/L)	Range for P, P_s (percent)
N-Nitrosodimethylamine	20	3.4	4.6–20.0	13–109
N-Nitrosodiphenyl	20	6.1	2.1–24.5	D–139
N-Nitrosodi-n-propylamine	20	5.7	11.5–26.8	45–146

s=Standard deviation for four recovery measurements, in µg/L (Section 8.2.4).

$\bar{X}$=Average recovery for four recovery measurements, in µg/L (Section 8.2.4).

P, P_s=Percent recovery measured (Section 8.3.2, Section 8.4.2).

D=Detected; result must be greater than zero.

NOTE: These criteria are based directly upon the method performance data in Table 3. Where necessary, the limits for recovery have been broadened to assure applicability of the limits to concentrations below those used to develop Table 3.

TABLE 3—METHOD ACCURACY AND PRECISION AS FUNCTIONS OF CONCENTRATION—METHOD 607

Parameter	Accuracy, as recovery, X′ (µg/L)	Single analyst precision, s_r' (µg/L)	Overall precision, S′ (µg/L)
N-Nitrosodimethylamine	0.37C+0.06	$0.25\bar{X}-0.04$	$0.25\bar{X}+0.11$
N-Nitrosodiphenylamine	0.64C+0.52	$0.36\bar{X}-1.53$	$0.46\bar{X}-0.47$
N-Nitrosodi-n-propylamine	0.96C − 0.07	$0.15\bar{X}+0.13$	$0.21\bar{X}+0.15$

X′=Expected recovery for one or more measurements of a sample containing a concentration of C, in µg/L.

s_r'=Expected single analyst standard deviation of measurements at an average concentration found of $\bar{X}$, in µg/L.

S′=Expected interlaboratory standard deviation of measurements at an average concentration found of $\bar{X}$, in µg/L.

C=True value for the concentration, in µg/L.

$\bar{X}$=Average recovery found for measurements of samples containing a concentration of C, in µg/L.

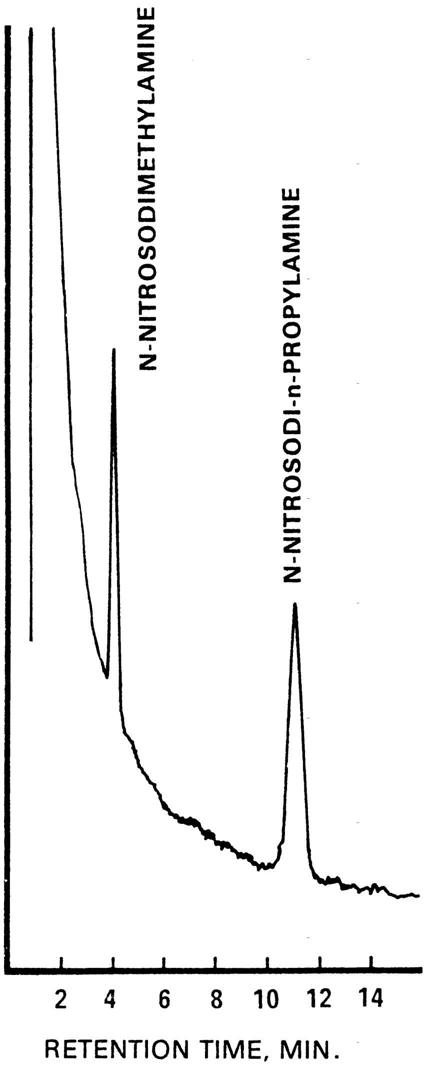

COLUMN: 10% CARBOWAX 20M / 2% KOH ON CHROMOSORB W-AW
TEMPERATURE: 110°C
DETECTOR: PHOSPHORUS/NITROGEN

Figure 1. Gas chromatogram of nitrosamines.

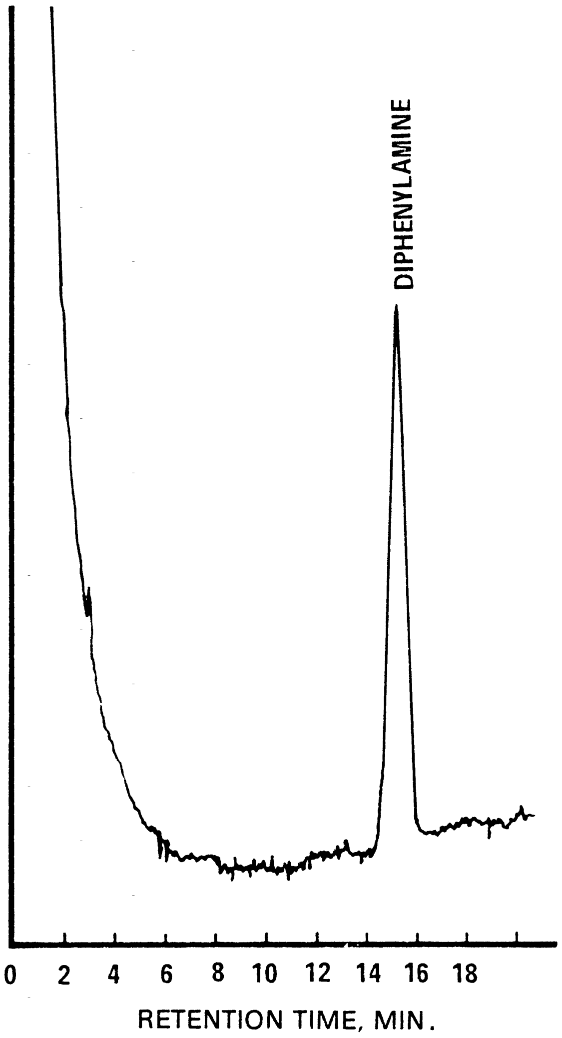
COLUMN: 10% CARBOWAX 20M/2% KOH ON CHROMOSORB W-AW
TEMPERATURE: 220°C
DETECTOR: PHOSPHORUS/NITROGEN

Figure 2. Gas chromatogram of N-nitrosodiphenylamine as diphenylamine.

Method 608—Organochlorine Pesticides and PCBs

1. Scope and Application

1.1 This method covers the determination of certain organochlorine pesticides and PCBs. The following parameters can be determined by this method:

Parameter	STORET No.	CAS No.
Aldrin	39330	309–00–2
α–BHC	39337	319–84–6
β–BHC	39338	319–85–7
δ–BHC	34259	319–86–8
γ–BHC	39340	58–89–9
Chlordane	39350	57–74–9
4,4′–DDD	39310	72–54–8
4,4′–DDE	39320	72–55–9
4,4′–DDT	39300	50–29–3
Dieldrin	39380	60–57–1
Endosulfan I	34361	959–98–8
Endosulfan II	34356	33212–65–9
Endosulfan sulfate	34351	1031–07–8
Eldrin	39390	72–20–8
Endrin aldehyde	34366	7421–93–4
Heptachlor	39410	76–44–8
Heptachlor epoxide	39420	1024–57–3
Toxaphene	39400	8001–35–2
PCB–1016	34671	12674–11–2
PCB–1221	39488	1104–28–2
PCB–1232	39492	11141–16–5
PCB–1242	39496	53469–21–9
PCB–1248	39500	12672–29–6
PCB–1254	39504	11097–69–1
PCB–1260	39508	11096–82–5

1.2 This is a gas chromatographic (GC) method applicable to the determination of the compounds listed above in municipal and industrial discharges as provided under 40 CFR 136.1. When this method is used to analyze unfamiliar samples for any or all of the compounds above, compound identifications should be supported by at least one additional qualitative technique. This method describes analytical conditions for a second gas chromatographic column that can be used to confirm measurements made with the primary column. Method 625 provides gas chromatograph/mass spectrometer (GC/MS) conditions appropriate for the qualitative and quantitative confirmation of results for all of the parameters listed above, using the extract produced by this method.

1.3 The method detection limit (MDL, defined in Section 14.1)[1] for each parameter is listed in Table 1. The MDL for a specific wastewater may differ from those listed, depending upon the nature of interferences in the sample matrix.

1.4 The sample extraction and concentration steps in this method are essentially the same as in Methods 606, 609, 611, and 612. Thus, a single sample may be extracted to measure the parameters included in the scope of each of these methods. When cleanup is required, the concentration levels must be high enough to permit selecting aliquots, as necessary, to apply appropriate cleanup procedures. The analyst is allowed the latitude, under Section 12, to select chromatographic conditions appropriate for the simultaneous measurement of combinations of these parameters.

1.5 Any modification of this method, beyond those expressly permitted, shall be considered as a major modification subject to application and approval of alternate test procedures under 40 CFR 136.4 and 136.5.

1.6 This method is restricted to use by or under the supervision of analysts experienced in the use of a gas chromatograph and in the interpretation of gas chromatograms. Each analyst must demonstrate the ability to generate acceptable results with this method using the procedure described in Section 8.2.

2. Summary of Method

2.1 A measured volume of sample, approximately 1–L, is extracted with methylene chloride using a separatory funnel. The methylene chloride extract is dried and exchanged to hexane during concentration to a volume of 10 mL or less. The extract is separated by gas chromatography and the parameters are then measured with an electron capture detector.[2]

2.2 The method provides a Florisil column cleanup procedure and an elemental sulfur removal procedure to aid in the elimination of interferences that may be encountered.

3. Interferences

3.1 Method interferences may be caused by contaminants in solvents, reagents, glassware, and other sample processing hardware that lead to discrete artifacts and/or elevated baselines in gas chromatograms. All of these materials must be routinely demonstrated to be free from interferences under the conditions of the analysis by running laboratory reagent blanks as described in Section 8.1.3.

3.1.1 Glassware must be scrupulously cleaned.[3] Clean all glassware as soon as possible after use by rinsing with the last solvent used in it. Solvent rinsing should be followed by detergent washing with hot water, and rinses with tap water and distilled water. The glassware should then be drained dry, and heated in a muffle furnace at 400 °C for 15 to 30 min. Some thermally stable materials, such as PCBs, may not be eliminated by this treatment. Solvent rinses with acetone and pesticide quality hexane may be substituted for the muffle furnace heating. Thorough rinsing with such solvents usually eliminates PCB interference. Volumetric ware should not be heated in a muffle furnace. After drying and cooling, glassware should be sealed and stored in a clean environment to prevent any accumulation of dust or other contaminants. Store inverted or capped with aluminum foil.

3.1.2 The use of high purity reagents and solvents helps to minimize interference problems. Purification of solvents by distillation in all-glass systems may be required.

3.2 Interferences by phthalate esters can pose a major problem in pesticide analysis when using the electron capture detector. These compounds generally appear in the chromatogram as large late eluting peaks, especially in the 15 and 50% fractions from Florisil. Common flexible plastics contain varying amounts of phthalates. These phthalates are easily extracted or leached from such materials during laboratory operations. Cross contamination of clean glassware routinely occurs when plastics are handled during extraction steps, especially when solvent-wetted surfaces are handled. Interferences from phthalates can best be minimized by avoiding the use of plastics in the laboratory. Exhaustive cleanup of reagents and glassware may be required to eliminate background phthalate contamination.[4,5] The interferences from phthalate esters can be avoided by using a microcoulometric or electrolytic conductivity detector.

3.3 Matrix interferences may be caused by contaminants that are co-extracted from the sample. The extent of matrix interferences will vary considerably from source to source, depending upon the nature and diversity of the industrial complex or municipality being sampled. The cleanup procedures in Section 11 can be used to overcome many of these interferences, but unique samples may require additional cleanup approaches to achieve the MDL listed in Table 1.

4. Safety

4.1 The toxicity or carcinogenicity of each reagent used in this method has not been precisely defined; however, each chemical compound should be treated as a potential health hazard. From this viewpoint, exposure to these chemicals must be reduced to the lowest possible level by whatever means available. The laboratory is responsible for maintaining a current awareness file of OSHA regulations regarding the safe handling of the chemicals specified in this method. A reference file of material data handling sheets should also be made available to all personnel involved in the chemical analysis. Additional references to laboratory safety are available and have been identified[6-8] for the information of the analyst.

4.2 The following parameters covered by this method have been tentatively classified as known or suspected, human or mammalian carcinogens: 4,4′-DDT, 4,4′–DDD, the BHCs, and the PCBs. Primary standards of these toxic compounds should be prepared in a hood. A NIOSH/MESA approved toxic gas respirator should be worn when the analyst handles high concentrations of these toxic compounds.

5. Apparatus and Materials

5.1 Sampling equipment, for discrete or composite sampling.

5.1.1 Grab sample bottle—1–L or 1-qt, amber glass, fitted with a screw cap lined with Teflon. Foil may be substituted for Teflon if the sample is not corrosive. If amber bottles are not available, protect samples from light. The bottle and cap liner must be washed, rinsed with acetone or methylene chloride, and dried before use to minimize contamination.

5.1.2 Automatic sampler (optional)—The sampler must incorporate glass sample containers for the collection of a minimum of 250 mL of sample. Sample containers must be kept refrigerated at 4 °C and protected from light during composting. If the sampler uses a peristaltic pump, a minimum length of compressible silicone rubber tubing may be used. Before use, however, the compressible tubing should be thoroughly rinsed with methanol, followed by repeated rinsings with distilled water to minimize the potential for contamination of the sample. An integrating flow meter is required to collect flow proportional composites.

5.2. Glassware (All specifications are suggested. Catalog numbers are included for illustration only.):

5.2.1 Separatory funnel—2–L, with Teflon stopcock.

5.2.2 Drying column—Chromatographic column, approximately 400 mm long × 19 mm ID, with coarse frit filter disc.

5.2.3 Chromatographic column—400 mm long × 22 mm ID, with Teflon stopcock and coarse frit filter disc (Kontes K–42054 or equivalent).

5.2.4 Concentrator tube, Kuderna-Danish—10–mL, graduated (Kontes K–570050–1025 or equivalent). Calibration must be checked at the volumes employed in the test. Ground glass stopper is used to prevent evaporation of extracts.

5.2.5 Evaporative flask, Kuderna-Danish—500–mL (Kontes K–570001–0500 or equivalent). Attach to concentrator tube with springs.

5.2.6 Snyder column, Kuderna/Danish—Three-ball macro (Kontes K–503000–0121 or equivalent).

5.2.7 Vials—10 to 15–mL, amber glass, with Teflon-lined screw cap.

5.3 Boiling chips—Approximately 10/40 mesh. Heat to 400 °C for 30 min or Soxhlet extract with methylene chloride.

5.4 Water bath—Heated, with concentric ring cover, capable of temperature control (±2 °C). The bath should be used in a hood.

5.5 Balance—Analytical, capable of accurately weighing 0.0001 g.

5.6 Gas chromatograph—An analytical system complete with gas chromatograph suitable for on-column injection and all required accessories including syringes, analytical columns, gases, detector, and strip-chart recorder. A data system is recommended for measuring peak areas.

5.6.1 Column 1—1.8 m long × 4 mm ID glass, packed with 1.5% SP–2250/1.95% SP–2401 on Supelcoport (100/120 mesh) or equivalent. This column was used to develop the method performance statements in Section 14. Guidelines for the use of alternate column packings are provided in Section 12.1.

5.6.2 Column 2—1.8 m long × 4 mm ID glass, packed with 3% OV–1 on Supelcoport (100/120 mesh) or equivalent.

5.6.3 Detector—Electron capture detector. This detector has proven effective in the analysis of wastewaters for the parameters listed in the scope (Section 1.1), and was used to develop the method performance statements in Section 14. Guidelines for the use of alternate detectors are provided in Section 12.1.

6. Reagents

6.1 Reagent water—Reagent water is defined as a water in which an interferent is not observed at the MDL of the parameters of interest.

6.2 Sodium hydroxide solution (10 N)—Dissolve 40 g of NaOH (ACS) in reagent water and dilute to 100 mL.

6.3 Sodium thiosulfate—(ACS) Granular.

6.4 Sulfuric acid (1+1)—Slowly, add 50 mL to H_2SO_4 (ACS, sp. gr. 1.84) to 50 mL of reagent water.

6.5 Acetone, hexane, isooctane, methylene chloride—Pesticide quality or equivalent.

6.6 Ethyl ether—Nanograde, redistilled in glass if necessary.

6.6.1 Ethyl ether must be shown to be free of peroxides before it is used as indicated by EM Laboratories Quant test strips. (Available from Scientific Products Co., Cat. No. P1126–8, and other suppliers.)

6.6.2 Procedures recommended for removal of peroxides are provided with the test strips. After cleanup, 20 mL of ethyl alcohol preservative must be added to each liter of ether.

6.7 Sodium sulfate—(ACS) Granular, anhydrous. Purify by heating at 400 °C for 4 h in a shallow tray.

6.8 Florisil—PR grade (60/100 mesh). Purchase activated at 1250 °F and store in the dark in glass containers with ground glass stoppers or foil-lined screw caps. Before use, activate each batch at least 16 h at 130 °C in a foil-covered glass container and allow to cool.

6.9 Mercury—Triple distilled.

6.10 Copper powder—Activated.

6.11 Stock standard solutions (1.00 µg/µL)—Stock standard solutions can be prepared from pure standard materials or purchased as certified solutions.

6.11.1 Prepare stock standard solutions by accurately weighing about 0.0100 g of pure material. Dissolve the material in isooctane and dilute to volume in a 10-mL volumetric flask. Larger volumes can be used at the convenience of the analyst. When compound purity is assayed to be 96% or greater, the weight can be used without correction to calculate the concentration of the stock standard. Commercially prepared stock standards can be used at any concentration if they are certified by the manufacturer or by an independent source.

6.11.2 Transfer the stock standard solutions into Teflon-sealed screw-cap bottles. Store at 4 °C and protect from light. Stock standard solutions should be checked frequently for signs of degradation or evaporation, especially just prior to preparing calibration standards from them.

6.11.3 Stock standard solutions must be replaced after six months, or sooner if comparison with check standards indicates a problem.

6.12 Quality control check sample concentrate—See Section 8.2.1.

7. Calibration

7.1 Establish gas chromatographic operating conditions equivalent to those given in Table 1. The gas chromatographic system can be calibrated using the external standard technique (Section 7.2) or the internal standard technique (Section 7.3).

7.2 External standard calibration procedure:

7.2.1 Prepare calibration standards at a minimum of three concentration levels for each parameter of interest by adding volumes of one or more stock standards to a volumetric flask and diluting to volume with isooctane. One of the external standards should be at a concentration near, but above, the MDL (Table 1) and the other concentrations should correspond to the expected range of concentrations found in real samples or should define the working range of the detector.

7.2.2 Using injections of 2 to 5 µL, analyze each calibration standard according to Section 12 and tabulate peak height or area responses against the mass injected. The results can be used to prepare a calibration curve for each compound. Alternatively, if the ratio of response to amount injected (calibration factor) is a constant over the working range (<10% relative standard deviation, RSD), linearity through the origin can be assumed and the average ratio or calibration factor can be used in place of a calibration curve.

7.3 Internal standard calibration procedure—To use this approach, the analyst must select one or more internal standards that are similar in analytical behavior to the compounds of interest. The analyst must further demonstrate that the measurement of the internal standard is not affected by method or matrix interferences. Because of these limitations, no internal standard can be suggested that is applicable to all samples.

7.3.1 Prepare calibration standards at a minimum of three concentration levels for each parameter of interest by adding volumes of one or more stock standards to a volumetric flask. To each calibration standard, add a known constant amount of one or more internal standards, and dilute to volume with isooctane. One of the standards should be at a concentration near, but above, the MDL and the other concentrations should correspond to the expected range of concentrations found in real samples or should define the working range of the detector.

7.3.2 Using injections of 2 to 5 µL, analyze each calibration standard according to Section 12 and tabulate peak height or area responses against concentration for each compound and internal standard. Calculate response factors (RF) for each compound using Equation 1.

$$RF = \frac{(A_s)(C_{is})}{(A_{is})(C_s)}$$

Equation 1

where:

A_s=Response for the parameter to be measured.

A_{is}=Response for the internal standard.

C_{is}=Concentration of the internal standard (µg/L).

C_s=Concentration of the parameter to be measured (µg/L).

If the RF value over the working range is a constant (<10% RSD), the RF can be assumed to be invariant and the average RF can be used for calculations. Alternatively, the results can be used to plot a calibration curve of response ratios, A_s/A_{is}, vs. RF.

7.4 The working calibration curve, calibration factor, or RF must be verified on each working day by the measurement of one or more calibration standards. If the response for any parameter varies from the predicted response by more than ±15%, the test must be repeated using a fresh calibration standard. Alternatively, a new calibration curve must be prepared for that compound.

7.5 The cleanup procedure in Section 11 utilizes Florisil column chromatography. Florisil from different batches or sources may vary in adsorptive capacity. To standardize the amount of Florisil which is used, the use of lauric acid value[9] is suggested. The referenced procedure determines the adsorption from hexane solution of lauric acid (mg) per g of Florisil. The amount of Florisil to be used for each column is calculated by dividing 110 by this ratio and multiplying by 20 g.

7.6 Before using any cleanup procedure, the analyst must process a series of calibration standards through the procedure to validate elution patterns and the absence of interferences from the reagents.

8. Quality Control

8.1 Each laboratory that uses this method is required to operate a formal quality control program. The minimum requirements of this program consist of an initial demonstration of laboratory capability and an ongoing analysis of spiked samples to evaluate and document data quality. The laboratory must maintain records to document the quality of data that is generated. Ongoing data quality checks are compared with established performance criteria to determine if the results of analyses meet the performance characteristics of the method. When results of sample spikes indicate atypical method performance, a quality control check standard must be analyzed to confirm that the measurements were performed in an in-control mode of operation.

8.1.1 The analyst must make an initial, one-time, demonstration of the ability to generate acceptable accuracy and precision with this method. This ability is established as described in Section 8.2.

8.1.2 In recognition of advances that are occurring in chromatography, the analyst is permitted certain options (detailed in Sections 10.4, 11.1, and 12.1) to improve the separations or lower the cost of measurements. Each time such a modification is made to the method, the analyst is required to repeat the procedure in Section 8.2.

8.1.3 Before processing any samples, the analyst must analyze a reagent water blank to demonstrate that interferences from the analytical system and glassware are under control. Each time a set of samples is extracted or reagents are changed, a reagent water blank must be processed as a safeguard against laboratory contamination.

8.1.4 The laboratory must, on an ongoing basis, spike and analyze a minimum of 10% of all samples to monitor and evaluate laboratory data quality. This procedure is described in Section 8.3.

8.1.5 The laboratory must, on an ongoing basis, demonstrate through the analyses of quality control check standards that the operation of the measurement system is in control. This procedure is described in Section 8.4. The frequency of the check standard analyses is equivalent to 10% of all samples analyzed but may be reduced if spike recoveries from samples (Section 8.3) meet all specified quality control criteria.

8.1.6 The laboratory must maintain performance records to document the quality of data that is generated. This procedure is described in Section 8.5.

8.2 To establish the ability to generate acceptable accuracy and precision, the analyst must perform the following operations.

8.2.1 A quality control (QC) check sample concentrate is required containing each single-component parameter of interest at the following concentrations in acetone: 4,4′–DDD, 10 µg/mL; 4,4′–DDT, 10 µg/mL; endosulfan II, 10 µg/mL; endosulfan sulfate, 10 µg/mL; endrin, 10 µg/mL; any other single-component pesticide, 2 µg/mL. If this method is only to be used to analyze for PCBs, chlordane, or toxaphene, the QC check sample concentrate should contain the most representative multicomponent parameter at a concentration of 50 µg/mL in acetone. The QC check sample concentrate must be obtained from the U.S. Environmental Protection Agency, Environmental Monitoring and Support Laboratory in Cincinnati, Ohio, if available. If not available from that source, the QC check sample concentrate must be obtained from another external source. If not available from either source above, the QC check sample concentrate must be prepared by the laboratory using stock standards prepared independently from those used for calibration.

8.2.2 Using a pipet, prepare QC check samples at the test concentrations shown in Table 3 by adding 1.00 mL of QC check sample concentrate to each of four 1–L aliquots of reagent water.

8.2.3 Analyze the well-mixed QC check samples according to the method beginning in Section 10.

8.2.4 Calculate the average recovery ($\bar{X}$) in µg/mL; and the standard deviation of the recovery (s) in µg/mL, for each parameter using the four results.

8.2.5 For each parameter compare s and $\bar{X}$ with the corresponding acceptance criteria for precision and accuracy, respectively, found in Table 3. If s and $\bar{X}$ for all parameters of interest meet the acceptance criteria, the system performance is acceptable and analysis of actual samples can begin. If any individual s exceeds the precision limit or any individual $\bar{X}$ falls outside the range for accuracy, the system performance is unacceptable for that parameter.

NOTE: The large number of parameters in Table 3 present a substantial probability that one or more will fail at least one of the acceptance criteria when all parameters are analyzed.

8.2.6 When one or more of the parameters tested fail at least one of the acceptance criteria, the analyst must proceed according to Section 8.2.6.1 or 8.2.6.2.

8.2.6.1 Locate and correct the source of the problem and repeat the test for all parameters of interest beginning with Section 8.2.2.

8.2.6.2 Beginning with Section 8.2.2, repeat the test only for those parameters that failed to meet criteria. Repeated failure, however, will confirm a general problem with the measurement system. If this occurs, locate and correct the source of the problem and repeat the test for all compmunds of interest beginning with Section 8.2.2.

8.3 The laboratory must, on an ongoing basis, spike at least 10% of the samples from each sample site being monitored to assess accuracy. For laboratories analyzing one to ten samples per month, at least one spiked sample per month is required.

8.3.1 The concentration of the spike in the sample should be determined as follows:

8.3.1.1 If, as in compliance monitoring, the concentration of a specific parameter in the sample is being checked against a regulatory concentration limit, the spike should be at that limit or 1 to 5 times higher than the background concentration determined in Section 8.3.2, whichever concentration would be larger.

8.3.1.2 If the concentration of a specific parameter in the sample is not being checked against a limit specific to that parameter, the spike should be at the test concentration in Section 8.2.2 or 1 to 5 times higher than the background concentration determined in Section 8.3.2, whichever concentration would be larger.

8.3.1.3 If it is impractical to determine background levels before spiking (e.g., maximum holding times will be exceeded), the spike concentration should be (1) the regulatory concentration limit, if any; or, if none (2) the larger of either 5 times higher than the expected background concentration or the test concentration in Section 8.2.2.

8.3.2 Analyze one sample aliquot to determine the background concentration (B) of each parameter. If necessary, prepare a new QC check sample concentrate (Section 8.2.1) appropriate for the background concentrations in the sample. Spike a second sample aliquot with 1.0 mL of the QC check sample concentrate and analyze it to determine the concentration after spiking (A) of each parameter. Calculate each percent recovery (P) as $100(A-B)\%/T$, where T is the known true value of the spike.

8.3.3 Compare the percent recovery (P) for each parameter with the corresponding QC acceptance criteria found in Table 3. These acceptance criteria were calculated to include an allowance for error in measurement of both the background and spike concentrations, assuming a spike to background ratio of 5:1. This error will be accounted for to the extent that the analyst's spike to background ratio approaches 5:1.[10] If spiking was performed at a concentration lower than the test concentration in Section 8.2.2, the analyst must use either the QC acceptance criteria in Table 3, or optional QC acceptance criteria calculated for the specific spike concentration. To calculate optional acceptance criteria for the recovery of a parameter: (1) Calculate accuracy (X′) using the equation in Table 4, substituting the spike concentration (T) for C; (2) calculate overall precision (S′) using the equation in Table 4, substituting X′

for $\bar{X}$; (3) calculate the range for recovery at the spike concentration as $(100\,X'/T)\pm2.44(100\,S'/T)\%$.[10]

8.3.4 If any individual P falls outside the designated range for recovery, that parameter has failed the acceptance criteria. A check standard containing each parameter that failed the criteria must be analyzed as described in Section 8.4.

8.4 If any parameter fails the acceptance criteria for recovery in Section 8.3, a QC check standard containing each parameter that failed must be prepared and analyzed.

NOTE: The frequency for the required analysis of a QC check standard will depend upon the number of parameters being simultaneously tested, the complexity of the sample matrix, and the performance of the laboratory. If the entire list of parameters in Table 3 must be measured in the sample in Section 8.3, the probability that the analysis of a QC check standard will be required is high. In this case the QC check standard should be routinely analyzed with the spike sample.

8.4.1 Prepare the QC check standard by adding 1.0 mL of QC check sample concentrate (Section 8.2.1 or 8.3.2) to 1 L of reagent water. The QC check standard needs only to contain the parameters that failed criteria in the test in Section 8.3.

8.4.2 Analyze the QC check standards to determine the concentration measured (A) of each parameter. Calculate each percent recovery (P_s) as 100 (A/T)%, where T is the true value of the standard concentration.

8.4.3 Compare the percent recovery (P_s) for each parameter with the corresponding QC acceptance criteria found in Table 3. Only parameters that failed the test in Section 8.3 need to be compared with these criteria. If the recovery of any such parameter falls outside the designated range, the laboratory performance for that parameter is judged to be out of control, and the problem must be immediately identified and corrected. The analytical result for that parameter in the unspiked sample is suspect and may not be reported for regulatory compliance purposes.

8.5 As part of the QC program for the laboratory, method accuracy for wastewater samples must be assessed and records must be maintained. After the analysis of five spiked wastewater samples as in Section 8.3, calculate the average percent recovery ($\bar{P}$) and the standard deviation of the percent recovery (s_p). Express the accuracy assessment as a percent recovery interval from $\bar{P}-2\ s_p$ to $\bar{P}+2\ s_p$. If $\bar{P}=90\%$ and $s_p=10\%$, for example, the accuracy interval is expressed as 70–110%. Update the accuracy assessment for each parameter on a regular basis (e.g. after each five to ten new accuracy measurements).

8.6 It is recommended that the laboratory adopt additional quality assurance practices for use with this method. The specific practices that are most productive depend upon the needs of the laboratory and the nature of the samples. Field duplicates may be analyzed to assess the precision of the environmental measurements. When doubt exists over the identification of a peak on the chromatogram, confirmatory techniques such as gas chromatography with a dissimilar column, specific element detector, or mass spectrometer must be used. Whenever possible, the laboratory should analyze standard reference materials and participate in relevant performance evaluation studies.

9. Sample Collection, Preservation, and Handling

9.1 Grab samples must be collected in glass containers. Conventional sampling practices[11] should be followed, except that the bottle must not be prerinsed with sample before collection. Composite samples should be collected in refrigerated glass containers in accordance with the requirements of the program. Automatic sampling equipment must be as free as possible of Tygon tubing and other potential sources of contamination.

9.2 All samples must be iced or refrigerated at 4 °C from the time of collection until extraction. If the samples will not be extracted within 72 h of collection, the sample should be adjusted to a pH range of 5.0 to 9.0 with sodium hydroxide solution or sulfuric acid. Record the volume of acid or base used. If aldrin is to be determined, add sodium thiosulfate when residual chlorine is present. EPA Methods 330.4 and 330.5 may be used for measurement of residual chlorine.[12] Field test kits are available for this purpose.

9.3 All samples must be extracted within 7 days of collection and completely analyzed within 40 days of extraction.[2]

10. Sample Extraction

10.1 Mark the water meniscus on the side of the sample bottle for later determination of sample volume. Pour the entire sample into a 2–L separatory funnel.

10.2 Add 60 mL of methylene chloride to the sample bottle, seal, and shake 30 s to rinse the inner surface. Transfer the solvent to the separatory funnel and extract the sample by shaking the funnel for 2 min. with periodic venting to release excess pressure. Allow the organic layer to separate from the water phase for a minimum of 10 min. If the emulsion interface between layers is more than one-third the volume of the solvent layer, the analyst must employ mechanical techniques to complete the phase separation. The optium technique depends upon the sample, but may include stirring, filtration of the emulsion through glass wool, centrifugation, or other physical methods. Collect the methylene chloride extract in a 250–mL Erlenmeyer flask.

10.3 Add a second 60-mL volume of methylene chloride to the sample bottle and repeat the extraction procedure a second time, combining the extracts in the Erlenmeyer flask. Perform a third extraction in the same manner.

10.4 Assemble a Kuderna-Danish (K-D) concentrator by attaching a 10-mL concentrator tube to a 500-mL evaporative flask. Other concentration devices or techniques may be used in place of the K-D concentrator if the requirements of Section 8.2 are met.

10.5 Pour the combined extract through a solvent-rinsed drying column containing about 10 cm of anhydrous sodium sulfate, and collect the extract in the K-D concentrator. Rinse the Erlenmeyer flask and column with 20 to 30 mL of methylene chloride to complete the quantitative transfer.

10.6 Add one or two clean boiling chips to the evaporative flask and attach a three-ball Snyder column. Prewet the Snyder column by adding about 1 mL of methylene chloride to the top. Place the K-D apparatus on a hot water bath (60 to 65 °C) so that the concentrator tube is partially immersed in the hot water, and the entire lower rounded surface of the flask is bathed with hot vapor. Adjust the vertical position of the apparatus and the water temperature as required to complete the concentration in 15 to 20 min. At the proper rate of distillation the balls of the column will actively chatter but the chambers will not flood with condensed solvent. When the apparent volume of liquid reaches 1 mL, remove the K-D apparatus and allow it to drain and cool for at least 10 min.

10.7 Increase the temperature of the hot water bath to about 80 °C. Momeltarily remove the Snyder column, add 50 mL of hexane and a new boiling chip, and reattach the Snyder column. Concentrate the extract as in Section 10.6, except use hexane to prewet the column. The elapsed time of concentration should be 5 to 10 min.

10.8 Remove the Snyder column and rinse the flask and its lower joint into the concentrator tube with 1 to 2 mL of hexane. A 5-mL syringe is recommended for this operation. Stopper the concentrator tube and store refrigerated if further processing will not be performed immediately. If the extract will be stored longer than two days, it should be transferred to a Teflon-sealed screw-cap vial. If the sample extract requires no further cleanup, proceed with gas chromatographic analysis (Section 12). If the sample requires further cleanup, proceed to Section 11.

10.9 Determine the original sample volume by refilling the sample bottle to the mark and transferring the liquid to a 1000-mL graduated cylinder. Record the sample volume to the nearest 5 mL.

11. Cleanup and Separation

11.1 Cleanup procedures may not be necessary for a relatively clean sample matrix. If particular circumstances demand the use of a cleanup procedure, the analyst may use either procedure below or any other appropriate procedure. However, the analyst first must demonstrate that the requirements of Section 8.2 can be met using the method as revised to incorporate the cleanup procedure. The Florisil column allows for a select fractionation of the compounds and will eliminate polar interferences. Elemental sulfur, which interferes with the electron capture gas chromatography of certain pesticides, can be removed by the technique described in Section 11.3.

11.2 Florisil column cleanup:

11.2.1 Place a weight of Florisil (nominally 20 g) predetermined by calibration (Section 7.5), into a chromatographic column. Tap the column to settle the Florisil and add 1 to 2 cm of anhydrous sodium sulfate to the top.

11.2.2 Add 60 mL of hexane to wet and rinse the sodium sulfate and Florisil. Just prior to exposure of the sodium sulfate layer to the air, stop the elution of the hexane by closing the stopcock on the chromatographic column. Discard the eluate.

11.2.3 Adjust the sample extract volume to 10 mL with hexane and transfer it from the K-D concentrator tube onto the column. Rinse the tube twice with 1 to 2 mL of hexane, adding each rinse to the column.

11.2.4 Place a 500-mL K-D flask and clean concentrator tube under the chromatographic column. Drain the column into the flask until the sodium sulfate layer is nearly exposed. Elute the column with 200 mL of 6% ethyl ether in hexane (V/V) (Fraction 1) at a rate of about 5 mL/min. Remove the K-D flask and set it aside for later concentration. Elute the column again, using 200 mL of 15% ethyl ether in hexane (V/V) (Fraction 2), into a second K-D flask. Perform the third elution using 200 mL of 50% ethyl ether in hexane (V/V) (Fraction 3). The elution patterns for the pesticides and PCBs are shown in Table 2.

11.2.5 Concentrate the fractions as in Section 10.6, except use hexane to prewet the column and set the water bath at about 85 °C. When the apparatus is cool, remove the Snyder column and rinse the flask and its lower joint into the concentrator tube with hexane. Adjust the volume of each fraction to 10 mL with hexane and analyze by gas chromatography (Section 12).

11.3 Elemental sulfur will usually elute entirely in Fraction 1 of the Florisil column cleanup. To remove sulfur interference from this fraction or the original extract, pipet 1.00 mL of the concentrated extract into a clean concentrator tube or Teflon-sealed vial. Add one to three drops of mercury and seal.[13] Agitate the contents of the vial for 15 to 30 s. Prolonged shaking (2 h) may be required. If so, this may be accomplished with a reciprocal shaker. Alternatively, activated copper powder may be used for sulfur removal.[14] Analyze by gas chromatography.

12. Gas Chromatography

12.1 Table 1 summarizes the recommended operating conditions for the gas chromatograph. Included in this table are retention times and MDL that can be achieved under these conditions. Examples of the separations achieved by Column 1 are shown in Figures 1 to 10. Other packed or capillary (open-tubular) columns, chromatographic conditions, or detectors may be used if the requirements of Section 8.2 are met.

12.2 Calibrate the system daily as described in Section 7.

12.3 If the internal standard calibration procedure is being used, the internal standard must be added to the sample extract and mixed thoroughly immediately before injection into the gas chromatograph.

12.4 Inject 2 to 5 µL of the sample extract or standard into the gas chromatograph using the solvent-flush technique.[15] Smaller (1.0 uL) volumes may be injected if automatic devices are employed. Record the volume injected to the nearest 0.05 µL, the total extract volume, and the resulting peak size in area or peak height units.

12.5 Identify the parameters in the sample by comparing the retention times of the peaks in the sample chromatogram with those of the peaks in standard chromatograms. The width of the retention time window used to make identifications should be based upon measurements of actual retention time variations of standards over the course of a day. Three times the standard deviation of a retention time for a compound can be used to calculate a suggested window size; however, the experience of the analyst should weigh heavily in the interpretation of chromatograms.

12.6 If the response for a peak exceeds the working range of the system, dilute the extract and reanalyze.

12.7 If the measurement of the peak response is prevented by the presence of interferences, further cleanup is required.

13. Calculations

13.1 Determine the concentration of individual compounds in the sample.

13.1.1 If the external standard calibration procedure is used, calculate the amount of material injected from the peak response using the calibration curve or calibration factor determined in Section 7.2.2. The concentration in the sample can be calculated from Equation 2.

$$\text{Concentration } (\mu\text{g/L}) = \frac{(\text{A})(\text{V}_\text{t})}{(\text{V}_\text{i})(\text{V}_\text{s})}$$

Equation 2

where:

A=Amount of material injected (ng).

V_i=Volume of extract injected (µL).

V_t=Volume of total extract (µL).

V_s=Volume of water extracted (mL).

13.1.2 If the internal standard calibration procedure is used, calculate the concentration in the sample using the response factor (RF) determined in Section 7.3.2 and Equation 3.

$$\text{Concentration } (\mu\text{g/L}) = \frac{(\text{A}_\text{s})(\text{I}_\text{s})}{(\text{A}_\text{is})(\text{RF})(\text{V}_\text{o})}$$

Equation 3

where:

A_s=Response for the parameter to be measured.

A_{is}=Response for the internal standard.

I_s=Amount of internal standard added to each extract (µg).

V_o=Volume of water extracted (L).

13.2 When it is apparent that two or more PCB (Aroclor) mixtures are present, the Webb and McCall procedure[16] may be used to identify and quantify the Aroclors.

13.3 For multicomponent mixtures (chlordane, toxaphene, and PCBs) match retention times of peaks in the standards with peaks in the sample. Quantitate every identifiable peak unless interference with individual peaks persist after cleanup. Add peak height or peak area of each identified peak in the chromatogram. Calculate as total response in the sample versus total response in the standard.

13.4 Report results in µg/L without correction for recovery data. All QC data obtained should be reported with the sample results.

14. Method Performance

14.1 The method detection limit (MDL) is defined as the minimum concentration of a substance that can be measured and reported with 99% confidence that the value is above zero.[1] The MDL concentrations listed in Table 1 were obtained using reagent water.[17] Similar results were achieved using representative wastewaters. The MDL actually achieved in a given analysis will vary depending on instrument sensitivity and matrix effects.

14.2 This method has been tested for linearity of spike recovery from reagent water and has been demonstrated to be applicable over the concentration range from 4×MDL to 1000×MDL with the following exceptions: Chlordane recovery at 4×MDL was low (60%); Toxaphene recovery was demonstrated linear over the range of 10×MDL to 1000×MDL.[17]

14.3 This method was tested by 20 laboratories using reagent water, drinking water, surface water, and three industrial wastewaters spiked at six concentrations.[18] Concentrations used in the study ranged from 0.5 to 30 µg/L for single-component pesticides and from 8.5 to 400 µg/L for multicomponent parameters. Single operator precision, overall precision, and method accuracy were found to be directly related to the concentration of the parameter and essentially independent of the sample matrix. Linear equations to describe these relationships are presented in Table 4.

REFERENCES

1. 40 CFR part 136, appendix B.

2. ‘‘Determination of Pesticides and PCBs in Industrial and Municipal Wastewaters,’’ EPA 600/4–82–023, National Technical Information Service, PB82–214222, Springfield, Virginia 22161, April 1982.

3. ASTM Annual Book of Standards, Part 31, D3694–78. ‘‘Standard Practices for Preparation of Sample Containers and for Preservation of Organic Constituents,’’ American Society for Testing and Materials, Philadelphia.

4. Giam, C.S., Chan, H.S., and Nef, G.S., ‘‘Sensitive Method for Determination of Phthalate Ester Plasticizers in Open-Ocean Biota Samples,’’ *Analytical Chemistry, 47,* 2225 (1975).

5. Giam, C.S., Chan, H.S. ‘‘Control of Blanks in the Analysis of Phthalates in Air and Ocean Biota Samples,’’ U.S. National Bureau of Standards, Special Publication 442, pp. 701–708, 1976.

6. ‘‘Carcinogens—Working With Carcinogens,’’ Department of Health, Education, and Welfare, Public Health Service, Center for Disease Control, National Institute for Occupational Safety and Health, Publication No. 77–206, August 1977.

7. ‘‘OSHA Safety and Health Standards, General Industry,’’ (29 CFR part 1910), Occupational Safety and Health Administration, OSHA 2206 (Revised, January 1976).

8. ‘‘Safety in Academic Chemistry Laboratories,’’ American Chemical Society Publication, Committee on Chemical Safety, 3rd Edition, 1979.

9. Mills, P.A. ‘‘Variation of Florisil Activity: Simple Method for Measuring Absorbent Capacity and Its Use in Standardizing Florisil Columns,’’ *Journal of the Association of Official Analytical Chemists, 51,* 29, (1968).

10. Provost, L.P., and Elder, R.S. ‘‘Interpretation of Percent Recovery Data,’’ *American Laboratory, 15,* 58–63 (1983). (The value 2.44 used in the equation in Section 8.3.3 is two times the value 1.22 derived in this report.)

11. ASTM Annual Book of Standards, Part 31, D3370–76. ‘‘Standard Practices for Sampling Water,’’ American Society for Testing and Materials, Philadelphia.

12. ‘‘Methods 330.4 (Titrimetric, DPD-FAS) and 330.5 (Spectrophotometric, DPD) for Chlorine, Total Residual,’’ Methods for Chemical Analysis of Water and Wastes, EPA–600/4–79–020, U.S. Environmental Protection Agency, Environmental Monitoring and Support Laboratory, Cincinnati, Ohio 45268, March 1979.

13. Goerlitz, D.F., and Law, L.M. *Bulletin for Environmental Contamination and Toxicology, 6,* 9 (1971).

14. ‘‘Manual of Analytical Methods for the Analysis of Pesticides in Human and Environmental Samples,’’ EPA–600/8–80–038, U.S. Environmental Protection Agency, Health Effects Research Laboratory, Research Triangle Park, North Carolina.

15. Burke, J.A. ‘‘Gas Chromatography for Pesticide Residue Analysis; Some Practical Aspects,’’ *Journal of the Association of Official Analytical Chemists, 48,* 1037 (1965).

16. Webb, R.G., and McCall, A.C. ‘‘Quantitative PCB Standards for Election Capture Gas Chromatography,’’ *Journal of Chromatographic Science, 11,* 366 (1973).

17. ‘‘Method Detection Limit and Analytical Curve Studies, EPA Methods 606, 607, and 608,’’ Special letter report for EPA Contract 68–03–2606, U.S. Environmental Protection Agency, Environmental Monitoring and Support Laboratory, Cincinnati, Ohio 45268, June 1980.

18. ‘‘EPA Method Study 18 Method 608—Organochlorine Pesticides and PCBs,’’ EPA 600/4–84–061, National Technical Information Service, PB84–211358, Springfield, Virginia 22161, June 1984.

TABLE 1—CHROMATOGRAPHIC CONDITIONS AND METHOD DETECTION LIMITS

Parameter	Retention time (min)		Method detection limit (µg/L)
	Col. 1	Col. 2	
α-BHC	1.35	1.82	0.003
γ-BHC	1.70	2.13	0.004
β-BHC	1.90	1.97	0.006
Heptachlor	2.00	3.35	0.003
δ-BHC	2.15	2.20	0.009
Aldrin	2.40	4.10	0.004
Heptachlor epoxide	3.50	5.00	0.083
Endosulfan I	4.50	6.20	0.014
4,4′-DDE	5.13	7.15	0.004
Dieldrin	5.45	7.23	0.002
Endrin	6.55	8.10	0.006

Table 1—Chromatographic Conditions and Method Detection Limits—Continued

Parameter	Retention time (min)		Method detection limit (µg/L)
	Col. 1	Col. 2	
4,4′-DDD	7.83	9.08	0.011
Endosulfan II	8.00	8.28	0.004
4,4′-DDT	9.40	11.75	0.012
Endrin aldehyde	11.82	9.30	0.023
Endosulfan sulfate	14.22	10.70	0.066
Chlordane	mr	mr	0.014
Toxaphene	mr	mr	0.24
PCB–1016	mr	mr	nd
PCB–1221	mr	mr	nd
PCB–1232	mt	mr	nd
PCB–1242	mr	mr	0.065
PCB–1248	mr	mr	nd
PCB–1254	mr	mr	nd
PCB–1260	mr	mr	nd

AColumn 1 conditions: Supelcoport (100/120 mesh) coated with 1.5% SP–2250/1.95% SP–2401 packed in a 1.8 m long × 4 mm ID glass column with 5% methane/95% argon carrier gas at 60 mL/min flow rate. Column temperature held isothermal at 200 °C, except for PCB–1016 through PCB–1248, should be measured at 160 °C.

AColumn 2 conditions: Supelcoport (100/120 mesh) coated with 3% OV–1 packed in a 1.8 m long × 4 mm ID glass column with 5% methane/95% argon carrier gas at 60 mL/min flow rate. Column temperature held isothermal at 200 °C for the pesticides; at 140 °C for PCB–1221 and 1232; and at 170 °C for PCB–1016 and 1242 to 1268.

Amr=Multiple peak response. See Figures 2 thru 10.

And=Not determined.

Table 2—Distribution of Chlorinated Pesticides and PCBs into Florisil Column Fractions 2

Parameter	Percent recovery by fraction[a]		
	1	2	3
Aldrin	100		
α-BHC	100		
β-BHC	97		
δ-BHC	98		
γ-BHC	100		
Chlordane	100		
4,4′–DDD	99		
4,4′–DDE	98		
4,4′–DDT	100		
Dieldrin	0	100	
Endosulfan I	37	64	
Endosulfan II	0	7	91
Endosulfan sulfate	0	0	106
Endrin	4	96	
Endrin aldehyde	0	68	26
Heptachlor	100		
Heptachlor epoxide	100		
Toxaphene	96		
PCB–1016	97		
PCB–1221	97		
PCB–1232	95	4	
PCB–1242	97		
PCB–1248	103		
PCB–1254	90		
PCB–1260	95		

[a] Eluant composition:
Fraction 1–6% ethyl ether in hexane.
Fraction 2–15% ethyl ether in hexane.
Fraction 3–50% ethyl ether in hexane.

Table 3—QC Acceptance Criteria—Method 608

Parameter	Test conc. (µg/L)	Limit for s (µg/L)	Range for $\bar{X}$ (µg/L)	Range for P, P_s(%)
Aldrin	2.0	0.42	1.08–2.24	42–122
α-BHC	2.0	0.48	0.98–2.44	37–134
β-BHC	2.0	0.64	0.78–2.60	17–147
δ-BHC	2.0	0.72	1.01–2.37	19–140
γ-BHC	2.0	0.46	0.86–2.32	32–127

TABLE 3—QC ACCEPTANCE CRITERIA—METHOD 608—Continued

Parameter	Test conc. (µg/L)	Limit for s (µg/L)	Range for $\bar{X}$ (µg/L)	Range for P, P_s(%)
Chlordane	50	10.0	27.6–54.3	45–119
4,4′–DDD	10	2.8	4.8–12.6	31–141
4,4′–DDE	2.0	0.55	1.08–2.60	30–145
4,4′–DDT	10	3.6	4.6–13.7	25–160
Dieldrin	2.0	0.76	1.15–2.49	36–146
Endosulfan I	2.0	0.49	1.14–2.82	45–153
Endosulfan II	10	6.1	2.2–17.1	D–202
Endosulfan Sulfate	10	2.7	3.8–13.2	26–144
Endrin	10	3.7	5.1–12.6	30–147
Heptachlor	2.0	0.40	0.86–2.00	34–111
Heptachlor epoxide	2.0	0.41	1.13–2.63	37–142
Toxaphene	50.0	12.7	27.8–55.6	41–126
PCB-1016	50	10.0	30.5–51.5	50–114
PCB-1221	50	24.4	22.1–75.2	15–178
PCB-1232	50	17.9	14.0–98.5	10–215
PCB-1242	50	12.2	24.8–69.6	39–150
PCB-1248	50	15.9	29.0–70.2	38–158
PCB-1254	50	13.8	22.2–57.9	29–131
PCB-1260	50	10.4	18.7–54.9	8–127

s=Standard deviation of four recovery measurements, in µg/L (Section 8.2.4).
$\bar{X}$=Average recovery for four recovery measurements, in µg/L (Section 8.2.4).
P, P_s=Percent recovery measured (Section 8.3.2, Section 8.4.2).
D=Detected; result must be greater than zero.

NOTE: These criteria are based directly upon the method performance data in Table 4. Where necessary, the limits for recovery have been broadened to assure applicability of the limits to concentrations below those used to develop Table 4.

TABLE 4—METHOD ACCURACY AND PRECISION AS FUNCTIONS OF CONCENTRATION—METHOD 608

Parameter	Accuracy, as recovery, X′ (µg/L)	Single analyst precision, s_r' (µg/L)	Overall precision, S′ (µg/L)
Aldrin	0.81C+0.04	$0.16\bar{X}-0.04$	$0.20\bar{X}-0.01$
α-BHC	0.84C+0.03	$0.13\bar{X}+0.04$	$0.23\bar{X}-0.00$
β-BHC	0.81C+0.07	$0.22\bar{X}-0.02$	$0.33X-0.05$
δ-BHC	0.81C+0.07	$0.18\bar{X}+0.09$	$0.25\bar{X}+0.03$
γ-BHC	0.82C − 0.05	$0.12\bar{X}+0.06$	$0.22\bar{X}+0.04$
Chlordane	0.82C − 0.04	$0.13\bar{X}+0.13$	$0.18\bar{X}+0.18$
4,4′-DDD	0.84C+0.30	$0.20\bar{X}-0.18$	$0.27\bar{X}-0.14$
4,4′-DDE	0.85C+0.14	$0.13\bar{X}+0.06$	$0.28\bar{X}-0.09$
4,4′-DDT	0.93C − 0.13	$0.17\bar{X}+0.39$	$0.31\bar{X}-0.21$
Dieldrin	0.90C+0.02	$0.12\bar{X}+0.19$	$0.16\bar{X}+0.16$
Endosulfan I	0.97C+0.04	$0.10\bar{X}+0.07$	$0.18\bar{X}+0.08$
Endosulfan II	0.93C+0.34	$0.41\bar{X}—0.65$	$0.47\bar{X}-0.20$
Endosulfan Sulfate	0.89C − 0.37	$0.13\bar{X}+0.33$	$0.24\bar{X}+0.35$
Endrin	0.89C − 0.04	$0.20\bar{X}+0.25$	$0.24\bar{X}+0.25$
Heptachlor	0.69C+0.04	$0.06\bar{X}+0.13$	$0.16\bar{X}+0.08$
Heptachlor epoxide	0.89C+0.10	$0.18\bar{X}-0.11$	$0.25\bar{X}-0.08$
Toxaphene	0.80C+1.74	$0.09\bar{X}+3.20$	$0.20\bar{X}+0.22$
PCB–1016	0.81C+0.50	$0.13\bar{X}+0.15$	$0.15\bar{X}+0.45$
PCB–1221	0.96C+0.65	$0.29\bar{X}-0.76$	$0.35\bar{X}-0.62$
PCB–1232	0.91C+10.79	$0.21\bar{X}-1.93$	$0.31\bar{X}+3.50$
PCB–1242	0.93C+0.70	$0.11\bar{X}+1.40$	$0.21\bar{X}+1.52$
PCB–1248	0.97C+1.06	$0.17\bar{X}+0.41$	$0.25\bar{X}-0.37$
PCB–1254	0.76C+2.07	$0.15\bar{X}+1.66$	$0.17\bar{X}+3.62$
PCB–1260	0.66C+3.76	$0.22\bar{X}-2.37$	$0.39\bar{X}-4.86$

X′=Expected recovery for one or more measurements of a sample containing a concentration of C, in µg/L.
s_r'=Expected single analyst standard deviation of measurements at an average concentration found of $\bar{X}$, in µg/L.
S′=Expected interlaboratory standard deviation of measurements at an average concentration found of $\bar{X}$, in µg/L.
C=True value for the concentration, in µg/L.
$\bar{X}$=Average recovery found for measurements of samples containing a concentration of C, in µg/L.

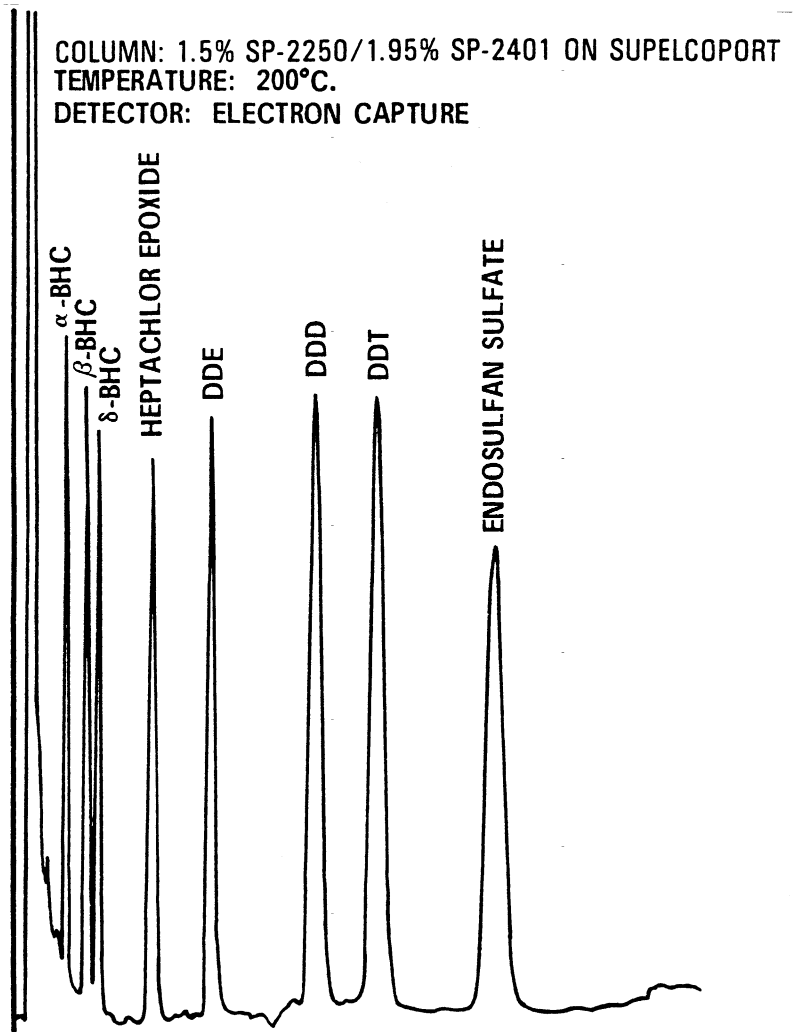

Figure 1. Gas chromatogram of pesticides.

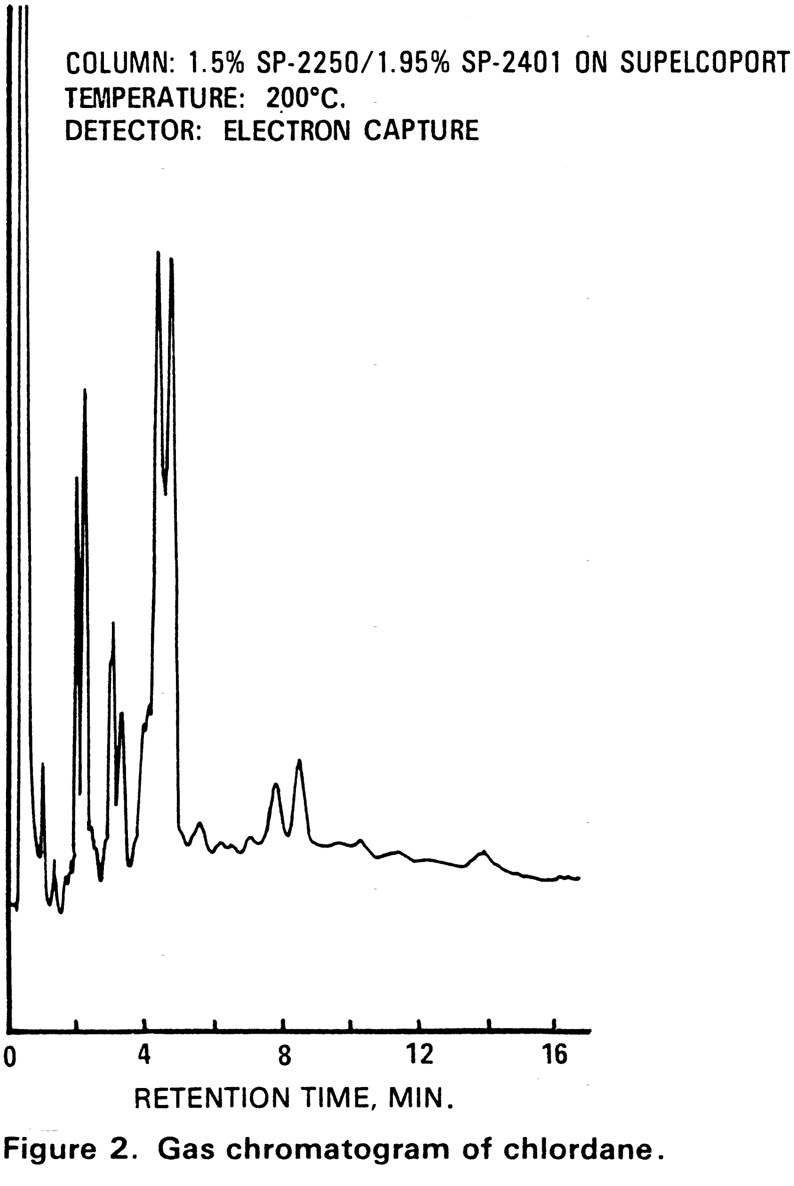

Figure 2. Gas chromatogram of chlordane.

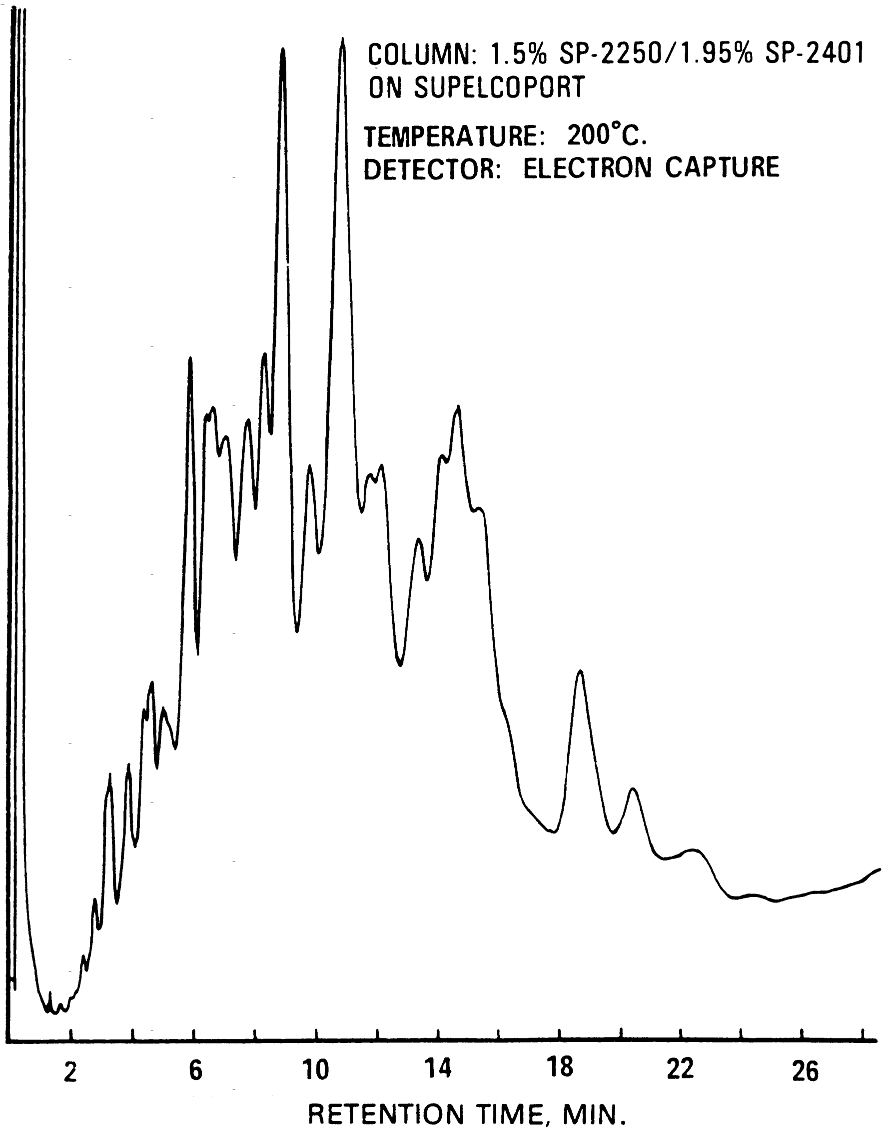

Figure 3. Gas chromatogram of toxaphene.

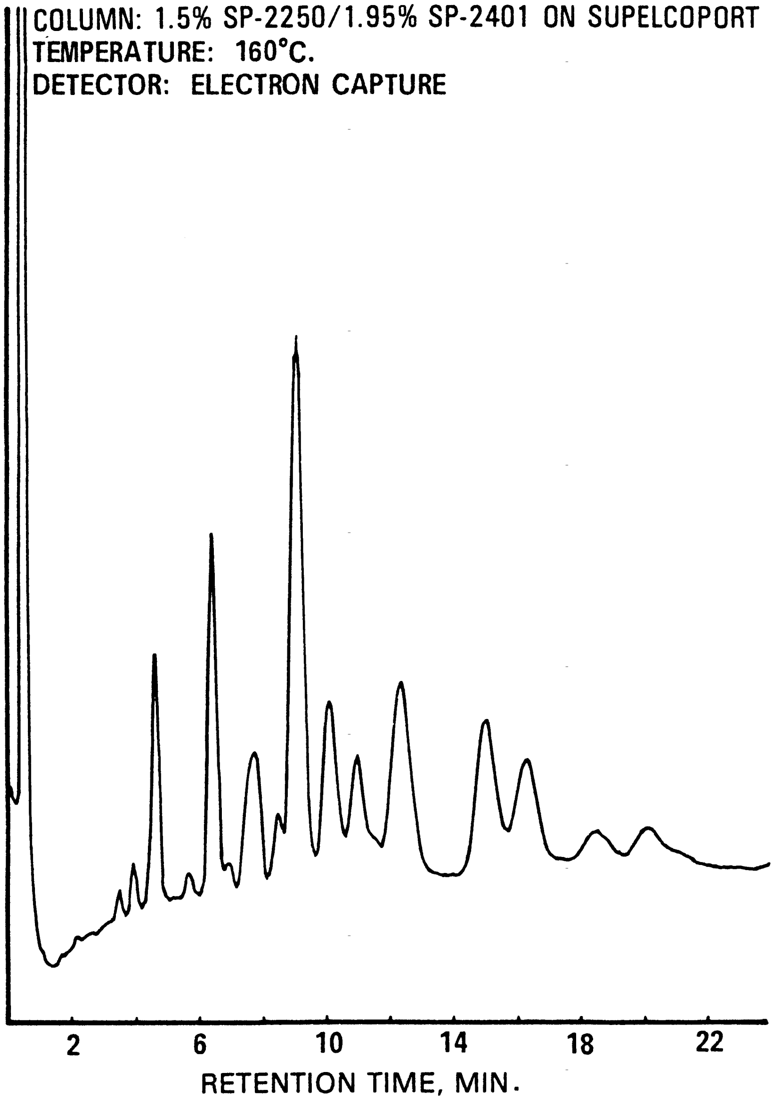

Figure 4. Gas chromatogram of PCB-1016.

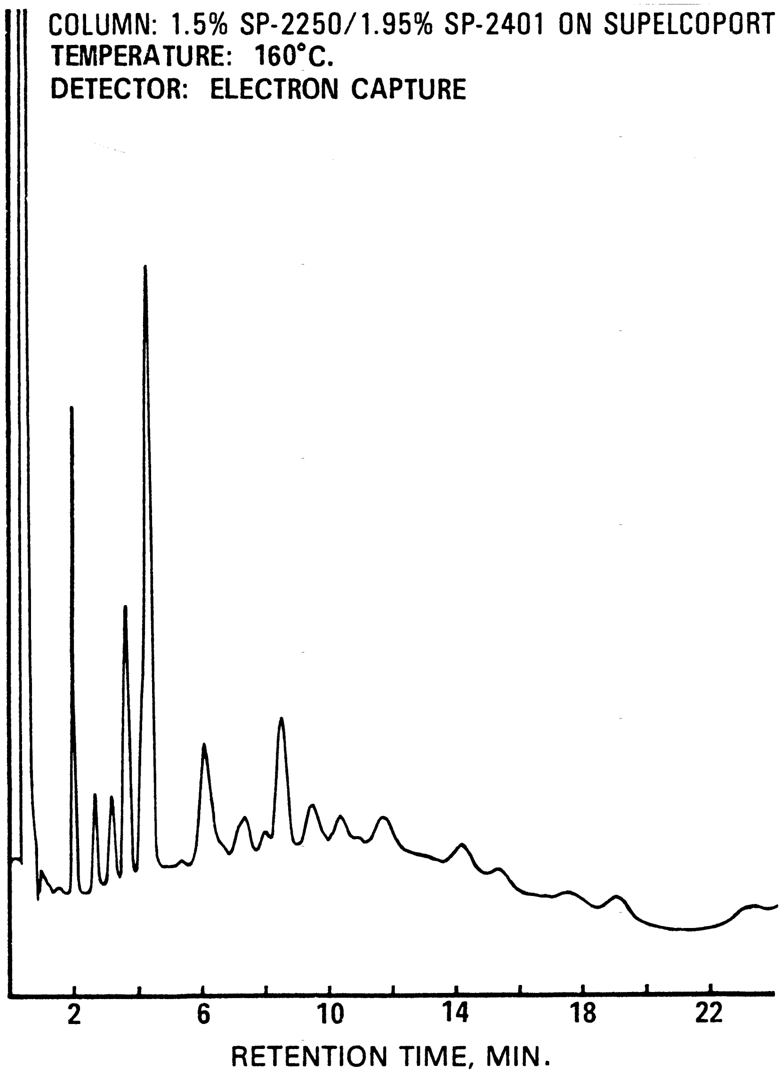

Figure 5. Gas chromatogram of PCB-1221.

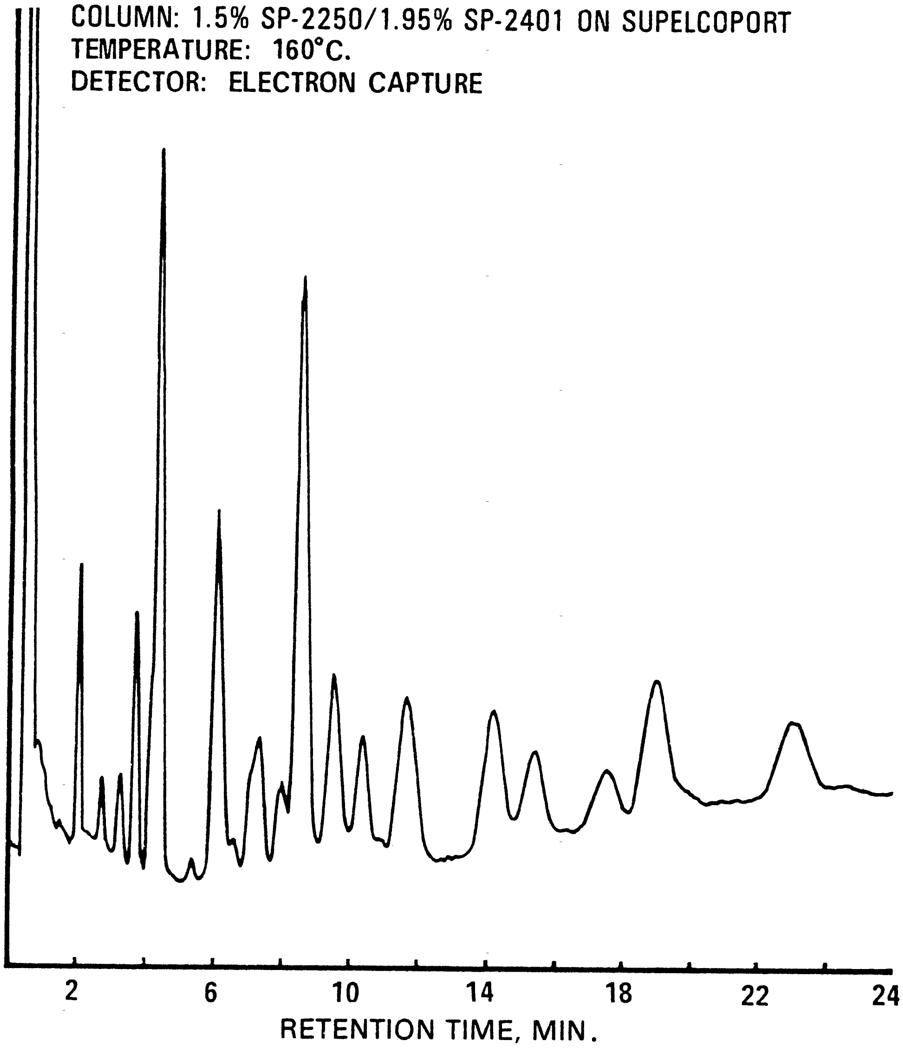

Figure 6. Gas chromatogram of PCB-1232.

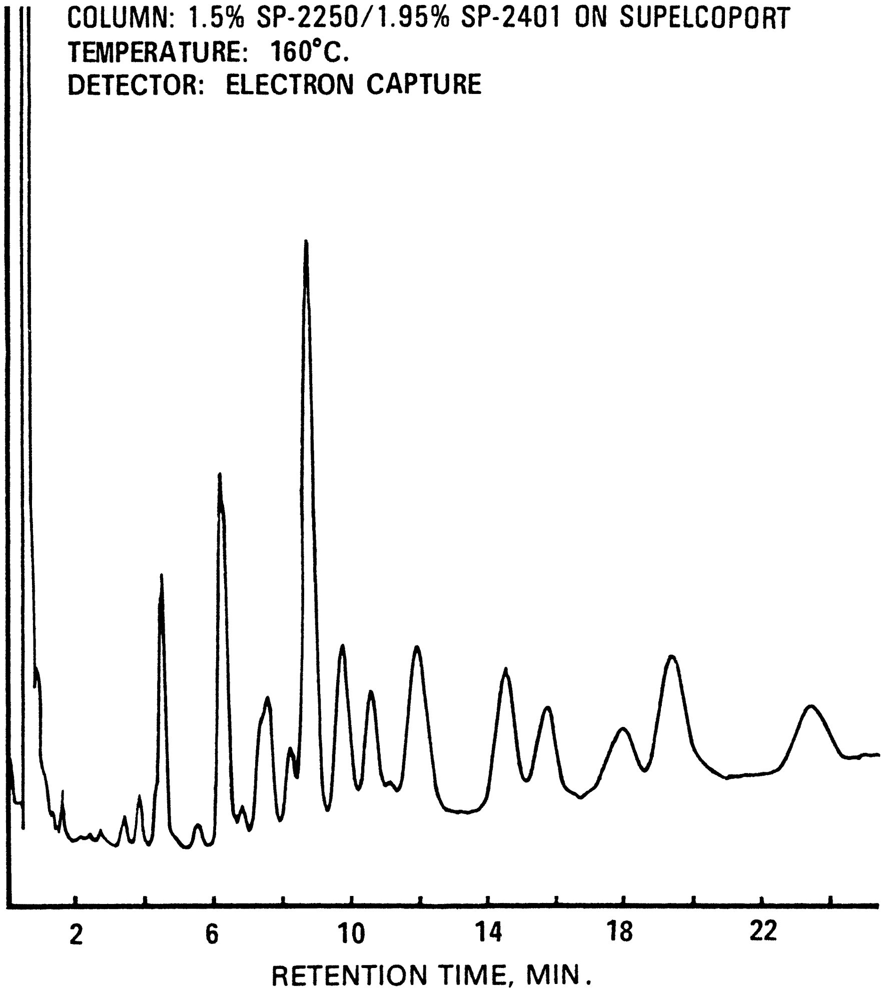

Figure 7. Gas chromatogram of PCB-1242.

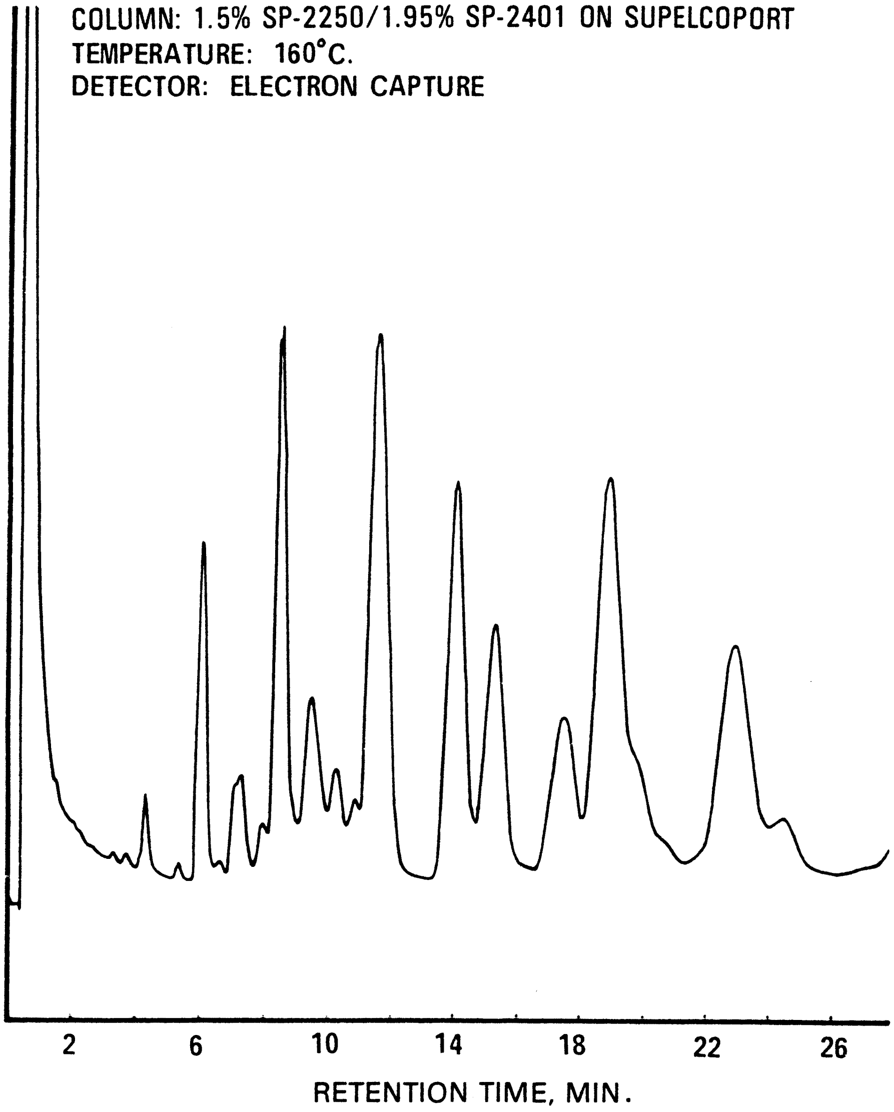

Figure 8. Gas chromatogram of PCB-1248.

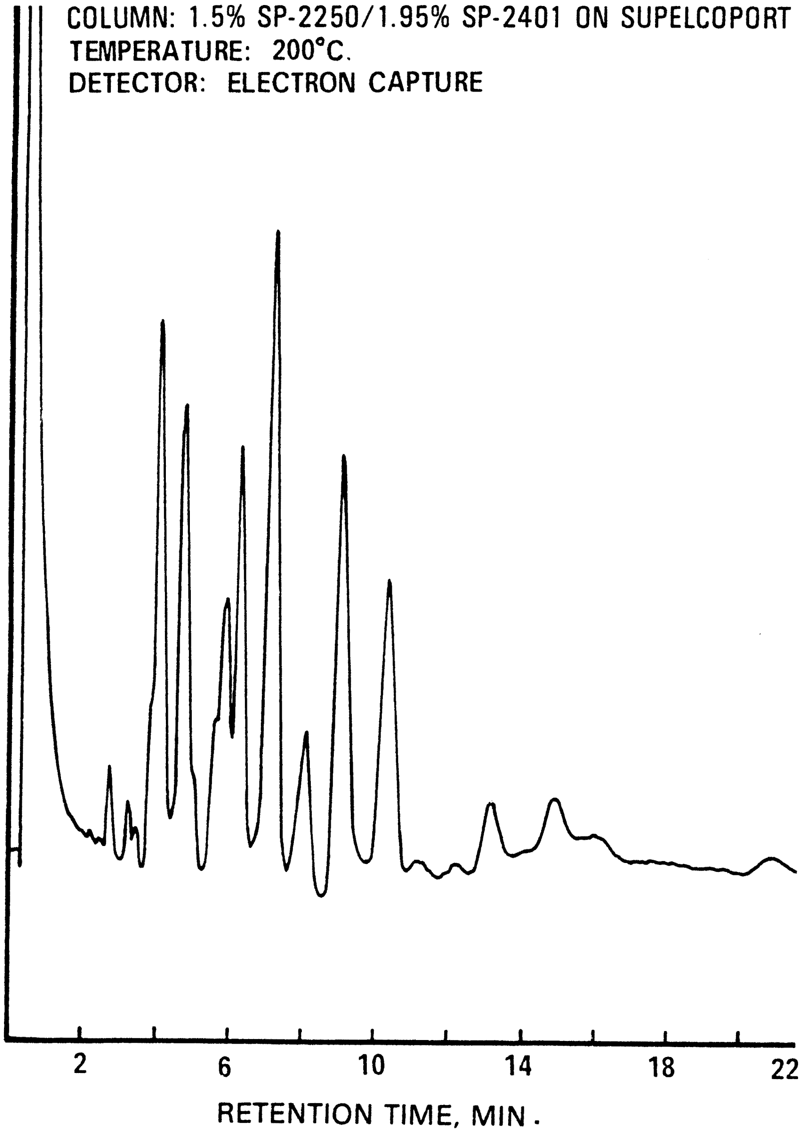

Figure 9. Gas chromatogram of PCB-1254.

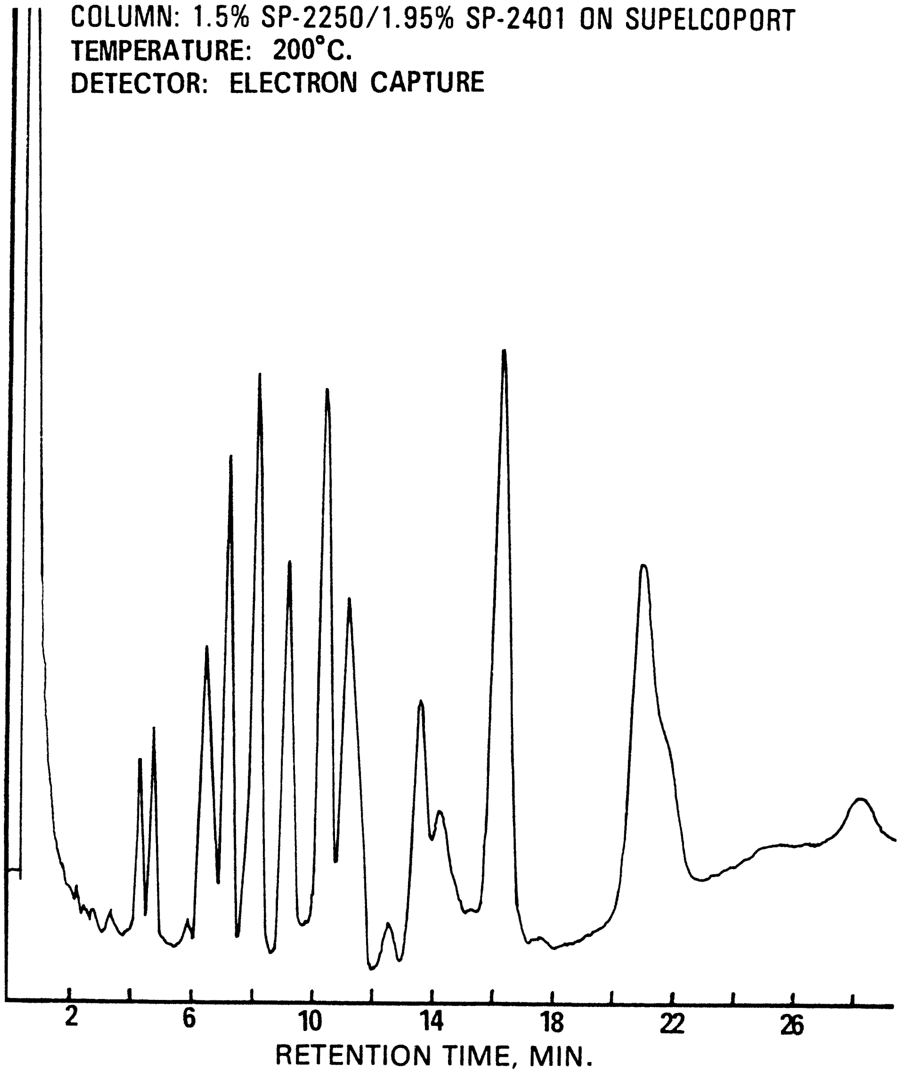

Figure 10. Gas chromatogram of PCB-1260.

METHOD 609—NITROAROMATICS AND ISOPHORONE

1. Scope and Application

1.1 This method covers the determination of certain nitroaromatics and isophorone. The following parameters may be determined by this method:

Parameter	STORET No.	CAS No.
2,4-Dinitrotoluene	34611	121–14–2
2,6-Dinitrotoluene	34626	606–20–2
Isophorone	34408	78–59–1
Nitrobenzene	34447	98–95–3

1.2 This is a gas chromatographic (GC) method applicable to the determination of the compounds listed above in municipal and industrial discharges as provided under 40 CFR 136.1. When this method is used to analyze unfamiliar samples for any or all of the compounds above, compound identifications should be supported by at least one additional qualitative technique. This method describes analytical conditions for a second gas chromatographic column that can be used to confirm measurements made with the primary column. Method 625 provides gas chromatograph/mass spectrometer (GC/MS) conditions appropriate for the qualitative and quantitative confirmation of results for all of the parameters listed above, using the extract produced by this method.

1.3 The method detection limit (MDL, defined in Section 14.1)[1] for each parameter is listed in Table 1. The MDL for a specific wastewater may differ from those listed, depending upon the nature of interferences in the sample matrix.

1.4 The sample extraction and concentration steps in this method are essentially the same as in Methods 606, 608, 611, and 612. Thus, a single sample may be extracted to measure the parameters included in the scope of each of these methods. When cleanup is required, the concentration levels must be high enough to permit selecting aliquots, as necessary, to apply appropriate cleanup procedures. The analyst is allowed the latitude, under Section 12, to select chromatographic conditions appropriate for the simultaneous measurement of combinations of these parameters.

1.5 Any modification of this method, beyond those expressly permitted, shall be considered as a major modification subject to application and approval of alternate test procedures under 40 CFR 136.4 and 136.5.

1.6 This method is restricted to use by or under the supervision of analysts experienced in the use of a gas chromatograph and in the interpretation of gas chromatograms. Each analyst must demonstrate the ability to generate acceptable results with this method using the procedure described in Section 8.2.

2. Summary of Method

2.1 A measured volume of sample, approximately 1–L, is extracted with methylene chloride using a separatory funnel. The methylene chloride extract is dried and exchanged to hexane during concentration to a volume of 10 mL or less. Isophorone and nitrobenzene are measured by flame ionization detector gas chromatography (FIDGC). The dinitrotoluenes are measured by electron capture detector gas chromatography (ECDGC).[2]

2.2 The method provides a Florisil column cleanup procedure to aid in the elimination of interferences that may be encountered.

3. Interferences

3.1 Method interferences may be caused by contaminants in solvents, reagents, glassware, and other sample processing hardware that lead to discrete artifacts and/or elevated baseliles in gas chromatograms. All of these materials must be routinely demonstrated to be free from interferences under the conditions of the analysis by running laboratory reagent blanks as described in Section 8.1.3.

3.1.1 Glassware must be scrupulously cleaned.[3] Clean all glassware as soon as possible after use by rinsing with the last solvent used in it. Solvent rinsing should be followed by detergent washing with hot water, and rinses with tap water and distilled water. The glassware should then be drained dry, and heated in a muffle furnace at 400 °C for 15 to 30 min. Some thermally stable materials, such as PCBs, may not be eliminated by this treatment. Solvent rinses with acetone and pesticide quality hexane may be substituted for the muffle furnace heating. Thorough rinsing with such solvents usually eliminates PCB interference. Volumetric ware should not be heated in a muffle furnace. After drying and cooling, glassware should be sealed and stored in a clean environment to prevent any accumulation of dust or other contaminants. Store inverted or capped with aluminum foil.

3.1.2 The use of high purity reagents and solvents helps to minimize interference problems. Purification of solvents by distillation in all-glass systems may be required.

3.2 Matrix interferences may be caused by contaminants that are co-extracted from the sample. The extent of matrix interferences will vary considerably from source to source, depending upon the nature and diversity of the industrial complex or municipality being sampled. The cleanup procedure in Section 11 can be used to overcome many of these interferences, but unique samples may require additional cleanup approaches to achieve the MDL listed in Table 1.

4. Safety

4.1 The toxicity or carcinogenicity of each reagent used in this method has not been precisely defined; however, each chemical compound should be treated as a potential health hazard. From this viewpoint, exposure to these chemicals must be reduced to the lowest possible level by whatever means available. The laboratory is responsible for maintaining a current awareness file of OSHA regulations regarding the safe handling of the chemicals specified in this method. A reference file of material data handling sheets should also be made available to all personnel involved in the chemical analysis. Additional references to laboratory safety are available and have been identified[4-6] for the information of the analyst.

5. Apparatus and Materials

5.1 Sampling equipment, for discrete or composite sampling.

5.1.1 Grab sample bottle—1–L or 1-qt, amber glass, fitted with a screw cap lined with Teflon. Foil may be substituted for Teflon if the sample is not corrosive. If amber bottles are not available, protect samples from light. The bottle and cap liner must be washed, rinsed with acetone or methylene chloride, and dried before use to minimize contamination.

5.1.2 Automatic sampler (optional)—The sampler must incorporate glass sample containers for the collection of a minimum of 250 mL of sample. Sample containers must be kept refrigerated at 4 °C and protected from light during compositing. If the sampler uses a peristaltic pump, a minimum length of compressible silicone rubber tubing may be used. Before use, however, the compressible tubing should be thoroughly rinsed with methanol, followed by repeated rinsings with distilled water to minimize the potential for contamination of the sample. An integrating flow meter is required to collect flow proportional composites.

5.2 Glassware (All specifications are suggested. Catalog numbers are included for illustration only.):

5.2.1 Separatory funnel—2–L, with Teflon stopcock.

5.2.2 Drying column—Chromatographic column, approximately 400 mm long × 19 mm ID, with coarse frit filter disc.

5.2.3 Chromatographic column—100 mm long × 10 mm ID, with Teflon stopcock.

5.2.4 Concentrator tube, Kuderna-Danish—10-mL, graduated (Kontes K–570050–1025 or equivalent). Calibration must be checked at the volumes employed in the test. Ground glass stopper is used to prevent evaporation of extracts.

5.2.5 Evaporative flask, Kuderna-Danish—500-mL (Kontes K–570001–0500 or equivalent). Attach to concentrator tube with springs.

5.2.6 Snyder column, Kuderna-Danish—Three-ball macro (Kontes K–503000–0121 or equivalent).

5.2.7 Snyder column, Kuderna-Danish—Two-ball micro (Kontes K–569001–0219 or equivalent).

5.2.8 Vials—10 to 15-mL, amber glass, with Teflon-lined screw cap.

5.3 Boiling chips—Approximately 10/40 mesh. Heat to 400 °C for 30 min or Soxhlet extract with methylene chloride.

5.4 Water bath—Heated, with concentric ring cover, capable of temperature control (±2 °C). The bath should be used in a hood.

5.5 Balance—Analytical, capable of accurately weighing 0.0001 g.

5.6 Gas chromatograph—An analytical system complete with gas chromatograph suitable for on-column injection and all required accessories including syringes, analytical columns, gases, detector, and strip-chart recorder. A data system is recommended for measuring peak areas.

5.6.1 Column 1—1.2 m long × 2 or 4 mm ID glass, packed with 1.95% QF–1/1.5% OV–17 on Gas-Chrom Q (80/100 mesh) or equivalent. This column was used to develop the method performance statements given in Section 14. Guidelines for the use of alternate column packings are provided in Section 12.1.

5.6.2 Column 2—3.0 m long × 2 or 4 mm ID glass, packed with 3% OV–101 on Gas-Chrom Q (80/100 mesh) or equivalent.

5.6.3 Detectors—Flame ionization and electron capture detectors. The flame ionization detector (FID) is used when determining isophorone and nitrobenzene. The electron capture detector (ECD) is used when determining the dinitrotoluenes. Both detectors have proven effective in the analysis of wastewaters and were used in develop the method performance statements in Section 14. Guidelines for the use to alternate detectors are provided in Section 12.1.

6. Reagents

6.1 Reagent water—Reagent water is defined as a water in which an interferent is not observed at the MDL of the parameters of interest.

6.2 Sodium hydroxide solution (10 N)—Dissolve 40 g of NaOH (ACS) in reagent water and dilute to 100 mL.

6.3 Sulfuric acid (1+1)—Slowly, add 50 mL of H_2SO_4 (ACS, sp. gr. 1.84) to 50 mL of reagent water.

6.4 Acetone, hexane, methanol, methylene chloride—Pesticide quality or equivalent.

6.5 Sodium sulfate—(ACS) Granular, anhydrous. Purify by heating at 400 °C for 4 h in a shallow tray.

6.6 Florisil—PR grade (60/100 mesh). Purchase activated at 1250 °F and store in dark in glass containers with ground glass stoppers or foil-lined screw caps. Before use, activate each batch at least 16 h at 200 °C in a foil-covered glass container and allow to cool.

6.7 Stock standard solutions (1.00 μg/μL)—Stock standard solutions can be prepared from pure standard materials or purchased as certified solutions.

6.7.1 Prepare stock standard solutions by accurately weighing about 0.0100 g of pure material. Dissolve the material in hexane and dilute to volume in a 10-mL volumetric flask. Larger volumes can be used at the convenience of the analyst. When compound purity is assayed to be 96% or greater, the weight can be used without correction to calculate the concentration of the stock standard. Commercially prepared stock standards can be used at any concentration if they are certified by the manufacturer or by an independent source.

6.7.2 Transfer the stock standard solutions into Teflon-sealed screw-cap bottles.

Store at 4 °C and protect from light. Stock standard solutions should be checked frequently for signs of degradation or evaporation, especially just prior to preparing calibration standards from them.

6.7.3 Stock standard solutions must be replaced after six months, or sooner if comparison with check standards indicates a problem.

6.8 Quality control check sample concentrate—See Section 8.2.1.

7. Calibration

7.1 Establish gas chromatographic operating conditions equivalent to those given in Table 1. The gas chromatographic system can be calibrated using the external standard technique (Section 7.2) or the internal standard technique (Section 7.3).

7.2 External standard calibration procedure:

7.2.1 Prepare calibration standards at a minimum of three concentration levels for each parameter of interest by adding volumes of one or more stock standards to a volumetric flask and diluting to volume with hexane. One of the external standards should be at a concentration near, but above, the MDL (Table 1) and the other concentrations should correspond to the expected range of concentrations found in real samples or should define the working range of the detector.

7.2.2 Using injections of 2 to 5 µL, analyze each calibration standard according to Section 12 and tabulate peak height or area responses against the mass injected. The results can be used to prepare a calibration curve for each compound. Alternatively, if the ratio of response to amount injected (calibration factor) is a constant over the working range (<10% relative standard deviation, RSD) linearity through the origin can be assumed and the average ratio or calibration factor can be used in place of a calibration curve.

7.3 Internal standard calibration procedure—To use this approach, the analyst must select one or more internal standards that are similar in analytical behavior to the compounds of interest. The analyst must further demonstrate that the measurement of the internal standard is not affected by method or matrix interferences. Because of these limitations, no internal standard can be suggested that is applicable to all samples.

7.3.1 Prepare calibration standards at a minimum of three concentration levels for each parameter of interest by adding volumes of one or more stock standards to a volumetric flash. To each calibration standard, add a known constant amount of one or more internal standards, and dilute to volume with hexane. One of the standards should be at a concentration near, but above, the MDL and the other concentrations should correspond to the expected range of concentrations found in real samples or should define the working range of the detector.

7.3.2 Using injections of 2 to 5 µL, analyze each calibration standard according to Section 12 and tabulate peak height or area responses against concentration for each compound and internal standard. Calculate response factors (RF) for each compound using Equation 1.

Equation 1.

$$RF = \frac{(A_s)(C_{is})}{(A_{is})(C_s)}$$

where:

A_s=Response for the parameter to be measured.

A_{is}=Response for the internal standard.

C_{is}=Concentration of the internal standard (µg/L).

C_s=Concentration of the parameter to be measured (µg/L).

If the RF value over the working range is a constant (<10% RSD), the RF can be assumed to be invariant and the average RF can be used for calculations. Alternatively, the results can be used to plot a calibration curve of response ratios, A_s/A_{is}, vs. RF.

7.4 The working calibration curve, calibration factor, or RF must be verified on each working day by the measurement of one or more calibration standards. If the response for any parameter varies from the predicted response by more than ±15%, a new calibration curve must be prepared for that compound.

7.5 Before using any cleanup procedure, the analyst must process a series of calibration standards through the procedure to validate elution patterns and the absence of interferences from the reagents.

8. Quality Control

8.1 Each laboratory that uses this method is required to operate a formal quality control program. The minimum requirements of this program consist of an initial demonstration of laboratory capability and an ongoing analysis of spiked samples to evaluate and document data quality. The laboratory must maintain records to document the quality of data that is generated. Ongoing data quality checks are compared with established performance criteria to determine if the results of analyses meet the performance characteristics of the method. When results of sample spikes indicate atypical method performance, a quality control check standard must be analyzed to confirm that the measurements were performed in an in-control mode of operation.

8.1.1 The analyst must make an initial, one-time, demonstration of the ability to generate acceptable accuracy and precision with this method. This ability is established as described in Section 8.2.

8.1.2 In recognition of advances that are occurring in chromatography, the analyst is permitted certain options (detailed in Sections 10.4, 11.1, and 12.1) to improve the separations or lower the cost of measurements. Each time such a modification is made to the method, the analyst is required to repeat the procedure in Section 8.2.

8.1.3 Before processing any samples, the analyst must analyze a reagent water blank to demonstrate that interferences from the analytical system and glassware are under control. Each time a set of samples is extracted or reagents are changed, a reagent water blank must be processed as a safeguard against laboratory contamination.

8.1.4 The laboratory must, on an ongoing basis, spike and analyze a minimum of 10% of all samples to monitor and evaluate laboratory data quality. This procedure is described in Section 8.3.

8.1,5 The laboratory must, on an ongoing basis, demonstrate through the analyses of quality control check standards that the operation of the measurement system is in control. This procedure is described in Section 8.4. The frequency of the check standard analyses is equivalent to 10% of all samples analyzed but may be reduced if spike recoveries from samples (Section 8.3) meet all specified quality control criteria.

8.1.6 The laboratory must maintain performance records to document the quality of data that is generated. This procedure is described in Section 8.5.

8.2 To establish the ability to generate acceptable accuracy and precision, the analyst must perform the following operations.

8.2.1 A quality control (QC) check sample concentrate is required containing each parameter of interest in acetone at a concentration of 20 μg/mL for each dinitrotoluene and 100 μg/mL for isophorone and nitrobenzene. The QC check sample concentrate must be obtained from the U.S. Environmental Protection Agency, Environmental Monitoring and Support Laboratory in Cincinnati, Ohio, if available. If not available from that source, the QC check sample concentrate must be obtained from another external source. If not available from either source above, the QC check sample concentrate must be prepared by the laboratory using stock standards prepared independently from those used for calibration.

8.2.2 Using a pipet, prepare QC check samples at the test concentrations shown in Table 2 by adding 1.00 mL of QC check sample concentrate to each of four 1–L aliquots of reagent water.

8.2.3 Analyze the well-mixed QC check samples according to the method beginning in Section 10.

8.2.4 Calculate the average recovery ($\bar{X}$) in μg/L, and the standard deviation of the recovery (s) in μg/L, for each parameter using the four results.

8.2.5 For each parameter compare s and $\bar{X}$ with the corresponding acceptance criteria for precision and accuracy, respectively, found in Table 2. If s and $\bar{X}$ for all parameters of interest meet the acceptance criteria, the system performance is acceptable and analysis of actual samples can begin. If any individual s exceeds the precision limit or any individual $\bar{X}$ falls outside the range for accuracy, the system performance is unacceptable for that parameter. Locate and correct the source of the problem and repeat the test for all parameters of interest beginning with Section 8.2.2.

8.3 The laboratory must, on an ongoing basis, spike at least 10% of the samples from each sample site being monitored to assess accuracy. For laboratories analyzing one to ten samples per month, at least one spiked sample per month is required.

8.3.1 The concentration of the spike in the sample should be determined as follows:

8.3.1.1 If, as in compliance monitoring, the concentration of a specific parameter in the sample is being checked against a regulatory concentration limit, the spike should be at that limit or 1 to 5 times higher than the background concentration determined in Section 8.3.2, whichever concentration would be larger.

8.3.1.2 If the concentration of a specific parameter in the sample is not being checked against a limit specific to that parameter, the spike should be at the test concentration in Section 8.2.2 or 1 to 5 times higher than the background concentration determined in Section 8.3.2, whichever concentration would be larger.

8.3.1.3 If it is impractical to determile background levels before spiking (e.g., maximum holding times will be exceeded), the spike concentration should be (1) the regulatory concentration limit, if any; or, if none (2) the larger of either 5 times higher than the expected background concentration or the test concentration in Section 8.2.2.

8.3.2 Analyze one sample aliquot to determine the background concentration (B) of each parameter. If necessary, prepare a new QC check sample concentrate (Section 8.2.1) appropriate for the background concentrations in the sample. Spike a second sample aliquot with 1.0 mL of the QC check sample concentrate and analyze it to determine the concentration after spiking (A) of each parameter. Calculate each percent recovery (P) as $100 (A-B)\%/T$, where T is the known true value of the spike.

8.3.3 Compare the percent recovery (P) for each parameter with the corresponding QC acceptance criteria found in Table 2. These acceptance criteria were calculated to include an allowance for error in measurement of both the background and spike concentrations, assuming a spike to background ratio of 5:1. This error will be accounted for to the extent that the analyst's spike to background ratio approaches 5:1.[7] If spiking was performed at a concentration lower than the test concentration in Section 8.2.2, the analyst must use either the QC acceptance criteria in Table 2, or optional QC acceptance criteria calculated for the specific spike concentration. To calculate optional acceptance criteria for the recovery of a parameter: (1) Calculate accuracy (X') using the equation in Table 3, substituting the spike concentration (T) for C; (2) calculate overall precision (S') using the equation in Table 3, substituting X' for $\bar{X}$8; (3) calculate the range for recovery at the spike concentration as $(100\ X'/T) \pm 2.44\ (100\ S'/T)\%$.[7]

8.3.4 If any individual P falls outside the designated range for recovery, that parameter has failed the acceptance criteria. A check standard containing each parameter that failed the criteria must be analyzed as described in Section 8.4.

8.4. If any parameter fails the acceptance criteria for recovery in Section 8.3, a QC check standard containing each parameter that failed must be prepared and analyzed.

NOTE: The frequency for the required analysis of a QC check standard will depend upon the number of parameters being simultaneously tested, the complexity of the sample matrix, and the performance of the laboratory.

8.4.1 Prepare the QC check standard by adding 1.0 mL of QC check sample concentrate (Section 8.2.1 or 8.3.2) to 1 L of reagent water. The QC check standard needs only to contain the parameters that failed criteria in the test in Section 8.3.

8.4.2 Analyze the QC check standard to determine the concentration measured (A) of each parameter. Calculate each percent recovery (P_s) as 100 (A/T)%, where T is the true value of the standard concentration.

8.4.3 Compare the percent recovery (P_s) for each parameter with the corresponding QC acceptance criteria found in Table 2. Only parameters that failed the test in Section 8.3 need to be compared with these criteria. If the recovery of any such parameter falls outside the designated range, the laboratory performance for that parameter is judged to be out of control, and the problem must be immediately identified and corrected. The analytical result for that parameter in the unspiked sample is suspect and may not be reported for regulatory compliance purposes.

8.5 As part of QC program for the laboratory, method accuracy for wastewater samples must be assessed and records must be maintained. After the analysis of five spiked wastewater samples as in Section 8.3, calculate the average percent recovery ($\bar{P}$) and the standard deviation of the percent recovery (s_p). Express the accuracy assessment as a percent recovery interval from $\bar{P} - 2s_p$ to $\bar{P} + 2s_p$. If $\bar{P} = 90\%$ and $s_p = 10\%$, for example, the accuracy interval is expressed as 70–110%. Update the accuracy assessment for each parameter on a regular basis (e.g. after each five to ten new accuracy measurements).

8.6 It is recommended that the laboratory adopt additional quality assurance practices for use with this method. The specific practices that are most productive depend upon the needs of the laboratory and the nature of the samples. Field duplicates may be analyzed to assess the precision of the environmental measurements. When doubt exists over the identification of a peak on the chromatogram, confirmatory techniques such as gas chromatography with a dissimilar column, specific element detector, or mass spectrometer must be used. Whenever possible, the laboratory should analyze standard reference materials and participate in relevant performance evaluation studies.

9. Sample Collection, Preservation, and Handling

9.1 Grab samples must be collected in glass containers. Conventional sampling practices[8] should be followed, except that the bottle must not be prerinsed with sample before collection. Composite samples should be collected in refrigerated glass containers in accordance with the requirements of the program. Automatic sampling equipment must be as free as possible of Tygon tubing and other potential sources of contamination.

9.2 All samples must be iced or refrigerated at 4 °C from the time of collection until extraction.

9.3 All samples must be extracted within 7 days of collection and completely analyzed within 40 days of extraction.[2]

10. Sample Extraction

10.1 Mark the water meniscus on the side of the sample bottle for later determination of sample volume. Pour the entire sample into a 2–L separatory funnel. Check the pH of the sample with wide-range pH paper and adjust to within the range of 5 to 9 with sodium hydroxide solution or sulfuric acid.

10.2 Add 60 mL of methylene chloride to the sample bottle, seal, and shake 30 s to rinse the inner surface. Transfer the solvent to the separatory funnel and extract the sample by shaking the funnel for 2 min. with periodic venting to release excess pressure. Allow the organic layer to separate from the water phase for a minimum of 10 min. If the emulsion interface between layers is more than one-third the volume of the solvent layer, the analyst must employ mechanical techniques to complete the phase separation. The optimum technique depends upon the sample, but may include stirring, filtration of the emulsion through glass wool, centrifugation, or other physical methods. Collect the methylene chloride extract in a 250-mL Erlenmeyer flask.

10.3 Add a second 60-mL volume of methylene chloride to the sample bottle and repeat the extraction procedure a second time, combining the extracts in the Erlenmeyer flask. Perform a third extraction in the same manner.

10.4 Assemble a Kuderna-Danish (K-D) concentrator by attaching a 10-mL concentrator tube to a 500-mL evaporative flask. Other concentration devices or techniques may be used in place of the K-D concentrator if the requirements of Section 8.2 are met.

10.5 Pour the combined extract through a solvent-rinsed drying column containing about 10 cm of anhydrous sodium sulfate, and collect the extract in the K-D concentrator. Rinse the Erlenmeyer flask and column with 20 to 30 mL of methylene chloride to complete the quantitative transfer.

10.6 Sections 10.7 and 10.8 describe a procedure for exchanging the methylene chloride solvent to hexane while concentrating the extract volume to 1.0 mL. When it is not necessary to achieve the MDL in Table 2, the solvent exchange may be made by the addition of 50 mL of hexane and concentration to 10 mL as described in Method 606, Sections 10.7 and 10.8.

10.7 Add one or two clean boiling chips to the evaporative flask and attach a three-ball Snyder column. Prewet the Snyder column by adding about 1 mL of methylene chloride to the top. Place the K-D apparatus on a hot water bath (60 to 65 °C) so that the concentrator tube is partially immersed in the hot water, and the entire lower rounded surface of the flask is bathed with hot vapor. Adjust the vertical position of the apparatus and the water temperature as required to complete the concentration in 15 to 20 min. At the proper rate of distillation the balls of the column will actively chatter but the chambers will not flood with condensed solvent. When the apparent volume of liquid reaches 1 mL, remove the K-D apparatus and allow it to drain and cool for at least 10 min.

10.8 Remove the Snyder column and rinse the flask and its lower joint into the concentrator tube with 1 to 2 mL of methylene chloride. A 5-mL syringe is recommended for this operation. Add 1 to 2 mL of hexane and a clean boiling chip to the concentrator tube and attach a two-ball micro-Snyder column. Prewet the column by adding about 0.5 mL of hexane to the top. Place the micro-K-D apparatus on a hot water bath (60 to 65 °C) so that the concentrator tube is partially immersed in the hot water. Adjust the vertical position of the apparatus and the water temperature as required to complete the concentration in 5 to 10 min. At the proper rate of distillation the balls of the column will actively chatter but the chambers will not flood. When the apparent volume of liquid reaches 0.5 mL, remove the K-D apparatus and allow it to drain and cool for at least 10 min.

10.9 Remove the micro-Snyder column and rinse its lower joint into the concentrator tube with a minimum amount of hexane. Adjust the extract volume to 1.0 mL. Stopper the concentrator tube and store refrigerated if further processing will not be performed immediately. If the extract will be stored longer than two days, it should be transferred to a Teflon-sealed screw-cap vial. If the sample extract requires no further cleanup, proceed with gas chromatographic analysis (Section 12). If the sample requires further cleanup, proceed to Section 11.

10.10 Determine the original sample volume by refilling the sample bottle to the mark and transferring the liquid to a 1000-mL graduated cylinder. Record the sample volume to the nearest 5 mL.

11. Cleanup and Separation

11.1 Cleanup procedures may not be necessary for a relatively clean sample matrix. If particular circumstances demand the use of a cleanup procedure, the analyst may use the procedure below or any other appropriate procedure. However, the analyst first must demonstrate that the requirements of Section 8.2 can be met using the method as revised to incorporate the cleanup procedure.

11.2 Florisil column cleanup:

11.2.1 Prepare a slurry of 10 g of activated Florisil in methylene chloride/hexane (1+9)(V/V) and place the Florisil into a chromatographic column. Tap the column to settle the Florisil and add 1 cm of anhydrous sodium sulfate to the top. Adjust the elution rate to about 2 mL/min.

11.2.2 Just prior to exposure of the sodium sulfate layer to the air, quantitatively transfer the sample extract onto the column using an additional 2 mL of hexane to complete the transfer. Just prior to exposure of the sodium sulfate layer to the air, add 30 mL of methylene chloride/hexane (1 + 9)(V/V) and continue the elution of the column. Discard the eluate.

11.2.3 Next, elute the column with 30 mL of acetone/methylene chloride (1 + 9)(V/V) into a 500-mL K-D flask equipped with a 10-mL concentrator tube. Concentrate the collected fraction as in Sections 10.6, 10.7, 10.8, and 10.9 including the solvent exchange to 1 mL of hexane. This fraction should contain the nitroaromatics and isophorone. Analyze by gas chromatography (Section 12).

12. Gas Chromatography

12.1 Isophorone and nitrobenzene are analyzed by injection of a portion of the extract into an FIDGC. The dinitrotoluenes are analyzed by a separate injection into an ECDGC. Table 1 summarizes the recommended operating conditions for the gas chromatograph.

Included in this table are retention times and MDL that can be achieved under these conditions. Examples of the separations achieved by Column 1 are shown in Figures 1 and 2. Other packed or capillary (open-tubular) columns, chromatographic conditions, or detectors may be used if the requirements of Section 8.2 are met.

12.2 Calibrate the system daily as described in Section 7.

12.3 If the internal standard calibration procedure is being used, the internal standard must be added to the same extract and mixed thoroughly immediately before injection into the gas chromatograph.

12.4 Inject 2 to 5 µL of the sample extract or standard into the gas chromatograph using the solvent-flush technique.[9] Smaller (1.0 µL) volumes may be injected if automatic devices are employed. Record the volume injected to the nearest 0.05 µL, the total extract volume, and the resulting peak size in area or peak height units.

12.5 Identify the parameters in the sample by comparing the retention times of the peaks in the sample chromatogram with those of the peaks in standard chromatograms. The width of the retention time window used to make identifications should be based upon measurements of actual retention time variations of standards over the course of a day. Three times the standard deviation of a retention time for a compound can be used to calculate a suggested window size; however, the experience of the analyst should weigh heavily in the interpretation of chromatograms.

12.6 If the response for a peak exceeds the working range of the system, dilute the extract and reanalyze.

12.7 If the measurement of the peak response is prevented by the presence of interferences, further cleanup is required.

13. Calculations

13.1 Determine the concentration of individual compounds in the sample.

13.1.1 If the external standard calibration procedure is used, calculate the amount of material injected from the peak response using the calibration curve or calibration factor determined in Section 7.2.2. The concentration in the sample can be calculated from Equation 2.

$$\text{Concentration } (\mu\text{g/L}) = \frac{(A)(V_t)}{(V_i)(V_s)}$$

Equation 2

where:

A=Amount of material injected (ng).

V_i=Volume of extract injected (µL).

V_t=Volume of total extract (µL).

V_s=Volume of water extracted (mL).

13.1.2 If the internal standard calibration procedure is used, calculate the concentration in the sample using the response factor (RF) determined in Section 7.3.2 and Equation 3.

$$\text{Concentration } (\mu\text{g/L}) = \frac{(A_s)(I_s)}{(A_{is})(RF)(V_o)}$$

Equation 3

where:

A_s=Response for the parameter to be measured.

A_{is}=Response for the internal standard.

I_s=Amount of internal standard added to each extract (µg).

V_o=Volume of water extracted (L).

13.2 Report results in µg/L without correction for recovery data. All QC data obtained should be reported with the sample results.

14. Method Performance

14.1 The method detection limit (MDL) is defined as the minimum concentration of a substance that can be measured and reported with 99% confidence that the value is above zero.[1] The MDL concentrations listed in Table 1 were obtained using reagent water.[10] Similar results were achieved using representative wastewaters. The MDL actually achieved in a given analysis will vary depending on instrument sensitivity and matrix effects.

14.2 This method has been tested for linearity of spike recovery from reagent water and has been demonstrated to be applicable over the concentration range from 7×MDL to 1000×MDL.[10]

14.3 This method was tested by 18 laboratories using reagent water, drinking water, surface water, and three industrial wastewaters spiked at six concentrations over the range 1.0 to 515 µg/L.[11] Single operator precision, overall precision, and method accuracy were found to be directly related to the concentration of the parameter and essentially independent of the sample matrix. Linear equations to describe these relationships are presented in Table 3.

REFERENCES

1. 40 CFR part 136, appendix B.

2. ''Determination of Nitroaromatic Compounds and Isophorone in Industrial and Municipal Wastewaters,'' EPA 600/ 4–82–024, National Technical Information Service, PB82–208398, Springfield, Virginia 22161, May 1982.

3. ASTM Annual Book of Standards, Part 31, D3694–78. ''Standard Practices for Preparation of Sample Containers and for Preservation of Organic Constituents,'' American Society for Testing and Materials, Philadelphia.

4. ''Carcinogens—Working With Carcinogens,'' Department of Health, Education, and Welfare, Public Health Service, Center for Disease Control, National Institute for Occupational Safety and Health, Publication No. 77–206, August 1977.

5. ''OSHA Safety and Health Standards, General Industry,'' (29 CFR part 1910), Occupational Safety and Health Administration, OSHA 2206 (Revised, January 1976).

6. ''Safety in Academic Chemistry Laboratories,'' American Chemical Society Publication, Committee on Chemical Safety, 3rd Edition, 1979.

7. Provost, L.P., and Elder, R.S. ''Interpretation of Percent Recovery Data,'' *American Laboratory*, *15*, 58–63 (1983). (The value 2.44 used in the equation in Section 8.3.3 is two times the value 1.22 derived in this report.)

8. ASTM Annual Book of Standards, Part 31, D3370–76. ''Standard Practices for Sampling Water,'' American Society for Testing and Materials, Philadelphia.

9. Burke, J.A. ''Gas Chromatography for Pesticide Residue Analysis; Some Practical Aspects,'' *Journal of the Association of Official Analytical Chemists*, *48*, 1037 (1965).

10. ''Determination of Method Detection Limit and Analytical Curve for EPA Method 609—Nitroaromatics and Isophorone,'' Special letter report for EPA Contract 68–03–2624, U.S. Environmental Protection Agency, Environmental Monitoring and Support Laboratory, Cincinnati, Ohio 45268, June 1980.

11. ''EPA Method Study 19, Method 609 (Nitroaromatics and Isophorone),'' EPA 600/4–84–018, National Technical Information Service, PB84–176908, Springfield, Virginia 22161, March 1984.

TABLE 1—CHROMATOGRAPHIC CONDITIONS AND METHOD DETECTION LIMITS

Parameter	Retention time (min)		Method detection limit (µg/L)	
	Col. 1	Col. 2	ECDGC	FIDGC
Nitrobenzene	3.31	4.31	13.7	3.6
2,6-Dinitrotoluene	3.52	4.75	0.01	–
Isophorone	4.49	5.72	15.7	5.7
2,4-Dinitrotoluene	5.35	6.54	0.02	–

AAColumn 1 conditions: Gas-Chrom Q (80/100 mesh) coated with 1.95% QF–1/1.5% OV–17 packed in a 1.2 m long × 2 mm or 4 mm ID glass column. A 2 mm ID column and nitrogen carrier gas at 44 mL/min flow rate were used when determining isophorone and nitrobenzene by FIDGC. The column temperature was held isothermal at 85 °C. A 4 mm ID column and 10% methane/90% argon carrier gas at 44 mL/min flow rate were used when determining the dinitrotoluenes by ECDGC. The column temperature was held isothermal at 145 °C.

AAColumn 2 conditions: Gas-Chrom Q (80/100 mesh) coated with 3% OV–101 packed in a 3.0 m long × 2 mm or 4 mm ID glass column. A 2 mm ID column and nitrogen carrier gas at 44 mL/min flow rate were used when determining isophorone and nitrobenzene by FIDGC. The column temperature was held isothermal at 100 °C. A 4 mm ID column and 10% methane/90% argon carrier gas at 44 mL/min flow rate were used when determining the dinitrotoluenes by ECDGC. The column temperature was held isothermal at 150 °C.

TABLE 2—QC ACCEPTANCE CRITERIA—METHOD 609

Parameter	Test Conc. (µg/L)	Limit for s (µg/L)	Range for $\bar{X}$ (µg/L)	Range for P, P_s (%)
2,4-Dinitrotoluene	20	5.1	3.6–22.8	6–125
2,6-Dinitrotoluene	20	4.8	3.8–23.0	8–126
Isophorone	100	32.3	8.0–100.0	D–117
Nitrobenzene	100	33.3	25.7–100.0	6–118

s=Standard deviation of four recovery measurements, in µg/L (Section 8.2.4).
X=Average recovery for four recovery measurements, in µg/L (Section 8.2.4).
P, P_s=Percent recovery measured (Section 8.3.2, Section 8.4.2).
D=Detected; result must be greater than zero.

NOTE: These criteria are based directly upon the method performance data in Table 3. Where necessary, the limits for recovery have been broadened to assure applicability of the limits to concentrations below those used to develop Table 3.

TABLE 3—METHOD ACCURACY AND PRECISION AS FUNCTIONS OF CONCENTRATION—METHOD 609

Parameter	Accuracy, as recovery, X′ (µg/L)	Single analyst precision, s_r' (µg/L)	Overall precision, S′ (µg/L)
2,4-Dinitrotoluene	0.65C+0.22	$0.20\bar{X}+0.08$	$0.37\bar{X}-0.07$
2,6-Dinitrotoluene	0.66C+0.20	$0.19\bar{X}+0.06$	$0.36\bar{X}-0.00$
Isophorone	0.49C+2.93	$0.28\bar{X}+2.77$	$0.46\bar{X}+0.31$
Nitrobenzene	0.60C+2.00	$0.25\bar{X}+2.53$	$0.37\bar{X}-0.78$

X′=Expected recovery for one or more measurements of a sample containing a concentration of C, in µg/L.
s_r'=Expected single analyst standard deviation of measurements at an average concentration found of X, in µg/L.
S′=Expected interlaboratory standard deviation of measurements at an average concentration found of X, in µg/L.
C=True value for the concentration, in µg/L.
X=Average recovery found for measurements of samples containing a concentration of C, in µg/L.

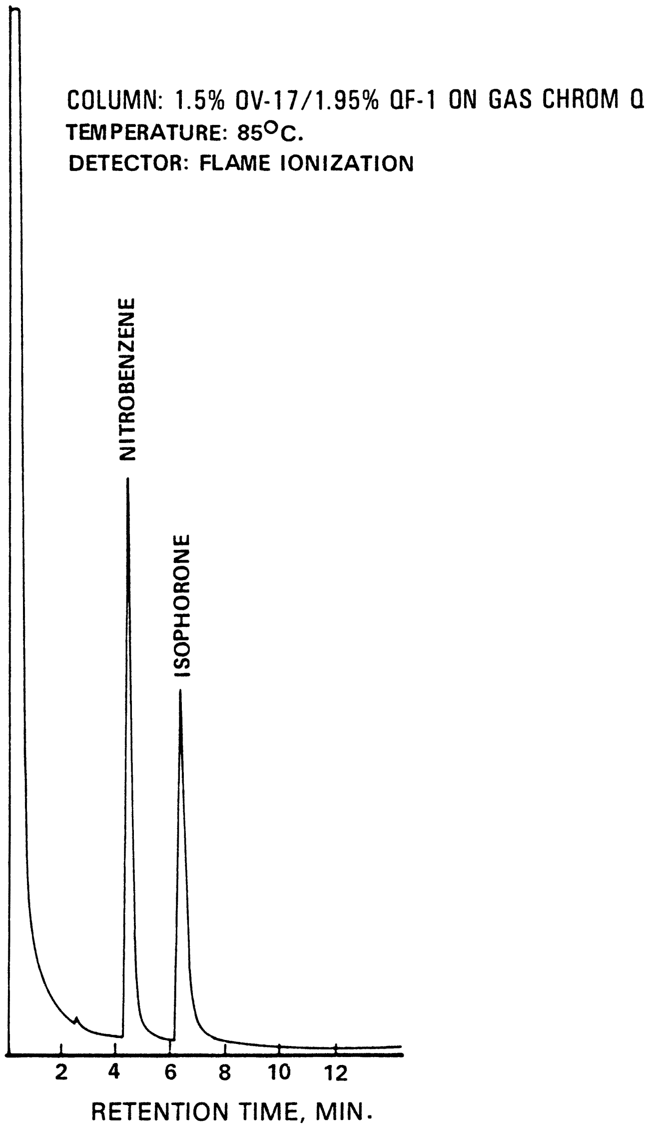

Figure 1. Gas chromatogram of nitrobenzene and isophorone.

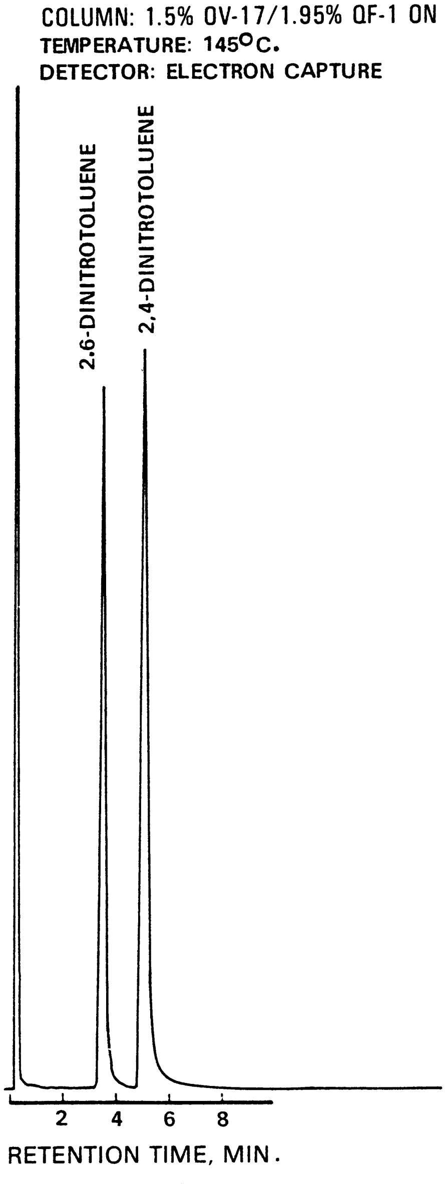

Figure 2. Gas chromatogram of dinitrotoluenes.

METHOD 610—POLYNUCLEAR AROMATIC HYDROCARBONS

1. Scope and Application

1.1 This method covers the determination of certain polynuclear aromatic hydrocarbons (PAH). The following parameters can be determined by this method:

Parameter	STORET No.	CAS No.
Acenaphthene	34205	83–32–9
Acenaphthylene	34200	208–96–8
Anthracene	34220	120–12–7
Benzo(a)anthracene	34526	56–55–3
Benzo(a)pyrene	34247	50–32–8
Benzo(b)fluoranthene	34230	205–99–2
Benzo(ghi)perylene	34521	191–24–2
Benzo(k)fluoranthene	34242	207–08–9
Chrysene	34320	218–01–9
Dibenzo(a,h)anthracene	34556	53–70–3
Fluoranthene	34376	206–44–0
Fluorene	34381	86–73–7
Indeno(1,2,3-cd)pyrene	34403	193–39–5
Naphthalene	34696	91–20–3
Phenanthrene	34461	85–01–8
Pyrene	34469	129–00–0

1.2 This is a chromatographic method applicable to the determination of the compounds listed above in municipal and industrial discharges as provided under 40 CFR 136.1. When this method is used to analyze unfamiliar samples for any or all of the compounds above, compound identifications should be supported by at least one additional qualitative technique. Method 625 provides gas chromatograph/mass spectrometer (GC/MS) conditions appropriate for the qualitative and quantitative confirmation of results for many of the parameters listed above, using the extract produced by this method.

1.3 This method provides for both high performance liquid chromatographic (HPLC) and gas chromatographic (GC) approaches for the determination of PAHs. The gas chromatographic procedure does not adequately resolve the following four pairs of compounds: Anthracene and phenanthrene; chrysene and benzo(a)anthracene; benzo(b)fluoranthene and benzo(k)fluoranthene; and dibenzo(a,h) anthracene and indeno (1,2,3-cd)pyrene. Unless the purpose for the analysis can be served by reporting the sum of an unresolved pair, the liquid chromatographic approach must be used for these compounds. The liquid chromatographic method does resolve all 16 of the PAHs listed.

1.4 The method detection limit (MDL, defined in Section 15.1)[1] for each parameter is listed in Table 1. The MDL for a specific wastewater may differ from those listed, depending upon the nature of interferences in the sample matrix.

1.5 The sample extraction and concentration steps in this method are essentially the same as in Methods 606, 608, 609, 611, and 612. Thus, a single sample may be extracted to measure the parameters included in the scope of each of these methods. When cleanup is required, the concentration levels must be high enough to permit selecting aliquots, as necessary, to apply appropriate cleanup procedures. Selection of the aliquots must be made prior to the solvent exchange steps of this method. The analyst is allowed the latitude, under Sections 12 and 13, to select chromatographic conditions appropriate for the simultaneous measurement of combinations of these parameters.

1.6 Any modification of this method, beyond those expressly permitted, shall be considered as a major modification subject to application and approval of alternate test procedures under 40 CFR 136.4 and 136.5.

1.7 This method is restricted to use by or under the supervision of analysts experienced in the use of HPLC and GC systems and in the interpretation of liquid and gas chromatograms. Each analyst must demonstrate the ability to generate acceptable results with this method using the procedure described in Section 8.2.

2. Summary of Method

2.1 A measured volume of sample, approximately 1–L, is extracted with methylene chloride using a separatory funnel. The methylene chloride extract is dried and concentrated to a volume of 10 mL or less. The extract is then separated by HPLC or GC. Ultraviolet (UV) and fluorescence detectors are used with HPLC to identify and measure the PAHs. A flame ionization detector is used with GC.[2]

2.2 The method provides a silica gel column cleanup procedure to aid in the elimination of interferences that may be encountered.

3. Interferences

3.1 Method interferences may be caused by contaminants in solvents, reagents, glassware, and other sample processing hardware that lead to discrete artifacts and/or elevated baselines in the chromatograms. All of these materials must be routinely demonstrated to be free from interferences under the conditions of the analysis by running laboratory reagent blanks as described in Section 8.1.3.

3.1.1 Glassware must be scrupulously cleaned.[3] Clean all glassware as soon as possible after use by rinsing with the last solvent used in it. Solvent rinsing should be followed by detergent washing with hot water, and rinses with tap water and distilled water. The glassware should then be drained dry, and heated in a muffle furnace at 400 °C for 15 to 30 min. Some thermally stable materials, such as PCBs, may not be eliminated by this treatment. Solvent rinses with acetone and pesticide quality hexane may be substituted for the muffle furnace heating. Thorough rinsing with such solvents usually eliminates PCB interference. Volumetric ware should not be heated in a muffle furnace. After drying and cooling, glassware should be sealed and stored in a clean environment to prevent any accumulation of dust or other contaminants. Store inverted or capped with aluminum foil.

3.1.2 The use of high purity reagents and solvents helps to minimize interference problems. Purification of solvents by distillation in all-glass systems may be required.

3.2 Matrix interferences may be caused by contaminants that are co-extracted from the sample. The extent of matrix interferences will vary considerably from source to source, depending upon the nature and diversity of the industrial complex or municipality being sampled. The cleanup procedure in Section 11 can be used to overcome many of these interferences, but unique samples may require additional cleanup approaches to achieve the MDL listed in Table 1.

3.3 The extent of interferences that may be encountered using liquid chromatographic techniques has not been fully assessed. Although the HPLC conditions described allow for a unique resolution of the specific PAH compounds covered by this method, other PAH compounds may interfere.

4. Safety

4.1 The toxicity or carcinogenicity of each reagent used in this method have not been precisely defined; however, each chemical compound should be treated as a potential health hazard. From this viewpoint, exposure to these chemicals must be reduced to the lowest possible level by whatever means available. The laboratory is responsible for maintaining a current awareness file of OSHA regulations regarding the safe handling of the chemicals specified in this method. A reference file of material data handling sheets should also be made available to all personnel involved in the chemical analysis. Additional references to laboratory safety are available and have been identified[4-6] for the information of the analyst.

4.2 The following parameters covered by this method have been tentatively classified as known or suspected, human or mammalian carcinogens: benzo(a)anthracene, benzo(a)pyrene, and dibenzo(a,h)-anthracene. Primary standards of these toxic compounds should be prepared in a hood. A NIOSH/MESA approved toxic gas respirator should be worn when the analyst handles high concentrations of these toxic compounds.

5. Apparatus and Materials

5.1 Sampling equipment, for discrete or composite sampling.

5.1.1 Grab sample bottle—1–L or 1-qt, amber glass, fitted with a screw cap lined with Teflon. Foil may be substituted for Teflon if the sample is not corrosive. If amber bottles are not available, protect samples from light. The bottle and cap liner must be washed, rinsed with acetone or methylene chloride, and dried before use to minimize contamination.

5.1.2 Automatic sampler (optional)—The sampler must incorporate glass sample containers for the collection of a minimum of 250 mL of sample. Sample containers must be kept refrigerated at 4°C and protected from light during compositing. If the sampler uses a peristaltic pump, a minimum length of compressible silicone rubber tubing may be used. Before use, however, the compressible tubing should be thoroughly rinsed with methanol, followed by repeated rinsings with distilled water to minimize the potential for contamination of the sample. An integrating flow meter is required to collect flow proportional composites.

5.2 Glassware (All specifications are suggested. Catalog numbers are included for illustration only.):

5.2.1 Separatory funnel—2–L, with Teflon stopcock.

5.2.2 Drying column—Chromatographic column, approximately 400 mm long × 19 mm ID, with coarse frit filter disc.

5.2.3 Concentrator tube, Kuderna-Danish—10-mL, graduated (Kontes K–570050–1025 or equivalent). Calibration must be checked at the volumes employed in the test. Ground glass stopper is used to prevent evaporation of extracts.

5.2.4 Evaporative flask, Kuderna-Danish—500-mL (Kontes K–570001–0500 or equivalent). Attach to concentrator tube with springs.

5.2.5 Snyder column, Kuderna-Danish—Three-ball macro (Kontes K–503000–0121 or equivalent).

5.2.6 Snyder column, Kuderna-Danish—Two-ball micro (Kontes K–569001–0219 or equivalent).

5.2.7 Vials—10 to 15-mL, amber glass, with Teflon-lined screw cap.

5.2.8 Chromatographic column—250 mm long × 10 mm ID, with coarse frit filter disc at bottom and Teflon stopcock.

5.3 Boiling chips—Approximately 10/40 mesh. Heat to 400 °C for 30 min or Soxhlet extract with methylene chloride.

5.4 Water bath—Heated, with concentric ring cover, capable of temperature control (±2 °C). The bath should be used in a hood.

5.5 Balance—Analytical, capable of accurately weighing 0.0001 g.

5.6 High performance liquid chromatograph (HPLC)—An analytical system complete with column supplies, high pressure syringes, detectors, and compatible strip-chart recorder. A data system is recommended for measuring peak areas and retention times.

5.6.1 Gradient pumping system—Constant flow.

5.6.2 Reverse phase column—HC-ODS Sil-X, 5 micron particle diameter, in a 25 cm × 2.6 mm ID stainless steel column (Perkin Elmer No. 089–0716 or equivalent). This column was used to develop the method performance statements in Section 15. Guidelines for the use of alternate column packings are provided in Section 12.2.

5.6.3 Detectors—Fluorescence and/or UV detectors. The fluorescence detector is used for excitation at 280 nm and emission greater than 389 nm cutoff (Corning 3–75 or equivalent). Fluorometers should have dispersive optics for excitation and can utilize either filter or dispersive optics at the emission detector. The UV detector is used at 254 nm and should be coupled to the fluorescence detector. These detectors were used to develop the method performance statements in Section 15. Guidelines for the use of alternate detectors are provided in Section 12.2.

5.7 Gas chromatograph—An analytical system complete with temperature programmable gas chromatograph suitable for on-column or splitless injection and all required accessories including syringes, analytical columns, gases, detector, and strip-chart recorder. A data system is recommended for measuring peak areas.

5.7.1 Column—1.8 m long × 2 mm ID glass, packed with 3% OV–17 on Chromosorb W-AW-DCMS (100/120 mesh) or equivalent. This column was used to develop the retention time data in Table 2. Guidelines for the use of alternate column packings are provided in Section 13.3.

5.7.2 Detector—Flame ionization detector. This detector has proven effective in the analysis of wastewaters for the parameters listed in the scope (Section 1.1), excluding the four pairs of unresolved compounds listed in Section 1.3. Guidelines for the use of alternate detectors are provided in Section 13.3.

6. Reagents

6.1 Reagent water—Reagent water is defined as a water in which an interferent is not observed at the MDL of the parameters of interest.

6.2 Sodium thiosulfate—(ACS) Granular.

6.3 Cyclohexane, methanol, acetone, methylene chloride, pentane—Pesticide quality or equivalent.

6.4 Acetonitrile—HPLC quality, distilled in glass.

6.5 Sodium sulfate—(ACS) Granular, anhydrous. Purify by heating at 400 °C for 4 h in a shallow tray.

6.6 Silica gel—100/200 mesh, desiccant, Davison, grade-923 or equivalent. Before use, activate for at least 16 h at 130 °C in a shallow glass tray, loosely covered with foil.

6.7 Stock standard solutions (1.00 μg/μL)—Stock standard solutions can be prepared from pure standard materials or purchased as certified solutions.

6.7.1 Prepare stock standard solutions by accurately weighing about 0.0100 g of pure material. Dissolve the material in acetonitrile and dilute to volume in a 10-mL volumetric flask. Larger volumes can be used at the convenience of the analyst. When compound purity is assayed to be 96% or greater, the weight can be used without correction to calculate the concentration of the stock standard. Commercially prepared stock standards can be used at any concentration if they are certified by the manufacturer or by an independent source.

6.7.2 Transfer the stock standard solutions into Teflon-sealed screw-cap bottles. Store at 4 °C and protect from light. Stock standard solutions should be checked frequently for signs of degradation or evaporation, especially just prior to preparing calibration standards from them.

6.7.3 Stock standard solutions must be replaced after six months, or sooner if comparison with check standards indicates a problem.

6.8 Quality control check sample concentrate—See Section 8.2.1.

7. Calibration

7.1 Establish liquid or gas chromatographic operating conditions equivalent to those given in Table 1 or 2. The chromatographic system can be calibrated using the external standard technique (Section 7.2) or the internal standard technique (Section 7.3).

7.2 External standard calibration procedure:

7.2.1 Prepare calibration standards at a minimum of three concentration levels for each parameter of interest by adding volumes of one or more stock standards to a volumetric flask and diluting to volume with acetonitrile. One of the external standards should be at a concentration near, but above, the MDL (Table 1) and the other concentrations should correspond to the expected range of concentrations found in real samples or should define the working range of the detector.

7.2.2 Using injections of 5 to 25 μL for HPLC and 2 to 5 μL for GC, analyze each calibration standard according to Section 12 or 13, as appropriate. Tabulate peak height or area responses against the mass injected. The results can be used to prepare a calibration curve for each compound. Alternatively, if the ratio of response to amount injected (calibration factor) is a constant over the working range (<10% relative standard deviation, RSD), linearity through the origin can be assumed and the average ratio or calibration factor can be used in place of a calibration curve.

7.3 Internal standard calibration procedure—To use this approach, the analyst must select one or more internal standards that are similar in analytical behavior to the compounds of interest. The analyst must further demonstrate that the measurement of the internal standard is not affected by method or matrix interferences. Because of these limitations, no internal standard can be suggested that is applicable to all samples.

7.3.1 Prepare calibration standards at a minimum of three concentration levels for each parameter of interest by adding volumes of one or more stock standards to a volumetric flask. To each calibration standard, add a known constant amount of one or more internal standards, and dilute to volume with acetonitrile. One of the standards should be at a concentration near, but above, the MDL and the other concentrations should correspond to the expected range of concentrations found in real samples or should define the working range of the detector.

7.3.2 Using injections of 5 to 25 µL for HPLC and 2 to 5 µL for GC, analyze each calibration standard according to Section 12 or 13, as appropriate. Tabulate peak height or area responses against concentration for each compound and internal standard. Calculate response factors (RF) for each compound using Equation 1.

$$RF = \frac{(A_s)(C_{is})}{(A_{is})(C_s)}$$

Equation 1

where:

A_s=Response for the parameter to be measured.

A_{is}=Response for the internal standard.

C_{is}=Concentration of the internal standard (µg/L).

C_s=Concentration of the parameter to be measured (µg/L).

If the RF value over the working range is a constant (<10% RSD), the RF can be assumed to be invariant and the average RF can be used for calculations. Alternatively, the results can be used to plot a calibration curve of response ratios, A_s/A_{is}, vs. RF.

7.4 The working calibration curve, calibration factor, or RF must be verified on each working day by the measurement of one or more calibration standards. If the response for any parameter varies from the predicted response by more than ±15%, the test must be repeated using a fresh calibration standard. Alternatively, a new calibration curve must be prepared for that compound.

7.5 Before using any cleanup procedure, the analyst must process a series of calibration standards through the procedure to validate elution patterns and the absence of interferences from the reagents.

8. Quality Control

8.1 Each laboratory that uses this method is required to operate a formal quality control program. The minimum requirements of this program consist of an initial demonstration of laboratory capability and an ongoing analysis of spiked samples to evaluate and document data quality. The laboratory must maintain records to document the quality of data that is generated. Ongoing data quality checks are compared with established performance criteria to determine if the results of analyses meet the performance characteristics of the method. When results of sample spikes indicate atypical method performance, a quality control check standard must be analyzed to confirm that the measurements were performed in an in-control mode of operation.

8.1.1 The analyst must make an initial, one-time, demonstration of the ability to generate acceptable accuracy and precision with this method. This ability is established as described in Section 8.2.

8.1.2 In recognition of advances that are occurring in chromatography, the analyst is permitted certain options (detailed in Sections 10.4, 11.1, 12.2, and 13.3) to improve the separations or lower the cost of measurements. Each time such a modification is made to the method, the analyst is required to repeat the procedure in Section 8.2.

8.1.3 Before processing any samples the analyst must analyze a reagent water blank to demonstrate that interferences from the analytical system and glassware are under control. Each time a set of samples is extracted or reagents are changed a reagent water blank must be processed as a safeguard against laboratory contamination.

8.1.4 The laboratory must, on an ongoing basis, spike and analyze a minimum of 10% of all samples to monitor and evaluate laboratory data quality. This procedure is described in Section 8.3.

8.1.5 The laboratory must, on an ongoing basis, demonstrate through the analyses of quality control check standards that the operation of the measurement system is in control. This procedure is described in Section 8.4. The frequency of the check standard analyses is equivalent to 10% of all samples analyzed but may be reduced if spike recoveries from samples (Section 8.3) meet all specified quality control criteria.

8.1.6 The laboratory must maintain performance records to document the quality of data that is generated. This procedure is described in Section 8.5.

8.2 To establish the ability to generate acceptable accuracy and precision, the analyst must perform the following operations.

8.2.1 A quality control (QC) check sample concentrate is required containing each parameter of interest at the following concentrations in acetonitrile: 100 µg/mL of any of the six early-eluting PAHs (naphthalene, acenaphthylene, acenaphthene, fluorene, phenanthrene, and anthracene); 5 μg/mL of benzo(k)fluoranthene; and 10 μg/mL of any of the other PAHs. The QC check sample concentrate must be obtained from the U.S. Environmental Protection Agency, Environmental Monitoring and Support Laboratory in Cincinnati, Ohio, if available. If not available from that source, the QC check sample concentrate must be obtained from another external source. If not available from either source above, the QC check sample concentrate must be prepared by the laboratory using stock standards prepared independently from those used for calibration.

8.2.2 Using a pipet, prepare QC check samples at the test concentrations shown in Table 3 by adding 1.00 mL of QC check sample concentrate to each of four 1–L aliquots of reagent water.

8.2.3 Analyze the well-mixed QC check samples according to the method beginning in Section 10.

8.2.4 Calculate the average recovery ($\bar{X}$) in μg/L, and the standard deviation of the recovery (s) in μg/L, for each parameter using the four results.

8.2.5 For each parameter compare s and $\bar{X}$ with the corresponding acceptance criteria for precision and accuracy, respectively, found in Table 3. If s and $\bar{X}$ for all parameters of interest meet the acceptance criteria, the system performance is acceptable and analysis of actual samples can begin. If any individual s exceeds the precision limit or any individual $\bar{X}$ falls outside the range for accuracy, the system performance is unacceptable for that parameter.

NOTE: The large number of parameters in Table 3 present a substantial probability that one or more will fail at least one of the acceptance criteria when all parameters are analyzed.

8.2.6 When one or more of the parameters tested fail at least one of the acceptance criteria, the analyst must proceed according to Section 8.2.6.1 or 8.2.6.2.

8.2.6.1 Locate and correct the source of the problem and repeat the test for all parameters of interest beginning with Section 8.2.2.

8.2.6.2 Beginning with Section 8.2.2, repeat the test only for those parameters that failed to meet criteria. Repeated failure, however, will confirm a general problem with the measurement system. If this occurs, locate and correct the source of the problem and repeat the test for all compounds of interest beginning with Section 8.2.2.

8.3 The laboratory must, on an ongoing basis, spike at least 10% of the samples from each sample site being monitored to assess accuracy. For laboratories analyzing one to ten samples per month, at least one spiked sample per month is required.

8.3.1 The concentration of the spike in the sample should be determined as follows:

8.3.1.1 If, as in compliance monitoring, the concentration of a specific parameter in the sample is being checked against a regulatory concentration limit, the spike should be at that limit or 1 to 5 times higher than the background concentration determined in Section 8.3.2, whichever concentration would be larger.

8.3.1.2 If the concentration of a specific parameter in the sample is not being checked against a limit specific to that parameter, the spike should be at the test concentration in Section 8.2.2 or 1 to 5 times higher than the background concentration determined in Section 8.3.2, whichever concentration would be larger.

8.3.1.3 If it is impractical to determine background levels before spiking (e.g., maximum holding times will be exceeded), the spike concentration should be (1) the regulatory concentration limit, if any; or, if none, (2) the larger of either 5 times higher than the expected background concentration or the test concentration in Section 8.2.2.

8.3.2 Analyze one sample aliquot to determine the background concentration (B) of each parameter. If necessary, prepare a new QC check sample concentrate (Section 8.2.1) appropriate for the background concentrations in the sample. Spike a second sample aliquot with 1.0 mL of the QC check sample concentrate and analyze it to determine the concentration after spiking (A) of each parameter. Calculate each percent recovery (P) as $100(A-B)\%/T$, where T is the known true value of the spike.

8.3.3 Compare the percent recovery (P) for each parameter with the corresponding QC acceptance criteria found in Table 3. These acceptance criteria were calculated to include an allowance for error in measurement of both the background and spike concentrations, assuming a spike to background ratio of 5:1. This error will be accounted for to the extent that the analyst's spike to background ratio approaches 5:1.[7] If spiking was performed at a concentration lower than the test concentration in Section 8.2.2, the analyst must use either the QC acceptance criteria in Table 3, or optional QC acceptance criteria calculated for the specific spike concentration. To calculate optional acceptance criteria for the recovery of a parameter: (1) Calculate accuracy (X') using the equation in Table 4, substituting the spike concentration (T) for C; (2) calculate overall precision (S') using the equation in Table 4, substituting X' for $\bar{X}$; (3) calculate the range for recovery at the spike concentration as $(100\,X'/T) \pm 2.44(100\,S'/T)\%$.[7]

8.3.4 If any individual P falls outside the designated range for recovery, that parameter has failed the acceptance criteria. A check standard containing each parameter that failed the critiera must be analyzed as described in Section 8.4.

8.4 If any parameter fails the acceptance criteria for recovery in Section 8.3, a QC check standard containing each parameter that failed must be prepared and analyzed.

NOTE: The frequency for the required analysis of a QC check standard will depend upon the number of parameters being simultaneously tested, the complexity of the sample matrix, and the performance of the laboratory. If the entire list of parameters in Table 3 must be measured in the sample in Section 8.3, the probability that the analysis of a QC check standard will be required is high. In this case the QC check standard should be routinely analyzed with the spike sample.

8.4.1 Prepare the QC check standard by adding 1.0 mL of QC check sample concentrate (Section 8.2.1 or 8.3.2) to 1 L of reagent water. The QC check standard needs only to contain the parameters that failed criteria in the test in Section 8.3.

8.4.2 Analyze the QC check standard to determine the concentration measured (A) of each parameter. Calculate each percent recovery (P_s) as 100 (A/T)%, where T is the true value of the standard concentration.

8.4.3 Compare the percent recovery (P_s) for each parameter with the corresponding QC acceptance criteria found in Table 3. Only parameters that failed the test in Section 8.3 need to be compared with these criteria. If the recovery of any such parameter falls outside the designated range, the laboratory performance for that parameter is judged to be out of control, and the problem must be immediately identified and corrected. The analytical result for that parameter in the unspiked sample is suspect and may not be reported for regulatory compliance purposes.

8.5 As part of the QC program for the laboratory, method accuracy for wastewater samples must be assessed and records must be maintained. After the analysis of five spiked wastewater samples as in Section 8.3, calculate the average percent recovery ($\bar{P}$) and the standard deviation of the percent recovery (s_p). Express the accuracy assessment as a percent recovery interval from $\bar{P}-2s_p$ to $\bar{P}+2s_p$. If $\bar{P}$=90% and s_p=10%, for example, the accuracy interval is expressed as 70–110%. Update the accuracy assessment for each parameter on a regular basis (e.g. after each five to ten new accuracy measurements).

8.6 It is recommended that the laboratory adopt additional quality assurance practices for use with this method. The specific practices that are most productive depend upon the needs of the laboratory and the nature of the samples. Field duplicates may be analyzed to assess the precision of the environmental measurements. When doubt exists over the identification of a peak on the chromatogram, confirmatory techniques such as gas chromatography with a dissimilar column, specific element detector, or mass spectrometer must be used. Whenever possible, the laboratory should analyze standard reference materials and participate in relevant performance evaluation studies.

9. Sample Collection, Preservation, and Handling

9.1 Grab samples must be collected in glass containers. Conventional sampling practices[8] should be followed, except that the bottle must not be prerinsed with sample before collection. Composite samples should be collected in refrigerated glass containers in accordance with the requirements of the program. Automatic sampling equipment must be as free as possible of Tygon tubing and other potential sources of contamination.

9.2 All samples must be iced or refrigerated at 4 °C from the time of collection until extraction. PAHs are known to be light sensitive; therefore, samples, extracts, and standards should be stored in amber or foil-wrapped bottles in order to minimize photolytic decomposition. Fill the sample bottles and, if residual chlorine is present, add 80 mg of sodium thiosulfate per liter of sample and mix well. EPA Methods 330.4 and 330.5 may be used for measurement of residual chlorine.[9] Field test kits are available for this purpose.

9.3 All samples must be extracted within 7 days of collection and completely analyzed within 40 days of extraction.[2]

10. Sample Extraction

10.1 Mark the water meniscus on the side of the sample bottle for later determination of sample volume. Pour the entire sample into a 2–L separatory funnel.

10.2 Add 60 mL of methylene chloride to the sample bottle, seal, and shake 30 s to rinse the inner surface. Transfer the solvent to the separatory funnel and extract the sample by shaking the funnel for 2 min. with periodic venting to release excess pressure. Allow the organic layer to separate from the water phase for a minimum of 10 min. If the emulsion interface between layers is more than one-third the volume of the solvent layer, the analyst must employ mechanical techniques to complete the phase separation. The optimum technique depends upon the sample, but may include stirring, filtration of the emulsion through glass wool, centrifugation, or other physical methods. Collect the methylene chloride extract in a 250–mL Erlenmeyer flask.

10.3 Add a second 60-mL volume of methylene chloride to the sample bottle and repeat the extraction procedure a second time, combining the extracts in the Erlenmeyer flask. Perform a third extraction in the same manner.

10.4 Assemble a Kuderna-Danish (K-D) concentrator by attaching a 10-mL concentrator tube to a 500-mL evaporative flask. Other concentration devices or techniques may be used in place of the K-D concentrator if the requirements of Section 8.2 are met.

10.5 Pour the combined extract through a solvent-rinsed drying column containing about 10 cm of anhydrous sodium sulfate, and collect the extract in the K-D concentrator. Rinse the Erlenmeyer flask and column with 20 to 30 mL of methylene chloride to complete the quantitative transfer.

10.6 Add one or two clean boiling chips to the evaporative flask and attach a three-ball Snyder column. Prewet the Snyder column by adding about 1 mL of methylene chloride to the top. Place the K-D apparatus on a hot water bath (60 to 65 °C) so that the concentrator tube is partially immersed in the hot water, and the entire lower rounded surface of the flask is bathed with hot vapor. Adjust the vertical position of the apparatus and the water temperature as required to complete the concentration in 15 to 20 min. At the proper rate of distillation the balls of the column will actively chatter but the chambers will not flood with condensed solvent. When the apparent volume of liquid reaches 1 mL, remove the K-D apparatus and allow it to drain and cool for at least 10 min.

10.7 Remove the Snyder column and rinse the flask and its lower joint into the concentrator tube with 1 to 2 mL of methylene chloride. A 5-mL syringe is recommended for this operation. Stopper the concentrator tube and store refrigerated if further processing will not be performed immediately. If the extract will be stored longer than two days, it should be transferred to a Teflon-sealed screw-cap vial and protected from light. If the sample extract requires no further cleanup, proceed with gas or liquid chromatographic analysis (Section 12 or 13). If the sample requires further cleanup, proceed to Section 11.

10.8 Determine the original sample volume by refilling the sample bottle to the mark and transferring the liquid to a 1000-mL graduated cylinder. Record the sample volume to the nearest 5 mL.

11. Cleanup and Separation

11.1 Cleanup procedures may not be necessary for a relatively clean sample matrix. If particular circumstances demand the use of a cleanup procedure, the analyst may use the procedure below or any other appropriate procedure. However, the analyst first must demonstrate that the requirements of Section 8.2 can be met using the methods as revised to incorporate the cleanup procedure.

11.2 Before the silica gel cleanup technique can be utilized, the extract solvent must be exchanged to cyclohexane. Add 1 to 10 mL of the sample extract (in methylene chloride) and a boiling chip to a clean K-D concentrator tube. Add 4 mL of cyclohexane and attach a two-ball micro-Snyder column. Prewet the column by adding 0.5 mL of methylene chloride to the top. Place the micro-K-D apparatus on a boiling (100 °C) water bath so that the concentrator tube is partially immersed in the hot water. Adjust the vertical position of the apparatus and the water temperature as required to complete concentration in 5 to 10 min. At the proper rate of distillation the balls of the column will actively chatter but the chambers will not flood. When the apparent volume of the liquid reaches 0.5 mL, remove the K-D apparatus and allow it to drain and cool for at least 10 min. Remove the micro-Snyder column and rinse its lower joint into the concentrator tube with a minimum amount of cyclohexane. Adjust the extract volume to about 2 mL.

11.3 Silica gel column cleanup for PAHs:

11.3.1 Prepare a slurry of 10 g of activiated silica gel in methylene chloride and place this into a 10-mm ID chromatographic column. Tap the column to settle the silica gel and elute the methylene chloride. Add 1 to 2 cm of anhydrous sodium sulfate to the top of the silica gel.

11.3.2 Preelute the column with 40 mL of pentane. The rate for all elutions should be about 2 mL/min. Discard the eluate and just prior to exposure of the sodium sulfate layer to the air, transfer the 2-mL cyclohexane sample extract onto the column using an additional 2 mL cyclohexane to complete the transfer. Just prior to exposure of the sodium sulfate layer to the air, add 25 mL of pentane and continue the elution of the column. Discard this pentane eluate.

11.3.3 Next, elute the column with 25 mL of methylene chloride/pentane (4+6)(V/V) into a 500-mL K-D flask equipped with a 10-mL concentrator tube. Concentrate the collected fraction to less than 10 mL as in Section 10.6. When the apparatus is cool, remove the Snyder column and rinse the flask and its lower joint with pentane. Proceed with HPLC or GC analysis.

12. High Performance Liquid Chromatography

12.1 To the extract in the concentrator tube, add 4 mL of acetonitrile and a new boiling chip, then attach a two-ball micro-Snyder column. Concentrate the solvent as in Section 10.6, except set the water bath at 95 to 100 °C. When the apparatus is cool, remove the micro-Snyder column and rinse its lower joint into the concentrator tube with about 0.2 mL of acetonitrile. Adjust the extract volume to 1.0 mL.

12.2 Table 1 summarizes the recommended operating conditions for the HPLC. Included in this table are retention times, capacity factors, and MDL that can be achieved under these conditions. The UV detector is recommended for the determination of naphthalene, acenaphthylene, acenapthene, and fluorene and the fluorescence detector is recommended for the remaining PAHs. Examples of the separations achieved by this HPLC column are shown in Figures 1 and 2. Other HPLC columns, chromatographic conditions, or detectors may be used if the requirements of Section 8.2 are met.

12.3 Calibrate the system daily as described in Section 7.

12.4 If the internal standard calibration procedure is being used, the internal standard must be added to the sample extract and mixed thoroughly immediately before injection into the instrument.

12.5 Inject 5 to 25 μL of the sample extract or standard into the HPLC using a high pressure syringe or a constant volume sample injection loop. Record the volume injected to the nearest 0.1 μL, and the resulting peak size in area or peak height units. Re-equilibrate the HPLC column at the initial gradient conditions for at least 10 min between injections.

12.6 Identify the parameters in the sample by comparing the retention time of the peaks in the sample chromatogram with those of the peaks in standard chromatograms. The width of the retention time window used to make identifications should be based upon measurements of actual retention time variations of standards over the course of a day. Three times the standard deviation of a retention time for a compound can be used to calculate a suggested window size; however, the experience of the analyst should weigh heavily in the interpretation of chromatograms.

12.7 If the response for a peak exceeds the working range of the system, dilute the extract with acetonitrile and reanalyze.

12.8 If the measurement of the peak response is prevented by the presence of interferences, further cleanup is required.

13. Gas Chromatography

13.1 The packed column GC procedure will not resolve certain isomeric pairs as indicated in Section 1.3 and Table 2. The liquid chromatographic procedure (Section 12) must be used for these parameters.

13.2 To achieve maximum sensitivity with this method, the extract must be concentrated to 1.0 mL. Add a clean boiling chip to the methylene chloride extract in the concentrator tube. Attach a two-ball micro-Snyder column. Prewet the micro-Snyder column by adding about 0.5 mL of methylene chloride to the top. Place the micro-K-D apparatus on a hot water bath (60 to 65 °C) so that the concentrator tube is partially immersed in the hot water. Adjust the vertical position of the apparatus and the water temperature as required to complete the concentration in 5 to 10 min. At the proper rate of distillation the balls will actively chatter but the chambers will not flood. When the apparent volume of liquid reaches 0.5 mL, remove the K-D apparatus and allow it to drain and cool for at least 10 min. Remove the micro-Snyder column and rinse its lower joint into the concentrator tube with a minimum amount of methylene chloride. Adjust the final volume to 1.0 mL and stopper the concentrator tube.

13.3 Table 2 summarizes the recommended operating conditions for the gas chromatograph. Included in this table are retention times that were obtained under these conditions. An example of the separations achieved by this column is shown in Figure 3. Other packed or capillary (open-tubular) columns, chromatographic conditions, or detectors may be used if the requirements of Section 8.2 are met.

13.4 Calibrate the gas chromatographic system daily as described in Section 7.

13.5 If the internal standard calibration procedure is being used, the internal standard must be added to the sample extract and mixed thoroughly immediately before injection into the gas chromatograph.

13.6 Inject 2 to 5 μL of the sample extract or standard into the gas chromatograph using the solvent-flush technique.[10] Smaller (1.0 μL) volumes may be injected if automatic devices are employed. Record the volume injected to the nearest 0.05 μL, and the resulting peak size in area or peak height units.

13.7 Identify the parameters in the sample by comparing the retention times of the peaks in the sample chromatogram with those of the peaks in standard chromatograms. The width of the retention time window used to make identifications should be based upon measurements of actual retention time variations of standards over the course of a day. Three times the standard deviation of a retention time for a compound can be used to calculate a suggested window size; however, the experience of the analyst should weigh heavily in the interpretation of chromatograms.

13.8 If the response for a peak exceeds the working range of the system, dilute the extract and reanalyze.

13.9 If the measurement of the peak response is prevented by the presence of interferences, further cleanup is required.

14. Calculations

14.1 Determine the concentration of individual compounds in the sample.

14.1.1 If the external standard calibration procedure is used, calculate the amount of material injected from the peak response using the calibration curve or calibration factor determined in Section 7.2.2. The concentration in the sample can be calculated from Equation 2.

$$\text{Concentration } (\mu g/L) = \frac{(A)(V_t)}{(V_i)(V_s)}$$

Equation 2

where:

A=Amount of material injected (ng).
V_i=Volume of extract injected (μL).
V_t=Volume of total extract (μL).
V_s=Volume of water extracted (mL).

13.1.2 If the internal standard calibration procedure is used, calculate the concentration in the sample using the response factor (RF) determined in Section 7.3.2 and Equation 3.

$$\text{Concentration } (\mu g/L) = \frac{(A_s)(I_s)}{(A_{is})(RF)(V_o)}$$

Equation 3

where:

A_s=Response for the parameter to be measured.
A_{is}=Response for the internal standard.
I_s=Amount of internal standard added to each extract (μg).
V_o=Volume of water extracted (L).

14.2 Report results in μg/L without correction for recovery data. All QC data obtained should be reported with the sample results.

15. Method Performance

15.1 The method detection limit (MDL) is defined as the minimum concentration of a substance that can be measured and reported with 99% confidence that the value is above zero.[1] The MDL concentrations listed in Table 1 were obtained using reagent water.[11] Similar results were achieved using representative wastewaters. MDL for the GC approach were not determined. The MDL actually achieved in a given analysis will vary depending on instrument sensitivity and matrix effects.

15.2 This method has been tested for linearity of spike recovery from reagent water and has been demonstrated to be applicable over the concentration range from 8 × MDL to 800 × MDL[11] with the following exception: benzo(ghi)perylene recovery at 80 × and 800 × MDL were low (35% and 45%, respectively).

15.3 This method was tested by 16 laboratories using reagent water, drinking water, surface water, and three industrial wastewaters spiked at six concentrations over the range 0.1 to 425 μg/L.[12] Single operator precision, overall precision, and method accuracy were found to be directly related to the concentration of the parameter and essentially independent of the sample matrix. Linear equations to describe these relationships are presented in Table 4.

References

1. 40 CFR part 136, appendix B.

2. ‘‘Determination of Polynuclear Aromatic Hydrocarbons in Industrial and Municipal Wastewaters,’’ EPA 600/4–82–025, National Technical Information Service, PB82–258799, Springfield, Virginia 22161, June 1982.

3. ASTM Annual Book of Standards, Part 31, D3694–78. ‘‘Standard Practices for Preparation of Sample Containers and for Preservation of Organic Constituents,’’ American Society for Testing and Materials, Philadelphia.

4. ‘‘Carcinogens—Working With Carcinogens,’’ Department of Health, Education, and Welfare, Public Health Service, Center for Disease Control, National Institute for Occupational Safety and Health, Publication No. 77–206, August 1977.

5. ‘‘OSHA Safety and Health Standards, General Industry,’’ (29 CFR part 1910), Occupational Safety and Health Administration, OSHA 2206 (Revised, January 1976).

6. ‘‘Safety in Academic Chemistry Laboratories,’’ American Chemical Society Publication, Committee on Chemical Safety, 3rd Edition, 1979.

7. Provost, L.P., and Elder, R.S. ‘‘Interpretation of Percent Recovery Data,’’ *American Laboratory, 15,* 58–63 (1983). (The value 2.44 used in the equation in Section 8.3.3 is two times the value 1.22 derived in this report.)

8. ASTM Annual Book of Standards, Part 31, D3370–76. ‘‘Standard Practices for Sampling Water,’’ American Society for Testing and Materials, Philadelphia.

9. ‘‘Methods 330.4 (Titrimetric, DPD-FAS) and 330.5 (Spectrophotometric, DPD) for Chlorine, Total Residual,’’ Methods for Chemical Analysis of Water and Wastes, EPA–600/4–79–020, U.S. Environmental Protection Agency, Environmental Monitoring and Support Laboratory, Cincinnati, Ohio 45268, March 1979.

10. Burke, J.A. ‘‘Gas Chromatography for Pesticide Residue Analysis; Some Practical Aspects,’’ *Journal of the Association of Official Analytical Chemists, 48,* 1037 (1965).

11. Cole, T., Riggin, R., and Glaser, J. ‘‘Evaluation of Method Detection Limits and Analytical Curve for EPA Method 610—PNAs,’’ International Symposium on Polynuclear Aromatic Hydrocarbons, 5th, Battelle's Columbus Laboratories, Columbus, Ohio (1980).

12. ‘‘EPA Method Study 20, Method 610 (PNA's),’’ EPA 600/4–84–063, National Technical Information Service, PB84–211614, Springfield, Virginia 22161, June 1984.

TABLE 1—HIGH PERFORMANCE LIQUID CHROMATOGRAPHY CONDITIONS AND METHOD DETECTION LIMITS

Parameter	Retention time (min)	Column capacity factor (k′)	Method detection limit (µg/L) [a]
Naphthalene	16.6	12.2	1.8
Acenaphthylene	18.5	13.7	2.3
Acenaphthene	20.5	15.2	1.8
Fluorene	21.2	15.8	0.21
Phenanthrene	22.1	16.6	0.64
Anthracene	23.4	17.6	0.66
Fluoranthene	24.5	18.5	0.21
Pyrene	25.4	19.1	0.27
Benzo(a)anthracene	28.5	21.6	0.013
Chrysene	29.3	22.2	0.15
Benzo(b)fluoranthene	31.6	24.0	0.018
Benzo(k)fluoranthene	32.9	25.1	0.017
Benzo(a)pyrene	33.9	25.9	0.023
Dibenzo(a,h)anthracene	35.7	27.4	0.030
Benzo(ghi)perylene	36.3	27.8	0.076
Indeno(1,2,3-cd)pyrene	37.4	28.7	0.043

AAAHPLC column conditions: Reverse phase HC-ODS Sil-X, 5 micron particle size, in a 25 cm × 2.6 mm ID stainless steel column. Isocratic elution for 5 min. using acetonitrile/water (4+6), then linear gradient elution to 100% acetonitrile over 25 min. at 0.5 mL/min flow rate. If columns having other internal diameters are used, the flow rate should be adjusted to maintain a linear velocity of 2 mm/sec.

[a] The MDL for naphthalene, acenaphthylene, acenaphthene, and fluorene were determined using a UV detector. All others were determined using a fluorescence detector.

TABLE 2—GAS CHROMATOGRAPHIC CONDITIONS AND RETENTION TIMES

Parameter	Retention time (min)
Naphthalene	4.5
Acenaphthylene	10.4
Acenaphthene	10.8
Fluorene	12.6
Phenanthrene	15.9
Anthracene	15.9
Fluoranthene	19.8
Pyrene	20.6
Benzo(a)anthracene	24.7
Chrysene	24.7
Benzo(b)fluoranthene	28.0
Benzo(k)fluoranthene	28.0
Benzo(a)pyrene	29.4
Dibenzo(a,h)anthracene	36.2
Indeno(1,2,3-cd)pyrene	36.2
Benzo(ghi)perylene	38.6

GC Column conditions: Chromosorb W-AW-DCMS (100/120 mesh) coated with 3% OV–17 packed in a 1.8 × 2 mm ID glass column with nitrogen carrier gas at 40 mL/min. flow rate. Column temperature was held at 100 °C for 4 min., then programmed at 8 °C/min. to a final hold at 280 °C.

TABLE 3—QC ACCEPTANCE CRITERIA—METHOD 610

Parameter	Test conc. (µg/L)	Limit for s (µg/L)	Range for $\bar{X}$ (µg/L)	Range for P, P_s (%)
Acenaphthene	100	40.3	D–105.7	D–124
Acenaphthylene	100	45.1	22.1–112.1	D–139
Anthracene	100	28.7	11.2–112.3	D–126
Benzo(a)anthracene	10	4.0	3.1–11.6	12–135
Benzo(a)pyrene	10	4.0	0.2–11.0	D–128
Benzo(b)fluor-anthene	10	3.1	1.8–13.8	6–150
Benzo(ghi)perylene	10	2.3	D–10.7	D–116
Benzo(k)fluo-ranthene	5	2.5	D–7.0	D–159
Chrysene	10	4.2	D–17.5	D–199
Dibenzo(a,h)an-thracene	10	2.0	0.3–10.0	D–110
Fluoranthene	10	3.0	2.7–11.1	14–123
Fluorene	100	43.0	D–119	D–142
Indeno(1,2,3–cd)pyrene	10	3.0	1.2–10.0	D–116
Naphthalene	100	40.7	21.5–100.0	D–122
Phenanthrene	100	37.7	8.4–133.7	D–155
Pyrene	10	3.4	1.4–12.1	D–140

s=Standard deviation of four recovery measurements, in µg/L (Section 8.2.4).
X=Average recovery for four recovery measurements, in µg/L (Section 8.2.4).
P, P_s=Percent recovery measured (Section 8.3.2, Section 8.4.2).
D=Detected; result must be greater than zero.

NOTE: These criteria are based directly upon the method performance data in Table 4. Where necessary, the limits for recovery have been broadened to assure applicability of the limits to concentrations below those used to develop Table 4.

TABLE 4—METHOD ACCURACY AND PRECISION AS FUNCTIONS OF CONCENTRATION—METHOD 610

Parameter	Accuracy, as recovery, X′ (µg/L)	Single analyst precision, s_r' (µg/L)	Overall precision, S′ (µg/L)
Acenaphthene	0.52C+0.54	$0.39\bar{X}+0.76$	$0.53\bar{X}+1.32$
Acenaphthylene	0.69C − 1.89	$0.36\bar{X}+0.29$	$0.42\bar{X}+0.52$
Anthracene	0.63C − 1.26	$0.23\bar{X}+1.16$	$0.41\bar{X}+0.45$
Benzo(a)anthracene	0.73C+0.05	$0.28\bar{X}+0.04$	$0.34\bar{X}+0.02$
Benzo(a)pyrene	0.56C+0.01	$0.38\bar{X}-0.01$	$0.53\bar{X}-0.01$
Benzo(b)fluoranthene	0.78C+0.01	$0.21\bar{X}+0.01$	$0.38\bar{X}-0.00$
Benzo(ghi)perylene	0.44C+0.30	$0.25\bar{X}+0.04$	$0.58\bar{X}+0.10$
Benzo(k)fluoranthene	0.59C+0.00	$0.44\bar{X}-0.00$	$0.69\bar{X}+0.01$
Chrysene	0.77C − 0.18	$0.32\bar{X}-0.18$	$0.66\bar{X}-0.22$
Dibenzo(a,h)anthracene	0.41C+0.11	$0.24\bar{X}+0.02$	$0.45\bar{X}+0.03$
Fluoranthene	0.68C+0.07	$0.22\bar{X}+0.06$	$0.32\bar{X}+0.03$
Fluorene	0.56C − 0.52	$0.44\bar{X}-1.12$	$0.63\bar{X}-0.65$
Indeno(1,2,3–cd)pyrene	0.54C+0.06	$0.29\bar{X}+0.02$	$0.42\bar{X}+0.01$
Naphthalene	0.57C − 0.70	$0.39\bar{X}-0.18$	$0.41\bar{X}+0.74$
Phenanthrene	0.72C − 0.95	$0.29\bar{X}+0.05$	$0.47\bar{X}-0.25$
Pyrene	0.69C − 0.12	$0.25\bar{X}+0.14$	$0.42\bar{X}-0.00$

X′=Expected recovery for one or more measurements of a sample containing a concentration of C, in µg/L.
s_r'=Expected single analyst standard deviation of measurements at an average concentration found of $\bar{X}$, in µg/L.
S′=Expected interlaboratory standard deviation of measurements at an average concentration found of $\bar{X}$, in µg/L.
C=True value for the concentration, in µg/L.
$\bar{X}$=Average recovery found for measurements of samples containing a concentration of C, in µg/L.

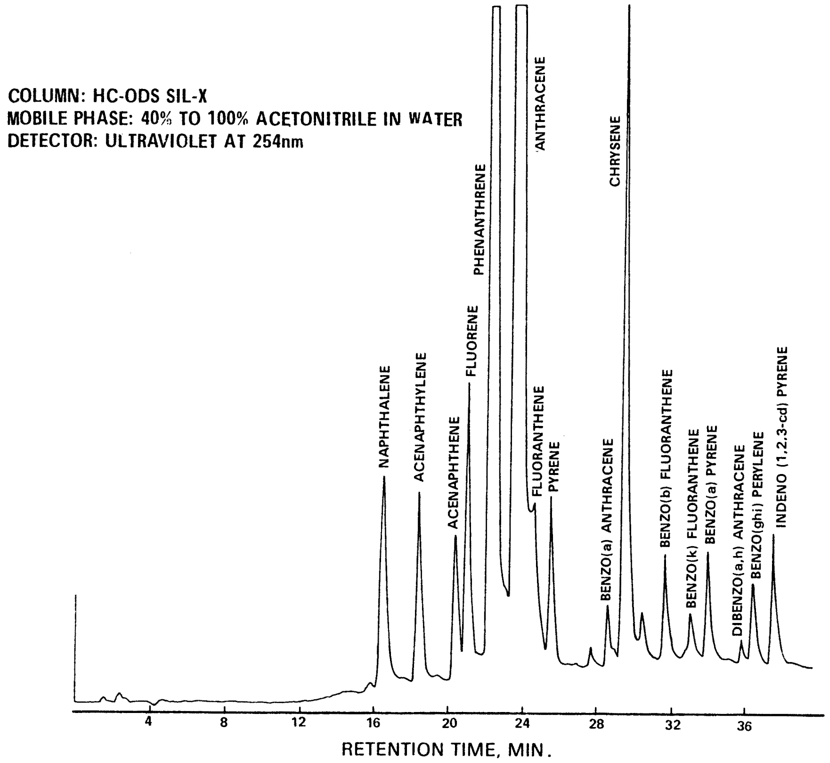

Figure 1. Liquid chromatogram of polynuclear aromatic hydrocarbons.

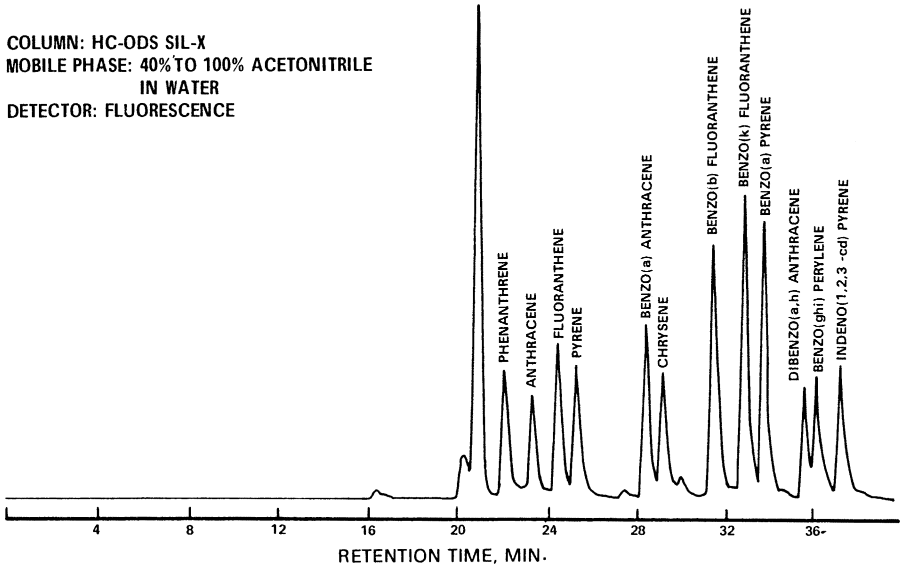

Figure 2. Liquid chromatogram of polynuclear aromatic hydrocarbons.

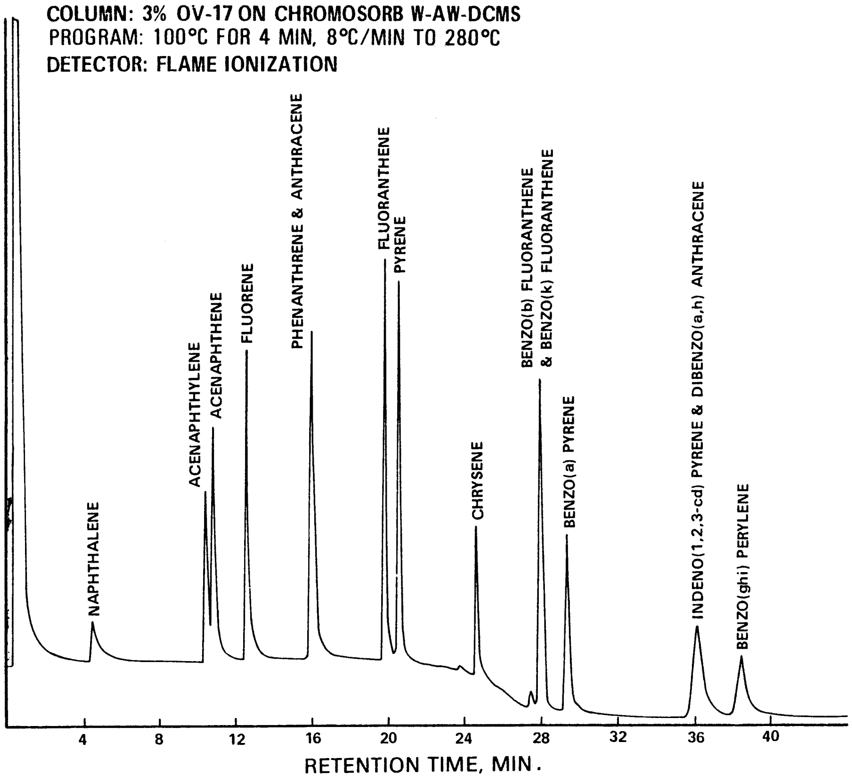

Figure 3. Gas chromatogram of polynuclear aromatic hydrocarbons.

METHOD 611—HALOETHERS

1. Scope and Application

1.1 This method covers the determination of certain haloethers. The following parameters can be determined by this method:

Parameter	STORET No.	CAS No.
Bis(2-chloroethyl) ether	34273	111–44–4
Bis(2-chloroethoxy) methane	34278	111–91–1
Bis(2-chloroisopropyl) ether	34283	108–60–1
4-Bromophenyl phenyl ether	34636	101–55–3
4-Chlorophenyl phenyl either	34641	7005–72–3

1.2 This is a gas chromatographic (GC) method applicable to the determination of the compounds listed above in municipal and industrial discharges as provided under 40 CFR 136.1. When this method is used to analyze unfamiliar samples for any or all of the compounds above, compound identifications should be supported by at least one additional qualitative technique. This method describes analytical conditions for a second gas chromatographic column that can be used to confirm measurements made with the primary column. Method 625 provides gas chromatograph/mass spectrometer (GC/MS) conditions appropriate for the qualitative and quantitative confirmation of results for all of the parameters listed above, using the extract produced by this method.

1.3 The method detection limit (MDL, defined in Section 14.1)[1] for each parameter is listed in Table 1. The MDL for a specific wastewater may differ from those listed, depending upon the nature of interferences in the sample matrix.

1.4 The sample extraction and concentration steps in this method are essentially the same as in Methods 606, 608, 609, and 612. Thus, a single sample may be extracted to measure the parameters included in the scope of each of these methods. When cleanup is required, the concentration levels must be high enough to permit selecting aliquots, as necessary, to apply appropriate cleanup procedures. The analyst is allowed the latitude, under Section 12, to select chromatographic conditions appropriate for the simultaneous measurement of combinations of these parameters.

1.5 Any modification of this method, beyond those expressly permitted, shall be considered as a major modification subject to application and approval of alternate test procedures under 40 CFR 136.4 and 136.5.

1.6 This method is restricted to use by or under the supervision of analysts experienced in the use of a gas chromatograph and in the interpretation of gas chromatograms. Each analyst must demonstrate the ability to generate acceptable results with this method using the procedure described in Section 8.2.

2. Summary of Method

2.1 A measured volume of sample, approximately 1–L, is extracted with methylene chloride using a separatory funnel. The methylene chloride extract is dried and exchanged to hexane during concentration to a volume of 10 mL or less. The extract is separated by gas chromatography and the parameters are then measured with a halide specific detector.[2]

2.2 The method provides a Florisil column cleanup procedure to aid in the elimination of interferences that may be encountered.

3. Interferences

3.1 Method interferences may be caused by contaminants in solvents, reagents, glassware, and other sample processing hardware that lead to discrete artifacts and/or elevated baselines in gas chromatograms. All of these materials must be routinely demonstrated to be free from interferences under the conditions of the analysis by running laboratory reagent blanks as described in Section 8.1.3.

3.1.1 Glassware must be scrupulously cleaned.[3] Clean all glassware as soon as possible after use by rinsing with the last solvent used in it. Solvent rinsing should be followed be detergent washing with hot water, and rinses with tap water and distilled water. The glassware should then be drained dry, and heated in a muffle furnace at 400 °C for 15 to 30 min. Some thermally stable materials, such a PCBs, may not be eliminated by this treatment. Solvent rinses with acetone and pesticide quality hexane may be substituted for the muffle furnace heating. Thorough rinsing with such solvents usually eliminates PCB interference. Volumetric ware should not be heated in a muffle furnace. After drying and cooling, glassware should be sealed and stored in a clean environment to prevent any accumulation of dust or other contaminants. Store inverted or capped with aluminum foil.

3.1.2 The use of high purity reagents and solvents helps to minimize interference problems. Purification of solvents by distillation in all-glass systems may be required.

3.2 Matrix interferences may be caused by contaminants that are co-extracted from the sample. The extent of matrix interferences will vary considerably from source to source, depending upon the nature and diversity of the industrial complex or municipality being sampled. The cleanup procedure in Section 11 can be used to overcome many of these interferences, but unique samples may require additional cleanup approaches to achieve the MDL listed in Table 1.

3.3 Dichlorobenzenes are known to coelute with haloethers under some gas chromatographic conditions. If these materials are present together in a sample, it may be necessary to analyze the extract with two different column packings to completely resolve all of the compounds.

4. Safety

4.1 The toxicity or carcinogenicity of each reagent used in this method has not been precisely defined; however, each chemical compound should be treated as a potential health hazard. From this viewpoint, exposure to these chemicals must be reduced to the lowest possible level by whatever means available. The laboratory is responsible for maintaining a current awareness file of OSHA regulations regarding the safe handling of the chemicals specified in this method. A reference file of material data handling sheets should also be made available to all personnel involved in the chemical analysis. Additional references to laboratory safety are available and have been identified[4-6] for the information of the analyst.

5. Apparatus and Materials

5.1 Sampling equipment, for discrete or composite sampling.

5.1.1 Grab sample bottle—1-L or 1-qt, amber glass, fitted with a screw cap lined with Teflon. Foil may be substituted for Teflon if the sample is not corrosive. If amber bottles are not available, protect samples from light. The bottle and cap liner must be washed, rinsed with acetone or methylene chloride, and dried before use to minimize contamination.

5.1.2 Automatic sampler (optional)—The sampler must incorporate glass sample containers for the collection of a minimum of 250 mL of sample. Sample containers must be kept refrigerated at 4 °C and protected from light during compositing. If the sampler uses a peristaltic pump, a minimum length of compressible silicone rubber tubing may be used. Before use, however, the compressible tubing should be thoroughly rinsed with methanol, followed by repeated rinsings with distilled water to minimize the potential for contamination of the sample. An integrating flow meter is required to collect flow proportional composites.

5.2 Glassware (All specifications are suggested. Catalog numbers are included for illustration only.):

5.2.1 Separatory funnel—2-L, with Teflon stopcock.

5.2.2 Drying column—Chromatographic column, approximately 400 mm long × 19 mm ID, with coarse frit filter disc.

5.2.3 Chromatographic column—400 mm long × 19 mm ID, with Teflon stopcock and coarse frit filter disc at bottom (Kontes K–420540–0224 or equivalent).

5.2.4 Concentrator tube, Kuderna-Danish—10-mL, graduated (Kontes K–570050–1025 or equivalent). Calibration must be checked at the volumes employed in the test. Ground glass stopper is used to prevent evaporation of extracts.

5.2.5 Evaporative flask, Kuderna-Danish—500-mL (Kontes K–570001–0500 or equivalent). Attach to concentrator tube with springs.

5.2.6 Snyder column, Kuderna-Danish—Three-ball macro (Kontes K–503000–0121 or equivalent).

5.2.7 Vials—10 to 15-mL, amber glass, with Teflon-lined screw cap.

5.3 Boiling chips—Approximately 10/40 mesh. Heat to 400 °C for 30 min or Soxhlet extract with methylene chloride.

5.4 Water bath—Heated, with concentric ring cover, capable of temperature control (±2°C). The bath should be used in a hood.

5.5 Balance—Analytical, capable of accurately weighing 0.0001 g.

5.6 Gas chromatograph—An analytical system complete with temperature programmable gas chromatograph suitable for on-column injection and all required accessories including syringes, analytical columns, gases, detector, and strip-chart recorder. A data system is recommended for measuring peak areas.

5.6.1 Column 1—1.8 m long × 2 mm ID glass, packed with 3% SP–1000 on Supelcoport (100/120 mesh) or equivalent. This column was used to develop the method performance statements in Section 14. Guidelines for the use of alternate column packings are provided in Section 12.1.

5.6.2 Column 2—1.8 m long × 2 mm ID glass, packed with 2,6-diphenylene oxide polymer (60/80 mesh), Tenax, or equivalent.

5.6.3 Detector—Halide specific detector: electrolytic conductivity or microcoulometric. These detectors have proven effective in the analysis of wastewaters for the parameters listed in the scope (Section 1.1). The Hall conductivity detector was used to develop the method performance statements in Section 14. Guidelines for the use of alternate detectors are provided in Section 12.1. Although less selective, an electron capture detector is an acceptable alternative.

6. Reagents

6.1 Reagent water—Reagent water is defined as a water in which an interferent is not observed at the MDL of the parameters of interest.

6.2 Sodium thiosulfate—(ACS) Granular.

6.3 Acetone, hexane, methanol, methylene chloride, petroleum ether (boiling range 30–60 °C)—Pesticide quality or equivalent.

6.4 Sodium sulfate—(ACS) Granular, anhydrous. Purify by heating at 400 °C for 4 h in a shallow tray.

6.5 Florisil—PR Grade (60/100 mesh). Purchase activated at 1250 °F and store in the dark in glass containers with ground glass stoppers or foil-lined screw caps. Before use, activate each batch at least 16 h at 130 °C in a foil-covered glass container and allow to cool.

6.6 Ethyl ether—Nanograde, redistilled in glass if necessary.

6.6.1 Ethyl ether must be shown to be free of peroxides before it is used as indicated by EM Laboratories Quant test strips. (Available from Scientific Products Co., Cat. No. P1126–8, and other suppliers.)

6.6.2 Procedures recommended for removal of peroxides are provided with the test strips. After cleanup, 20 mL of ethyl alcohol preservative must be added to each liter of ether.

6.7 Stock standard solutions (1.00 μg/μL)—Stock standard solutions can be prepared from pure standard materials or purchased as certified solutions.

6.7.1 Prepare stock standard solutions by accurately weighing about 0.0100 g of pure material. Dissolve the material in acetone and dilute to volume in a 10-mL volumetric flask. Larger volumes can be used at the convenience of the analyst. When compound purity is assayed to be 96% or greater, the weight can be used without correction to calculate the concentration of the stock standard. Commercially prepared stock standards can be used at any concentration if they are certified by the manufacturer or by an independent source.

6.7.2 Transfer the stock standard solutions into Teflon-sealed screw-cap bottles. Store at 4 °C and protect from light. Stock standard solutions should be checked frequently for signs of degradation or evaporation, especially just prior to preparing calibration standards from them.

6.7.3 Stock standard solutions must be replaced after six months, or sooner if comparison with check standards indicates a problem.

6.8 Quality control check sample concentrate—See Section 8.2.1.

7. Calibration

7.1 Establish gas chromatographic operating conditions equivalent to those given in Table 1. The gas chromatographic system can be calibrated using the external standard technique (Section 7.2) or the internal standard technique (Section 7.3).

7.2 External standard calibration procedure:

7.2.1 Prepare calibration standards at a minimum of three concentration levels for each parameter of interest by adding volumes of one or more stock standards to a volumetric flask and diluting to volume with hexane. One of the external standards should be at a concentration near, but above, the MDL (Table 1) and the other concentrations should correspond to the expected range of concentrations found in real samples or should define the working range of the detector.

7.2.2 Using injections of 2 to 5 µL, analyze each calibration standard according to Section 12 and tabulate peak height or area responses against the mass injected. The results can be used to prepare a calibration curve for each compound. Alternatively, if the ratio of response to amount injected (calibration factor) is a constant over the working range (<10% relative standard deviation, RSD), linearity through the origin can be assumed and the average ratio or calibration factor can be used in place of a calibration curve.

7.3 Internal standard calibration procedure—To use this approach, the analyst must select one or more internal standards that are similar in analytical behavior to the compounds of interest. The analyst must further demonstrate that the measurement of the internal standard is not affected by method or matrix interferences. Because of these limitations, no internal standard can be suggested that is applicable to all samples.

7.3.1 Prepare calibration standards at a minimum of three concentration levels for each parameter of interest by adding volumes of one or more stock standards to a volumetric flask. To each calibration standard, add a known constant amount of one or more internal standards, and dilute to volume with hexane. One of the standards should be at a concentration near, but above, the MDL and the other concentrations should correspond to the expected range of concentrations found in real samples or should define the working range of the detector.

7.3.2 Using injections of 2 to 5 µL, analyze each calibration standard according to Section 12 and tabulate peak height or area responses against concentration for each compound and internal standard. Calculate response factors (RF) for each compound using Equation 1.

$$\mathrm{RF} = \frac{(A_s)(C_{is})}{(A_{is})(C_s)}$$

Equation 1

where:

A_s=Response for the parameter to be measured.

A_{is}=Response for the internal standard.

C_{is}=Concentration of the internal standard (µg/L).

C_s=Concentration of the parameter to be measured (µg/L).

If the RF value over the working range is a constant (<10% RSD), the RF can be assumed to be invariant and the average RF can be used for calculations. Alternatively, the results can be used to plot a calibration curve of response ratios, A_s/A_{is}, vs. RF.

7.4 The working calibration curve, calibration factor, or RF must be verified on each working day by the measurement of one or more calibration standards. If the response for any parameter varies from the predicted response by more than ±15%, a new calibration curve must be prepared for that compound.

7.5 The cleanup procedure in Section 11 utilizes Florisil column chromatography. Florisil from different batches or sources may vary in adsorptive capacity. To standardize the amount of Florisil which is used, the use of lauric acid value[7] is suggested. The referenced procedure determines the adsorption from hexane solution of lauric acid (mg) per g of Florisil. The amount of Florisil to be used for each column is calculated by dividing 110 by this ratio and multiplying by 20 g.

7.6 Before using any cleanup procedure, the analyst must process a series of calibration standards through the procedure to validate elution patterns and the absence of interferences from the reagents.

8. Quality Control

8.1 Each laboratory that uses this method is required to operate a formal quality control program. The minimum requirements of this program consist of an initial demonstration of laboratory capability and an ongoing analysis of spiked samples to evaluate and document data quality. The laboratory must maintain records to document the quality of data that is generated. Ongoing data quality checks are compared with established performance criteria to determine if the results of analyses meet the performance characteristics of the method. When results of sample spikes indicate atypical method performance, a quality control check standard must be analyzed to confirm that the measurements were performed in an in-control mode of operation.

8.1.1 The analyst must make an initial, one-time, demonstration of the ability to generate acceptable accuracy and precision with this method. This ability is established as described in Section 8.2.

8.1.2 In recognition of advances that are occurring in chromatography, the analyst is permitted certain options (detailed in Sections 10.4, 11.1, and 12.1) to improve the separations or lower the cost of measurements. Each time such a modification is made to the method, the analyst is required to repeat the procedure in Section 8.2.

8.1.3 Before processing any samples, the analyst must analyze a reagent water blank to demonstrate that interferences from the analytical system and glassware are under control. Each time a set of samples is extracted or reagents are changed, a reagent water blank must be processed as a safeguard against laboratory contamination.

8.1.4 The laboratory must, on an ongoing basis, spike and analyze a minimum of 10% of all samples to monitor and evaluate laboratory data quality. This procedure is described in Section 8.3.

8.1.5 The laboratory must, on an ongoing basis, demonstrate through the analyses of quality control check standards that the operation of the measurement system is in control. This procedure is described in Section 8.4. The frequency of the check standard analyses is equivalent to 10% of all samples analyzed but may be reduced if spike recoveries from samples (Section 8.3) meet all specified quality control criteria.

8.1.6 The laboratory must maintain performance records to document the quality of data that is generated. This procedure is described in Section 8.5.

8.2 To establish the ability to generate acceptable accuracy and precision, the analyst must perform the following operations.

8.2.1 A quality control (QC) check sample concentrate is required containing each parameter of interest at a concentration of 100 µg/mL in acetone. The QC check sample concentrate must be obtained from the U.S. Environmental Protection Agency, Environmental Monitoring and Support Laboratory in Cincinnati, Ohio, if available. If not available from that source, the QC check sample concentrate must be obtained from another external source. If not available from either source above, the QC check sample concentrate must be prepared by the laboratory using stock standards prepared independently from those used for calibration.

8.2.2 Using a pipet, prepare QC check samples at a concentration of 100 µg/L by adding 1.00 mL of QC check sample concentrate to each of four 1–L aliquots of reagent water.

8.2.3 Analyze the well-mixed QC check samples according to the method beginning in Section 10.

8.2.4 Calculate the average recovery ($\bar{X}$) in µg/L, and the standard deviation of the recovery (s) in µg/L, for each parameter using the four results.

8.2.5 For each parameter compare s and $\bar{X}$ with the corresponding acceptance criteria for precision and accuracy, respectively, found in Table 2. If s and $\bar{X}$ for all parameters of interest meet the acceptance criteria, the system performance is acceptable and analysis of actual samples can begin. If any individual s exceeds the precision limit or any individual $\bar{X}$ falls outside the range for accuracy, the system performance is unacceptable for that parameter. Locate and correct the source of the problem and repeat the test for all parameters of interest beginning with Section 8.2.2.

8.3 The laboratory must, on an ongoing basis, spike at least 10% of the samples from each sample site being monitored to assess accuracy. For laboratories analyzing one to ten samples per month, at least one spiked sample per month is required.

8.3.1. The concentration of the spike in the sample should be determined as follows:

8.3.1.1 If, as in compliance monitoring, the concentration of a specific parameter in the sample is being checked against a regulatory concentration limit, the spike should be at that limit or 1 to 5 times higher than the background concentration determined in Section 8.3.2, whichever concentration would be larger.

8.3.1.2 If the concentration of a specific parameter in the sample is not being checked against a limit specific to that parameter, the spike should be at 100 µg/L or 1 to 5 times higher than the background concentration determined in Section 8.3.2, whichever concentration would be larger.

8.3.1.3 If it is impractical to determine background levels before spiking (e.g., maximum holding times will be exceeded), the spike concentration should be (1) the regulatory concentration limit, if any; or, if none (2) the larger of either 5 times higher than the expected background concentration or 100 µg/L.

8.3.2 Analyze one sample aliquot to determine the background concentration (B) of each parameter. If necessary, prepare a new QC check sample concentrate (Section 8.2.1) appropriate for the background concentrations in the sample. Spike a second sample aliquot with 1.0 mL of the QC check sample concentrate and analyze it to determine the concentration after spiking (A) of each parameter. Calculate each percent recovery (P) as $100(A-B)\%/T$, where T is the known true value of the spike.

8.3.3 Compare the percent recovery (P) for each parameter with the corresponding QC acceptance criteria found in Table 2. These acceptance criteria were calculated to include an allowance for error in measurement of both the background and spike concentrations, assuming a spike to background ratio of 5:1. This error will be accounted for to the extent that the analyst's spike to background ratio approaches 5:1.[8] If spiking was performed at a concentration lower than 100 µg/L, the analyst must use either the QC acceptance criteria in Table 2, or optional QC acceptance criteria calculated for the specific spike concentration. To calculate optional acceptance criteria for the recovery of a parameter: (1) Calculate accuracy (X') using the equation in Table 3, substituting the spike concentration (T) for C; (2) calculate overall precision (S') using the equation in Table 3, substituting X' for $\bar{X}$; (3) calculate the range for recovery at the spike concentration as $(100\ X'/T) \pm 2.44(100\ S'/T)\%$.[8]

8.3.4 If any individual P falls outside the designated range for recovery, that parameter has failed the acceptance criteria. A check standard containing each parameter that failed the criteria must be analyzed as described in Section 8.4.

8.4 If any parameter fails the acceptance criteria for recovery in Section 8.3, a QC check standard containing each parameter that failed must be prepared and analyzed.

NOTE: The frequency for the required analysis of a QC check standard will depend upon the number of parameters being simultaneously tested, the complexity of the sample matrix, and the performance of the laboratory.

8.4.1 Prepare the QC check standard by adding 1.0 m/L of QC check sample concentrate (Section 8.2.1 or 8.3.2) to 1 L of reagent water. The QC check standard needs only to contain the parameters that failed criteria in the test in Section 8.3.

8.4.2 Analyze the QC check standard to determine the concentration measured (A) of each parameter. Calculate each percent recovery (P_s) as 100 (A/T)%, where T is the true value of the standard concentration.

8.4.3 Compare the percent recovery (P_s) for each parameter with the corresponding QC acceptance criteria found in Table 2. Only parameters that failed the test in Section 8.3 need to be compared with these criteria. If the recovery of any such parameter falls outside the designated range, the laboratory performance for that parameter is judged to be out of control, and the problem must be immediately identified and corrected. The analytical result for that parameter in the unspiked sample is suspect and may not be reported for regulatory compliance purposes.

8.5 As part of the QC program for the laboratory, method accuracy for wastewater samples must be assessed and records must be maintained. After the analysis of five spiked wastewater samples as in Section 8.3, calculate the average percent recovery ($\bar{P}$) and the standard deviation of the percent recovery (s_p). Express the accuracy assessment as a percent recovery interval from $\bar{P}-2s_p$ to $\bar{P}+2s_p$. If $\bar{P}=90\%$ and $s_p=10\%$, for example, the accuracy interval is expressed as 70–110%. Update the accuracy assessment for each parameter on a regular basis (e.g. after each five to ten new accuracy measurements).

8.6 It is recommended that the laboratory adopt additional quality assurance practices for use with this method. The specific practices that are most productive depend upon the needs of the laboratory and the nature of the samples. Field duplicates may be analyzed to assess the precision of the environmental measurements. When doubt exists over the identification of a peak on the chromatogram, confirmatory techniques such as gas chromatography with a dissimilar column, specific element detector, or mass spectrometer must be used. Whenever possible, the laboratory should analyze standard reference materials and participate in relevant performance evaluation studies.

9. Sample Collection, Preservation, and Handling

9.1 Grab samples must be collected in glass containers. Conventional sampling practices[9] should be followed, except that the bottle must not be prerinsed with sample before collection. Composite samples should be collected in refrigerated glass containers in accordance with the requirements of the program. Automatic sampling equipment must be as free as possible of Tygon tubing and other potential sources of contamination.

9.2 All samples must be iced or refrigerated at 4 °C from the time of collection until extraction. Fill the sample bottles and, if residual chlorine is present, add 80 mg of sodium thiosulfate per liter of sample and mix well. EPA Methods 330.4 and 330.5 may be used for measurement of residual chlorine.[10] Field test kits are available for this purpose.

9.3 All samples must be extracted within 7 days of collection and completely analyzed within 40 days of extraction.[2]

10. Sample Extraction

10.1 Mark the water meniscus on the side of the sample bottle for later determination of sample volume. Pour the entire sample into a 2-L separatory funnel.

10.2 Add 60 mL methylene chloride to the sample bottle, seal, and shake 30 s to rinse the inner surface. Transfer the solvent to the separatory funnel and extract the sample by shaking the funnel for 2 min with periodic venting to release excess pressure. Allow the organic layer to separate from the water phase for a minimum of 10 min. If the emulsion interface between layers is more than one-third the volume of the solvent layer, the analyst must employ mechanical techniques to complete the phase separation. The optimum technique depends upon the sample, but may include stirring, filtration of the emulsion through glass wool, centrifugation, or other physical methods. Collect the methylene chloride extract in a 250-mL Erlenmeyer flask.

10.3 Add a second 60-mL volume of methylene chloride to the sample bottle and repeat the extraction procedure a second time, combining the extracts in the Erlenmeyer flask. Perform a third extraction in the same manner.

10.4 Assemble a Kuderna-Danish (K-D) concentrator by attaching a 10-mL concentrator tube to a 500-mL evaporative flask. Other concentration devices or techniques may be used in place of the K-D concentrator if the requirements of Section 8.2 are met.

10.5 Pour the combined extract through a solvent-rinsed drying column containing about 10 cm of anhydrous sodium sulfate, and collect the extract in the K-D concentrator. Rinse the Erlenmeyer flask and column with 20 to 30 mL of methylene chloride to complete the quantitative transfer.

10.6 Add one or two clean boiling chips to the evaporative flask and attach a three-ball Snyder column. Prewet the Snyder column by adding about 1 mL of methylene chloride to the top. Place the K-D apparatus on a hot water bath (60 to 65 °C) so that the concentrator tube is partially immersed in the hot water, and the entire lower rounded surface of the flask is bathed with hot vapor. Adjust the vertical position of the apparatus and the water temperature as required to complete the concentration in 15 to 20 min. At the proper rate of distillation the balls of the column will actively chatter but the chambers will not flood with condensed solvent. When the apparent volume of liquid reaches 1 mL, remove the K-D apparatus and allow it to drain and cool for at least 10 min.

NOTE: Some of the haloethers are very volatile and significant losses will occur in concentration steps if care is not exercised. It is important to maintain a constant gentle evaporation rate and not to allow the liquid volume to fall below 1 to 2 mL before removing the K-D apparatus from the hot water bath.

10.7 Momentarily remove the Snyder column, add 50 mL of hexane and a new boiling chip, and reattach the Snyder column. Raise the temperature of the water bath to 85 to 90 °C. Concentrate the extract as in Section 10.6, except use hexane to prewet the column. The elapsed time of concentration should be 5 to 10 min.

10.8 Remove the Snyder column and rinse the flask and its lower joint into the concentrator tube with 1 to 2 mL of hexane. A 5-mL syringe is recommended for this operation. Stopper the concentrator tube and store refrigerated if further processing will not be performed immediately. If the extract will be stored longer than two days, it should be transferred to a Teflon-sealed screw-cap vial. If the sample extract requires no further cleanup, proceed with gas chromatographic analysis (Section 12). If the sample requires further cleanup, proceed to Section 11.

10.9 Determine the original sample volume by refilling the sample bottle to the mark and transferring the liquid to a 1000-mL graduated cylinder. Record the sample volume to the nearest 5 mL.

11. Cleanup and Separation

11.1 Cleanup procedures may not be necessary for a relatively clean sample matrix. If particular circumstances demand the use of a cleanup procedure, the analyst may use the procedure below or any other appropriate procedure. However, the analyst first must demonstrate that the requirements of Section 8.2 can be met using the method as revised to incorporate the cleanup procedure.

11.2 Florisil column cleanup for haloethers:

11.2.1 Adjust the sample extract volume to 10 mL.

11.2.2 Place a weight of Florisil (nominally 20 g) predetermined by calibration (Section 7.5), into a chromatographic column. Tap the column to settle the Florisil and add 1 to 2 cm of anhydrous sodium sulfate to the top.

11.2.3 Preelute the column with 50 to 60 mL of petroleum ether. Discard the eluate and just prior to exposure of the sodium sulfate layer to the air, quantitatively transfer the sample extract onto the column by decantation and subsequent petroleum ether washings. Discard the eluate. Just prior to exposure of the sodium sulfate layer to the air, begin eluting the column with 300 mL of ethyl ether/petroleum ether (6+94) (V/V). Adjust the elution rate to approximately 5 mL/min and collect the eluate in a 500-mL K-D flask equipped with a 10-mL concentrator tube. This fraction should contain all of the haloethers.

11.2.4 Concentrate the fraction as in Section 10.6, except use hexane to prewet the column. When the apparatus is cool, remove the Snyder column and rinse the flask and its lower joint into the concentrator tube with hexane. Adjust the volume of the cleaned up extract to 10 mL with hexane and analyze by gas chromatography (Section 12).

12. Gas Chromatography

12.1 Table 1 summarizes the recommended operating conditions for the gas chromatograph. Included in this table are retention times and MDL that can be achieved under these conditions. Examples of the separations achieved by Columns 1 and 2 are shown in Figures 1 and 2, respectively. Other packed or capillary (open-tubular) columns, chromatographic conditions, or detectors may be used if the requirements of Section 8.2 are met.

12.2 Calibrate the system daily as described in Section 7.

12.3 If the internal standard calibration procedure is being used, the internal standard must be added to the sample extract and mixed thoroughly immediately before injection into the gas chromatrograph.

12.4 Inject 2 to 5 µL of the sample extract or standard into the gas chromatograph using the solvent-flush technique.[11] Smaller (1.0 µL) volumes may be injected if automatic devices are employed. Record the volume injected to the nearest 0.05 µL, the total extract volume, and the resulting peak size in area or peak height units.

12.5 Identify the parameters in the sample by comparing the retention times of the peaks in the sample chromatogram with those of the peaks in standard chromatograms. The width of the retention time window used to make identifications should be based upon measurements of actual retention time variations of standards over the course of a day. Three times the standard deviation of a retention time for a compound can be used to calculate a suggested window size; however, the experience of the analyst should weight heavily in the interpretation of chromatograms.

12.6 If the response for a peak exceeds the working range of the system, dilute the extract and reanalyze.

12.7 If the measurement of the peak response is prevented by the presence of interferences, further cleanup is required.

13. Calculations

13.1 Determine the concentration of individual compounds in the sample.

13.1.1 If the external standard calibration procedure is used, calculate the amount of material injected from the peak response using the calibration curve or calibration factor determined in Section 7.2.2. The concentration in the sample can be calculated from Equation 2.

$$\text{Concentration } (\mu\text{g/L}) = \frac{(\text{A})(\text{V}_t)}{(\text{V}_i)(\text{V}_s)}$$

Equation 2

where:

A=Amount of material injected (ng).

V_i=Volume of extract injected (µL).

V_t=Volume of total extract (µL).

V_s=Volume of water extracted (mL).

13.1.2 If the internal standard calibration procedure is used, calculate the concentration in the sample using the response factor (RF) determined in Section 7.3.2 and Equation 3.

$$\text{Concentration } (\mu\text{g/L}) = \frac{(\text{A}_s)(\text{I}_s)}{(\text{A}_{is})(\text{RF})(\text{V}_o)}$$

Equation 3

where:

A_s=Response for the parameter to be measured.

A_{is}=Response for the internal standard.

I_s=Amount of internal standard added to each extract (µg).

V_o=Volume of water extracted (L).

13.2 Report results in µg/L without correction for recovery data. All QC data obtained should be reported with the sample results.

14. Method Performance

14.1 The method detection limit (MDL) is defined as the minimum concentration of a substance that can be measured and reported with 99% confidence that the value is above zero.[1] The MDL concentrations listed in Table 1 were obtained using reagent water.[12] Similar results were achieved using representative wastewaters. The MDL actually achieved in a given analysis will vary depending on instrument sensitivity and matrix effects.

14.2 This method has been tested for linearity of spike recovery from reagent water and has been demonstrated to be applicable over the concentration range from 4 × MDL to 1000 × MDL.[12]

14.3 This method was tested by 20 laboratories using reagent water, drinking water, surface water, and three industrial wastewaters spiked at six concentrations over the range 1.0 to 626 µ/L.[12] Single operator precision, overall precision, and method accuracy were found to be directly related to the concentration of the parameter and essentially independent of the sample matrix. Linear equations to describe these relationships are presented in Table 3.

REFERENCES

1. 40 CFR part 136, appendix B.

2. ''Determination of Haloethers in Industrial and Municipal Wastewaters,'' EPA 600/4–81–062, National Technical Information Service, PB81–232290, Springfield, Virginia 22161, July 1981.

3. ASTM Annual Book of Standards, Part 31, D3694–78. ''Standard Practices for Preparation of Sample Containers and for Preservation of Organic Constitutents,'' American Society for Testing and Materials, Philadelphia.

4. ''Carcinogens—Working Carcinogens, '' Department of Health, Education, and Welfare, Public Health Services, Center for Disease Control, National Institute for Occupational Safety and Health, Publication No. 77–206, August 1977.

5. ''OSHA Safety and Health Standards, General Industry,'' (29 CFR part 1910), Occupational Safety and Health Administration, OSHA 2206 (Revised, January 1976).

6. ''Safety in Academic Chemistry Laboratories,'' American Chemical Society Publication, Committee on Chemical Safety, 3rd Edition, 1979.

7. Mills., P.A. ''Variation of Florisil Activity: Simple Method for Measuring Absorbent Capacity and Its Use in Standardizing

Florisil Columns,'' *Journal of the Association of Official Analytical Chemists*, *51*, 29 (1968).

8. Provost, L.P., and Elder, R.S. ''Interpretation of Percent Recovery Data,'' *American Laboratory*, *15*, 58–63 (1983). (The value 2.44 used in the equation in Section 8.3.3 is two times the value 1.22 derived in this report.)

9. ASTM Annual Book of Standards, Part 31, D3370–76. ''Standard Practices for Sampling Water,'' American Society for Testing and Materials, Philadelphia.

10. ''Methods 330.4 (Titrimetric, DPD-FAS) and 330.5 (Spectrophotometric, DPD) for Chlorine, Total Residual,'' Methods for Chemical Analysis of Water and Wastes, EPA–600/4–79–020, U.S. Environmental Protection Agency, Environmental Monitoring and Support Laboratory, Cincinnati, Ohio 45268, March 1979.

11. Burke, J.A. ''Gas Chromatography for Pesticide Residue Analysis; Some Practical Aspects,'' *Journal of the Association of Official Analytical Chemists*, *48*, 1037 (1965).

12. ''EPA Method Study 21, Method 611, Haloethers,'' EPA 600/4–84–052, National Technical Information Service, PB84–205939, Springfield, Virginia 22161, June 1984.

TABLE 1—CHROMATOGRAPHIC CONDITIONS AND METHODS DETECTION LIMITS

Parameters	Retention time (min)		Method detection limit (μ/L)
	Column 1	Column 2	
Bis(2-chloroisopropyl) ether	8.4	9.7	0.8
Bis(2-chloroethyl) ether	9.3	9.1	0.3
Bis(2-chloroethoxy) methane	13.1	10.0	0.5
4-Chlorophenyl ether	19.4	15.0	3.9
4-Bromophenyl phenyl ether	21.2	16.2	2.3

AColumn 1 conditions: Supelcoport (100/120 mesh) coated with 3% SP–1000 packed in a 1.8 m long × 2 mm ID glass column with helium carrier gas at 40 mL/min. flow rate. Column temperature held at 60 °C for 2 min. after injection then programmed at 8 °C/min. to 230 °C and held for 4 min. Under these conditions the retention time for Aldrin is 22.6 min.

AColumn 2 conditions: Tenax-GC (60/80 mesh) packed in a 1.8 m long × 2mm ID glass column with helium carrier gas at 40 mL/min. flow rate. Column temperature held at 150 °C for 4 min. after injection then programmed at 16 °C/min. to 310 °C. Under these conditions the retention time for Aldrin is 18.4 min.

TABLE 2—QC ACCEPTANCE CRITERIA—METHOD 611

Parameter	Test conc. (μg/L)	Limit for s (μg/L)	Range for $\bar{X}$ (μg/L)	Range for P, P_s percent
Bis (2-chloroethyl)ether	100	26.3	26.3–136.8	11–152
Bis (2-chloroethoxy)methane	100	25.7	27.3–115.0	12–128
Bis (2-chloroisopropyl)ether	100	32.7	26.4–147.0	9–165
4-Bromophenyl phenyl ether	100	39.3	7.6 –167.5	D–189
4-Chlorophenyl phenyl ether	100	30.7	15.4–152.5	D–170

s=Standard deviation of four recovery measurements, in μg/L (Section 8.2.4).
$\bar{X}$=Average recovery for four recovery measurements, in μg/L (Section 8.2.4).
P, P_s=Percent recovery measured (Section 8.3.2, Section 8.4.2).
D=Detected; result must be greater than zero.

NOTE: These criteria are based directly upon the method performance data in Table 3. Where necessary, the limits for recovery have been broadened to assure applicability of the limits to concentrations below those used to develop Table 3.

TABLE 3—METHOD ACCURACY AND PRECISION AS FUNCTIONS OF CONCENTRATION—METHOD 611

Parameter	Accuracy, as recovery, X′ (μg/L)	Single analyst precision, s_r' (μg/L)	Overall precision, S′ (μg/L)
Bis(2-chloroethyl) ether	0.81C+0.54	$0.19\bar{X}+0.28$	$0.35\bar{X}+0,36$
Bis(2-chloroethoxy) methane	0.71C+0.13	$0.20\bar{X}+0.15$	$0.33\bar{X}+0.11$
Bis(2-chloroisopropyl) ether	0.85C+1.67	$0.20\bar{X}+1.05$	$0.36\bar{X}+0.79$
4–Bromophenyl phenyl ether	0.85C+2.55	$0.25\bar{X}+0.21$	$0.47\bar{X}+0.37$
4–Chlorophenyl phenyl ether	0.82C+1.97	$0.18\bar{X}+2.13$	$0.41\bar{X}+0.55$

X′ = Expected recovery for one or more measuremelts of a sample containing a concentration of C, in μg/L.
s_r' = Expected single analyst standard deviation of measurements at an average concentration found of $\bar{X}$, in μg/L.
S′ = Expected interlaboratory standard deviation of measurements at an average concentration found of $\bar{X}$, in μg/L.
C =True value for the concentration, in μg/L.
$\bar{X}$ = Average recovery found for measurements of samples containing a concentration of C, in μg/L.

COLUMN: 3% SP-1000 ON SUPELCOPORT
PROGRAM 60°C FOR 2 MIN, 8°C/MIN TO 230°C
DETECTOR: HALL ELECTROLYTIC CONDUCTIVITY

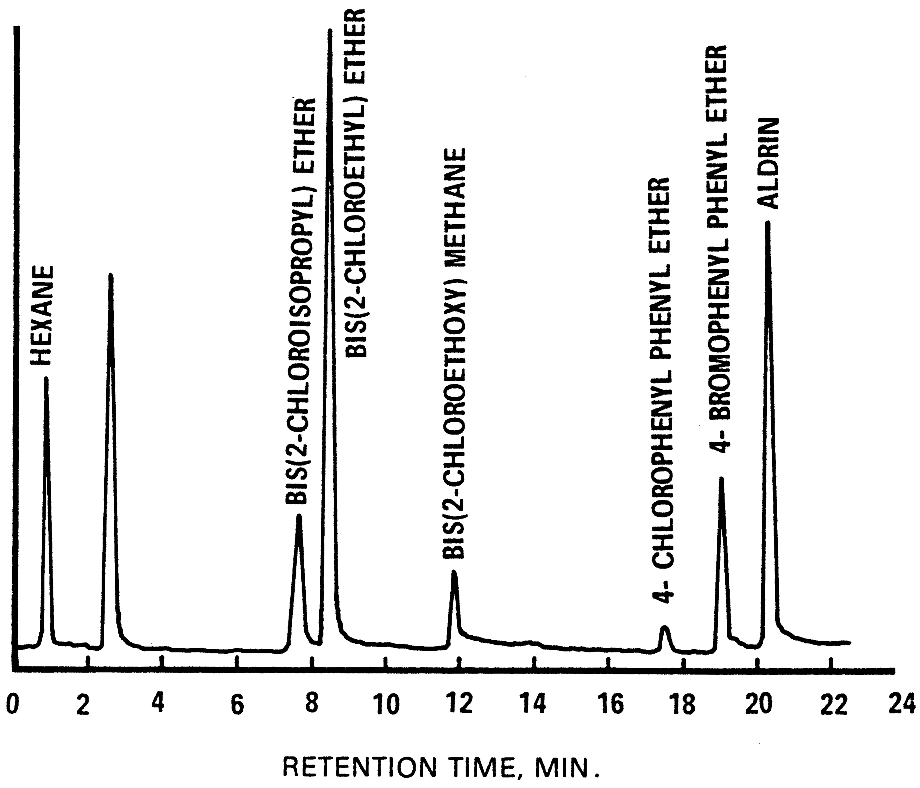

Figure 1. Gas chromatogram of haloethers.

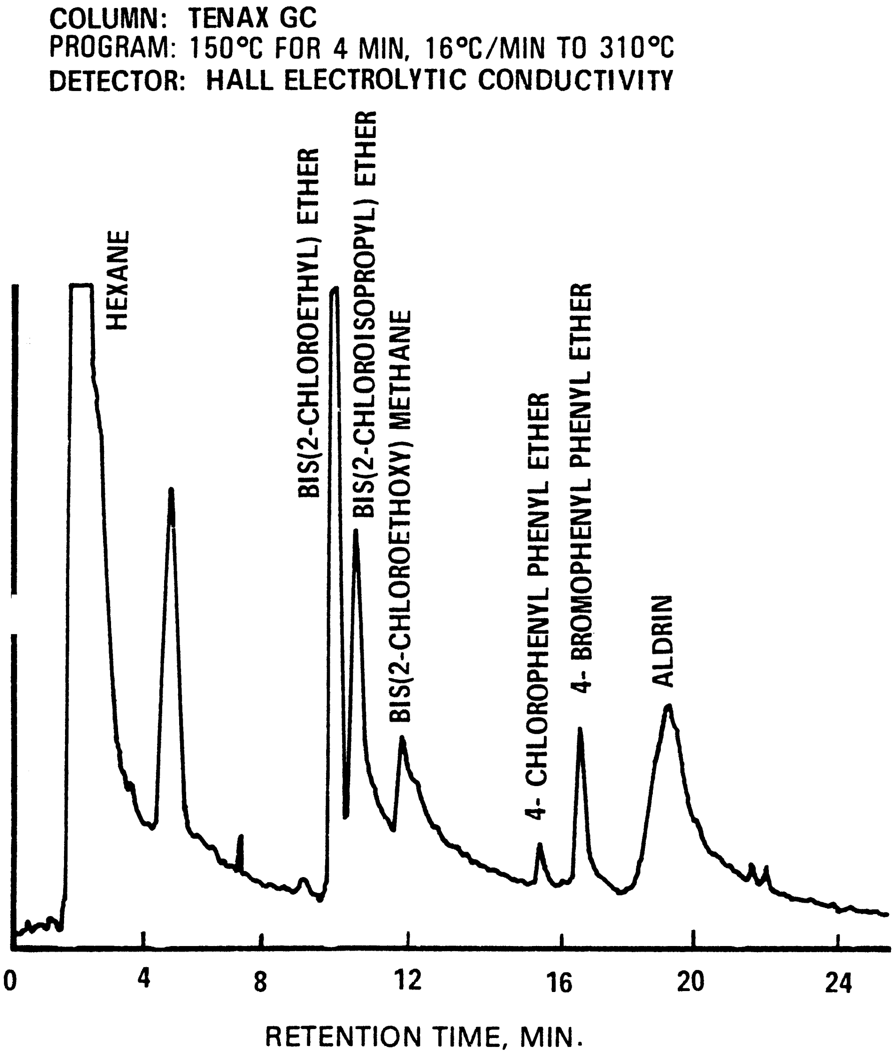

Figure 2. Gas chromatogram of haloethers.

METHOD 612—CHLORINATED HYDROCARBONS

1. Scope and Application

1.1 This method covers the determination of certain chlorinated hydrocarbons. The following parameters can be determined by this method:

Parameter	STORET No.	CAS No.
2-Chloronaphthalene	34581	91–58–7
1,2-Dichlorobenzene	34536	95–50–1
1,3-Dichlorobenzene	34566	541–73–1
1,4-Dichlorobenzene	34571	106–46–7
Hexachlorobenzene	39700	118–74–1
Hexachlorobutadiene	34391	87–68–3
Hexachlorocyclopentadiene	34386	77–47–4
Hexachloroethane	34396	67–72–1

Parameter	STORET No.	CAS No.
1,2,4-Trichlorobenzene	34551	120–82–1

1.2 This is a gas chromatographic (GC) method applicable to the determination of the compounds listed above in municipal and industrial discharges as provided under 40 CFR 136.1. When this method is used to analyze unfamiliar samples for any or all of the compounds above, compound identifications should be supported by at least one additional qualitative technique. This method describes a second gas chromatographic column that can be used to confirm measurements made with the primary column. Method 625 provides gas chromatograph/mass spectrometer (GC/MS) conditions appropriate for the qualitative and quantitative confirmation of results for all of the parameters listed above, using the extract produced by this method.

1.3 The method detection limit (MDL, defined in Section 14.1)[1] for each parameter is listed in Table 1. The MDL for a specific wastewater may differ from those listed, depending upon the nature of interferences in the sample matrix.

1.4 The sample extraction and concentration steps in this method are essentially the same as in Methods 606, 608, 609, and 611. Thus, a single sample may be extracted to measure the parameters included in the scope of each of these methods. When cleanup is required, the concentration levels must be high enough to permit selecting aliquots, as necessary, to apply appropriate cleanup procedures. The analyst is allowed the latitude, under Section 12, to select chromatographic conditions appropriate for the simultaneous measurement of combinations of these parameters.

1.5 Any modification of this method, beyond those expressly permitted, shall be considered as a major modification subject to application and approval of alternate test procedures under 40 CFR 136.4 and 136.5.

1.6 This method is restricted to use by or under the supervision of analysts experienced in the use of a gas chromatograph and in the interpretation of gas chromatograms. Each analyst must demonstrate the ability to generate acceptable results with this method using the procedure described in Section 8.2.

2. Summary of Method

2.1 A measured volume of sample, approximately 1–L, is extracted with methylene chloride using a separatory funnel. The methylene chloride extract is dried and exchanged to hexane during concentration to a volume of 10 mL or less. The extract is separated by gas chromatography and the parameters are then measured with an electron capture detector.[2]

2.2 The method provides a Florisil column cleanup procedure to aid in the elimination of interferences that may be encountered.

3. Interferences

3.1 Method interferences may be caused by contaminants in solvents, reagents, glassware, and other sample processing hardware that lead to discrete artifacts and/or elevated baselines in gas chromatograms. All of these materials must be routinely demonstrated to be free from interferences under the conditions of the analysis by running laboratory reagent blanks as described in Section 8.1.3.

3.1.1 Glassware must be scrupulously cleaned.[3] Clean all glassware as soon as possible after use by rinsing with the last solvent used in it. Solvent rinsing should be followed by detergent washing with hot water, and rinses with tap water and distilled water. The glassware should then be drained dry, and heated in a muffle furnace at 400 °C for 15 to 30 min. Some thermally stable materials, such as PCBs, may not be eliminated by this treatment. Solvent rinses with acetone and pesticide quality hexane may be substituted for the muffle furnace heating. Thorough rinsing with such solvents usually eliminates PCB interference. Volumetric ware should not be heated in a muffle furnace. After drying and cooling, glassware should be sealed and stored in a clean environment to prevent any accumulation of dust or other contaminants. Store inverted or capped with aluminum foil.

3.1.2 The use of high purity reagents and solvents helps to minimize interference problems. Purification of solvents by distillation in all-glass systems may be required.

3.2 Matrix interferences may be caused by contaminants that are co-extracted from the sample. The extent of matrix interferences will vary considerably from source to source, depending upon the nature and diversity of the industrial complex or municipality being sampled. The cleanup procedure in Section 11 can be used to overcome many of these interferences, but unique samples may require additional cleanup approaches to achieve the MDL listed in Table 1.

4. Safety

4.1 The toxicity or carcinogenicity of each reagent used in this method has not been precisely defined; however, each chemical compound should be treated as a potential health hazard. From this viewpoint, exposure to these chemicals must be reduced to the lowest possible level by whatever means available. The laboratory is responsible for maintaining a current awareness file of OSHA regulations regarding the safe handling of the chemicals specified in this method. A reference file of material data handling sheets should also be made available to all personnel involved in the chemical analysis. Additional references to laboratory safety are available and have been identified[4-6] for the information of the analyst.

5. Apparatus and Materials

5.1 Sampling equipment, for discrete or composite sampling.

5.1.1 Grab sample bottle—1cL or 1-qt, amber glass, fitted with a screw cap lined with Teflon. Foil may be substituted for Teflon if the sample is not corrosive. If amber bottles are not available, protect samples from light. The bottle and cap liner must be washed, rinsed with acetone or methylene chloride, and dried before use to minimize contamination.

5.1.2 Automatic sampler (optional)—The sampler must incorporate glass sample containers for the collection of a minimum of 250 mL of sample. Sample containers must be kept refrigerated at 4 °C and protected from light during compositing. If the sampler uses a peristaltic pump, a minimum length of compressible silicone rubber tubing may be used. Before use, however, the compressible tubing should be thoroughly rinsed with methanol, followed by repeated rinsings with distilled water to minimize the potential for contamination of the sample. An integrating flow meter is required to collect flow proportional composites.

5.2 Glassware (All specifications are suggested. Catalog numbers are included for illustration only.):

5.2.1 Separatory funnel—2–L, with Teflon stopcock.

5.2.2 Drying column—Chromatographic column, approximately 400 mm long × 19 mm ID, with coarse frit filter disc.

5.2.3 Chromatographic column—300 long × 10 mm ID, with Teflon stopcock and coarse frit filter disc at bottom.

5.2.4 Concentrator tube, Kuderna-Danish—10-mL, graduated (Kontes K–570050–1025 or equivalent). Calibration must be checked at the volumes employed in the test. Ground glass stopper is used to prevent evaporation of extracts.

5.2.5 Evaporative flask, Kuderna-Danish—500-mL (Kontes K–570001–0500 or equivalent). Attach to concentrator tube with springs.

5.2.6 Snyder column, Kuderna-Danish—Three-ball macro (Kontes K–503000–0121 or equivalent).

5.2.7 Vials—10 to 15-mL, amber glass, with Teflon-lined screw cap.

5.3 Boiling chips—Approximately 10/40 mesh. Heat to 400 °C for 30 min or Soxhlet extract with methylene chloride.

5.4 Water bath—Heated, with concentric ring cover, capable of temperature control (±2 °C). The bath should be used in a hood.

5.5 Balance—Analytical, capable of accurately weighing 0.0001 g.

5.6 Gas chromatograph—An analytical system complete with gas chromatograph suitable for on-column injection and all required accessories including syringes, analytical columns, gases, detector, and strip-chart recorder. A data system is recommended for measuring peak areas.

5.6.1 Column 1—1.8 m long × 2 mm ID glass, packed with 1% SP–1000 on Supelcoport (100/120 mesh) or equivalent. Guidelines for the use of alternate column packings are provide in Section 12.1.

5.6.2 Column 2—1.8 m long ×2 mm ID glass, packed with 1.5% OV–1/2.4% OV–225 on Supelcoport (80/100 mesh) or equivalent. This column was used to develop the method performance statements in Section 14.

5.6.3 Detector—Electron capture detector. This detector has proven effective in the analysis of wastewaters for the parameters listed in the scope (Section 1.1), and was used to develop the method performance statements in Section 14. Guidelines for the use of alternate detectors are provided in Section 12.1.

6. Reagents

6.1 Reagent water—Reagent water is defined as a water in which an interferent is not observed at the MDL of the parameters of interest.

6.2 Acetone, hexane, isooctane, methanol, methylene chloride, petroleum ether (boiling range 30 to 60 °C)—Pesticide quality or equivalent.

6.3 Sodium sulfate—(ACS) Granular, anhydrous. Purify heating at 400 °C for 4 h in a shallow tray.

6.4 Florisil—PR grade (60/100 mesh). Purchase activated at 1250 °F and store in the dark in glass containers with ground glass stoppers or foil-lined screw caps. Before use, activate each batch at least 16 h at 130 °C in a foil-covered glass container and allow to cool.

6.5 Stock standard solution (1.00 μg/μL)—Stock standard solutions can be prepared from pure standard materials or purchased as certified solutions.

6.5.1 Prepare stock standard solutions by accurately weighing about 0.0100 g of pure material. Dissolve the material in isooctane and dilute to volume in a 120-mL volumetric flask. Larger volumes can be used at the convenience of the analyst. When compound purity is assayed to be 96% or greater, the weight can be used without correction to calculate the concentration of the stock standard. Commercially prepared stock standards can be used at any concentration if they are certified by the manufacturer or by an independent source.

6.5.2 Transfer the stock standard solutions into Teflon-sealed screw-cap bottles. Store at 4 °C and protect from light. Stock standard solutions should be checked frequently for signs of degradation or evaporation, especially just prior to preparing calibration standards from them.

6.5.3 Stock standard solutions must be replaced after six months, or sooner if comparision with check standards indicates a problem.

6.6 Quality control check sample concentrate—See Section 8.2.1.

7. Calibration

7.1 Establish gas chromatographic operating conditions equivalent to those given in Table 1. The gas chromatographic system can be calibrated using the external standard technique (Section 7.2) or the internal standard technique (Section 7.3).

7.2 External standard calibration procedure:

7.2.1 Prepare calibration standards at a minimum of three concentration levels for each parameter of interest by adding volumes of one or more stock standards to a volumetric flask and diluting to volume with isooctane. One of the external standards should be at a concentration near, but above, the MDL (Table 1) and the other concentrations should correspond to the expected range of concentrations found in real samples or should define the working range of the detector.

7.2.2 Using injections of 2 to 5 µL, analyze each calibration standard according to Section 12 and tabulate peak height or area responses against the mass injected. The results can be used to prepare a calibration curve for each compound. Alternatively, if the ratio of response to amount injected (calibration factor) is a constant over the working range (<10% relative standard deviation, RSD), linearity through the origin can be assumed and the average ratio or calibration factor can be used in place of a calibration curve.

7.3 Internal standard calibration procedure—To use this approach, the analyst must select one or more internal standards that are similar in analytical behavior to the compounds of interest. The analyst must further demonstrate that the measurement of the internal standard is not affected by method or matrix interferences. Because of these limitations, no internal standard can be suggested that is applicable to all samples.

7.3.1 Prepare calibration standards at a minimum of three concentration levels for each parameter of interest by adding volumes of one or more stock standards to a volumetric flask. To each calibration standard, add a known constant amount of one or more internal standards, and dilute to volume with isooctane. One of the standards should be at a concentration near, but above, the MDL and the other concentrations should correspond to the expected range of concentrations found in real samples or should define the working range of the detector.

7.3.2 Using injections of 2 to 5 µL, analyze each calibration standard according to Section 12 and tabulate peak height or area responses against concentration for each compound and internal standard. Calculate response factors (RF) for each compound using Equation 1.

$$\mathrm{RF} = \frac{(\mathrm{A_s})(\mathrm{C_{is}})}{(\mathrm{A_{is}})(\mathrm{C_s})}$$

Equation 1

where:

A_s=Response for the parameter to be measured.

A_{is}=Response for the internal standard.

C_{is}=Concentration of the internal standard (µg/L).

C_s=Concentration of the parameter to be measured (µg/L).

If the RF value over the working range is a constant (<10% RSD), the RF can be assumed to be invariant and the average RF can be used for calculations. Alternatively, the results can be used to plot a calibration curve of response ratios, A_s/A_{is}, vs. RF.

7.4 The working calibration curve, calibration factor, or RF must be verified on each working day by the measurement of one or more calibration standards. If the response for any parameter varies from the predicted response by more than ±15%, a new calibration curve must be prepared for that compound.

7.5 Before using any cleanup procedure, the analyst must process a series of calibration standards through the procedure to validate elution patterns and the absence of interferences from the reagents.

8. Quality Control

8.1 Each laboratory that uses this method is required to operate a formal quality control program. The minimum requirements of this program consist of an initial demonstration of laboratory capability and an ongoing analysis of spiked samples to evaluate and document data quality. The laboratory must maintain records to document the quality of data that is generated. Ongoing data quality checks are compared with established performance criteria to determine if the results of analyses meet the performance characteristics of the method. When the results of sample spikes indicate atypical method performance, a quality control check standard must be analyzed to confirm that the measurements were performed in an in-control mode of operation.

8.1.1 The analyst must make an initial, one-time, demonstration of the ability to generate acceptable accuracy and precision with this method. This ability is established as described in Section 8.2.

8.1.2 In recognition of advances that are occurring in chromatography, the analyst is permitted certain options (detailed in Sections 10.4, 11.1, and 12.1) to improve the separations or lower the cost of measurements. Each time such modification is made to the method, the analyst is required to repeat the procedure in Section 8.2.

8.1.3 Before processing any samples, the analyst must analyze a reagent water blank to demonstrate that interferences from the analytical system and glassware are under control. Each time a set of samples is extracted or reagents are changed, a reagent water blank must be processed as a safeguard against laboratory contamination.

8.1.4 The laboratory must, on an ongoing basis, spike and analyze a minimum of 10% of all samples to monitor and evaluate laboratory data quality. This procedure is described in Section 8.3.

8.1.5 The laboratory must, on an ongoing basis, demonstrate through the analyses of quality control check standards that the operation of the measurement system is in control. This procedure is described in Section 8.4. The frequency of the check standard analyses is equivalent to 10% of all samples analyzed but may be reduced if spike recoveries from samples (Section 8.3) meet all specified quality control criteria.

8.1.6 The laboratory must maintain performance records to document the quality of data that is generated. This procedure is described in Section 8.5.

8.2 To establish the ability to generate acceptable accuracy and precision, the analyst must perform the following operations.

8.2.1 A quality control (QC) check sample concentrate is required containing each parameter of interest at the following concentrations in acetone: Hexachloro-substituted parameters, 10 µg/mL; any other chlorinated hydrocarbon, 100 µg/mL. The QC check sample concentrate must be obtained from the U.S. Environmental Protection Agency, Environmental Monitoring and Support Laboratory in Cincinnati, Ohio, if available. If not available from that source, the QC check sample concentrate must be obtained from another external source. If not available from either source above, the QC check sample concentrate must be prepared by the laboratory using stock standards prepared independently from those used for calibration.

8.2.2 Using a pipet, prepare QC check samples at the test concentrations shown in Table 2 by adding 1.00 mL of QC check sample concentrate to each of four 1–L aliquots of reagent water.

8.2.3 Analyze the well-mixed QC check samples according to the method beginning in Section 10.

8.2.4 Calculate the average recovery ($\bar{X}$) in µg/L, and the standard deviation of the recovery (s) in µg/L, for each parameter using the four results.

8.2.5 For each parameter compare s and $\bar{X}$ with the corresponding acceptance criteria for precision and accuracy, respectively, found in Table 2. If s and $\bar{X}$ for all parameters of interest meet the acceptance criteria, the system performance is acceptable and analysis of actual samples can begin. If any individual s exceeds the precision limit or any individual $\bar{X}$ falls outside the range for accuracy, the system performance is unacceptable for that parameter.

NOTE: The large number of parameters in Table 2 presents a substantial probability that one or more will fail at least one of the acceptance criteria when all parameters are analyzed.

8.2.6 When one or more of the parameters tested fail at least one of the acceptance criteria, the analyst must proceed according to Section 8.2.6.1 or 8.2.6.2.

8.2.6.1 Locate and correct the source of the problem and repeat the test for all parameters of interest beginning with Section 8.2.2.

8.2.6.2 Beginning with Section 8.2.2, repeat the test only for those parameters that failed to meet criteria. Repeated failure, however, will confirm a general problem with the measurement system. If this occurs, locate and correct the source of the problem and repeat the test for all compounds of interest beginning with Section 8.2.2.

8.3 The laboratory must, on an ongoing basis, spike at least 10% of the samples from each sample site being monitored to assess accuracy. For laboratories analyzing one to ten samples per month, at least one spike sample per month is required.

8.3.1 The concentration of the spike in the sample should be determined as follows:

8.3.1.1 If, as in compliance monitoring, the concentration of a specific parameter in the sample is being checked against a regulatory concentration limit, the spike should be at that limit or 1 to 5 times higher than the background concentration determined in Section 8.3.2, whichever concentration would be larger.

8.3.1.2 If the concentration of a specific parameter in the sample is not being checked against a limit specific to that parameter, the spike should be at the test concentration in Section 8.2.2 or 1 to 5 times higher than the background concentration determined in Section 8.3.2, whichever concentration would be larger.

8.3.1.3 If it is impractical to determine background levels before spiking (e.g., maximum holding times will be exceeded), the spike concentration should be (1) the regulatory concentration limit, if any; or, if none by (2) the larger of either 5 times higher than the expected background concentration or the test concentration in Section 8.2.2.

8.3.2 Analyze one sample aliquot to determine the background concentration (B) of each parameter. In necessary, prepare a new QC check sample concentrate (Section 8.2.1) appropriate for the background concentrations in the sample. Spike a second sample aliquot with 1.0 mL of the QC check sample concentrate and analyze it to determine the concentration after spiking (A) of each parameter. Calculate each percent recovery (P) as 100 (A−B)%/T, where T is the known true value of the spike.

8.3.3 Compare the percent recovery (P) for each parameter with the corresponding QC acceptance criteria found in Table 2. These acceptance criteria were calculated to include an allowance for error in measurement of both the background and spike concentrations, assuming a spike to background ratio of 5:1. This error will be accounted for to the extent that the analyst's spike to background ratio approaches 5:1.[7] If spiking was performed at a concentration lower than the test concentration in Section 8.2.2, the analyst must use either the QC acceptance criteria in Table 2, or optional QC acceptance criteria calculated for the specific spike concentration. To calculate optional acceptance criteria for the recovery of a parameter: (1) Calculate accuracy (X′) using the equation in Table 3, substituting the spike concentration (T) for C; (2) calculate overall precision (S′) using the equation in Table 3, substituting X′ for $\bar{X}$; (3) calculate the range for recovery at the spike concentration as (100 X′/T) ±2.44 (100 S′/T)%.[7]

8.3.4 If any individual P falls outside the designated range for recovery, that parameter has failed the acceptance criteria. A check standard containing each parameter that failed the criteria must be analyzed as described in Section 8.4.

8.4. If any parameter fails the acceptance criteria for recovery in Section 8.3, a QC check standard containing each parameter that failed must be prepared and analyzed.

NOTE: The frequency for the required analysis of a QC check standard will depend upon the number of parameters being simultaneously tested, the complexity of the sample matrix, and the performance of the laboratory.

8.4.1 Prepare the QC check standard by adding 1.0 mL of QC check sample concentrate (Sections 8.2.1 or 8.3.2) to 1 L of reagent water. The QC check standard needs only to contain the parameters that failed criteria in the test in Section 8.3.

8.4.2 Analyze the QC check standard to determine the concentration measured (A) of each parameter. Calculate each percent recovery (P_s) as 100 (A/T)%, where T is the true value of the standard concentration.

8.4.3 Compare the percent recovery (P_s) for each parameter with the corresponding QC acceptance criteria found in Table 2. Only parameters that failed the test in Section 8.3 need to be compared with these criteria. If the recovery of any such parameter falls outside the designated range, the laboratory performance for that parameter is judged to be out of control, and the problem must be immediately identified and corrected. The analytical result for that parameter in the unspiked sample is suspect and may not be reported for regulatory compliance purposes.

8.5 As part of the QC program for the laboratory, method accuracy for wastewater samples must be assessed and records must be maintained. After the analysis of five spiked wastewater samples as in Section 8.3, calculate the average percent recovery ($\bar{P}$) and the standard deviation of the percent recovery (s_p). Express the accuracy assessment as a percent recovery interval from $P-2s_p$ to $P+2s_p$. If P=90% and s_p=10%, for example, the accuracy interval is expressed as 70–110%. Update the accuracy assessment for each parameter on a regular basis (e.g. after each five to ten new accuracy measurements).

8.6 It is recommended that the laboratory adopt additional quality assurance practices for use with this method. The specific practices that are most productive depend upon the needs of the laboratory and the nature of the samples. Field duplicates may be analyzed to assess the precision of the environmental measurements. When doubt exists over the identification of a peak on the chromatogram, confirmatory techniques such as gas chromatography with a dissimilar column, specific element detector, or mass spectrometer must be used. Whenever possible, the laboratory should analyze standard reference materials and participate in relevent performance evaluation studies.

9. Sample Collection, Preservation, and Handling

9.1 Grab samples must be collected in glass containers. Conventional sampling practices[8] should be followed, except that the bottle must not be prerinsed with sample before collection. Composite samples should be collected in refrigerated glass containers in accordance with the requirements of the program. Automatic sampling equipment must be as free as possible of Tygon tubing and other potential sources of contamination.

9.2 All samples must be iced or refrigerated at 4 °C from the time of collection until extraction.

9.3 All samples must be extracted within 7 days of collection and completely analyzed within 40 days of extraction.[2]

10. Sample Extraction

10.1 Mark the water meniscus on the side of the sample bottle for later determination of sample volume. Pour the entire sample into a 2–L separatory funnel.

10.2 Add 60 mL of methylele chloride to the sample bottle, seal, and shake 30 s to rinse the inner surface. Transfer the solvent to the separatory funnel and extract the sample by shaking the funnel for 2 min with periodic venting to release excess pressure. Allow the organic layer to separate from the water phase for a minimum of 10 min. If the emulsion interface between layers is more than one-third the volume of the solvent layer, the analyst must employ mechanical techniques to complete the phase separation. The optimum technique depends upon the sample, but may include stirring, filtration of the emulsion through glass wool, centrifugation, or other physical methods. Collect the methylene chloride extract in a 250-mL Erlenmeyer flask.

10.3 Add a second 60-mL volume of methylene chloride to the sample bottle and repeat the extraction procedure a second time, combining the extracts in the Erlenmeyer flask. Perform a third extraction in the same manner.

10.4 Assemble a Kuderna-Danish (K-D) concentrator by attaching a 10-mL concentrator tube to a 500-mL evaporative flask. Other concentration devices or techniques may be used in place of the K-D concentrator if the requirements of Section 8.2 are met.

10.5 Pour the combined extract through a solvent-rinsed drying column containing about 10 cm of anhydrous sodium sulfate, and collect the extract in the K-D concentrator. Rinse the Erlenmeyer flask and column with 20 to 30 mL of methylene chloride to complete the quantitative transfer.

10.6 Add one or two clean boiling chips to the evaporative flask and attach a three-ball Snyder column. Prewet the Snyder column by adding about 1 mL of methylene chloride to the top. Place the K-D apparatus on a hot water bath (60 to 65 °C) so that the concentrator tube is partially immersed in the hot water, and the entire lower rounded surface of the flask is bathed with hot vapor. Adjust the vertical position of the apparatus and the water temperature as required to complete the concentration in 15 to 20 min. At the proper rate of distillation the balls of the column will actively chatter but the chambers will not flood with condensed solvent. When the apparent volume of liquid reaches 1 to 2 mL, remove the K-D apparatus and allow it to drain and cool for at least 10 min.

NOTE: The dichloribenzenes have a sufficiently high volatility that significant losses may occur in concentration steps if care is not exercised. It is important to maintain a constant gentle evaporation rate and not to allow the liquid volume to fall below 1 to 2 mL before removing the K-D apparatus from the hot water bath.

10.7 Momentarily remove the Snyder column, add 50 mL of hexane and a new boiling chip, and reattach the Snyder column. Raise the tempeature of the water bath to 85 to 90 °C. Concentrate the extract as in Section 10.6, except use hexane to prewet the column. The elapsed time of concentration should be 5 to 10 min.

10.8 Romove the Snyder column and rinse the flask and its lower joint into the concentrator tube with 1 to 2 mL of hexane. A 5-mL syringe is recommended for this operation. Stopper the concentrator tube and store refrigerated if further processing will not be performed immediately. If the extract will be stored longer than two days, it should be transferred to a Teflon-sealed screw-cap vial. If the sample extract requires no further cleanup, proceed with gas chromatographic analysis (Section 12). If the sample requires further cleanup, proceed to Section 11.

10.9 Determine the original sample volume by refilling the sample bottle to the mark and transferring the liquid to a 1000-mL graduated cylinder. Record the sample volume to the nearest 5 mL.

11. Cleanup and Separation

11.1 Cleanup procedures may not be necessary for a relatively clean sample matrix. If particular circumstances demand the use of a cleanup procedure, the analyst may use the procedure below or any other appropriate procedure. However, the analyst first must demonstrate that the requirements of Section 8.2 can be met using the method as revised to incorporate the cleanup procedure.

11.2 Florisil column cleanup for chlorinated hydrocarbons:

11.2.1 Adjust the sample extract to 10 mL with hexane.

11.2.2 Place 12 g of Florisil into a chromatographic column. Tap the column to settle the Florisil and add 1 to 2 cm of anhydrous sodium sulfate to the top.

11.2.3 Preelute the column with 100 mL of petroleum ether. Discard the eluate and just prior to exposure of the sodium sulfate layer to the air, quantitatively transfer the sample extract onto the column by decantation and subsequent petroleum ether washings. Discard the eluate. Just prior to exposure of the sodium sulfate layer to the air, begin eluting the column with 200 mL of petroleum ether and collect the eluate in a 500-mL K-D flask equipped with a 10-mL concentrator tube. This fraction should contain all of the chlorinated hydrocarbons.

11.2.4 Concentrate the fraction as in Section 10.6, except use hexane to prewet the column. When the apparatus is cool, remove the Snyder column and rinse the flask and its lower joint into the concentrator tube with hexane. Analyze by gas chromatography (Section 12).

12. Gas Chromatography

12.1 Table 1 summarizes the recommended operating conditions for the gas chromatograph. Included in this table are retention times and MDL that can be achieved under these conditions. Examples of the separations achieved by Columl 2 are shown in Figures 1 and 2. Other packed or capillary (open-tubular) columns, chromatographic conditions, or detectors may be used if the requirements of Section 8.2 are met.

12.2 Calibrate the system daily as described in Section 7.

12.3 If the internal standard calibration procedure is being used, the internal standard must be added to the sample extract and mixed throughly immediately before injection into the gas chromatograph.

12.4 Inject 2 to 5 µL of the sample extract or standard into the gas chromatograph using the solvent-flush techlique.[9] Smaller (1.0 µL) volumes may be injected if automatic devices are employed. Record the volume injected to the nearest 0.05 µL, the total extract volume, and the resulting peak size in area or peak height units.

12.5 Identify the parameters in the sample by comparing the retention times of the peaks in the sample chromatogram with those of the peaks in standard chromatograms. The width of the retention time window used to make identifications should be based upon measurements of actual retention time variations of standards over the course of a day. Three times the standard deviation of a retention time for a compound can be used to calculate a suggested window size; however, the experience of the analyst should weigh heavily in the interpretation of chromatograms.

12.6 If the response for a peak exceeds the working range of the system, dilute the extract and reanalyze.

12.7 If the measurement of the peak response is prevented by the presence of interferences, further cleanup is required.

13. Calculations

13.1 Determine the concentration of individual compounds in the sample.

13.1.1 If the external standard calibration procedure is used, calculate the amount of material injected from the peak response using the calibration curve or calibration factor determined in Section 7.2.2. The concentration in the sample can be calculated from Equation 2.

$$\text{Concentration } (\mu\text{g/L}) = \frac{(\text{A})(\text{V}_\text{t})}{(\text{V}_\text{i})(\text{V}_\text{s})}$$

Equation 2

where:

A=Amount of material injected (ng).

V_i=Volume of extract injected (µL).

V_t=Volume of total extract (µL).

V_s=Volume of water extracted (mL).

13.1.2 If the internal standard calibration procedure is used, calculate the concentration in the sample using the response factor (RF) determined in Section 7.3.2 and Equation 3.

$$\text{Concentration } (\mu\text{g/L}) = \frac{(\text{A}_\text{s})(\text{I}_\text{s})}{(\text{A}_\text{is})(\text{RF})(\text{V}_\text{o})}$$

Equation 3

where:

A_s=Response for the parameter to be measured.

A_{is}=Response for the internal standard.

I_s=Amount of internal standard added to each extract (µg).

V_o=Volume of water extracted (L).

13.2 Report results in µg/L without correction for recovery data. All QC data obtained should be reported with the sample results.

14. Method Performance

14.1 The method detection limit (MDL) is defined as the minimum concentration of a substance that can be measured and reported with 99% confidence that the value is above zero.[1] The MDL concentrations listed in Table 1 were obtained using reagent water.[10] Similar results were achieved using representative wastewaters. The MDL actually achieved in a given analysis will vary depending on instrument sensitivity and matrix effects.

14.2 This method has been tested for linearity of spike recovery from reagent water and has been demonstrated to be applicable over the concentration range from 4×MDL to 1000×MDL.[10]

14.3 This method was tested by 20 laboratories using reagent water, drinking water, surface water, and three industrial wastewaters spiked at six concentrations over the range 1.0 to 356 µg/L.[11] Single operator precision, overall precision, and method accuracy were found to be directly related to the concentration of the parameter and essentially independent of the sample matrix. Linear equations to describe these relationships are presented in Table 3.

REFERENCES

1. 40 CFR part 136, appendix B.

2. ''Determination of Chlorinated Hydrocarbons In Industrial and Municipal Wastewaters, ''EPA 6090/4–84–ABC, National Technical Information Service, PBXYZ, Springfield, Virginia, 22161 November 1984.

3. ASTM Annual Book of Standards, Part 31, D3694–78. ''Standard Practices for Preparation of Sample Containers and for Preservation of Organic Constituents,'' American

Society for Testing and Materials, Philadelphia.

4. ''Carcinogens—Working With Carcinogens,'' Department of Health, Education, and Welfare, Public Health Service, Center for Disease Control, National Institute for Occupational Safety and Health, Publication No. 77–206, August 1977.

5. ''OSHA Safety and Health Standards, General Industry,'' (29 CFR part 1910), Occupational Safety and Health Administration, OSHA 2206 (Revised, January 1976).

6. ''Safety in Academic Chemistry Laboratories,'' American Chemical Society Publication, Committee on Chemical Safety, 3rd Edition, 1979.

7. Provost, L.P., and Elder, R.S. ''Interpretation of Percent Recovery Data,''*American Laboratory*, *15*, 58–63 (1983). (The value 2.44 used in the equation in Section 8.3.3 is two times the value 1.22 derived in this report.)

8. ASTM Annual Book of Standards, Part 31, D3370–76. ''Standard Practices for Sampling Water,'' American Society for Testing and Materials, Philadelphia.

9. Burke, J.A. ''Gas Chromatography for Pesticide Residue Analysis; Some Practical Aspects,'' *Journal of the Association of Official Analytical Chemists*, *48*, 1037 (1965).

10. ''Development of Detection Limits, EPA Method 612, Chlorinated Hydrocarbons,'' Special letter report for EPA Contract 68–03–2625, U.S. Environmental Protection Agency, Environmental Monitoring and Support Laboratory, Cincinnati, Ohio 45268.

11. ''EPA Method Study Method 612—Chlorinated Hydrocarbons,'' EPA 600/4–84–039, National Technical Information Service, PB84–187772, Springfield, Virginia 22161, May 1984.

12. ''Method Performance for Hexachlorocyclopentadiene by Method 612,'' Memorandum from R. Slater, U.S. Environmental Protection Agency, Environmental Monitoring and Support Laboratory, Cincinnati, Ohio 45268, December 7, 1983.

TABLE 1—CHROMATOGRAPHIC CONDITIONS AND METHOD DETECTION LIMITS

Parameter	Retention time (min)		Method detection limit (µg/L)
	Column 1	Column 2	
1,3-Dichlorobenzene	4.5	6.8	1.19
Hexachloroethane	4.9	8.3	0.03
1,4-Dichlorobenzene	5.2	7.6	1.34
1,2-Dichlorobenzene	6.6	9.3	1.14
Hexachlorobutadiene	7.7	20.0	0.34
1,2,4-Trichlorobenzene	15.5	22.3	0.05
Hexachlorocyclopentadiene	nd	[c]16.5	0.40
2-Chloronaphthalene	[a]2.7	[b]3.6	0.94
Hexachlorobenzene	[a]5.6	[b]10.1	0.05

Column 1 conditions: Supelcoport (100/120 mesh) coated with 1% SP–1000 packed in a 1.8 m × 2 mm ID glass column with 5% methane/95% argon carrier gas at 25 mL/min. flow rate. Column temperature held isothermal at 65 °C, except where otherwise indicated.

Column 2 conditions: Supelcoport (80/100 mesh) coated with 1.5% OV–1/2.4% OV–225 packed in a 1.8 m × 2 mm ID glass column with 5% methane/95% argon carrier gas at 25 mL/min. flow rate. Column temperature held isothermal at 75 °C, except where otherwise indicated.

nd=Not determined.

[a] 150 °C column temperature.

[b] 165 °C column temperature.

[c] 100 °C column temperature.

TABLE 2—QC ACCEPTANCE CRITERIA—METHOD 612

Parameter	Test conc. (µg/L)	Limit for s (µg/L)	Range for $\bar{X}$ (µg/L)	Range for P, P_s (percent)
2-Chloronaphthalene	100	37.3	29.5–126.9	9–148
1,2-Dichlorobenzene	100	28.3	23.5–145.1	9–160
1,3-Dichlorobenzene	100	26.4	7.2–138.6	D–150
1,4-Dichlorobenzene	100	20.8	22.7–126.9	13–137
Hexachlorobenzene	10	2.4	2.6–14.8	15–159
Hexachlorobutadiene	10	2.2	D–12.7	D–139
Hexachlorocyclopentadiene	10	2.5	D–10.4	D–111
Hexachloroethane	10	3.3	2.4–12.3	8–139
1,2,4-Trichlorobenzene	100	31.6	20.2–133.7	5–149

s=Standard deviation of four recovery measurements, in µg/L (Section 8.2.4).

$\bar{X}$=Average recovery for four recovery measurements, in µg/L (Section 8.2.4).

P, P_s=Percent recovery measured (Section 8.3.2, Section 8.4.2).

D=Detected; result must be greater than zero.

NOTE: These criteria are based directly upon the method performance data in Table 3. Where necessary, the limits for recovery have been broadened to assure applicability of the limits to concentrations below those used to develop Table 3.

TABLE 3—METHOD ACCURACY AND PRECISION AS FUNCTIONS OF CONCENTRATION—METHOD 612

Parameter	Acccuracy, as recovery, X' (µg/L)	Single analyst precision, s_r' (µg/L)	Overall precision, S' (µg/L)
2-Chloronaphthalene	$0.75C+3.21$	$0.28\bar{X}-1.17$	$0.38\bar{X}-1.39$
1,2-Dichlorobenzene	$0.85C-0.70$	$0.22\bar{X}-2.95$	$0.41\bar{X}-3.92$
1,3-Dichlorobenzene	$0.72C+0.87$	$0.21\bar{X}-1.03$	$0.49\bar{X}-3.98$
1,4-Dichlorobenzene	$0.72C+2.80$	$0.16\bar{X}-0.48$	$0.35\bar{X}-0.57$
Hexachlorobenzene	$0.87C-0.02$	$0.14\bar{X}+0.07$	$0.36\bar{X}-0.19$
Hexachlorobutadiene	$0.61C+0.03$	$0.18\bar{X}+0.08$	$0.53\bar{X}-0.12$
Hexachlorocyclopentadiene[a]	$0.47C$	$0.24\bar{X}$	$0.50\bar{X}$
Hexachloroethane	$0.74C-0.02$	$0.23\bar{X}+0.07$	$0.36\bar{X}-0.00$
1,2,4-Trichlorobenzene	$0.76C+0.98$	$0.23\bar{X}-0.44$	$0.40\bar{X}-1.37$

X'=Expected recovery for one or more measurements of a sample containing a concentration of C, in µg/L.
s_r'=Expected single analyst standard deviation of measurements at an average concentration found of $\bar{X}$, in µg/L.
S'=Expected interlaboratory standard deviation of measurements at an average concentration found of $\bar{X}$, in µg/L.
C=True value for the concentration, in µg/L.
$\bar{X}$=Average recovery found for measurements of samples containing a concentration of C, in µg/L.

[a] Estimates based upon the performance in a single laboratory.[12]

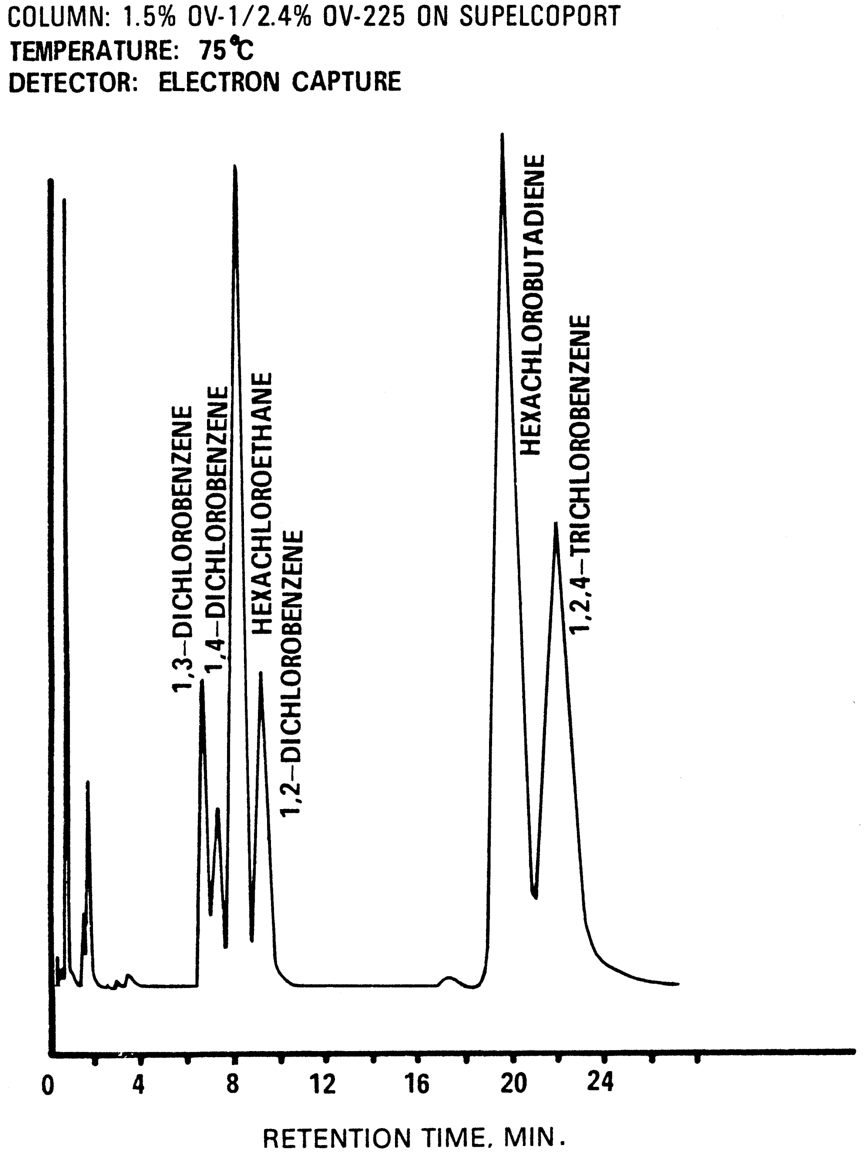

Figure 1. Gas chromatogram of chlorinated hydrocarbons.

COLUMN: 1.5% OV-1/2.4% OV-225 ON SUPELCOPORT
TEMPERATURE: 165°C
DETECTOR: ELECTRON CAPTURE

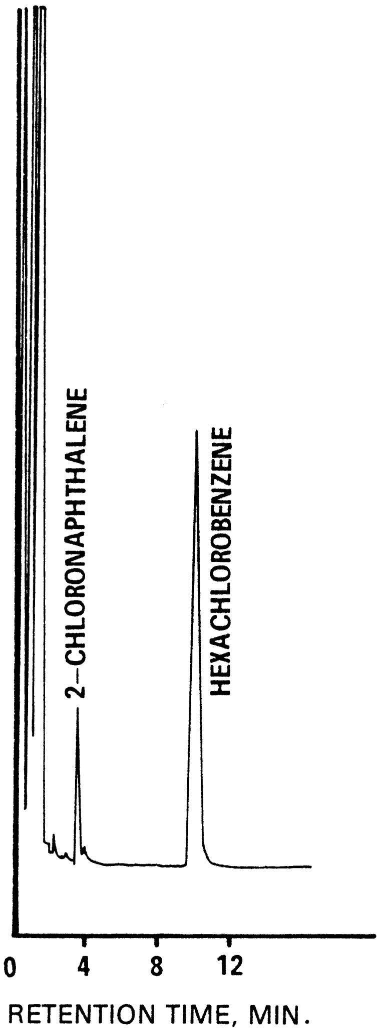

Figure 2. Gas chromatogram of chlorinated hydrocarbons.

METHOD 613—2,3,7,8-TETRACHLORODIBENZO-P-DIOXIN

1. Scope and Application

1.1 This method covers the determination of 2,3,7,8-tetrachlorodibenzo-p-dioxin (2,3,7,8-TCDD). The following parameter may be determined by this method:

Parameter	STORET No.	GAS No.
2,3,7,8-TCDD	34675	1746–01–6

1.2 This is a gas chromatographic/mass spectrometer (GC/MS) method applicable to the determination of 2,3,7,8–TCDD in municipal and industrial discharges as provided under 40 CFR 136.1. Method 625 may be used to screen samples for 2,3,7,8–TCDD. When the screening test is positive, the final qualitative confirmation and quantification must be made using Method 613.

1.3 The method detection limit (MDL, defined in Section 14.1)[1] for 2,3,7,8–TCDD is listed in Table 1. The MDL for a specific wastewater may be different from that listed, depending upon the nature of interferences in the sample matrix.

1.4 Because of the extreme toxicity of this compound, the analyst must prevent exposure to himself, of to others, by materials knows or believed to contain 2,3,7,8–TCDD. Section 4 of this method contains guidelines and protocols that serve as minimum safe-handling standards in a limited-access laboratory.

1.5 Any modification of this method, beyond those expressly permitted, shall be considered as a major modification subject to application and approval of alternate test procedures under 40 CFR 136.4 and 136.5.

1.6 This method is restricted to use by or under the supervision of analysts experienced in the use of a gas chromatograph/ mass spectrometer and in the interpretation of mass spectra. Each analyst must demonstrate the ability to generate acceptable results with this method using the procedure described in Section 8.2.

2. Summary of Method

2.1 A measured volume of sample, approximately 1–L, is spiked with an internal standard of labeled 2,3,7,8–TCDD and extracted with methylene chloride using a separatory funnel. The methylene chloride extract is exchanged to hexane during concentration to a volume of 1.0 mL or less. The extract is then analyzed by capillary column GC/MS to separate and measure 2,3,7,8–TCDD.[2,3]

2.2 The method provides selected column chromatographic cleanup proceudres to aid in the elimination of interferences that may be encountered.

3. Interferences

3.1 Method interferences may be caused by contaminants in solvents, reagents, glassware, and other sample processing hardware that lead to discrete artifacts and/or elevated backgrounds at the masses (m/z) monitored. All of these materials must be routinely demonstrated to be free from interferences under the conditions of the analysis by running laboratory reagent blanks as described in Section 8.1.3.

3.1.1 Glassware must be scrupulously cleaned.[4] Clean all glassware as soon as possible after use by rinsing with the last solvent used in it. Solvent rinsing should be followed by detergent washing with hot water, and rinses with tap water and distilled water. The glassware should then be drained dry, and heated in a muffle furnace at 400 °C for 15 to 30 min. Some thermally stable materials, such as PCBs, may not be eliminated by the treatment. Solvent rinses with acetone and pesticide quality hexane may be substituted for the muffle furnace heating. Thorough rinsing with such solvents usually eliminates PCB interference. Volumetric ware should not be heated in a muffle furnace. After drying and cooling, glassware should be sealed and stored in a clean environment to prevent any accumulation of dust or other contaminants. Store inverted or capped with aluminum foil.

3.1.2 The use of high purity reagents and solvents helps to mininmize interference problems. Purification of solvents by distillation in all-glass systems may be required.

3.2 Matrix interferences may be caused by contaminants that are coextracted from the sample. The extent of matrix interferences will vary considerably from source to source, depending upon the nature and diversity of the industrial complex or municipality being sampled. 2,3,7,8–TCDD is often associated with other interfering chlorinated compounds which are at concentrations several magnitudes higher than that of 2,3,7,8–TCDD. The cleanup producers in Section 11 can be used to overcome many of these interferences, but unique samples may require additional cleanup approaches[1,5M7] to eliminate false positives and achieve the MDL listed in Table 1.

3.3 The primary column, SP–2330 or equivalent, resolves 2,3,7,8–TCDD from the other 21 TCDD insomers. Positive results using any other gas chromatographic column must be confirmed using the primary column.

4. Safety

4.1 The toxicity or carcinogenicity of each reagent used in this method has not been precisely defined; however, each chemical compound should be treated as a potential health hazard. From this viewpoint, exposure to these chemicals must be reduced to the lowest possible level by whatever means available. The laboratory is responsible for maintaining a current awareness file of OSHA regulations regarding the safe handling of the chemicals specified in this method. A reference file of material data handling sheets should also be made available to all personnel involved in the chemical analysis. Additional references to laboratory safety are available and have been identified[8-10] for the information of the analyst. Benzene and 2,3,7,8–TCDD have been identified as suspected human or mammalian carcinogens.

4.2 Each laboratory must develop a strict safety program for handling 2,3,7,8–TCDD. The following laboratory practices are recommended:

4.2.1 Contamination of the laboratory will be minimized by conducting all manipulations in a hood.

4.2.2 The effluents of sample splitters for the gas chromatograph and roughing pumps on the GC/MS should pass through either a column of activated charcoal or be bubbled through a trap containing oil or high-boiling alcohols.

4.2.3 Liquid waste should be dissolved in methanol or ethanol and irradiated with ultraviolet light with a wavelength greater than 290 nm for several days. (Use F 40 BL lamps or equivalent). Analyze liquid wastes and dispose of the solutions when 2,3,7,8–TCDD can no longer be detected.

4.3 Dow Chemical U.S.A. has issued the following precautimns (revised November 1978) for safe handling of 2,3,7,8–TCDD in the laboratory:

4.3.1 The following statements on safe handling are as complete as possible on the basis of available toxicological information. The precautions for safe handling and use are necessarily general in nature since detailed, specific recommendations can be made only for the particular exposure and circumstances of each individual use. Inquiries about specific operations or uses may be addressed to the Dow Chemical Company. Assistance in evaluating the health hazards of particular plant conditions may be obtained from certain consulting laboratories and from State Departments of Health or of Labor, many of which have an industrial health service. 2,3,7,8–TCDD is extremely toxic to laboratory animals. However, it has been handled for years without injury in analytical and biological laboratories. Techniques used in handling radioactive and infectious materials are applicable to 2,3,7,8,–TCDD.

4.3.1.1 Protective equipment—Throw-away plastic gloves, apron or lab coat, safety glasses, and a lab hood adequate for radioactive work.

4.3.1.2 Training—Workers must be trained in the proper method of removing contaminated gloves and clothing without contacting the exterior surfaces.

4.3.1.3 Personal hygiene—Thorough washing of hands and forearms after each manipulation and before breaks (coffee, lunch, and shift).

4.3.1.4 Confinement—Isolated work area, posted with signs, segregated glassware and tools, plastic-backed absorbent paper on benchtops.

4.3.1.5 Waste—Good technique includes minimizing contaminated waste. Plastic bag liners should be used in waste cans. Janitors must be trained in the safe handling of waste.

4.3.1.6 Disposal of wastes—2,3,7,8–TCDD decomposes above 800 °C. Low-level waste such as absorbent paper, tissues, animal remains, and plastic gloves may be burned in a good incinerator. Gross quantities (milligrams) should be packaged securely and disposed through commercial or governmental channels which are capable of handling high-level radioactive wastes or extremely toxic wastes. Liquids should be allowed to evaporate in a good hood and in a disposable container. Residues may then be handled as above.

4.3.1.7 Decontamination—For personal decontamination, use any mild soap with plenty of scrubbing action. For decontamination of glassware, tools, and surfaces, Chlorothene NU Solvent (Trademark of the Dow Chemical Company) is the least toxic solvent shown to be effective. Satisfactory cleaning may be accomplished by rinsing with Chlorothene, then washing with any detergent and water. Dishwater may be disposed to the sewer. It is prudent to minimize solvent wastes because they may require special disposal through commercial sources which are expensive.

4.3.1.8 Laundry—Clothing known to be contaminated should be disposed with the precautions described under Section 4.3.1.6. Lab coats or other clothing worn in 2,3,7,8–TCDD work areas may be laundered.

Clothing should be collected in plastic bags. Persons who convey the bags and launder the clothing should be advised of the hazard and trained in proper handling. The clothing may be put into a washer without contact if the launderer knows the problem. The washer should be run through a cycle before being used again for other clothing.

4.3.1.9 Wipe tests—A useful method of determining cleanliness of work surfaces and tools is to wipe the surface with a piece of filter paper. Extraction and analysis by gas chromatography can achieve a limit of sensitivity of 0.1 µg per wipe. Less than 1 µg of 2,3,7,8–TCDD per sample indicates acceptable cleanliness; anything higher warrants further cleaning. More than 10 µg on a wipe sample constitutes an acute hazard and requires prompt cleaning before further use of the equipment or work space. A high (>10 µg)

2,3,7,8–TCDD level indicates that unacceptable work practices have been employed in the past.

4.3.1.10 Inhalation—Any procedure that may produce airborne contamination must be done with good ventilation. Gross losses to a ventilation system must not be allowed. Handling of the dilute solutions normally used in analytical and animal work presents no inhalation hazards except in the case of an accident.

4.3.1.11 Accidents—Remove contaminated clothing immediately, taking precautions not to contaminate skin or other articles. Wash exposed skin vigorously and repeatedly until medical attention is obtained.

5. Apparatus and Materials

5.1 Sampling equipment, for discrete or composite sampling.

5.1.1 Grab sample bottle—1–L or 1-qt, amber glass, fitted with a screw cap lined with Teflon. Foil may be substituted for Teflon if the sample is not corrosive. If amber bottles are not available, protect samples from light. The bottle and cap liner must be washed, rinsed with acetone or methylene chloride, and dried before use to minimize contamination.

5.1.2 Automatic sampler (optional)—The sampler must incorporate glass sample containers for the collection of a minimum of 250 mL of sample. Sample containers must be kept refrigerated at 4 °C and protected from light during compositing. If the sampler uses a peristaltic pump, a minimum length of compressible silicone rubber tubing may be used. Before use, however, the compressible tubing should be thoroughly rinsed with methanol, followed by repeated rinsings with distilled water to minimize the potential for contamination of the sample. An integrating flow meter is required to collect flow proportional composites.

5.1.3 Clearly label all samples as ''POISON'' and ship according to U.S. Department of Transportation regulations.

5.2 Glassware (All specifications are suggested. Catalog numbers are included for illustration only.):

5.2.1 Separatory funnels—2–L and 125-mL, with Teflon stopcock.

5.2.2 Concentrator tube, Kuderna-Danish—10-mL, graduated (Kontes K–570050–1025 or equivalent). Calibration must be checked at the volumes employed in the test. Ground glass stopper is used to prevent evaporation of extracts.

5.2.3 Evaporative flask, Kuderna-Danish—500–mL (Kontes K–570001–0500 or equivalent). Attach to concentrator tube with springs.

5.2.4 Snyder column, Kuderna-Danish—Three-ball macro (Kontes K–503000–0121 or equivalent).

5.2.5 Snyder column, Kuderna-Danish—Two-ball micro (Kontes K–569001–0219 or equivalent).

5.2.6 Vials—10 to 15–mL, amber glass, with Teflon-lined screw cap.

5.2.7 Chromatographic column—300 mm long × 10 mm ID, with Teflon stopcock and coarse frit filter disc at bottom.

5.2.8 Chromatographic column—400 mm long × 11 mm ID, with Teflon stopcock and coarse frit filter disc at bottom.

5.3 Boiling chips—Approximately 10/40 mesh. Heat to 400 °C for 30 min or Soxhlet extract with methylene chloride.

5.4 Water bath—Heated, with concentric ring cover, capable of temperature control (±2 °C). The bath should be used in a hood.

5.5 GC/MS system:

5.5.1 Gas chromatograph—An analytical system complete with a temperature programmable gas chromatograph and all required accessories including syringes, analytical columns, and gases. The injection port must be designed for capillary columns. Either split, splitless, or on-column injection techniques may be employed, as long as the requirements of Section 7.1.1 are achieved.

5.5.2 Column—60 m long × 0.25 mm ID glass or fused silica, coated with SP–2330 (or equivalent) with a film thickness of 0.2 µm. Any equivalent column must resolve 2, 3, 7, 8–TCDD from the other 21 TCDD isomers.[16]

5.5.3 Mass spectrometer—Either a low resolution mass spectrometer (LRMS) or a high resolution mass spectrometer (HRMS) may be used. The mass spectrometer must be equipped with a 70 V (nominal) ion source and be capable of aquiring m/z abundance data in real time selected ion monitoring (SIM) for groups of four or more masses.

5.5.4 GC/MS interface—Any GC to MS interface can be used that achieves the requirements of Section 7.1.1. GC to MS interfaces constructed of all glass or glass-lined materials are recommended. Glass surfaces can be deactivated by silanizing with dichlorodimethylsilane. To achieve maximum sensitivity, the exit end of the capillary column should be placed in the ion source. A short piece of fused silica capillary can be used as the interface to overcome problems associated with straightening the exit end of glass capillary columns.

5.5.5 The SIM data acquired during the chromatographic program is defined as the Selected Ion Current Profile (SICP). The SICP can be acquired under computer control or as a real time analog output. If computer control is used, there must be software available to plot the SICP and report peak height or area data for any m/z in the SICP between specified time or scan number limits.

5.6 Balance—Analytical, capable of accurately weighing 0.0001 g.

6. Reagents

6.1 Reagent water—Reagent water is defined as a water in which an interferent is not observed at the MDL of 2, 3, 7, 8–TCDD.

6.2 Sodium hydroxide solution (10 N)—Dissolve 40 g of NaOH (ACS) in reagent water and dilute to 100 mL. Wash the solution with methylene chloride and hexane before use.

6.3 Sodium thiosulfate—(ACS) Granular.

6.4 Sulfuric acid—Concentrated (ACS, sp. gr. 1.84).

6.5 Acetone, methylene chloride, hexane, benzene, ortho-xylene, tetradecane—Pesticide quality or equivalent.

6.6 Sodium sulfate—(ACS) Granular, anhydrous. Purify by heating at 400 °C for 4 h in a shallow tray.

6.7 Alumina—Neutral, 80/200 mesh (Fisher Scientific Co., No. A–540 or equivalent). Before use, activate for 24 h at 130 °C in a foil-covered glass container.

6.8 Silica gel—High purity grade, 100/120 mesh (Fisher Scientific Co., No. S–679 or equivalent).

6.9 Stock standard solutions (1.00 μg/μL)—Stock standard solutimns can be prepared from pure standard materials or purchased as certified solutions. Acetone should be used as the solvent for spiking solutions; ortho-xylene is recommended for calibration standards for split injectors; and tetradecane is recommended for splitless or on-colum injectors. Analyze stock internal standards to verify the absence of native 2,3,7,8–TCDD.

6.9.1 Prepare stock standard solutions of 2,3,7,8–TCDD (mol wt 320) and either $^{37}Cl_4$ 2,3,7,8–TCDD (mol wt 328) or $^{13}Cl_{12}$ 2,3,7,8–TCDD (mol wt 332) in an isolated area by accurately weighing about 0.0100 g of pure material. Dissolve the material in pesticide quality solvent and dilute to volume in a 10-mL volumetric flask. When compound purity is assayed to be 96% or greater, the weight can be used without correction to calculate the concentration of the stock standard. Commercially prepared stock standards can be used at any concentration if they are certified by the manufacturer or by an independent source.

6.9.2 Transfer the stock standard solutions into Teflon-sealed screw-cap bottles. Store in an isolated refrigerator protected from light. Stock standard solutions should be checked frequently for signs of degradation or evaporation, especially just prior to preparing calibration standards or spiking solutions from them.

6.9.3 Stock standard solutions must be replaced after six months, or sooner if comparison with check standards indicates a problem.

6.10 Internal standard spiking solution (25 ng/mL)—Using stock standard solution, prepare a spiking solution in acetone of either $^{13}Cl_{12}$ or $^{37}Cl_4$ 2,3,7,8–TCDD at a concentration of 25 ng/mL. (See Section 10.2)

6.11 Quality control check sample concentrate—See Section 8.2.1.

7. *Calibration*

7.1 Establish gas chromatograhic operating conditions equivalent to those given in Table 1 and SIM conditions for the mass spectrometer as described in Section 12.2 The GC/MS system must be calibrated using the internal standard technique.

7.1.1 Using stock standards, prepare calibration standards that will allow measurement of relative response factors of at least three concentration ratios of 2,3,7,8–TCDD to internal standard. Each calibration standard must be prepared to contain the internal standard at a concentration of 25 ng/mL. If any interferences are contributed by the internal standard at m/z 320 and 322, its concentration may be reduced in the calibration standards and in the internal standard spiking solution (Section 6.10). One of the calibration standards should contain 2,3,7,8–TCDD at a concentration near, but above, the MDL and the other 2,3,7,8–TCDD concentrations should correspond to the expected range of concentrations found in real samples or should define the working range of the GC/MS system.

7.1.2 Using injections of 2 to 5 μL, analyze each calibration standardaccording to Section 12 and tabulate peak height or area response against the concentration of 2,3,7,8–TCDD and internal standard. Calculate response factors (RF) for 2,3,7,8–TCDD using Equation 1.

$$RF = \frac{(A_s)(C_{is})}{(A_{is})(C_s)}$$

Equation 1

where:

A_s=SIM response for 2,3,7,8–TCDD m/z 320.

A_{is}=SIM response for the internal standard, m/z 332 for $^{13}C_{12}$ 2,3,7,8–TCDD m/z 328 for $^{37}Cl_4$ 2,3,7,8–TCDD.

C_{is}=Concentration of the internal standard (μg/L).

C_s=Concentration of 2,3,7,8–TCDD (μg/L).

If the RF value over the working range is a constant (<10% relative standard deviation, RSD), the RF can be assumed to be invariant and the average RF can be used for calculations. Alternatively, the results can be used to plot a calibration curve of response ratios, A_s/A_{is}, vs. RF.

7.1.3 The working calibration curve or RF must be verified on each working day by the measurement of one or more 2,3,7,8–TCDD calibration standards. If the response for 2,3,7,8–TCDD varies from the predicted response by more than ±15%, the test must be repeated using a fresh calibration standard. Alternatively, a new calibration curve must be prepared.

7.2 Before using any cleanup procedure, the analyst must process a series of calibration standards through the procedure to validate elution patterns and the absence of interferences from the reagents.

8. Quality Control

8.1 Each laboratory that uses this method is required to operate a formal quality control program. The minimum requirements of this program consist of an initial demonstration of laboratory capability and an ongoing analysis of spiked samples to evaluate and document data quality. The laboratory must maintain records to document the quality of data that is generated. Ongoing data quality checks are compared with established performance criteria to determine if the results of analyses meet the performance characteristics of the method. When results of sample spikes indicate atypical method performance, a quality control check standard must be analyzed to confirm that the measurements were performed in an in-control mode of operation.

8.1.1 The analyst must make an initial, one-time, demonstration of the ability to generate acceptable accuracy and precision with this method. This ability is established as described in Section 8.2.

8.1.2 In recognition of advances that are occurring in chromatography, the analyst is permitted certain options (detailed in Sections 10.5, 11.1, and 12.1) to improve the separations or lower the cost of measurements. Each time such a modification is made to the method, the analyst is required to repeat the procedure in Section 8.2

8.1.3 Before processing any samples, the analyst must analyze a reagent water blank to demonstrate that interferences from the analytical system and glassware are under control. Each time a set of samples is extracted or reagents are changed, a reagent water blank must be processed as a safeguard against laboratory contamination.

8.1.4 The laboratory must, on an ongoing basis, spike and analyze a minimum of 10% of all samples with native 2,3,7,8–TCDD to monitor and evaluate laboratory data quality. This procedure is described in Section 8.3.

8.1.5 The laboratory must, on an ongoing basis, demonstrate through the analyses of quality control check standards that the operation of the measurement system is in control. This procedure is described in Section 8.4. The frequency of the check standard analyses is equivalent to 10% of all samples analyzed but may be reduced if spike recoveries from samples (Section 8.3) meet all specified quality control criteria.

8.1.6 The laboratory must maintain performance records to document the quality of data that is generated. This procedure is described in Section 8.5.

8.2 To establish the ability to generate acceptable accuracy and precision, the analyst must perform the following operations.

8.2.1 A quality control (QC) check sample concentrate is required containing 2,3,7,8–TCDD at a concentration of 0.100 µg/mL in acetone. The QC check sample concentrate must be obtained from the U.S. Environmental Protection Agency, Environmental Monitoring and Support Laboratory in Cincinnati, Ohio, if available. If not available from that source, the QC check sample concentrate must be obtained from another external source. If not available from either source above, the QC check sample concentrate must be prepared by the laboratory using stock standards prepared independently from those used for calibration.

8.2.2 Using a pipet, prepare QC check samples at a concentration of 0.100 µg/L (100 ng/L) by adding 1.00 mL of QC check sample concentrate to each of four 1–L aliquots of reagent water.

8.2.3 Analyze the well-mixed QC check samples according to the method beginning in Section 10.

8.2.4 Calculate the average recovery ($\bar{X}$) in µg/L, and the standard deviation of the recovery (s) in µg/L, for 2,3,7,8–TCDD using the four results.

8.2.5 Compare s and ($\bar{X}$) with the corresponding acceptance criteria for precision and accuracy, respectively, found in Table 2. If s and $\bar{X}$ meet the acceptance criteria, the system performance is acceptable and analysis of actual samples can begin. If s exceeds the precision limit or $\bar{X}$ falls outside the range for accuracy, the system performance is unacceptable for 2,3,7,8–TCDD. Locate and correct the source of the problem and repeat the test beginning with Section 8.2.2.

8.3 The laboratory must, on an ongoing basis, spike at least 10% of the samples from each sample site being monitored to assess accuracy. For laboratories analyzing one to ten samples per month, at least one spiked sample per month is required.

8.3.1 The concentration of the spike in the sample should be determined as follows:

8.3.1.1 If, as in compliance monitoring, the concentration of 2,3,7,8–TCDD in the sample is being checked against a regulatory concentration limit, the spike should be at that limit or 1 to 5 times higher than the background concentration determined in Section 8.3.2, whichever concentration would be larger.

8.3.1.2 If the concentration of 2,3,7,8–TCDD in the sample is not being checked against a limit specific to that parameter, the spike should be at 0.100 µg/L or 1 to 5 times higher than the background concentration determined in Section 8.3.2, whichever concentration would be larger.

8.3.1.3 If it is impractical to determine background levels before spiking (e.g., maximum holding times will be exceeded), the spike concentration should be (1) the regulatory concentration limit, if any; or, if none (2) the larger of either 5 times higher than the expected background concentration or 0.100 μg/L.

8.3.2 Analyze one sample aliquot to determine the background concentration (B) of 2,3,7,8–TCDD. If necessary, prepare a new QC check sample concentrate (Section 8.2.1) appropriate for the background concentration in the sample. Spike a second sample aliquot with 1.0 mL of the QC check sample concentrate and analyze it to determine the concentration after spiking (A) of 2,3,7,8–TCDD. Calculate percent recovery (P) as $100(A-B)\%T$, where T is the known true value of the spike.

8.3.3 Compare the percent recovery (P) for 2,3,7,8–TCDD with the corresponding QC acceptance criteria found in Table 2. These acceptance criteria were calculated to include an allowance for error in measurement of both the background and spike concentrations, assuming a spike to background ratio of 5:1. This error will be accounted for to the extent that the analyst's spike to background ratio approaches 5:1.[11] If spiking was performed at a concentration lower than 0.100 μg/L, the analyst must use either the QC acceptance criteria in Table 2, or optional QC acceptance criteria calculated for the specific spike concentration. To calculate optional acceptance criteria for the recovery of 2,3,7,8–TCDD: (1) Calculate accuracy (X') using the equation in Table 3, substituting the spike concentration (T) for C; (2) calculate overall precision (S') using the equation in Table 3, substituting X' for X; (3) calculate the range for recovery at the spike concentration as $(100\ X'/T) \pm 2.44(100\ S'/T)\%$.[11]

8.3.4 If the recovery of 2,3,7,8–TCDD falls outside the designated range for recovery, a check standard must be analyzed as described in Section 8.4.

8.4 If the recovery of 2,3,7,8–TCDD fails the acceptance criteria for recovery in Section 8.3, a QC check standard must be prepared and analyzed.

NOTE: The frequency for the required analysis of a QC check standard will depend upon the complexity of the sample matrix and the performance of the laboratory.

8.4.1 Prepare the QC check standard by adding 1.0 mL of QC check sample concentrate (Section 8.2.1 or 8.3.2) to 1 L of reagent water.

8.4.2 Analyze the QC check standard to determine the concentration measured (A) of 2,3,7,8–TCDD. Calculate the percent recovery (P_s) as 100 (A/T)%, where T is the true value of the standard concentration.

8.4.3 Compare the percent recovery (P_s) with the corresponding QC acceptance criteria found in Table 2. If the recovery of 2,3,7,8–TCDD falls outside the designated range, the laboratory performance is judged to be out of control, and the problem must be immediately identified and corrected. The analytical result for 2,3,7,8–TCDD in the unspiked sample is suspect and may not be reported for regulatory compliance purposes.

8.5 As part of the QC program for the laboratory, method accuracy for wastewater samples must be assessed and records must be maintained. After the analysis of five spiked wastewater samples as in Section 8.3, calculate the average percent recovery ($\bar{P}$) and the spandard deviation of the percent recovery (s_p). Express the accuracy assessment as a percent recovery interval from $\bar{P}-2s_p$ to $\bar{P}+2s_p$. If $\bar{P}$=90% and s_p=10%, for example, the accuracy interval is expressed as 70–110%. Update the accuracy assessment on a regular basis (e.g. after each five to ten new accuracy measurements).

8.6 It is recommended that the laboratory adopt additional quality assurance practices for use with this method. The specific practices that are most productive depend upon the needs of the laboratory and the nature of the samples. Field duplicates may be analyzed to assess the precision of the environmental measurements. Whenever possible, the laboratory should analyze standard reference materials and participate in relevant performance evaluation studies.

9. Sample Collection, Preservation, and Handling

9.1 Grab samples must be collected in glass containers. Conventional sampling practices[12] should be followed, except that the bottle must not be prerinsed with sample before collection. Composite samples should be collected in refrigerated glass containers in accordance with the requirements of the program. Automatic sampling equipment must be as free as possible of Tygon tubing and other potential sources of contamination.

9.2 All samples must be iced or refrigerated at 4 °C and protected from light from the time of collection until extraction. Fill the sample bottles and, if residual chlorine is present, add 80 mg of sodium thiosulfate per liter of sample and mix well. EPA Methods 330.4 and 330.5 may be used for measurement of residual chlorine.[13] Field test kits are available for this purpose.

9.3 Label all samples and containers ''POISON'' and ship according to applicable U.S. Department of Transportation regulations.

9.4 All samples must be extracted within 7 days of collection and completely analyzed within 40 days of extraction.[2]

10. Sample Extraction

CAUTION: When using this method to analyze for 2,3,7,8–TCDD, all of the following operations must be performed in a limited-access laboratory with the analyst wearing full protective covering for all exposed skin surfaces. See Section 4.2.

10.1 Mark the water meniscus on the side of the sample bottle for later determination of sample volume. Pour the entire sample into a 2–L separatory funnel.

10.2 Add 1.00 mL of internal standard spiking solution to the sample in the separatory funnel. If the final extract will be concentrated to a fixed volume below 1.00 mL (Section 12.3), only that volume of spiking solution should be added to the sample so that the final extract will contain 25 ng/mL of internal standard at the time of analysis.

10.3 Add 60 mL of methylene chloride to the sample bottle, seal, and shake 30 s to rinse the inner surface. Transfer the solvent to the separatory funnel and extract the sample by shaking the funnel for 2 min. with periodic venting to release excess pressure. Allow the organic layer to separate from the water phase for a minimum of 10 min. If the emulsion interface between layers is more than one-third the vmlume of the solvent layer, the analyst must employ mechanical techniques to complete the phase separation. The optimum technique depends upon the sample, but may include stirring, filtration of the emulsion through glass wool, centrifugation, or other physical methods. Collect the methylene chloride extract in a 250-mL Erlenmeyer flask.

10.4 Add a second 60-mL volume of methylene chloride to the sample bottle and repeat the extraction procedure a second time, combining the extracts in the Erlenmeyer flask. Perform a third extraction in the same manner.

10.5 Assemble a Kuderna-Danish (K-D) concentrator by attaching a 10-mL concentrator tube to a 500-mL evaporative flask. Other concentration devices or techniques may be used in place of the K-D concentrator if the requirements of Section 8.2 are met.

10.6 Pour the combined extract into the K-D concentrator. Rinse the Erlenmeyer flask with 20 to 30 mL of methylele chloride to complete the quantitative transfer.

10.7 Add one or two clean boiling chips to the evaporative flask and attach a three-ball Snyder column. Prewet the Snyder column by adding about 1 mL of methylene chloride to the top. Place the K-D apparatus on a hot water bath (60 to 65 °C) so that the concentrator tube is partially immersed in the hot water, and the entire lower rounded surface of the flask is bathed with hot vapor. Adjust the vertical position of the apparatus and the water temperature as required to complete the concentration in 15 to 20 min. At the proper rate of distillation the balls of the column will actively chatter but the chambers will not flood with condensed solvent. When the apparent volume of liquid reaches 1 mL, remove the K-D apparatus and allow it to drain and cool for at least 10 min.

10.8 Momentarily remove the Snyder column, add 50 mL of hexane and a new boiling chip, and reattach the Snyder column. Raise the temperature of the water bath to 85 to 90°C. Concentrate the extract as in Section 10.7, except use hexane to prewet the column. Remove the Snyder column and rinse the flask and its lower joint into the concentrator tube with 1 to 2 mL of hexane. A 5-mL syringe is recommended for this operation. Set aside the K-D glassware for reuse in Section 10.14.

10.9 Pour the hexane extract from the concentrator tube into a 125-mL separatory funnel. Rinse the concentrator tube four times with 10-mL aliquots of hexane. Combine all rinses in the 125-mL separatory funnel.

10.10 Add 50 mL of sodium hydroxide solution to the funnel and shake for 30 to 60 s. Discard the aqueous phase.

10.11 Perform a second wash of the organic layer with 50 mL of reagent water. Discard the aqueous phase.

10.12 Wash the hexane layer with a least two 50-mL aliquots of concentrated sulfuric acid. Continue washing the hexane layer with 50-mL aliquots of concentrated sulfuric acid until the acid layer remains colorless. Discard all acid fractions.

10.13 Wash the hexane layer with two 50-mL aliquots of reagent water. Discard the aqueous phases.

10.14 Transfer the hexane extract into a 125-mL Erlenmeyer flask containing 1 to 2 g of anhydrous sodium sulfate. Swirl the flask for 30 s and decant the hexane extract into the reassembled K-D apparatus. Complete the quantitative transfer with two 10-mL hexane rinses of the Erlenmeyer flask.

10.15 Replace the one or two clean boiling chips and concentrate the extract to 6 to 10 mL as in Section 10.8.

10.16 Add a clean boiling chip to the concentrator tube and attach a two-ball micro-Snyder column. Prewet the column by adding about 1 mL of hexane to the top. Place the micro-K-D apparatus on the water bath so that the concentrator tube is partially immersed in the hot water. Adjust the vertical position of the apparatus and the water temperature as required to complete the concentration in 5 to 10 min. At the proper rate of distillation the balls of the column will actively chatter but the chambers will not flood. When the apparent volume of liquid reaches about 0.5 mL, remove the K-D apparatus and allow it to drain and cool for at least 10 min. Remove the micro-Snyder column and rinse its lower joint into the concentrator tube with 0.2 mL of hexane.

Adjust the extract volume to 1.0 mL with hexane. Stopper the concentrator tube and store refrigerated and protected from light if further processing will not be performed immediately. If the extract will be stored longer than two days, it should be transferred to a Teflon-sealed screw-cap vial. If the sample extract requires no further cleanup, proceed with GC/MS analysis (Section 12). If the sample requires further cleanup, proceed to Section 11.

10.17 Determine the original sample volume by refilling the sample bottle to the mark and transferring the liquid to a 1000-mL graduated cylinder. Record the sample volume to the nearest 5 mL.

11. Cleanup and Separation

11.1 Cleanup procedures may not be necessary for a relatively clean sample matrix. If particular circumstances demand the use of a cleanup procedure, the analyst may use either procedure below or any other appropriate procedure.[1,5M7] However, the analyst first must demonstrate that the requirements of Section 8.2 can be met using the method as revised to incorporate the cleanup procedure. Two cleanup column options are offered to the analyst in this section. The alumina column should be used first to overcome interferences. If background problems are still encountered, the silica gel column may be helpful.

11.2 Alumina column cleanup for 2,3,7,8–TCDD:

11.2.1 Fill a 300 mm long × 10 mm ID chromatographic column with activated alumina to the 150 mm level. Tap the column gently to settle the alumina and add 10 mm of anhydrous sodium sulfate to the top.

11.2.2 Preelute the column with 50 mL of hexane. Adjust the elution rate to 1 mL/min. Discard the eluate and just prior to exposure of the sodium sulfate layer to the air, quantitatively transfer the 1.0-mL sample extract onto the column using two 2-mL portions of hexane to complete the transfer.

11.2.3 Just prior to exposure of the sodium sulfate layer to the air, add 50 mL of 3% methylene chloride/95% hexane (V/V) and continue the elution of the column. Discard the eluate.

11.2.4 Next, elute the column with 50 mL of 20% methylene chloride/80% hexane (V/V) into a 500-mL K-D flask equipped with a 10-mL concentrator tube. Concentrate the collected fraction to 1.0 mL as in Section 10.16 and analyze by GC/MS (Section 12).

11.3 Silica gel column cleanup for 2,3,7,8–TCDD:

11.3.1 Fill a 400 mm long × 11 mm ID chromatmgraphic column with silica gel to the 300 mm level. Tap the column gently to settle the silica gel and add 10 mm of anhydrous sodium sulfate to the top.

11.3.2 Preelute the column with 50 mL of 20% benzene/80% hexane (V/V). Adjust the elution rate to 1 mL/min. Discard the eluate and just prior to exposure of the sodium sulfate layer to the air, quantitatively transfer the 1.0-mL sample extract onto the column using two 2-mL portions of 20% benzene/80% hexane to complete the transfer.

11.3.3 Just prior to exposure of the sodium sulfate layer to the air, add 40 mL of 20% benzene/80% hexane to the column. Collect the eluate in a clean 500-mL K-D flask equipped with a 10-mL concentrator tube. Concentrate the collected fraction to 1.0 mL as in Section 10.16 and analyze by GC/MS.

12. GC/MS Analysis

12.1 Table 1 summarizes the recommended operating conditions for the gas chromatograph. Included in this table are retention times and MDL that can be achieved under these conditions. Other capillary columns or chromatographic conditions may be used if the requirements of Sections 5.5.2 and 8.2 are met.

12.2 Analyze standards and samples with the mass spectrometer operating in the selected ion monitoring (SIM) mode using a dwell time to give at least seven points per peak. For LRMS, use masses at m/z 320, 322, and 257 for 2,3,7,8–TCDD and either m/z 328 for $^{37}Cl_4$ 2,3,7,8–TCDD or m/z 332 for $^{13}C_{12}$ 2,3,7,8–TCDD. For HRMS, use masses at m/z 319.8965 and 321.8936 for 2,3,7,8–TCDD and either m/z 327.8847 for $^{37}Cl_4$ 2,3,7,8–TCDD or m/z 331.9367 for $^{13}C_{12}$ 2,3,7,8–TCDD.

12.3 If lower detection limits are required, the extract may be carefully evaporated to dryness under a gentle stream of nitrogen with the concentrator tube in a water bath at about 40 °C. Conduct this operation immediately before GC/MS analysis. Redissolve the extract in the desired final volume of ortho-xylene or tetradecane.

12.4 Calibrate the system daily as described in Section 7.

12.5 Inject 2 to 5 µL of the sample extract into the gas chromatograph. The volume of calibration standard injected must be measured, or be the same as all sample injection volumes.

12.6 The presence of 2,3,7,8–TCDD is qualitatively confirmed if all of the following criteria are achieved:

12.6.1 The gas chromatographic column must resolve 2,3,7,8–TCDD from the other 21 TCDD isomers.

12.6.2 The masses for native 2,3,7,8–TCDD (LRMS-m/z 320, 322, and 257 and HRMS-m/z 320 and 322) and labeled 2,3,7,8–TCDD (m/z 328 or 332) must exhibit a simultaneous maximum at a retention time that matches that of native 2,3,7,8–TCDD in the calibration standard, with the performance specifications of the analytical system.

12.6.3 The chlorine isotope ratio at m/z 320 and m/z 322 must agree to within±10% of that in the calibration standard.

12.6.4 The signal of all peaks must be greater than 2.5 times the noise level.

12.7 For quantitation, measure the response of the m/z 320 peak for 2,3,7,8–TCDD and the m/z 332 peak for $^{13}C_{12}$ 2,3,7,8–TCDD or the m/z 328 peak for $^{37}Cl_4$ 2,3,7,8–TCDD.

12.8 Co-eluting impurities are suspected if all criteria are achieved except those in Section 12.6.3. In this case, another SIM analysis using masses at m/z 257, 259, 320 and either m/a 328 or m/z 322 can be performed. The masses at m/z 257 and m/z 259 are indicative of the loss of one chlorine and one carbonyl group from 2,3,7,8–TCDD. If masses m/z 257 and m/z 259 give a chlorine isotope ratio that agrees to within ±10% of the same cluster in the calibration standards, then the presence of TCDD can be confirmed. Co-eluting DDD, DDE, and PCB residues can be confirmed, but will require another injection using the appropriate SIM masses or full repetitive mass scans. If the response for $^{37}Cl_4$ 2,3,7,8–TCDD at m/z 328 is too large, PCB contamination is suspected and can be confirmed by examining the response at both m/z 326 and m/z 328. The $^{37}Cl_4$ 2,3,7,8–TCDD internal standard gives negligible response at m/z 326. These pesticide residues can be removed using the alumina column cleanup procedure.

12.9 If broad background interference restricts the sensitivity of the GC/MS analysis, the analyst should employ additional cleanup procedures and reanalyze by GC/MS.

12.10 In those circumstances where these procedures do not yield a definitive conclusion, the use of high resolution mass spectrometry is suggested.[5]

13. Calculations

13.1 Calculate the concentration of 2,3,7,8–TCDD in the sample using the response factor (RF) determined in Section 7.1.2 and Equation 2.

$$\text{Concentration } (\mu g/L) = \frac{(A)(V_t)}{(V_i)(V_s)}$$

Equation 2

where:

A_s=SIM response for 2,3,7,8–TCDD at m/z 320.

A_{is}=SIM response for the internal standard at m/z 328 or 332.

I_s=Amount of internal standard added to each extract (µg).

V_o=Volume of water extracted (L).

13.2 For each sample, calculate the percent recovery of the internal standard by comparing the area of the m/z peak measured in the sample to the area of the same peak in the calibration standard. If the recovery is below 50%, the analyst should review all aspects of his analytical technique.

13.3 Report results in µg/L without correction for recovery data. All QC data obtained should be reported with the sample results.

14. Method Performance

14.1 The method detection limit (MDL) is defined as the minimum concentration of a substance that can be measured and reported with 99% confidence that the value is above zero.[1] The MDL concentration listed in Table 1 was obtained using reagent water.[14] The MDL actually achieved in a given analysis will vary depending on instrument sensitivity and matrix effects.

14.2 This method was tested by 11 laboratories using reagent water, drinking water, surface water, and three industrial wastewaters spiked at six concentrations over the range 0.02 to 0.20 µg/L.[15] Single operator precision, overall precision, and method accuracy were found to be directly related to the concentration of the parameter and essentially independent of the sample matrix. Linear equations to describe these relationships are presented in Table 3.

REFERENCES

1. 40 CFR part 136, appendix B.

2. ''Determination of TCDD in Industrial and Municipal Wastewaters,'' EPA 600/4–82–028, National Technical Information Service, PB82–196882, Springfield, Virginia 22161, April 1982.

3. Buser, H.R., and Rappe, C. ''High Resolution Gas Chromatography of the 22 Tetrachlorodibenzo-p-dioxin Isomers,'' *Analytical Chemistry*, *52*, 2257 (1980).

4. ASTM Annual Book of Standards, Part 31, D3694–78. ''Standard Practices for Preparation of Sample Containers and for Preservation of Organic Constituents,'' American Society for Testing and Materials, Philadelphia.

5. Harless, R. L., Oswald, E. O., and Wilkinson, M. K. ''Sample Preparation and Gas Chromatography/Mass Spectrometry Determination of 2,3,7,8-Tetrachlorodibenzo-p-dioxin,'' *Analytical Chemistry*, *52*, 1239 (1980).

6. Lamparski, L. L., and Nestrick, T. J. ''Determination of Tetra-, Hepta-, and Octachlorodibenzo-p-dioxin Isomers in Particulate Samples at Parts per Trillion Levels,'' *Analytical Chemistry*, *52*, 2045 (1980).

7. Longhorst, M. L., and Shadoff, L. A. ''Determination of Parts-per-Trillion Concentrations of Tetra-, Hexa-, and Octachlorodibenzo-p-dioxins in Human Milk,'' *Analytical Chemistry*, *52*, 2037 (1980).

8. ''Carcinogens—Working with Carcinogens,'' Department of Health, Education, and Welfare, Public Health Service, Center for Disease Control, National Institute for Occupational Safety and Health, Publication No. 77–206, August 1977.

9. ''OSHA Safety and Health Standards, General Industry,'' (29 CFR part 1910), Occuptional Safety and Health Administration, OSHA 2206 (Revised, January 1976).

10. ‘‘Safety in Academic Chemistry Laboratories,’’ American Chemical Society Publication, Committee on Chemical Safety, 3rd Edition, 1979.

11. Provost, L. P., and Elder, R. S., ‘‘Interpretation of Percent Recovery Data,’’ *American Laboratory, 15,* 58–63 (1983). (The value 2.44 used in the equation in Section 8.3.3 is two times the value 1.22 derived in this report.)

12. ASTM Annual Book of Standards, Part 31, D3370–76, ‘‘Standard Practices for Sampling Water,’’ American Society for Testing and Materials, Philadelphia.

13. ‘‘Methods, 330.4 (Titrimetric, DPD-FAS) and 330.5 (Spectrophotometric DPD) for Chlorine, Total Residual,’’ Methods for Chemical Analysis of Water and Wastes, EPA–600/4–79–020, U.S. Environmental Protection Agency, Environmental Monitoring and Support Laboratory, Cincinnati, Ohio 45268, March 1979.

14. Wong, A.S. et al. ‘‘The Determination of 2,3,7,8–TCDD in Industrial and Municipal Wastewaters, Method 613, Part 1—Development and Detection Limits,’’ G. Choudhay, L. Keith, and C. Ruppe, ed., Butterworth Inc., (1983).

15. ‘‘EPA Method Study 26, Method 613: 2,3,7,8–Tetrachlorodibenzo-p-dioxin,’’ EPA 600/4–84–037, National Technical Information Service, PB84–188879, Springfield, Virginia 22161, May 1984.

TABLE 1—CHROMATOGRAPHIC CONDITIONS AND METHOD DETECTION LIMIT

Parameter	Retention time (min)	Method detection limit (µg/L)
2,3,7,8–TCDD	13.1	0.002

Column conditions: SP–2330 coated on a 60 m long × 0.25 mm ID glass column with hydrogen carrier gas at 40 cm/sec linear velocity, splitless injection using tetradecane. Column temperature held isothermal at 200°C for 1 min, then programmed at 8°C/min to 250 °C and held. Use of helium carrier gas will approximately double the retention time.

TABLE 2—QC ACCEPTANCE CRITERIA—METHOD 613

Parameter	Test conc. (µg/L)	Limit for s (µg/L)	Range for X (µg/L)	Range for P, P_s (%)
2,3,7,8–TCDD	0.100	0.0276	0.0523–0.1226	45–129

s=Standard deviation of four recovery measurements, in µg/L (Section 8.2.4).

$\bar{X}$=Average recovery for four recovery measurements, in µg/L (Section 8.2.4).

P, P_s=Percent recovery measured (Section 8.3.2, Section 8.4.2).

NOTE: These criteria are based directly upon the method performance data in Table 3. Where necessary, the limits for recovery have been broadened to assure applicability of the limits to concentrations below those used to develop Table 3.

TABLE 3—METHOD ACCURACY AND PRECISION AS FUNCTIONS OF CONCENTRATION—METHOD 613

Parameter	Accuracy, as recovery, X′ (µg/L)	Single analyst, precision, s_r′ (µ/L)	Overall precision, S′ (µ/g/L)
2,3,7,8-TCDD	0.86C+0.00145	$0.13\bar{X}+0.00129$	$0.19\bar{X}+0.00028$

X′=Expected recovery for one or more measurements. of a sample containing a concentration of C, in µg/L.
s_r′=Expected single analyst standard deviation of measurements at an average concentration found of $\bar{X}$, in µg/L.
S′=Expected interlaboratory standard deviation of measurements at an average concentration found of $\bar{X}$, in µg/L.
C=True value for the concentration, in µg/L.
$\bar{X}$=Average recovery found for measurements of samples containing a concentration of C, in µg/L.

METHOD 624—PURGEABLES

1. Scope and Application

1.1 This method covers the determination of a number of purgeable organics. The following parameters may be determined by this method:

Parameter	STORET No.	CAS No.
Benzene	34030	71–43–2
Bromodichloromethane	32101	75–27–4
Bromoform	32104	75–25–2
Bromomethane	34413	74–83–9
Carbon tetrachloride	32102	56–23–5
Chlorobenzene	34301	108–90–7
Chloroethane	34311	75–00–3
2-Chloroethylvinyl ether	34576	110–75–8
Chloroform	32106	67–66–3
Chloromethane	34418	74–87–3
Dibromochloromethane	32105	124–48–1
1,2-Dichlorobenzene	34536	95–50–1
1,3-Dichlorobenzene	34566	541–73–1
1,4-Dichlorobenzene	34571	106–46–7
1,1-Dichloroethane	34496	75–34–3
1,2-Dichloroethane	34531	107–06–2
1,1-Dichloroethane	34501	75–35–4
trans-1,2-Dichloroethene	34546	156–60–5
1,2-Dichloropropane	34541	78–87–5
cis-1,3-Dichloropropene	34704	10061–01–5
trans-1,3-Dichloropropene	34699	10061–02–6
Ethyl benzene	34371	100–41–4
Methylene chloride	34423	75–09–2
1,1,2,2-Tetrachloroethane	34516	79–34–5
Tetrachloroethene	34475	127–18–4
Toluene	34010	108–88–3
1,1,1-Trichloroethene	34506	71–55–6
1,1,2-Trichloroethene	34511	79–00–5
Trichloroethane	39180	79–01–6
Trichlorofluoromethane	34488	75–69–4
Vinyl chloride	39175	75–01–4

1.2 The method may be extended to screen samples for acrolein (STORET No. 34210, CAS No. 107–02–8) and acrylonitrile (STORET No. 34215, CAS No. 107–13–1), however, the preferred method for these two compounds in Method 603.

1.3 This is a purge and trap gas chromatographic/mass spectrometer (GC/MS) method applicable to the determination of the compounds listed above in municipal and industrial discharges as provided under 40 CFR 136.1.

1.4 The method detection limit (MDL, defined in Section 14.1)[1] for each parameter is listed in Table 1. The MDL for a specific wastewater may differ from those listed, depending upon the nature of interferences in the sample matrix.

1.5 Any modification to this method, beyond those expressly permitted, shall be considered as a major modification subject to application and approval of alternate test procedures under 40 CFR 136.4 and 136.5. Depending upon the nature of the modification and the extent of intended use, the applicant may be required to demonstrate that the modifications will produce equivalent results when applied to relevant wastewaters.

1.6 This method is restricted to use by or under the supervision of analysts experienced in the operation of a purge and trap system and a gas chromatograph/mass spectrometer and in the interpretation of mass spectra. Each analyst must demonstrate the ability to generate acceptable results with this method using the procedure described in Section 8.2.

2. Summary of Method

2.1 An inert gas is bubbled through a 5-mL water sample contained in a specially-designed purging chamber at ambient temperature. The purgeables are efficiently transferred from the aqueous phase to the vapor phase. The vapor is swept through a sorbent trap where the purgeables are trapped. After purging is completed, the trap is heated and backflushed with the inert gas to desorb the purgeables onto a gas chromatographic column. The gas chromatograph is temperature programmed to separate the purgeables which are then detected with a mass spectrometer.[2,3]

3. Interferences

3.1 Impurities in the purge gas, organic compounds outgassing from the plumbing ahead of the trap, and solvent vapors in the laboratory account for the majority of contamination problems. The analytical system must be demonstated to be free from contamination under the conditions of the analysis by running laboratory reagent blanks as described in Section 8.1.3. The use of non-Teflon plastic tubing, non-Teflon thread sealants, or flow controllers with rubber components in the purge and trap system should be avoided.

3.2 Samples can be contaminated by diffusion of volatile organics (particularly fluorocarbons and methylene chloride) through the septum seal into the sample during shipment and storage. A field reagent blank prepared from reagent water and carried through the sampling and handling protocol can serve as a check on such contamination.

3.3 Contamination by carry-over can occur whenever high level and low level samples are sequentially analyzed. To reduce carry-over, the purging device and sample syringe must be rinsed with reagent water between sample analyses. Whenever an unusually concentrated sample is encountered, it should be followed by an analysis of reagent water to check for cross contamination. For samples containing large amounts of water-soluble materials, suspended solids, high boiling compounds or high pureeable levels, it may be necessary to wash the purging device with a detergent solution, rinse it with distilled water, and then dry it in a 105 °C oven between analyses. The trap and other parts of the system are also subject to contamination; therefore, frequent bakeout and purging of the entire system may be required.

4. Safety

4.1 The toxicity or carcinogenicity of each reagent used in this method has not been precisely defined; however, each chemical compound should be treated as a potential health hazard. From this viewpoint, exposure to these chemicals must be reduced to the lowest possible level by whatever means available. The laboratory is responsible for maintaining a current awareness file of OSHA regulations regarding the safe handling of the chemicals specified in this methmd. A reference file of material data handling sheets should also be made available to all personnel involved in the chemical analysis. Additional references to laboratory safety are available and have been identified[4-6] for the information of the analyst.

4.2. The following parameters covered by this method have been tentatively classified as known or suspected, human or mammalian carcinogens: benzene, carbon tetrachloride, chloroform, 1,4-dichlorobenzene, and vinyl chloride. Primary standards of these toxic compounds should be prepared in a hood. A NIOSH/MESA approved toxic gas respirator should be worn when the analyst handles high concentrations of these toxic compounds.

5. Apparatus and Materials

5.1 Sampling equipment, for discrete sampling.

5.1.1 Vial—25-mL capacity or larger, equipped with a screw cap with a hole in the center (Pierce #13075 or equivalent). Detergent wash, rinse with tap and distilled water, and dry at 105 °C before use.

5.1.2 Septum—Teflon-faced silicane (Pierce #12722 or equivalent). Detergent wash, rinse with tap and distilled water, and dry at 105 °C for 1 h before use.

5.2 Purge and trap system—The purge and trap system consists of three separate pieces of equipment: A purging device, trap, and desorber. Several complete systems are now commercially available.

5.2.1 The purging device must be designed to accept 5-mL samples with a water column at least 3 cm deep. The gaseous head space between the water column and the trap must have a total volume of less than 15 mL. The purge gas must pass though the water column as finely divided bubbles with a diameter of less than 3 mm at the origin. The purge gas must be introduced no more than 5 mm from the base of the water column. The purging device illustrated in Figure 1 meets these design criteria.

5.2.2 The trap must be at least 25 cm long and have an inside diameter of at least 0.105 in. The trap must be packed to contain the following minimum lengths of adsorbents: 1.0 cm of methyl silicone coated packing (Section 6.3.2), 15 cm of 2,6-dyphenylene oxide polymer (Section 6.3.1), and 8 cm of silica gel (Section 6.3.3). The minimum specifications for the trap are illustrated in Figure 2.

5.2.3 The desorber should be capable of rapidly heating the trap to 180 °C. The polymer section of the trap should not be heated higher than 180 °C and the remaining sections should not exceed 200 °C. The desorber illustrated in Figure 2 meets these design criteria.

5.2.4 The purge and trap system may be assembled as a separate unit or be coupled to a gas chromatograph as illustrated in Figures 3 and 4.

5.3 GC/MS system:

5.3.1 Gas chromatograph—An analytical system complete with a temperature programmable gas chromatograph suitable for on-column injection and all required accessories including syringes, analytical columns, and gases.

5.3.2 Column—6 ft long × 0.1 in ID stainless steel or glass, packed with 1% SP–1000 on Carbopack B (60/80 mesh) or equivalent. This column was used to develop the method performance statements in Section 14. Guidelines for the use of alternate column packings are provided in Section 11.1.

5.3.3 Mass spectrometer—Capable of scanning from 20 to 260 amu every 7 s or less, utilizing 70 V (nominal) electron energy in the electron impact ionization mode, and producing a mass spectrum which meets all the criteria in Table 2 when 50 ng of 4-bromofluorobenzene (BFB) is injected through the GC inlet.

5.3.4 GC/MS interface—Any GC to MS interface that gives acceptable calibration points at 50 ng or less per injection for each of the parameters of interest and achieves all acceptable performance criteria (Section 10) may be used. GC to MS interfaces constructed of all glass or glass-lined materials are recommended. Glass can be deactivated by silanizing with dichlorodimethylsilane.

5.3.5 Data system—A computer system must be interfaced to the mass spectrometer that allows the continuous acquisition and storage on machine-readable media of all mass spectra obtained throughout the duration of the chromatographic program. The computer must have software that allows searching any GC/MS data file for specific m/z (masses) and plotting such m/z abundances versus time or scan number. This type of plot is defined as an Extracted Ion Current Profile (EICP). Software must also be available that allows integrating the abundance in any EICP between specified time or scan number limits.

5.4 Syringes—5-mL, glass hypodermic with Luerlok tip (two each), if applicable to the purging device.

5.5 Micro syringes—25-µL, 0.006 in. ID needle.

5.6 Syringe valve—2-way, with Luer ends (three each).

5.7 Syringe—5-mL, gas-tight with shut-off valve.

5.8 Bottle—15-mL, screw-cap, with Teflon cap liner.

5.9 Balance—Analytical, capable of accurately weighing 0.0001 g.

6. Reagents

6.1 Reagent water—Reagent water is defined as a water in which an interferent is not observed at the MDL of the parameters of interest.

6.1.1 Reagent water can be generated by passing tap water through a carbon filter bed containing about 1 lb of activated carbon (Filtrasorb–300, Calgon Corp., or equivalent).

6.1.2 A water purification system (Millipore Super-Q or equivalent) may be used to generate reagent water.

6.1.3 Reagent water may also be prepared by boiling water for 15 min. Subsequently, while maintaining the temperature at 90 °C, bubble a contaminant-free inert gas through the water for 1 h. While still hot, transfer the water to a narrow mouth screw-cap bottle and seal with a Teflon-lined septum and cap.

6.2 Sodium thiosulfate—(ACS) Granular.

6.3 Trap materials:

6.3.1 2,6-Diphenylene oxide polymer—Tenax, (60/80 mesh), chromatographic grade or equivalent.

6.3.2 Methyl silicone packing—3% OV–1 on Chromosorb-W (60/80 mesh) or equivalent.

6.3.3 Silica gel—35/60 mesh, Davison, grade-15 or equivalent.

6.4 Methanol—Pesticide quality or equivalent.

6.5 Stock standard solutions—Stock standard solutions may be prepared from pure standard materials or purchased as certified solutions. Prepare stock standard solutions in methanol using assayed liquids or gases as appropriate. Because of the toxicity of some of the compounds, primary dilutions of these materials should be prepared in a hood. A NIOSH/MESA approved toxic gas respirator should be used when the analyst handles high concentrations of such materials.

6.5.1 Place about 9.8 mL of methanol into a 10-mL ground glass stoppered volumetric flask. Allow the flask to stand, unstoppered, for about 10 min or until all alcohol wetted surfaces have dried. Weigh the flask to the nearest 0.1 mg.

6.5.2 Add the assayed reference material:

6.5.2.1 Liquids—Using a 100-μL syringe, immediately add two or more drops of assayed reference material to the flask, then reweigh. Be sure that the drops fall directly into the alcohol without contacting the neck of the flask.

6.5.2.2 Gases—To prepare standards for any of the four halocarbons that boil below 30 °C (bromomethane, chloroethane, chloromethane, and vinyl chloride), fill a 5-mL valved gas-tight syringe with the reference standard to the 5.0-mL mark. Lower the needle to 5 mm above the methanol meniscus. Slowly introduce the reference standard above the surface of the liquid (the heavy gas will rapidly dissolve in the methanol).

6.5.3 Reweigh, dilute to volume, stopper, then mix by inverting the flask several times. Calculate the concentration in μg/μL from the net gain in weight. When compound purity is assayed to be 96% or greater, the weight may be used without correction to calculate the concentration of the stock standard. Commercially prepared stock standards may be used at any concentration if they are certified by the manufacturer or by an independent source.

6.5.4 Transfer the stock standard solution into a Teflon-sealed screw-cap bottle. Store, with minimal headspace, at −10 to −20 °C and protect from light.

6.5.5 Prepare fresh standards weekly for the four gases and 2-chloroethylvinyl ether. All other standards must be replaced after one month, or sooner if comparison with check standards indicates a problem.

6.6 Secondary dilution standards—Using stock solutions, prepare secondary dilution standards in methanol that contain the compounds of interest, either singly or mixed together. The secondary dilution standards should be prepared at concentrations such that the aqueous calibration standards prepared in Section 7.3 will bracket the working range of the analytical system. Secondary dilution standards should be stored with minimal headspace and should be checked frequently for signs of degradation or evaporation, especially just prior to preparing calibration standards from them.

6.7 Surrogate standard spiking solution—Select a minimum of three surrogate compounds from Table 3. Prepare stock standard solutions for each surrogate standard in methanol as described in Section 6.5. Prepare a surrogate standard spiking solution from these stock standards at a concentration of 15 μg/mL in water. Store the solutions at 4 °C in Teflon-sealed glass containers with a minimum of headspace. The solutions should be checked frequently for stability. The addition of 10 μL of this solution of 5 mL of sample or standard is equivalent to a concentration of 30 μg/L of each surrogate standard.

6.8 BFB Standard—Prepare a 25 μg/mL solution of BFB in methanol.

6.9 Quality control check sample concentrate—See Section 8.2.1.

7. Calibration

7.1 Assemble a purge and trap system that meets the specifications in Section 5.2. Condition the trap overnight at 180 °C by backflushing with an inert gas flow of at least 20 mL/min. Condition the trap for 10 min once daily prior to use.

7.2 Connect the purge and trap system to a gas chromatograph. The gas chromatograph must be operated using temperature and flow rate conditions equivalent to those given in Table 1.

7.3 Internal standard calibration procedure—To use this approach, the analyst must select three or more internal standards that are similar in analytical behavior to the compounds of interest. The analyst must further demonstrate that the measurement of the internal standard is not affected by method or matrix interferences. Some recommended internal standards are listed in Table 3.

7.3.1 Prepare calibration standards at a minimum of three concentration levels for each parameter by carefully adding 20.0 μL of one or more secondary dilution standards to 50, 250, or 500 mL of reagent water. A 25-μL syringe with a 0.006 in. ID needle should be used for this operation. One of the calibration standards should be at a concentration near, but above, the MDL (Table 1) and the other concentrations should correspond to the expected range of concentrations found in real samples or should define the working range of the GC/MS system. These aqueous standards can be stored up to 24 h, if held in sealed vials with zero headspace as described in Section 9.2. If not so stored, they must be discarded after 1 h.

7.3.2 Prepare a spiking solution containing each of the internal standards using the procedures described in Sections 6.5 and

6.6. It is recommended that the secondary dilution standard be prepared at a concentration of 15 μg/mL of each internal standard compound. The addition of 10 μL of this standard to 5.0 mL of sample or calibration standard would be equivalent to 30 μg/L.

7.3.3 Analyze each calibration standard according to Section 11, adding 10 μL of internal standard spiking solution directly to the syringe (Section 11.4). Tabulate the area response of the characteristic m/z against concentration for each compound and internal standard, and calculate response factors (RF) for each compound using Equation 1.

$$RF = \frac{(A_s)(C_{is})}{(A_{is})(C_s)}$$

Equation 1

where:

A_s=Area of the characteristic m/z for the parameter to be measured.

A_{is}=Area of the characteristic m/z for the inernal standard.

C_{is}=Concentration of the internal standard.

C_s=Concentration of the parameter to be measured.

If the RF value over the working range is a constant (<35% RSD), the RF can be assumed to be invariant and the average RF can be used for calculations. Alternatively, the results can be used to plot a calibration curve of response ratios, A_s/A_{is}, vs. RF.

7.4 The working calibration curve or RF must be verified on each working day by the measurement of a QC check sample.

7.4.1 Prepare the QC check sample as described in Section 8.2.2.

7.4.2 Analyze the QC check sample according to the method beginning in Section 10.

7.4.3 For each parameter, compare the response (Q) with the corresponding calibration acceptance criteria found in Table 5. If the responses for all parameters of interest fall within the designated ranges, analysis of actual samples can begin. If any individual Q falls outside the range, proceed according to Section 7.4.4.

NOTE: The large number of parameters in Table 5 present a substantial probability that one or more will not meet the calibration acceptance criteria when all parameters are analyzed.

7.4.4 Repeat the test only for those parameters that failed to meet the calibration acceptance criteria. If the response for a parameter does not fall within the range in this second test, a new calibration curve or RF must be prepared for that parameter according to Section 7.3.

8. Quality Control

8.1 Each laboratory that uses this method is required to operate a formal quality control program. The minimum requirements of this program consist of an initial demonstration of laboratory capability and an ongoing analysis of spiked samples to evaluate and document data quality. The laboratory must maintain records to document the quality of data that is generated. Ongoing data quality checks are compared with established performance criteria to determine if the results of analyses meet the performance characteristics of the method. When results of sample spikes indicate atypical method performance, a quality control check standard must be analyzed to confirm that the measurements were performed in an in-control mode of operation.

8.1.1 The analyst must make an initial, one-time, demonstration of the ability to generate acceptable accuracy and precision with this method. This ability is established as described in Section 8.2.

8.1.2 In recognition of advances that are occurring in chromatography, the analyst is permitted certain options (detailed in Section 11.1) to improve the separations or lower the cost of measurements. Each time such a modification is made to the method, the analyst is required to repeat the procedure in Section 8.2.

8.1.3 Each day, the analyst must analyze a reagent water blank to demonstrate that interferences from the analytical system are under control.

8.1.4 The laboratory must, on an ongoing basis, spike and analyze a minimum of 5% of all samples to monitor and evaluate laboratory data quality. This procedure is described in Section 8.3.

8.1.5 The laboratory must, on an ongoing basis, demonstrate through the analyses of quality control check standards that the operation of the measurement system is in control. This procedure is described in Section 8.4. The frequency of the check standard analyses is equivalent to 5% of all samples analyzed but may be reduced if spike recoveries from samples (Section 8.3) meet all specified quality control criteria.

8.1.6 The laboratory must spike all samples with surrogate standards to monitor continuing laboratory performance. This procedure is described in Section 8.5.

8.1.7 The laboratory must maintain performance records to document the quality of data that is generated. This procedure is described in Section 8.6.

8.2 To establish the ability to generate acceptable accuracy and precision, the analyst must perform the following operations.

8.2.1 A quality control (QC) check sample concentrate is required containing each parameter of interest at a concentration of 10 μg/mL in methanol. The QC check sample concentrate must be obtained from the U.S. Environmental Protection Agency, Environmental Monitoring and Support Laboratory in Cincinnati, Ohio, if available. If not available from that source, the QC check sample concentrate must be obtained from another external source. If not available from either source above, the QC check sample concentrate must be prepared by the laboratory using stock standards prepared independently from those used for calibration.

8.2.2 Prepare a QC check sample to contain 20 μg/L of each parameter by adding 200 μL of QC check sample concentrate to 100 mL of reagent water.

8.2.3 Analyze four 5-mL aliquots of the well-mixed QC check sample according to the method beginning in Section 10.

8.2.4 Calculate the average recovery ($\bar{X}$) in μg/L, and the standard deviation of the recovery (s) in μg/L, for each parameter of interest using the four results.

8.2.5 For each parameter compare s and $\bar{X}$ with the corresponding acceptance criteria for precision and accuracy, respectively, found in Table 5. If s and $\bar{X}$ for all parameters of interest meet the acceptance criteria, the system performance is acceptable and analysis of actual samples can begin. If any individual s exceeds the precision limit or any individual $\bar{X}$ falls outside the range for accuracy, the system performance is unacceptable for that parameter.

NOTE: The large number of parameters in Table 5 present a substantial probability that one or more will fail at least one of the acceptance criteria when all parameters are analyzed.

8.2.6 When one or more of the parameters tested fail at least one of the acceptance criteria, the analyst must proceed according to Section 8.2.6.1 or 8.2.6.2.

8.2.6.1 Locate and correct the source of the problem and repeat the test for all parameters of interest beginning with Section 8.2.3.

8.2.6.2 Beginning with Section 8.2.3, repeat the test only for those parameters that failed to meet criteria. Repeated failure, however, will confirm a general problem with the measurement system. If this occurs, locate and correct the source of the problem and repeat the test for all compounds of interest beginning with Section 8.2.3.

8.3 The laboratory must, on an ongoing basis, spike at least 5% of the samples from each sample site being monitored to assess accuracy. For laboratories analyzing 1 to 20 samples per month, at least one spiked sample per month is required.

8.3.1 The concentration of the spike in the sample should be determined as follows:

8.3.1.1 If, as in compliance monitoring, the concentration of a specific parameter in the sample is being checked against a regulatory concentration limit, the spike should be at that limit or 1 to 5 times higher than the background concentration determined in Section 8.3.2, whichever concentration would be larger.

8.3.1.2 If the concentration of a specific parameter in the sample is not being checked against a limit specific to that parameter, the spike should be at 20 μg/L or 1 to 5 times higher than the background concentration determined in Section 8.3.2, whichever concentration would be larger.

8.3.2 Analyze one 5-mL sample aliquot to determine the background concentration (B) of each parameter. If necessary, prepare a new QC check sample concentrate (Section 8.2.1) appropriate for the background concentrations in the sample. Spike a second 5-mL sample aliquot with 10 μL of the QC check sample concentrate and analyze it to determine the concentration after spiking (A) of each parameter. Calculate each percent recovery (P) as $100(A-B)\%/T$, where T is the known true value of the spike.

8.3.3 Compare the percent recovery (P) for each parameter with the corresponding QC acceptance criteria found in Table 5. These acceptance criteria wer calculated to include an allowance for error in measurement of both the background and spike concentrations, assuming a spike to background ratio of 5:1. This error will be accounted for to the extent that the analyst's spike to background ratio approaches 5:1.[7] If spiking was performed at a concentration lower than 20 μg/L, the analyst must use either the QC acceptance criteria in Table 5, or optional QC acceptance criteria calculated for the specific spike concentration. To calculate optional acceptance criteria for the recoveryof a parameter: (1) Calculate accuracy (X′) using the equation in Table 6, substituting the spike concentration (T) for C; (2) calculate overall precision (S′) using the equation in Table 6, substituting X′ for $\bar{X}$; (3) calculate the range for recovery at the spike concentration as $(100\ X'/T)\ (\pm 2.44(100\ S'/T)\%$.[7]

8.3.4 If any individual P falls outside the designated range for recovery, that parameter has failed the acceptance criteria. A check standard containing each parameter that failed the criteria must be analyzed as described in Section 8.4.

8.4 If any parameter fails the acceptance criteria for recovery in Section 8.3, a QC check standard containing each parameter that failed must be prepared and analyzed.

NOTE: The frequency for the required anlaysis of a QC check standard will depend upon the number of parameters being simultaneously tested, the complexity of the sample matrix, and the performance of the laboratory. If the entire list of parameters in Table 5 must be measured in the sample in Section 8.3, the probability that the analysis of a QC check standard will be required is high. In this case the QC check standard should be routinely analyzed with the spiked sample.

8.4.1 Prepare the QC check standard by adding 10 μL of QC check sample concentrate (Section 8.2.1 or 8.3.2) to 5 mL of reagent water. The QC check standard needs only to contain the parameters that failed criteria in the test in Section 8.3.

8.4.2 Analyze the QC check standard to determine the concentration measured (A) of each parameter. Calculate each percent recovery (P_S) as 100 (A/T)%, where T is the true value of the standard concentration.

8.4.3 Compare the percent recovery (P_S) for each parameter with the corresponding QC acceptance criteria found in Table 5. Only parameters that failed the test in Section 8.3 need to be compared with these criteria. If the recovery of any such parameter falls outside the designated range, the laboratory performance for that parameter is judged to be out of control, and the problem must be immediately identified and corrected. The analytical result for that parameter in the unspiked sample is suspect and may not be reported for regulatory compliance purposes.

8.5 As a quality control check, the laboratory must spike all samples with the surrogate standard spiking solutions as described in Section 11.4, and calculate the percent recovery of each surrogate compound.

8.6 As part of the QC program for the laboratory, method accuracy for wastewater samples must be assessed and records must be maintained. After the analysis of five spiked wastewater samples as in Section 8.3, calculate the average percent recovery ($\bar{P}$) and the standard deviation of the percent recovery (s_p). Express the accuracy assessment as a percent recovery interval from $\bar{P}$—$2s_p$ to $\bar{P} + 2s_p$. If $\bar{P}$=90% and s_p=10%, for example, the accuracy interval is expressed as 70–110%. Update the accuracy assessment for each parameter a regular basis (e.g. after each five to ten new accuracy measurements).

8.7 It is recommended that the laboratory adopt additional quality assurance practices for use with this method. The specific practices that are most productive depend upon the needs of the laboratory and the nature of the samples. Field duplicates may be analyzed to assess the precision of the environmental measurements. Whenever possible, the laboratory should analyze standard reference materials and participate in relevant performance evaluation studies.

9. Sample Collection, Preservation, and Handling

9.1 All samples must be iced or refrigerated from the time of collection until analysis. If the sample contains residual chlorine, add sodium thiosulfate preservative (10 mg/40 mL is sufficient for up to 5 ppm Cl_2) to the empty sample bottle just prior to shipping to the sampling site. EPA Methods 330.4 and 330.5 may be used for measurement of residual chlorine.[8] Field test kits are available for this purpose.

9.2 Grab samples must be collected in glass containers having a total volume of at least 25 mL. Fill the sample bottle just to overflowing in such a manner that no air bubbles pass through the sample as the bottle is being filled. Seal the bottle so that no air bubbles are entrapped in it. If preservative has been added, shake vigorously for 1 min. Maintain the hermetic seal on the sample bottle until time of analysis.

9.3 Experimental evidence indicates that some aromatic compounds, notably benzene, toluene, and ethyl benzene are susceptible to rapid biological degradation under certain environmental conditions.[3] Refrigeration alone may not be adequate to preserve these compounds in wastewaters for more than seven days. For this reason, a separate sample should be collected, acidified, and analyzed when these aromatics are to be determined. Collect about 500 mL of sample in a clean container. Adjust the pH of the sample to about 2 by adding 1+1 HCl while stirring vigorously, Check pH with narrow range (1.4 to 2.8) pH paper. Fill a sample container as described in Section 9.2.

9.4 All samples must be analyzed within 14 days of collection.[3]

10. Daily GC/MS Performance Tests

10.1 At the beginning of each day that analyses are to be performed, the GC/MS system must be checked to see if acceptable performance criteria are achieved for BFB.[9] The performance test must be passed before any samples, blanks, or standards are analyzed, unless the instrument has met the DFTPP test described in Method 625 earlier in the day.[10]

10.2 These performance tests require the following instrumental parameters:

Electron Energy: 70 V (nominal)
Mass Range: 20 to 260 amu
Scan Time: To give at least 5 scans per peak but not to exceed 7 s per scan.

10.3 At the beginning of each day, inject 2 µL of BFB solution directly on the column. Alternatively, add 2 µL of BFB solution to 5.0 mL of reagent water or standard solution and analyze the solution according to section 11. Obtain a background-corrected mass spectrum of BFB and confirm that all the key m/z criteria in Table 2 are achieved. If all the criteria are not achieved, the analyst must retune the mass spectrometer and repeat the test until all criteria are achieved.

11. Sample Purging and Gas Chromatography

11.1 Table 1 summarizes the recommended operating conditions for the gas chromatograph. Included in this table are retention times and MDL that can be achieved under these conditions. An example of the separations achieved by this column is shown in Figure 5. Other packed columns or chromatographic conditions may be used if the requirements of Section 8.2 are met.

11.2 After achieving the key m/z abundance criteria in Section 10, calibrate the system daiy as described in Section 7.

11.3 Adjust the purge gas (helium) flow rate to 40 mL/min. Attach the trap inlet to the purging device, and set the purge and trap system to purge (Figure 3). Open the syringe valve located on the purging device sample introduction needle.

11.4 Allow the sample to come to ambient temperature prior to introducing it into the syringe. Remove the plunger from a 5-mL syringe and attach a closed syringe valve. Open the sample bottle (or standard) and carefully pour the sample into the syringe barrel to just short of overflowing. Replace the syringe plunger and compress the sample. Open the syringe valve and vent any residual air while adjusting the sample volume to 5.0 mL. Since this process of taking an aliquot destroys the validity of the sample for future analysis, the analyst should fill a second syringe at this time to protect against possible loss of data. Add 10.0 µL of the surrogate spiking solution (Section 6.7) and 10.0 µL of the internal standard spiking solution (Section 7.3.2) through the valve bore, then close the valve. The surrogate and internal standards may be mixed and added as a single spiking solution.

11.5 Attach the syringe-syringe valve assembly to the syringe valve on the purging device. Open the syringe valves and inject the sample into the purging chamber.

11.6 Close both valves and purge the sample for 11.0 ±0.1 min at ambient temperature.

11.7 After the 11-min purge time, attach the trap to the chromatograph, adjust the purge and trap system to the desorb mode (Figure 4), and begin to temperature program the gas chromatograph. Introduce the trapped materials to the GC column by rapidly heating the trap to 180 °C while backflushing the trap with an inert gas between 20 and 60 mL/min for 4 min. If rapid heating of the trap cannot be achieved, the GC cloumn must be used as a secondary trap by cooling it to 30 °C (subambient temperature, if problems persist) instead of the initial program temperature of 45 °C.

11.8 While the trap is being desorbed into the gas chromatograph, empty the purging chamber using the sample introduction syringe. Wash the chamber with two 5-mL flushes of reagent water.

11.9 After desorbing the sample for 4 min, recondition the trap by returning the purge and trap system to the purge mode. Wait 15 s then close the syringe valve on the purging device to begin gas flow through the trap. The trap temperature should be maintained at 180 °C. After approximately 7 min, turn off the trap heater and open the syringe valve to stop the gas flow through the trap. When the trap is cool, the next sample can be analyzed.

11.10 If the response for any m/z exceeds the working range of the system, prepare a dilution of the sample with reagent water from the aliquot in the second syringe and reanalyze.

12. Qualitative Identification

12.1 Obtain EICPs for the primary m/z (Table 4) and at least two secondary masses for each parameter of interest. The following criteria must be met to make a qualitative identification:

12.1.1 The characteristic masses of each parameter of interest must maximize in the same or within one scan of each other.

12.1.2 The retention time must fall within ±30 s of the retention time of the authentic compound.

12.1.3 The relative peak heights of the three characteristic masses in the EICPs must fall within ±20% of the relative intensities of these masses in a reference mass spectrum. The reference mass spectrum can be obtained from a standard analyzed in the GC/MS system or from a reference library.

12.2 Structural isomers that have very similar mass spectra and less than 30 s difference in retention time, can be explicitly identified only if the resolution between authentic isomers in a standard mix is acceptable. Acceptable resolution is achieved if the baseline to valley height between the isomers is less than 25% of the sum of the two peak heights. Otherwise, structural isomers are identified as isomeric pairs.

13. Calculations

13.1 When a parameter has been identified, the quantitation of that parameter should be based on the integrated abundance from the EICP of the primary characteristic m/z given in Table 4. If the sample produces an interference for the primary m/z, use a secondary characteristic m/z to quantitate.

Calculate the concentration in the sample using the response factor (RF) determined in Section 7.3.3 and Equation 2.

$$\text{Concentration } (\mu\text{g/L}) = \frac{(A_s)(C_{is})}{(A_{is})(RF)}$$

Equation 2

where:

A_S=Area of the characteristic m/z for the parameter or surrogate standard to be measured.

A_{is}=Area of the characteristic m/z for the internal standard.

C_{is}=Concentration of the internal standard.

13.2 Report results in µg/L without correction for recovery data. All QC data obtained should be reported with the sample results.

14. Method Performance

14.1 The method detection limit (MDL) is defined as the minimum concentration of a substance that can be measured and reported with 99% confidence that the value is above zero.[1] The MDL concentrations listed in Table 1 were obtained using reagent water.[11] Similar results were achieved using representative wastewaters. The MDL actually achieved in a given analysis will vary depending on instrument sensitivity and matrix effects.

14.2 This method was tested by 15 laboratories using reagent water, drinking water, surface water, and industrial wastewaters spiked at six concentrations over the range 5–600 μg/L.[12] Single operator precision, overall precision, and method accuracy were found to be directly related to the concentration of the parameter and essentially independent of the sample matrix. Linear equations to describe these relationships are presented in Table 5.

REFERENCES

1. 40 CFR part 136, appendix B.

2. Bellar, T.A., and Lichtenberg, J.J. ''Determining Volatile Organics at Microgram-per-Litre Levels by Gas Chromatography,'' *Journal American Water Works Association, 66,* 739 (1974).

3. Bellar, T.A., and Lichtenberg, J.J. ''Semi-Automated Headspace Analysis of Drinking Waters and Industrial Waters for Purgeable Volatile Organic Compounds, '' Measurement of Organic Pollutants in Water and Wastewater, C.E. Van Hall, editor, American Society for Testing and Materials, Philadelphia, PA. Special Technical Publication 686, 1978.

4. ''Carcinogens—Working With Carcinogens,'' Department of Health, Education, and Welfare, Public Health Service, Center for Disease Control, National Institute for Occupational Safety and Health, Publication No. 77–206, August 1977.

5. ''OSHA Safety and Health Standards, General Industry,'' (29 CFR part 1910), Occupational Safety and Health Administration, OSHA 2206 (Revised, January 1976).

6. ''Safety in Academic Chemistry Laboratories,'' American Chemical Society Publication, Committee on Chemical Safety, 3rd Edition, 1979.

7. Provost, L.P., and Elder, R.S. ''Interpretation of Percent Recovery Data,'' *American Laboratory, 15,* 58–63 (1983). (The value 2.44 used in the equation in Section 8.2.3 is two times the value 1.22 derived in this report.)

8. ''Methods 330.4 (Titrimetric, DPD-FAS) and 330.5 (Spectrophotometric, DPD) for Chlorine, Total Residual,'' Methods for Chemical Analysis of Water and Wastes, EPA–600/4–79–020, U.S. Environmental Protection Agency, Environmental Monitoring and Support Laboratory, Cincinnati, Ohio 45268, March 1979.

9. Budde, W.L., and Eichelberger, J.W. ''Performance Tests for the Evaluation of Computerized Eas Chromatography/Mass Spectrometry Equipment and Laboratories,'' EPA–600/4–80–025, U.S. Environmental Protection Agency, Environmental Monitoring and Support Laboratory, Cincinnati, Ohio 45268, April 1980.

10. Eichelberger, J.W., Harris, L.E., and Budde, W.L. ''Reference Compound to Calibrate Ion Abundance Measurement in Gas Chromatography—Mass Spectrometry Systems,'' *Analytical Chemistry, 47,* 995–1000 (1975).

11. ''Method Detection Limit for Methods 624 and 625,'' Olynyk, P., Budde, W.L., and Eichelberger, J.W. Unpublished report, May 14, 1980.

12. ''EPA Method Study 29 EPA Method 624—Purgeables,'' EPA 600/4–84–054, National Technical Information Service, PB84–209915, Springfield, Virginia 22161, June 1984.

13.''Method Performance Data for Method 624,'' Memorandum from R. Slater and T. Pressley, U.S. Environmental Protection Agency, Environmental Monitoring and Support Laboratory, Cincinnati, Ohio 45268, January 17, 1984.

TABLE 1—CHROMATOGRAPHIC CONDITIONS AND METHOD DETECTION LIMITS

Parameter	Retention time (min)	Method detection limit (μg/L)
Chloromethane	2.3	nd
Bromomethane	3.1	nd
Vinyl chloride	3.8	nd
Chloroethane	4.6	nd
Methylene chloride	6.4	2.8
Trichlorofluoromethane	8.3	nd
1,1-Dichloroethene	9.0	2.8
1,1-Dichloroethane	10.1	4.7
trans-1,2-Dichloroethene	10.8	1.6
Chloroform	11.4	1.6
1,2-Dichloroethane	12.1	2.8
1,1,1-Trichloroethane	13.4	3.8
Carbon tetrachloride	13.7	2.8
Bromodichloromethane	14.3	2.2
1,2-Dichloroproane	15.7	6.0
cis-1,3-Dichloropropene	15.9	5.0
Trichloroethene	16.5	1.9
Benzene	17.0	4.4
Dibromochloromethane	17.1	3.1
1,1,2-Trichloroethane	17.2	5.0
trans-1,3-Dichloropropene	17.2	nd
2-Chloroethylvinlyl ether	18.6	nd
Bromoform	19.8	4.7
1,1,2,2-Tetrachloroethane	22.1	6.9
Tetrachloroethene	22.2	4.1
Toluene	23.5	6.0
Chlorobenzene	24.6	6.0
Ethyl benzene	26.4	7.2
1,3-Dichlorobenzene	33.9	nd
1,2-Dichlorobenzene	35.0	nd

TABLE 1—CHROMATOGRAPHIC CONDITIONS AND METHOD DETECTION LIMITS—Continued

Parameter	Retention time (min)	Method detection limit (µg/L)
1,4-Dichlorobenzene	35.4	nd

Column conditions: Carbopak B (60/80 mesh) coated with 1% SP–1000 packed in a 6 ft by 0.1 in. ID glass column with helium carrier gas at 30 mL/min. flow rate. Column temperature held at 45°C for 3 min., then programmed at 8°C/min. to 220°C and held for 15 min.

nd=not determined.

TABLE 2—BFB KEY M/Z ABUNDANCE CRITERIA

Mass	m/z Abundance criteria
50	15 to 40% of mass 95.
75	30 to 60% of mass 95.
95	Base Peak, 100% Relative Abundance.
96	5 to 9% of mass 95.
173	<2% of mass 174.
174	>50% of mass 95.
175	5 to 9% of mass 174.
176	>95% but <101% of mass 174.
177	5 to 9% of mass 176.

TABLE 3—SUGGESTED SURROGATE AND INTERNAL STANDARDS

Compound	Retention time (min)[a]	Primary m/z	Secondary masses
Benzene d-6	17.0	84	
4-Bromofluorobenzene	28.3	95	174, 176
1,2-Dichloroethane d-4	12.1	102	
1,4-Difluorobenzene	19.6	114	63, 88
Ethylbenzene d-5	26.4	111	
Ethylbenzene d-10	26.4	98	
Fluorobenzene	18.4	96	70
Pentafluorobenzene	23.5	168	
Bromochloromethane	9.3	128	49, 130, 51
2-Bromo-1-chloropropane	19.2	77	79, 156
1, 4-Dichlorobutane	25.8	55	90, 92

[a] For chromatographic conditions, see Table 1.

TABLE 4—CHARACTERISTIC MASSES FOR PURGEABLE ORGANICS

Parameter	Primary	Secondary
Chloromethane	50	52.
Bromomethane	94	96.
Vinyl chloride	62	64.
Chloroethane	64	66.
Methylene chloride	84	49, 51, and 86.
Trichlorofluoromethane	101	103.
1,1-Dichloroethene	96	61 and 98.
1,1-Dichloroethane	63	65, 83, 85, 98, and 100.
trans-1,2-Dichloroethene	96	61 and 98.
Chloroform	83	85.
1,2-Dichloroethane	98	62, 64, and 100.
1,1,1-Trichloroethane	97	99, 117, and 119.
Carbon tetrachloride	117	119 and 121.
Bromodichloromethane	127	83, 85, and 129.
1,2-Dichloropropane	112	63, 65, and 114.
trans-1,3-Dichloropropene	75	77.
Trichloroethene	130	95, 97, and 132.
Benzene	78	
Dibromochloromethane	127	129, 208, and 206.
1,1,2-Trichloroethane	97	83, 85, 99, 132, and 134.
cis-1,3-Dichloropropene	75	77.
2-Chloroethylvinyl ether	106	63 and 65.
Bromoform	173	171, 175, 250, 252, 254, and 256.
1,1,2,2-Tetrachloroethane	168	83, 85, 131, 133, and 166.
Tetrachloroethene	164	129, 131, and 166.
Toluene	92	91.
Chlorobenzene	112	114.
Ethyl benzene	106	91.
1,3-Dichlorobenzene	146	148 and 113.
1,2-Dichlorobenzene	146	148 and 113.
1,4-Dichlorobenzene	146	148 and 113.

TABLE 5—CALIBRATION AND QC ACCEPTANCE CRITERIA—METHOD 624 [A]

Parameter	Range for Q (µ/g/L)	Limit for s (µ/g/L)	Range for $\bar{X}$ (µ/g/L)	Range for P, P_s (%)
Benzene	12.8 – 27.2	6.9	15.2 – 26.0	37 – 151
Bromodichloromethane	13.1 – 26.9	6.4	10.1 – 28.0	35 – 155
Bromoform	14.2 – 25.8	5.4	11.4 – 31.1	45 – 169
Bromomethane	2.8 – 37.2	17.9	D – 41.2	D – 242
Carbon tetrachloride	14.6 – 25.4	5.2	17.2 – 23.5	70 – 140
Chlorobenzene	13.2 – 26.8	6.3	16.4 – 27.4	37 – 160
Chloroethane	7.6 – 32.4	11.4	8.4 – 40.4	14 – 230
2-Chloroethylvinyl ether	D – 44.8	25.9	D – 50.4	D – 305
Chloroform	13.5 – 26.5	6.1	13.7 – 24.2	51 – 138
Chloromethane	D – 40.8	19.8	D – 45.9	D – 273
Dibromochloromethane	13.5 – 26.5	6.1	13.8 – 26.6	53 – 149
1,2-Dichlorobenzene	12.6 – 27.4	7.1	11.8 – 34.7	18 – 190
1,3-Dichlorobenzene	14.6 – 25.4	5.5	17.0 – 28.8	59 – 156
1,4-Dichlorobenzene	12.6 – 27.4	7.1	11.8 – 34.7	18 – 190
1,1-Dichloroethane	14.5 – 25.5	5.1	14.2 – 28.5	59 – 155
1,2-Dichloroethane	13.6 – 26.4	6.0	14.3 – 27.4	49 – 155
1,1-Dichlorothene	10.1 – 29.9	9.1	3.7 – 42.3	D – 234
trans-1,2-Dichloroethene	13.9 – 26.1	5.7	13.6 – 28.5	54 – 156

TABLE 5—CALIBRATION AND QC ACCEPTANCE CRITERIA—METHOD 624 [A]—Continued

Parameter	Range for Q (μ/g/L)	Limit for s (μ/g/L)	Range for $\bar{X}$ (μ/g/L)	Range for P, P_s (%)
1,2-Dichloropropane	6.8 − 33.2	13.8	3.8 − 36.2	D − 210
cis-1,3-Dichloropropene	4.8 − 35.2	15.8	1.0 − 39.0	D − 227
trans-1,3-Dichloropropene	10.0 − 30.0	10.4	7.6 − 32.4	17 − 183
Ethyl benzene	11.8 − 28.2	7.5	17.4 − 26.7	37 − 162
Methylene chloride	12.1 − 27.9	7.4	D − 41.0	D − 221
1,1,2,2-Tetrachloroethane	12.1 − 27.9	7.4	13.5 − 27.2	46 − 157
Tetrachloroethene	14.7 − 25.3	5.0	17.0 − 26.6	64 − 148
Toluene	14.9 − 25.1	4.8	16.6 − 26.7	47 − 150
1,1,1-Trichloroethane	15.0 − 25.0	4.6	13.7 − 30.1	52 − 162
1,1,2-Trichloroethane	14.2 − 25.8	5.5	14.3 − 27.1	52 − 150
Trichloroethene	13.3 − 26.7	6.6	18.6 − 27.6	71 − 157
Trichlorofluoromethane	9.6 − 30.4	10.0	8.9 − 31.5	17 − 181
Vinyl chloride	0.8 − 39.2	20.0	D − 43.5	D − 251

Q= Concentration measured in QC check sample, in μg/L (Section 7.5.3).
s= Standard deviation of four recovery measurements, in μg/L (Section 8.2.4).
$\bar{X}$= Average recovery of four recovery measurements, in μg/L (Section 8.2.4).
P, P_s= Percent recovery measured, (Section 8.3.2, Section 8.4.2).
D= Detected; result must be greater than zero.
[a] Criteria were calculated assuming a QC check sample concentration of 20 μg/L.

NOTE: These criteria are based directly upon the method performance data in Table 6. Where necessary, the limits for recovery have been broadened to assure applicability of the limits to concentrations below those used to develop Table 6.

TABLE 6—METHOD ACCURACY AND PRECISION AS FUNCTIONS OF CONCENTRATION—METHOD 624

Parameter	Accuracy, as recovery, X′ (μg/L)	Single analyst precision, s_r′ (μg/L)	Overall precision, S′ (μg/L)
Benzene	0.93C+2.00	$0.26\bar{X}-1.74$	$0.25\bar{X}-1.33$
Bromodichloromethane	1.03C − 1.58	$0.15\bar{X}+0.59$	$0.20\bar{X}+1.13$
Bromoform	1.18C − 2.35	$0.12\bar{X}+0.36$	$0.17\bar{X}+1.38$
Bromomethane [a]	1.00C	$0.43\bar{X}$	$0.58\bar{X}$
Carbon tetrachloride	1.10C − 1.68	$0.12\bar{X}+0.25$	$0.11\bar{X}+0.37$
Chlorobenzene	0.98C+2.28	$0.16\bar{X}-0.09$	$0.26\bar{X}-1.92$
Chloroethane	1.18C+0.81	$0.14\bar{X}+2.78$	$0.29\bar{X}+1.75$
2–Chloroethylvinyl ether [a]	1.00C	$0.62\bar{X}$	$0.84\bar{X}$
Chloroform	0.93C+0.33	$0.16\bar{X}+0.22$	$0.18\bar{X}+0.16$
Chloromethane	1.03C+0.81	$0.37\bar{X}+2.14$	$0.58\bar{X}+0.43$
Dibromochloromethane	1.01C − 0.03	$0.17\bar{X}-0.18$	$0.17\bar{X}+0.49$
1,2–Dichlorobenzene [b]	0.94C+4.47	$0.22\bar{X}-1.45$	$0.30\bar{X}-1.20$
1,3–Dichlorobenzene	1.06C+1.68	$0.14\bar{X}-0.48$	$0.18\bar{X}-0.82$
1,4–Dichlorobenzene [b]	0.94C+4.47	$0.22\bar{X}-1.45$	$0.30\bar{X}-1.20$
1,1–Dichloroethane	1.05C+0.36	$0.13\bar{X}-0.05$	$0.16\bar{X}+0.47$
1,2–Dichloroethane	1.02C+0.45	$0.17\bar{X}-0.32$	$0.21\bar{X}-0.38$
1,1–Dichloroethene	1.12C+0.61	$0.17\bar{X}+1.06$	$0.43\bar{X}-0.22$
trans–1,2,–Dichloroethene	1.05C+0.03	$0.14\bar{X}+0.09$	$0.19\bar{X}+0.17$
1,2–Dichloropropane [a]	1.00C	$0.33\bar{X}$	$0.45\bar{X}$
cis–1,3–Dichloropropene [a]	1.00C	$0.38\bar{X}$	$0.52\bar{X}$
trans–1,3–Dichloropropene [a]	1.00C	$0.25\bar{X}$	$0.34\bar{X}$
Ethyl benzene	0.98C+2.48	$0.14\bar{X}+1.00$	$0.26\bar{X}-1.72$
Methylene chloride	0.87C+1.88	$0.15\bar{X}+1.07$	$0.32\bar{X}+4.00$
1,1,2,2–Tetrachloroethane	0.93C+1.76	$0.16\bar{X}+0.69$	$0.20\bar{X}+0.41$
Tetrachloroethene	1.06C+0.60	$0.13\bar{X}-0.18$	$0.16\bar{X}-0.45$
Toluene	0.98C+2.03	$0.15\bar{X}-0.71$	$0.22\bar{X}-1.71$
1,1,1–Trichloroethane	1.06C+0.73	$0.12\bar{X}-0.15$	$0.21\bar{X}-0.39$
1,1,2–Trichloroethane	0.95C+1.71	$0.14\bar{X}+0.02$	$0.18\bar{X}+0.00$
Trichloroethene	1.04C+2.27	$0.13\bar{X}+0.36$	$0.12\bar{X}+0.59$
Trichloroflouromethane	0.99C+0.39	$0.33\bar{X}-1.48$	$0.34\bar{X}-0.39$
Vinyl chloride	1.00C	$0.48\bar{X}$	$0.65\bar{X}$

$\bar{X}$′=Expected recovery for one or more measurements of a sample containing a concentration of C, in μg/L.
S^r=Expected single analyst standard deviation of measurements at an average concentration found of$\bar{X}$, in μg/L.
S′=Expected interlaboratory standard deviation of measurements at an average concentration found of$\bar{X}$, in μg/L.
C=True value for the concentration, in μg/L.
$\bar{X}$=Average recovery found for measurements of samples containing a concentration of C, in μg/L.
[a] Estimates based upon the performance in a single laboratory. [13]
[b] Due to chromatographic resolution problems, performance statements for these isomers are based upon the sums of their concentrations.

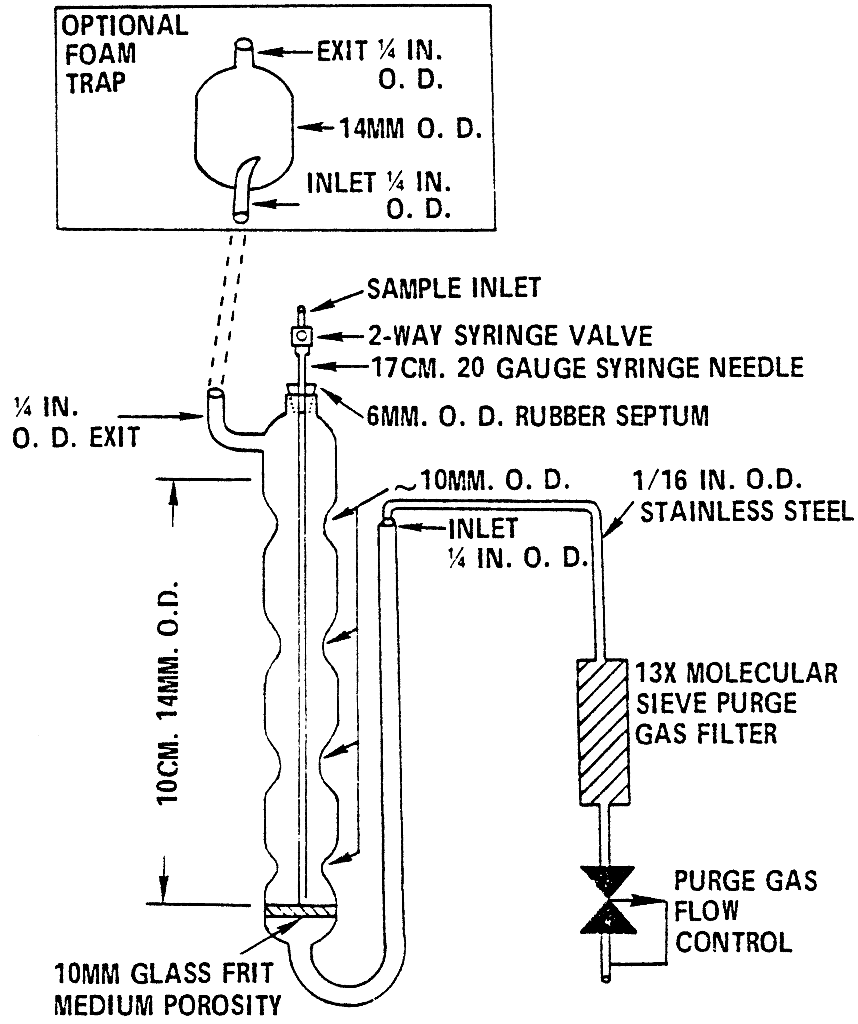

Figure 1. Purging device.

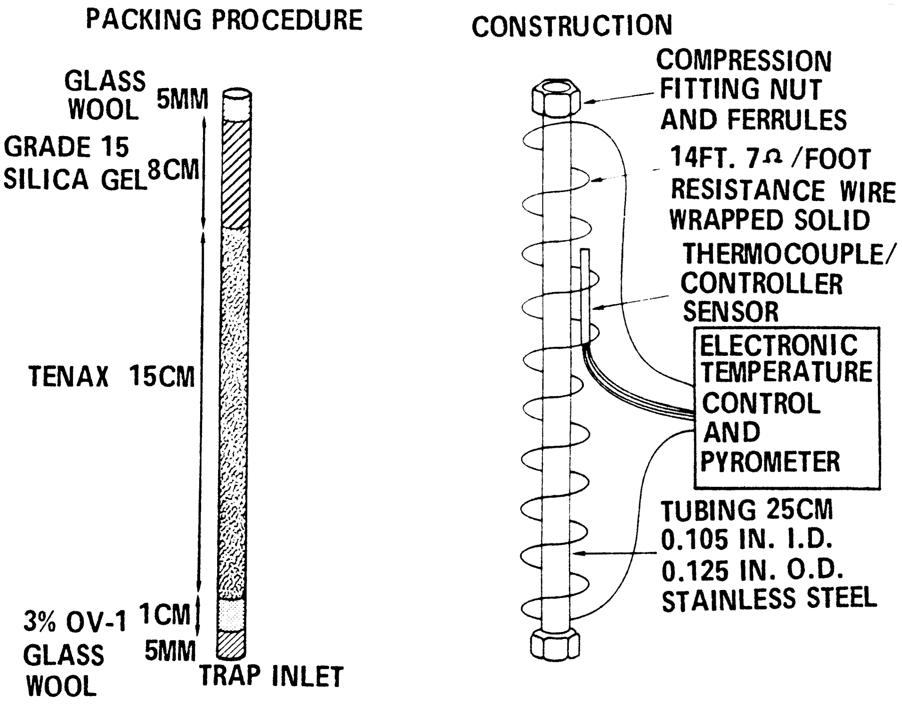

Figure 2. Trap packings and construction to include desorb capability.

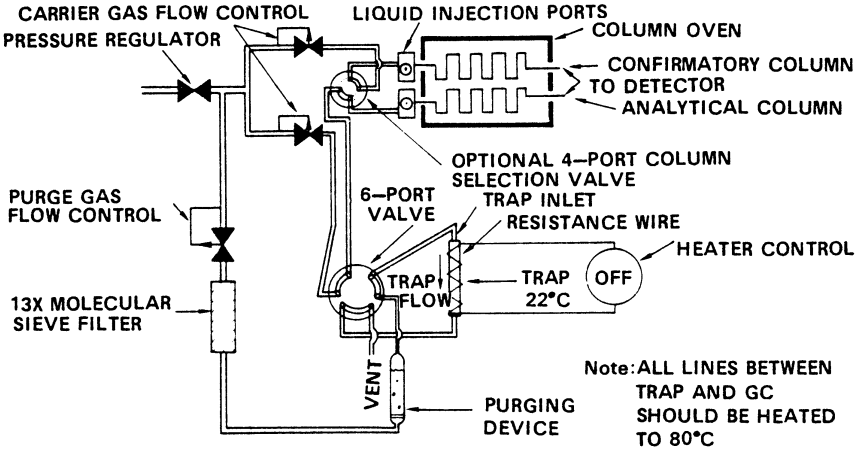

Figure 3. Purge and trap system - purge mode.

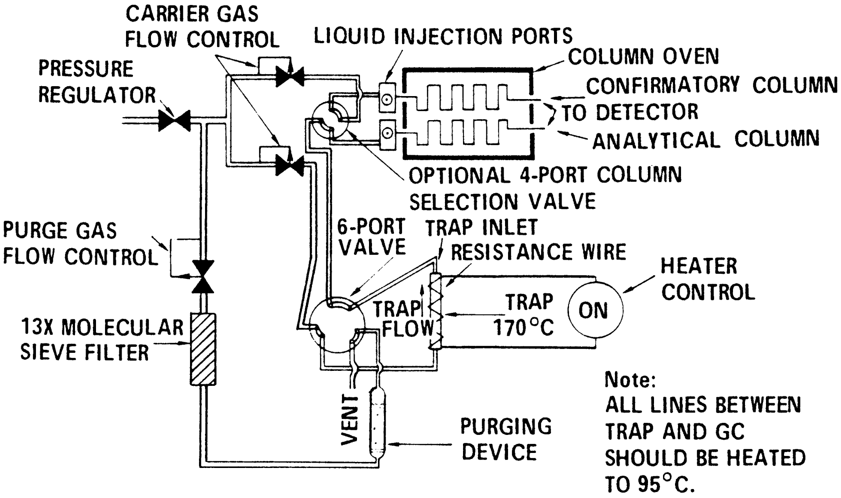

Figure 4. Purge and trap system - desorb mode.

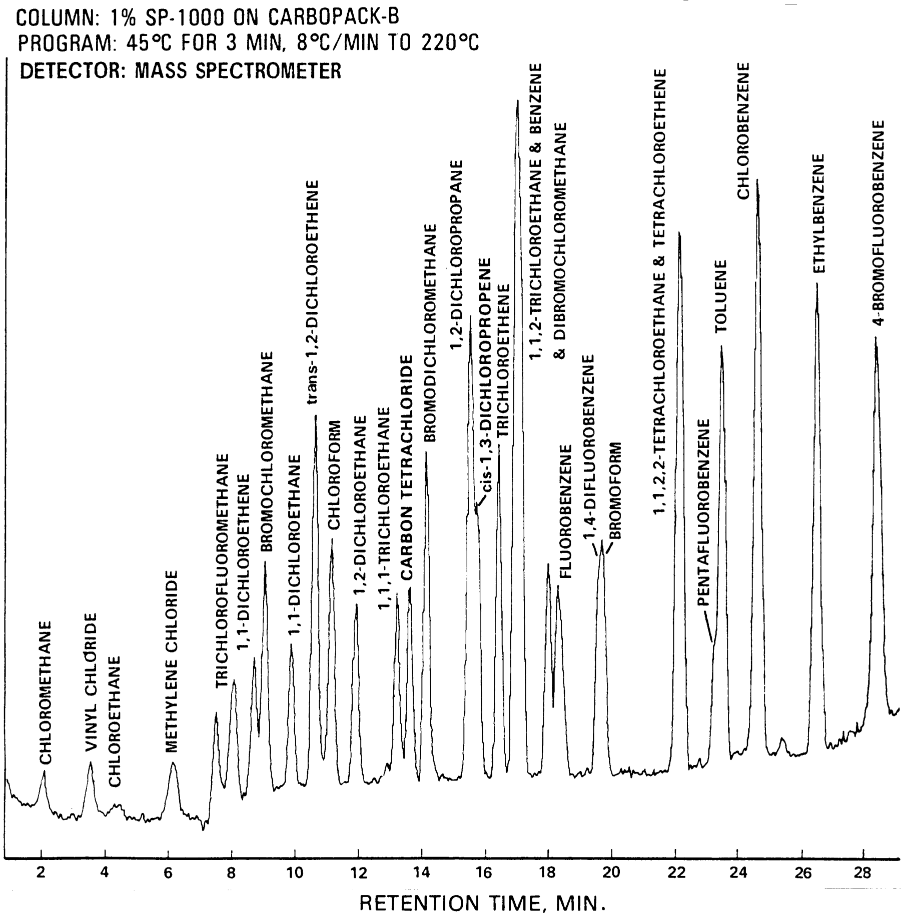

Figure 5. Gas chromatogram of volatile organics.

METHOD 625—BASE/NEUTRALS AND ACIDS

1. Scope and Application

1.1 This method covers the determination of a number of organic compounds that are partitioned into an organic solvent and are amenable to gas chromatography. The parameters listed in Tables 1 and 2 may be qualitatively and quantitatively determined using this method.

1.2 The method may be extended to include the parameters listed in Table 3. Benzidine can be subject to oxidative losses during solvent concentration. Under the alkaline conditions of the extraction step, α–BHC, γ–BHC, endosulfan I and II, and endrin are subject to decomposition. Hexachlorocyclopentadiene is subject to thermal decomposition in the inlet of the gas chromatograph, chemical reaction in acetone solution, and photochemical decomposition. N-nitrosodimethylamine is difficult to separate from the solvent under the chromatographic conditions described. N-nitrosodiphenylamine decomposes in the gas chromatographic inlet and cannot be separated from diphenylamine. The preferred method for each of these parameters is listed in Table 3.

1.3 This is a gas chromatographic/mass spectrometry (GC/MS) method[2,14] applicable to the determination of the compounds listed in Tables 1, 2, and 3 in municipal and industrial discharges as provided under 40 CFR 136.1.

1.4 The method detection limit (MDL, defined in Section 16.1)[1] for each parameter is listed in Tables 4 and 5. The MDL for a specific wastewater may differ from those listed, depending upon the nature of interferences in the sample matrix.

1.5 Any modification to this method, beyond those expressly permitted, shall be considered as a major modification subject to application and approval of alternate test procedures under 40 CFR 136.4 and 136.5. Depending upon the nature of the modification and the extent of intended use, the applicant may be required to demonstrate that the modifications will produce equivalent results when applied to relevant wastewaters.

1.6 This method is restricted to use by or under the supervision of analysts experienced in the use of a gas chromatograph/mass spectrometer and in the interpretation of mass spectra. Each analyst must demonstrate the ability to generate acceptable results with this method using the procedure described in Section 8.2.

2. Summary of Method

2.1 A measured volume of sample, approximately 1–L, is serially extracted with methylene chloride at a pH greater than 11 and again at a pH less than 2 using a separatory funnel or a continuous extractor.[2] The methylene chloride extract is dried, concentrated to a volume of 1 mL, and analyzed by GC/MS. Qualitative identification of the parameters in the extract is performed using the retention time and the relative abundance of three characteristic masses (m/z). Quantitative analysis is performed using internal standard techniques with a single characteristic m/z.

3. Interferences

3.1 Method interferences may be caused by contaminants in solvents, reagents, glassware, and other sample processing hardware that lead to discrete artifacts and/or elevated baselines in the total ion current profiles. All of these materials must be routinely demonstrated to be free from interferences under the conditions of the analysis by running laboratory reagent blanks as described in Section 8.1.3.

3.1.1 Glassware must be scrupulously cleaned.[3] Clean all glassware as soon as possible after use by rinsing with the last solvent used in it. Solvent rinsing should be followed by detergent washing with hot water, and rinses with tap water and distilled water. The glassware should then be drained dry, and heated in a muffle furnace at 400 °C for 15 to 30 min. Some thermally stable materials, such as PCBs, may not be eliminated by this treatment. Solvent rinses with acetone and pesticide quality hexane may be substituted for the muffle furnace heating. Thmrough rinsing with such solvents usually eliminates PCB interference. Volumetric ware should not be heated in a muffle furnace. After drying and cooling, glassware should be sealed and stored in a clean environment to prevent any accumulation of dust or other contaminants. Store inverted or capped with aluminum foil.

3.1.2 The use of high purity reagents and solvents helps to minimize interference problems. Purification of solvents by distillation in all-glass systems may be required.

3.2 Matrix interferences may be caused by contaminants that are co-extracted from the sample. The extent of matrix interferences will vary considerably from source to source, depending upon the nature and diversity of the industrial complex or municipality being sampled.

3.3 The base-neutral extraction may cause significantly reduced recovery of phenol, 2-methylphenol, and 2,4-dimethylphenol. The analyst must recognize that results obtained under these conditions are minimum concentrations.

3.4 The packed gas chromatographic columns recommended for the basic fraction may not exhibit sufficient resolution for certain isomeric pairs including the following: anthracene and phenanthrene; chrysene and benzo(a)anthracene; and benzo(b)fluoranthene and benzo(k)fluoranthene. The gas chromatographic retention time and mass spectra for these pairs of compounds are not sufficiently different to make an unambiguous identification. Alternative techniques should be used to identify and quantify these specific compounds, such as Method 610.

3.5 In samples that contain an inordinate number of interferences, the use of chemical ionization (CI) mass spectrometry may make identification easier. Tables 6 and 7 give characteristic CI ions for most of the compounds covered by this method. The use of CI mass spectrometry to support electron ionization (EI) mass spectrometry is encouraged but not required.

4. Safety

4.1 The toxicity or carcinogenicity of each reagent used in this method have not been precisely defined; however, each chemical compound should be treated as a potential health hazard. From this viewpoint, exposure to these chemicals must be reduced to the lowest possible level by whatever means available. The laboratory is responsible for maintaining a current awareness file of OSHA regulations regarding the safe handling of the chemicals specified in this method. A reference file of material data handling sheets should also be made available to all personnel involved in the chemical analysis. Additional references to laboratory safety are available and have been identified[4-6] for the information of the analyst.

4.2 The following parameters covered by this method have been tentatively classified as known or suspected, human or mammalian carcinogens: benzo(a)anthracene, benzidine, 3,3′-dichlorobenzidine, benzo(a)pyrene, α-BHC, β-BHC, δ-BHC, γ-BHC, dibenzo(a,h)anthracene, N-nitrosodimethylamine, 4,4′-DDT, and polychlorinated biphenyls (PCBs). Primary standards of these toxic compounds should be prepared in a hood. A NIOSH/MESA approved toxic gas respirator should be worn when the analyst handles high concentrations of these toxic compounds.

5. Apparatus and Materials

5.1 Sampling equipment, for discrete or composit sampling.

5.1.1 Grab sample bottle—1-L or 1-gt, amber glass, fitted with a screw cap lined with Teflon. Foil may be substituted for Teflon if the sample is not corrosive. If amber bottles are not available, protect samples from light. The bottle and cap liner must be washed, rinsed with acetone or methylene chloride, and dried before use to minimize contamination.

5.1.2 Automatic sampler (optional)—The sampler must incorporate glass sample containers for the collection of a minimum of 250 mL of sample. Sample containers must be kept refrigerated at 4 °C and protected from light during compositing. If the sampler uses a peristaltic pump, a minimum length of compressible silicone rubber tubing may be used. before use, however, the compressible tubing should be throughly rinsed with methanol, followed by repeated rinsings with distilled water to minimize the potential for contamination of the sample. An integrating flow meter is required to collect flow proportional composites.

5.2 Glassware (All specifications are suggested. Catalog numbers are included for illustration only.):

5.2.1 Separatory funnel—2–L, with Teflon stopcock.

5.2.2 Drying column—Chromatographic column, 19 mm ID, with coarse frit

5.2.3 Concentrator tube, Kuderna-Danish—10-mL, graduated (Kontes K–570050–1025 or equivalent). Calibration must be checked at the volumes employed in the test. Ground glass stopper is used to prevent evaporation of extracts.

5.2.4 Evaporative flask, Kuderna-Danish—500-mL (Kontes K–57001–0500 or equivalent). Attach to concentrator tube with springs.

5.2.5 Snyder column, Kuderna-Danish—Three all macro (Kontes K–503000–0121 or equivalent).

5.2.6 Snyder column, Kuderna-Danish—Two-ball macro (Kontes K–569001–0219 or equivalent).

5.2.7 Vials—10 to 15-mL, amber glass, with Teflon-lined screw cap.

5.2.8 Continuous liquid—liquid extractor—Equipped with Teflon or glass connecting joints and stopcocks requiring no lubrication. (Hershberg-Wolf Extractor, Ace Glass Company, Vineland, N.J., P/N 6841–10 or equivalent.)

5.3 Boiling chips—Approximately 10/40 mesh. Heat to 400 °C for 30 min of Soxhlet extract with methylene chloride.

5.4 Water bath—Heated, with concentric ring cover, capable of temperature control (±2°C). The bath should be used in a hood.

5.5 Balance—Analytical, capable of accurately weighing 0.0001 g.

5.6 GC/MS system:

5.6.1 Gas Chromatograph—An analytical system complete with a temperature programmable gas chromatograph and all required accessores including syringes, analytical columns, and gases. The injection port must be designed for on-column injection when using packed columns and for splitless injection when using capillary columns.

5.6.2 Column for base/neutrals—1.8 m long × 2 mm ID glass, packed with 3% SP–2250 on Supelcoport (100/120 mesh) or equivalent. This column was used to develop the method performance statements in Section 16. Guidelines for the use of alternate column packings are provided in Section 13.1.

5.6.3 Column for acids—1.8 m long × 2 mm ID glass, packed with 1% SP–1240DA on Supelcoport (100/120 mesh) or equivalent. This column was used to develop the method performance statements in Section 16. Guidelines for the use of alternate column packings are given in Section 13.1.

5.6.4 Mass spectrometer—Capable of scanning from 35 to 450 amu every 7 s or less, utilizing a 70 V (nominal) electron energy in the electron impact ionization mode, and producing a mass spectrum which meets all the criteria in Table 9 when 50 ng of decafluorotriphenyl phosphine (DFTPP; bis(perfluorophenyl) phenyl phosphine) is injected through the GC inlet.

5.6.5 GC/MS interface—Any GC to MS interface that gives acceptable calibration points at 50 ng per injection for each of the parameters of interest and achieves all acceptable performance criteria (Section 12) may be used. GC to MS interfaces constructed of all glass or glass-lined materials are recommended. Glass can be deactivated by silanizing with dichlorodimethylsilane.

5.6.6 Data system—A computer system must be interfaced to the mass spectrometer that allows the contiluous acquisition and storage on machine-readable media of all mass spectra obtained throughout the duration of the chromatographic program. The computer must have software that allows searching any GC/MS data file for specific m/z and plotting such m/z abundances versus time or scan number. This type of plot is defined as an Extracted Ion Current Profile (EICP). Software must also be available that allows integrating the abundance in any EICP between specified time or scan number limits.

6. Reagents

6.1 Reagent water—Reagent water is defined as a water in which an interferent is not observed at the MDL of the parameters of interest.

6.2 Sodium hydroxide solution (10 N)—Dissolve 40 g of NaOH (ACS) in reagent water and dilute to 100 mL.

6.3 Sodium thiosulfate—(ACS) Granular.

6.4 Sulfuric acid (1+1)—Slowly, add 50 mL of H_2SO_4 (ACS, sp. gr. 1.84) to 50 mL of reagent water.

6.5 Acetone, methanol, methlylene chloride—Pesticide quality or equivalent.

6.6 Sodium sulfate—(ACS) Granular, anhydrous. Purify by heating at 400 °C for 4 h in a shallow tray.

6.7 Stock standard solutions (1.00 μg/μL)—standard solutions can be prepared from pure standard materials or purchased as certified solutions.

6.7.1 Prepare stock standard solutions by accurately weighing about 0.0100 g of pure material. Dissolve the material in pesticide quality acetone or other suitable solvent and dilute to volume in a 10-mL volumetric flask. Larger volumes can be used at the convenience of the analyst. When compound purity is assayed to be 96% or greater, the weight may be used without correction to calculate the concentration of the stock standard. Commercially prepared stock standards may be used at any concentration if they are certified by the manufacturer or by an independent source.

6.7.2 Transfer the stock standard solutions into Teflon-sealed screw-cap bottles. Store at 4 °C and protect from light. Stock standard solutions should be checked frequently for signs of degradation or evaporation, especially just prior to preparing calibration standards from them.

6.7.3 Stock standard solutions must be replaced after six months, or sooner if comparison with quality control check samples indicate a problem.

6.8 Surrogate standard spiking solution—Select a minimum of three surrogate compounds from Table 8. Prepare a surrogate standard spiking solution containing each selected surrogate compound at a concentration of 100 μg/mL in acetone. Addition of 1.00 mL of this solution to 1000 mL of sample is equivalent to a concentration of 100 μg/L of each surrogate standard. Store the spiking solution at 4 °C in Teflon-sealed glass container. The solution should be checked frequently for stability. The solution must be replaced after six months, or sooner if comparison with quality control check standards indicates a problem.

6.9 DFTPP standard—Prepare a 25 μg/mL solution of DFTPP in acetone.

6.10 Quality control check sample concentrate—See Section 8.2.1.

7. Calibration

7.1 Establish gas chromatographic operating parameters equivalent to those indicated in Table 4 or 5.

7.2 Internal standard calibration procedure—To use this approach, the analyst must select three or more internal standards that are similar in analytical behavior to the compounds of interest. The analyst must further demonstrate that the measurement of the internal standards is not affected by method or matrix interferences. Some recommended internal standards are listed in Table 8. Use the base peak m/z as the primary m/z for quantification of the standards. If interferences are noted, use one of the next two most intense m/z quantities for quantification.

7.2.1 Prepare calibration standards at a minimum of three concentration levels for each parameter of interest by adding appropriate volumes of one or more stock standards to a volumetric flask. To each calibration standard or standard mixture, add a known constant amount of one or more internal standards, and dilute to volume with acetone. One of the calibration standards should be at a concentration near, but above, the MDL and the other concentrations should correspond to the expected range of concentrations found in real samples or should define the working range of the GC/MS system.

7.2.2 Using injections of 2 to 5 μL, analyze each calibration standard according to Section 13 and tabulate the area of the primary characteristic m/z (Tables 4 and 5) against concentration for each compound and internal standard. Calculate response factors (RF) for each compound using Equation 1.

$$RF = \frac{(A_s)(C_{is})}{(A_{is})(C_s)}$$

Equation 1

where:

A_s=Area of the characteristic m/z for the parameter to be measured.

A_{is}=Area of the characteristic m/z for the internal standard.

C_{is}=Concentration of the internal standard (μg/L).

C_s=Concentration of the parameter to be measured (μg/L).

If the RF value over the working range is a constant (<35% RSD), the RF can be assumed to be invariant and the average RF can be used for calculations. Alternatively, the results can be used to plot a calibration curve of response ratios, A_s/A_{is}, vs. RF.

7.3 The working calibration curve or RF must be verified on each working day by the measurement of one or more calibration standards. If the response for any parameter varies from the predicted response by more than ±20%, the test must be repeated using a fresh calibration standard. Alternatively, a new calibration curve must be prepared for that compound.

8. Quality Control

8.1 Each laboratory that uses this method is required to operate a formal quality control program. The minimum requirements of this program consist of an initial demonstration of laboratory capability and an ongoing analysis of spiked samples to evaluate and document data quality. The laboratory must maintain records to document the quality of data that is generated. Ongoing data quality checks are compared with established performance criteria to determine if the results of analyses meet the performance characteristics of the method. When results of sample spikes indicate atypical method performance, a quality control check standard must be analyzed to confirm that the measurements were performed in an in-control mode of operation.

8.1.1 The analyst must make an initial, one-time, demonstration of the ability to generate acceptable accuracy and precision with this method. This ability is established as described in Section 8.2.

8.1.2 In recognition of advances that are occuring in chromatography, the analyst is permitted certain options (detailed in Sections 10.6 and 13.1) to improve the separations or lower the cost of measurements. Each time such a modification is made to the method, the analyst is required to repeat the procedure in Section 8.2.

8.1.3 Before processing any samples, the analyst must analyze a reagent water blank to demonstrate that interferences from the analytical system and glassware are under control. Each time a set of samples is extracted or reagents are changed, a reagent water blank must be processed as a safeguard against laboratory contamination.

8.1.4 The laboratory must, on an ongoing basis, spike and analyze a minimum of 5% of all samples to monitor and evaluate laboratory data quality. This procedure is described in Section 8.3.

8.1.5 The laboratory must, on an ongoing basis, demonstrate through the analyses of quality control check standards that the operation of the measurement system is in control. This procedure is described in Section 8.4. The frequency of the check standard analyses is equivalent to 5% of all samples analyzed but may be reduced if spike recoveries from samples (Section 8.3) meet all specified quality control criteria.

8.1.6 The laboratory must maintain performance records to document the quality of data that is generated. This procedure is described in Section 8.5.

8.2 To establish the ability to generate acceptable accuracy and precision, the analyst must perform the following operations.

8.2.1 A quality control (QC) check sample concentrate is required containing each parameter of interest at a concentration of 100 μg/mL in acetone. Multiple solutions may be required. PCBs and multicomponent pesticides may be omitted from this test. The QC check sample concentrate must be obtained from the U.S. Environmental Protection Agency, Environmental Monitoring and Support Laboratory in Cincinnati, Ohio, if available. If not available from that source, the QC check sample concentrate must be obtained from another external source. If not available from either source above, the QC check sample concentrate must be prepared by the laboratory using stock standards prepared independently from those used for calibration.

8.2.2 Using a pipet, prepare QC check samples at a concentration of 100 μg/L by adding 1.00 mL of QC check sample concentrate to each of four 1–L aliquots of reagent water.

8.2.3 Analyze the well-mixed QC check samples according to the method beginning in Section 10 or 11.

8.2.4 Calculate the average recovery (X) in μg/L, and the standard deviation of the recovery (s) in μg/L, for each parameter using the four results.

8.2.5 For each parameter compare s and X with the corresponding acceptance criteria for precision and accuracy, respectively, found in Table 6. If s and X for all parameters of interest meet the acceptance criteria, the system performance is acceptable and analysis of actual samples can begin. If any individual s exceeds the precision limit or any individual X falls outside the range for accuracy, the system performance is unacceptable for that parameter.

NOTE: The large number of parameters in Table 6 present a substantial probability that one or more will fail at least one of the acceptance criteria when all parameters are analyzed.

8.2.6 When one or more of the parameters tested fail at least one of the acceptance criteria, the analyst must proceed according to Section 8.2.6.1 or 8.2.6.2.

8.2.6.1 Locate and correct the source of the problem and repeat the test for all parameters of interest beginning with Section 8.2.2.

8.2.6.2 Beginning with Section 8.2.2, repeat the test only for those parameters that failed to meet criteria. Repeated failure, however, will confirm a general problem with the measurement system. If this occurs, locate and correct the source of the problem and repeat the test for all compounds of interest beginning with Section 8.2.2.

8.3 The laboratory must, on an ongoing basis, spike at least 5% of the samples from each sample site being monitored to assess accuracy. For laboratories analyzing 1 to 20 samples per month, at least one spiked sample per month is required.

8.3.1. The concentration of the spike in the sample should be determined as follows:

8.3.1 If, as in compliance monitoring, the concentration of a specific parameter in the sample is being checked against a regulatory concentration limit, the spike should be at that limit or 1 to 5 times higher than the background concentration determined in Section 8.3.2, whichever concentration would be larger.

8.3.1.2 If the concentration of a specific parameter in the sample is not being checked against a limit specific to that parameter, the spike should be at 100 μg/L or 1 to 5 times higher than the background concentration determined in Section 8.3.2, whichever concentration would be larger.

8.3.1.3 If it is impractical to determine background levels before spiking (e.g., maximum holding times will be exceeded), the spike concentration should be (1) the regulatory concentration limit, if any; or, if none (2) the larger of either 5 times higher than the expected background concentration or 100 μg/L.

8.3.2 Analyze one sample aliquot to determine the background concentration (B) of each parameter. If necessary, prepare a new QC check sample concentrate (Section 8.2.1) appropriate for the background concentrations in the sample. Spike a second sample aliquot with 1.0 mL of the QC check sample concentrate and analyze it to determine the concentration after spiking (A) of each parameter. Calculate each percent recovery (P) as $100(A-B)\%/T$, where T is the known true value of the spike.

8.3.3 Compare the percent recovery (P) for each parameter with the corresponding QC acceptance criteria found in Table 6. These acceptance criteria were calculated to include an allowance for error in measurement of both the background and spike concentrations, assuming a spike to background ratio of 5:1. This error will be accounted for to the extent that the analyst's spike to background ratio approaches 5:1.[7] If spiking was performed at a concentration lower than 100 μg/L, the analyst must use either the QC acceptance criteria in Table 6, or optional QC acceptance criteria calculated for the specific spike concentration. To calculate optional acceptance criteria for the recovery of a parameter: (1) Calculate accuracy (X') using the equation in Table 7, substituting the spike concentration (T) for C; (2) calculate overall precision (S') using the equation in Table 7, substituting X' for $\bar{X}$; (3) calculate the range for recovery at the spike concentration as $(100\ X'/T) \pm 2.44(100\ S'/T)\%$[7]

8.3.4 If any individual P falls outside the designated range for recovery, that parameter has failed the acceptance criteria. A check standard containing each parameter that failed the criteria must be analyzed as described in Section 8.4.

8.4 If any parameter fails the acceptance criteria for recovery in Section 8.3, a QC check standard containing each parameter that failed must be prepared and analyzed.

NOTE: The frequency for the required analysis of a QC check standard will depend upon the number of parameters being simultaneously tested, the complexity of the sample matrix, and the performance of the laboratory. If the entire list of single-component parameters in Table 6 must be measured in the sample in Section 8.3, the probability that the analysis of a QC check standard will be required is high. In this case the QC check standard should be routinely analyzed with the spike sample.

8.4.1 Prepare the QC check standard by adding 1.0 mL of QC check sample concentrate (Section 8.2.1 or 8.3.2) to 1 L of reagent water. The QC check standard needs only to contain the parameters that failed criteria in the test in Section 8.3.

8.4.2 Analyze the QC check standard to determine the concentration measured (A) of each parameter. Calculate each percent recovery (P_S) as 100 (A/T)%, where T is the true value of the standard concentration.

8.4.3 Compare the percent recovery (P_s) for each parameter with the corresponding QC acceptance criteria found in Table 6. Only parameters that failed the test in Section 8.3 need to be compared with these criteria. If the recovery of any such parameter falls outside the designated range, the laboratory performance for that parameter is judged to be out of control, and the problem must be immediately identified and corrected. The analytical result for that parameter in the unspiked sample is suspect and may not be reported for regulatory compliance purposes.

8.5 As part of the QC program for the laboratory, method accuracy for wastewater samples must be assessed and records must be maintained. After the analysis of five spiked wastewater samples as in Section 8.3, calculate the average percent recovery ($\bar{P}$) and the standard deviation of the percent recovery (s_p). Express the accuracy assessment as a percent interval from $\bar{P}-2s_p$ to $\bar{P}+2s_p$. If $\bar{P}=90\%$ and $s_p=10\%$, for example, the accuracy interval is expressed as 70−110%. Update the accuracy assessment for each parameter on a regular basis (e.g. after each five to ten new accuracy measurements).

8.6 As a quality control check, the laboratory must spike all samples with the surrogate standard spiking solution as described in Section 10.2, and calculate the percent recovery of each surrogate compound.

8.7 It is recommended that the laboratory adopt additional quality assurance practices for use with this method. The specific practices that are most productive depend upon the needs of the laboratory and the nature of the samples. Field duplicates may be analyzed to assess the precision of the environmental measurements. Whenever possible, the laboratory should analyze standard reference materials and participate in relevant performance evaluation studies.

9. Sample Collection, Preservation, and Handling

9.1 Grab samples must be collected in glass containers. Conventional sampling practices[8] should be followed, except that the bottle must not be prerinsed with sample before collection. Composite samples should be collected in refrigerated glass containers in accordance with the requirements of the program. Automatic sampling equipment must be as free as possible of Tygon tubing and other potential sources of contamination.

9.2 All sampling must be iced or refrigerated at 4 °C from the time of collection until extraction. Fill the sample bottles and, if residual chlorine is present, add 80 mg of sodium thiosulfate per liter of sample and mix well. EPA Methods 330.4 and 330.5 may be used for measurement of residual chlorine.[9] Field test kits are available for this purpose.

9.3 All samples must be extracted within 7 days of collection and completely analyzed within 40 days of extraction.

10. Separatory Funnel Extraction

10.1 Samples are usually extracted using separatory funnel techniques. If emulsions will prevent achieving acceptable solvent recovery with separatory funnel extractions, continuous extraction (Section 11) may be used. The separatory funnel extraction scheme described below assumes a sample volume of 1 L. When sample volumes of 2 L are to be extracted, use 250, 100, and 100-mL volumes of methylene chloride for the serial extraction of the base/neutrals and 200, 100, and 100-mL volumes of methylene chloride for the acids.

10.2 Mark the water meniscus on the side of the sample bottle for later determination of sample volume. Pour the entire sample into a 2–L separatory funnel. Pipet 1.00 mL of the surrogate standard spiking solution into the separatory funnel and mix well. Check the pH of the sample with wide-range pH paper and adjust to pH>11 with sodium hydroxide solution.

10.3 Add 60 mL of methylene chloride to the sample bottle, seal, and shake for 30 s to rinse the inner surface. Transfer the solvent to the separatory funnel and extract the sample by shaking the funnel for 2 min. with periodic venting to release excess pressure. Allow the organic layer to separate from the water phase for a minimum of 10 min. If the emulsion interface between layers is more than one-third the volume of the solvent layer, the analyst must employ mechanical techniques to complete the phase separation. The optimum technique depends upon the sample, but may include stirring, filtration of the emulsion through glass wool, centrifugation, or other physical methods. Collect the methylene chloride extract in a 250-mL Erlenmeyer flask. If the emulsion cannot be broken (recovery of less than 80% of the methylene chloride, corrected for the water solubility of methylene chloride), transfer the sample, solvent, and emulsion into the extraction chamber of a continuous extractor and proceed as described in Section 11.3.

10.4 Add a second 60-mL volume of methylene chloride to the sample bottle and repeat the extraction procedure a second time, combining the extracts in the Erlenmeyer flask. Perform a third extraction in the same manner. Label the combined extract as the base/neutral fraction.

10.5 Adjust the pH of the aqueous phase to less than 2 using sulfuric acid. Serially extract the acidified aqueous phase three times with 60-mL aliquots of methylene chloride. Collect and combine the extracts in a 250-mL Erlenmeyer flask and label the combined extracts as the acid fraction.

10.6 For each fraction, assemble a Kuderna-Danish (K-D) concentrator by attaching a 10-mL concentrator tube to a 500-mL evaporative flask. Other concentration devices or techniques may be used in place of the K-D concentrator if the requirements of Section 8.2 are met.

10.7 For each fraction, pour the combined extract through a solvent-rinsed drying column containing about 10 cm of anhydrous sodium sulfate, and collect the extract in the K-D concentrator. Rinse the Erlenmeyer flask and column with 20 to 30 mL of methylene chloride to complete the quantitative transfer.

10.8 Add one or two clean boiling chips and attach a three-ball Snyder column to the evaporative flask for each fraction. Prewet each Snyder column by adding about 1 mL of methylene chloride to the top. Place the K-D apparatus on a hot water bath (60 to 65 °C) so that the concentrator tube is partially immersed in the hot water, and the entire lower rounded surface of the flask is bathed with hot vapor. Adjust the vertical position of the apparatus and the water temperature as required to complete the concentration in 15 to 20 min. At the proper rate of distillation the balls of the column will actively chatter but the chambers will not flood with condensed solvent. When the apparent volume of liquid reaches 1 mL, remove the K-D apparatus from the water bath and allow it to drain and cool for at least 10 min. Remove the Snyder column and rinse the flask and its lower joint into the concentrator tube with 1 to 2 mL of methylene chloride. A 5-mL syringe is recommended for this operation.

10.9 Add another one or two clean boiling chips to the concentrator tube for each fraction and attach a two-ball micro-Snyder column. Prewet the Snyder column by adding about 0.5 mL of methylene chloride to the top. Place the K-D apparatus on a hot water bath (60 to 65 °C) so that the concentrator tube is partially immersed in hot water. Adjust the vertical position of the apparatus and the water temperature as required to complete the concentration in 5 to 10 min. At the proper rate of distillation the balls of the column will actively chatter but the chambers will not flood with condensed solvent. When the apparent volume of liquid reaches about 0.5 mL, remove the K-D apparatus from the water bath and allow it to drain and cool for at least 10 min. Remove the Snyder column and rinse the flask and its lower joint into the concentrator tube with approximately 0.2 mL of acetone or methylene chloride. Adjust the final volume to 1.0 mL with the solvent. Stopper the concentrator tube and store refrigerated if further processing will not be performed immediately. If the extracts will be stored longer than two days, they should be transferred to Teflon-sealed screw-cap vials and labeled base/neutral or acid fraction as appropriate.

10.10 Determine the original sample volume by refilling the sample bottle to the mark and transferring the liquid to a 1000-mL graduated cylinder. Record the sample volume to the nearest 5 mL.

11. Continuous Extraction

11.1 When experience with a sample from a given source indicates that a serious emulsion problem will result or an emulsion is encountered using a separatory funnel in Section 10.3, a continuous extractor should be used.

11.2 Mark the water meniscus on the side of the sample bottle for later determination of sample volume. Check the pH of the sample with wide-range pH paper and adjust to pH >11 with sodium hydroxide solution. Transfer the sample to the continuous extractor and using a pipet, add 1.00 mL of surrogate standard spiking solution and mix well. Add 60 mL of methylene chloride to the sample bottle, seal, and shake for 30 s to rinse the inner surface. Transfer the solvent to the extractor.

11.3 Repeat the sample bottle rinse with an additional 50 to 100-mL portion of methylene chloride and add the rinse to the extractor.

11.4 Add 200 to 500 mL of methylene chloride to the distilling flask, add sufficient reagent water to ensure proper operation, and extract for 24 h. Allow to cool, then detach the distilling flask. Dry, concentrate, and seal the extract as in Sections 10.6 through 10.9.

11.5 Charge a clean distilling flask with 500 mL of methylene chloride and attach it to the continuous extractor. Carefully, while stirring, adjust the pH of the aqueous phase to less than 2 using sulfuric acid. Extract for 24 h. Dry, concentrate, and seal the extract as in Sections 10.6 through 10.9.

12. Daily GC/MS Performance Tests

12.1 At the beginning of each day that analyses are to be performed, the GC/MS system must be checked to see if acceptable performance criteria are achieved for DFTPP.[10] Each day that benzidine is to be determined, the tailing factor criterion described in Section 12.4 must be achieved. Each day that the acids are to be determined, the tailing factor criterion in Section 12.5 must be achieved.

12.2 These performance tests require the following instrumental parameters:

Electron Energy: 70 V (nominal)
Mass Range: 35 to 450 amu
Scan Time: To give at least 5 scans per peak but not to exceed 7 s per scan.

12.3 DFTPP performance test—At the beginning of each day, inject 2 μL (50 ng) of DFTPP standard solution. Obtain a background-corrected mass spectra of DFTPP and confirm that all the key m/z criteria in Table 9 are achieved. If all the criteria are not achieved, the analyst must retune the mass spectrometer and repeat the test until all criteria are achieved. The performance criteria must be achieved before any samples, blanks, or standards are analyzed. The taililg factor tests in Sections 12.4 and 12.5 may be performed simultaneously with the DFTPP test.

12.4 Column performance test for base/neutrals—At the beginning of each day that the base/neutral fraction is to be analyzed for benzidine, the benzidine tailing factor must be calculated. Inject 100 ng of benzidine either separately or as a part of a standard mixture that may contain DFTPP and calculate the tailing factor. The benzidine tailing factor must be less than 3.0. Calculation of the tailing factor is illustrated in Figure 13.[11] Replace the column packing if the tailing factor criterion cannot be achieved.

12.5 Column performance test for acids—At the beginning of each day that the acids are to be determined, inject 50 ng of pentachlorophenol either separately or as a part of a standard mix that may contain DFTPP. The tailing factor for pentachlorophenol must be less than 5. Calculation of the tailing factor is illustrated in Figure 13.[11] Replace the column packing if the tailing factor criterion cannot be achieved.

13. Gas Chromatography/Mass Spectrometry

13.1 Table 4 summarizes the recommended gas chromatographic operating conditions for the base/neutral fraction. Table 5 summarizes the recommended gas chromatographic operating conditions for the acid fraction. Included in these tables are retention times and MDL that can be achieved under these conditions. Examples of the separations achieved by these columns are shown in Figures 1 through 12. Other packed or capillary (open-tubular) columns or chromatographic conditions may be used if the requirements of Section 8.2 are met.

13.2 After conducting the GC/MS performance tests in Section 12, calibrate the system daily as described in Section 7.

13.3 The internal standard must be added to sample extract and mixed thoroughly immediately before it is injected into the instrument. This procedure minimizes losses due to adsorption, chemical reaction or evaporation.

13.4 Inject 2 to 5 µL of the sample extract or standard into the GC/MS system using the solvent-flush technique.[12] Smaller (1.0 µL) volumes may be injected if automatic devices are employed. Record the volume injected to the nearest 0.05 µL.

13.5 If the response for any m/z exceeds the working range of the GC/MS system, dilute the extract and reanalyze.

13.6 Perform all qualitative and quantitative measurements as described in Sections 14 and 15. When the extracts are not being used for analyses, store them refrigerated at 4°C, protected from light in screw-cap vials equipped with unpierced Teflon-lined septa.

14. Qualitative Identification

14.1 Obtain EICPs for the primary m/z and the two other masses listed in Tables 4 and 5. See Section 7.3 for masses to be used with internal and surrogate standards. The following criteria must be met to make a qualitative identification:

14.1.1 The characteristic masses of each parameter of interest must maximize in the same or within one scan of each other.

14.1.2 The retention time must fall within ±30 s of the retention time of the authentic compound.

14.1.3 The relative peak heights of the three characteristic masses in the EICPs must fall within ±20% of the relative intensities of these masses in a reference mass spectrum. The reference mass spectrum can be obtained from a standard analyzed in the GC/MS system or from a reference library.

14.2 Structural isomers that have very similar mass spectra and less than 30 s difference in retention time, can be explicitly identified only if the resolution between authentic isomers in a standard mix is acceptable. Acceptable resolution is achieved if the baseline to valley height between the isomers is less than 25% of the sum of the two peak heights. Otherwise, structural isomers are identified as isomeric pairs.

15. Calculations

15.1 When a parameter has been identified, the quantitation of that parameter will be based on the integrated abundance from the EICP of the primary characteristic m/z in Tables 4 and 5. Use the base peak m/z for internal and surrogate standards. If the sample produces an interference for the primary m/z, use a secondary characteristic m/z to quantitate.

Calculate the concentration in the sample using the response factor (RF) determined in Section 7.2.2 and Equation 3.

$$\text{Concentration } (\mu g/L) = \frac{(A_s)(I_s)}{(A_{is})(RF)(V_o)}$$

Equation 3

where:

A_s=Area of the characteristic m/z for the parameter or surrogate standard to be measured.

A_{is}=Area of the characteristic m/z for the internal standard.

I_s=Amount of internal standard added to each extract (µg).

V_o=Volume of water extracted (L).

15.2 Report results in µg/L without correction for recovery data. All QC data obtained should be reported with the sample results.

16. Method Performance

16.1 The method detection limit (MDL) is defined as the minimum concentration of a substance that can be measured and reported with 99% confidence that the value is above zero.[1] The MDL concentrations listed in Tables 4 and 5 were obtained using reagent water.[13] The MDL actually achieved in a given analysis will vary depending on instrument sensitivity and matrix effects.

16.2 This method was tested by 15 laboratories using reagent water, drinking water, surface water, and industrial wastewaters spiked at six concentrations over the range 5 to 1300 µg/L.[14] Single operator precision, overall precision, and method accuracy were found to be directly related to the concentration of the parameter and essentially independent of the sample matrix. Linear equations to describe these relationships are presented in Table 7.

17. Screening Procedure for 2,3,7,8-Tetrachlorodibenzo-p-dioxin (2,3,7,8–TCDD)

17.1 If the sample must be screened for the presence of 2,3,7,8–TCDD, it is recommended that the reference material not be handled in the laboratory unless extensive safety precautions are employed. It is sufficient to analyze the base/neutral extract by selected ion monitoring (SIM) GC/MS techniques, as follows:

17.1.1 Concentrate the base/neutral extract to a final volume of 0.2 ml.

17.1.2 Adjust the temperature of the base/neutral column (Section 5.6.2) to 220 °C.

17.1.3 Operate the mass spectrometer to acquire data in the SIM mode using the ions at m/z 257, 320 and 322 and a dwell time no greater than 333 milliseconds per mass.

17.1.4 Inject 5 to 7 µL of the base/neutral extract. Collect SIM data for a total of 10 min.

17.1.5 The possible presence of 2,3,7,8–TCDD is indicated if all three masses exhibit simultaneous peaks at any point in the selected ion current profiles.

17.1.6 For each occurrence where the possible presence of 2,3,7,8–TCDD is indicated, calculate and retain the relative abundances of each of the three masses.

17.2 False positives to this test may be caused by the presence of single or coeluting combinations of compounds whose mass spectra contain all of these masses.

17.3 Conclusive results of the presence and concentration level of 2,3,7,8–TCDD can be obtained only from a properly equipped laboratory through the use of EPA Method 613 or other approved alternate test procedures.

REFERENCES

1. 40 CFR part 136, appendix B.

2. ''Sampling and Analysis Procedures for Screening of Industrial Effluents for Priority Pollutants,'' U.S. Environmental Protection Agency, Environmental Monitoring and Support Laboratory, Cincinnati, Ohio 45268, March 1977, Revised April 1977. Available from Effluent Guidelines Division, Washington, DC 20460.

3. ASTM Annual Book of Standards, Part 31, D3694–78. ''Standard Practices for Preparation of Sample Containers and for Preservation of Organic Constituents,'' American Society for Testing and Materials, Philadelphia.

4. ''Carcinogens—Working With Carcinogens,'' Department of Health, Education, and Welfare, Public Health Service, Center for Disease Control, National Institute for Occupational Safety and Health, Publication No. 77–206, August 1977.

5. ''OSHA Safety and Health Standards, General Industry,'' (29 CFR part 1910), Occupational Safety and Health Administration, OSHA 2206 (Revised, January 1976).

6. ''Safety in Academic Chemistry Laboratories,''American Chemical Society Publication, Committee on Chemical Safety, 3rd Edition, 1979.

7. Provost, L.P., and Elder, R.S. ''Interpretation of Percent Recovery Data,'' *American Laboratory*, 15, 58–63 (1983). (The value 2.44 used in the equation in Section 8.3.3 is two times the value 1.22 derived in this report.)

8. ASTM Annual Book of Standards, Part 31, D3370–76. ''Standard Practices for Sampling Water,'' American Society for Testing and Materials, Philadelphia.

9. ''Methods 330.4 (Titrimetric, DPD-FAS) and 330.5 (Spectrophotometric, DPD) for Chlorine, Total Residual,'' Methods for Chemical Analysis of Water and Wastes, EPA–600/4–79–020, U.S. Environmental Protection Agency, Environmental Monitoring and Support Laboratory, Cincinnati, Ohio 45268, March 1979.

10. Eichelberger, J.W., Harris, L.E., and Budde, W.L. ''Reference Compound to Calibrate Ion Abundance Measurement in Gas Chromatography-Mass Spectometry,'' *Analytical Chemistry*, 47, 995 (1975).

11. McNair, N.M. and Bonelli, E.J. ''Basic Chromatography,'' Consolidated Printing, Berkeley, California, p. 52, 1969.

12. Burke, J.A. ''Gas Chromatography for Pesticide Residue Analysis; Some Practical Aspects,'' *Journal of the Association of Official Analytical Chemists*, *48*, 1037 (1965).

13. Olynyk, P., Budde, W.L., and Eichelberger, J.W. ''Method Detection Limit for Methods 624 and 625,'' Unpublished report, May 14, 1980.

14. ''EPA Method Study 30, Method 625, Base/Neutrals, Acids, and Pesticides,'' EPA 600/4–84–053, National Technical Information Service, PB84–206572, Springfield, Virginia 22161, June 1984.

TABLE 1—BASE/NEUTRAL EXTRACTABLES

Parameter	STORET No.	CAS No.
Acenaphthene	34205	83–32–9
Acenaphthylene	34200	208–96–8
Anthracene	34220	120–12–7
Aldrin	39330	309–00–2
Benzo(a)anthracene	34526	56–55–3
Benzo(b)fluoranthene	34230	205–99–2
Benzo(k)fluoranthene	34242	207–08–9
Benzo(a)pyrene	34247	50–32–8
Benzo(ghi)perylene	34521	191–24–2
Benzyl butyl phthalate	34292	85–68–7
β-BHC	39338	319–85–7
δ-BHC	34259	319–86–8
Bis(2-chloroethyl) ether	34273	111–44–4
Bis(2-chloroethoxy)methane	34278	111–91–1
Bis(2-ethylhexyl) phthalate	39100	117–81–7
Bis(2-chloroisopropyl) ether[a]	34283	108–60–1
4-Bromophenyl phenyl ether[a]	34636	101–55–3
Chlordane	39350	57–74–9
2-Chloronaphthalele	34581	91–58–7
4-Chlorophenyl phenyl ether	34641	7005–72–3
Chrysene	34320	218–01–9
4,4′-DDD	39310	72–54–8
4,4′-DDE	39320	72–55–9
4,4′-DDT	39300	50–29–3
Dibenzo(a,h)anthracene	34556	53–70–3
Di-n-butylphthalate	39110	84–74–2
1,3-Dichlorobenzene	34566	541–73–1
1,2-Dichlorobenzene	34536	95–50–1
1,4-Dichlorobenzene	34571	106–46–7
3,3′-Dichlorobenzidine	34631	91–94–1
Dieldrin	39380	60–57–1
Diethyl phthalate	34336	84–66–2
Dimethyl phthalate	34341	131–11–3
2,4-Dinitrotoluene	34611	121–14–2
2,6-Dinitrotoluene	34626	606–20–2
Di-n-octylphthalate	34596	117–84–0
Endosulfan sulfate	34351	1031–07–8

TABLE 1—BASE/NEUTRAL EXTRACTABLES—Continued

Parameter	STORET No.	CAS No.
Endrin aldehyde	34366	7421–93–4
Fluoranthene	34376	206–44–0
Fluorene	34381	86–73–7
Heptachlor	39410	76–44–8
Heptchlor epoxide	39420	1024–57–3
Hexachlorobenzene	39700	118–74–1
Hexachlorobutadiene	34391	87–68–3
Hexachloroethane	34396	67–72–1
Indeno(1,2,3-cd)pyrene	34403	193–39–5
Isophorone	34408	78–59–1
Naphthalene	34696	91–20–3
Nitrobenzene	34447	98–95–3
N-Nitrosodi-n-propylamine	34428	621–64–7
PCB-1016	34671	12674–11–2
PCB-1221	39488	11104–28–2
PCB-1232	39492	11141–16–5
PCB-1242	39496	53469–21–9
PCB-1248	39500	12672–29–6
PCB-1254	39504	11097–69–1
PCB-1260	39508	11096–82–5
Phenanthrene	34461	85–01–8
Pyrene	34469	129–00–0
Toxaphene	39400	8001–35–2
1,2,4-Trichlorobenzene	34551	120–82–1

[a] The proper chemical name is 2,2′-oxybis(1-chloropropane).

TABLE 2—ACID EXTRACTABLES

Parameter	STORET No.	CAS No.
4-Chloro-3-methylphenol	34452	59–50–7
2-Chlorophenol	34586	95–57–8
2,4-Dichlorophenol	34601	120–83–2
2,4-Dimethylphenol	34606	105–67–9
2,4-Dinitrophenol	34616	51–28–5
2-Methyl-4,6-dinitrophenol	34657	534–52–1
2-Nitrophenol	34591	88–75–5
4-Nitrophenol	34646	100–02–7
Pentachlorophenol	39032	87–86–5
Phenol	34694	108–95–2
2,4,6-Trichlorophenol	34621	88–06–2

TABLE 3—ADDITIONAL EXTRACTABLE PARAMETERS [a]

Parameter	STORET No.	CAS No.	Method
Benzidine	39120	92–87–5	605
β-BHC	39337	319–84–6	608
δ-BHC	39340	58–89–8	608
Endosulfan I	34361	959–98–8	608
Endosulfan II	34356	33213–65–9	608
Endrin	39390	72–20–8	608
Hexachlorocylopentadiene	34386	77–47–4	612
N-Nitrosodimethylamine	34438	62–75–9	607
N-Nitrosodiphenylamine	34433	86–30–6	607

[a] See Section 1.2.

TABLE 4—CHROMATOGRAPHIC CONDITIONS, METHOD DETECTION LIMITS, AND CHARACTERISTIC MASSES FOR BASE/NEUTRAL EXTRACTABLES

Parameter	Retention time (min)	Method detection limit (µg/L)	Characteristic masses					
			Electron impact			Chemical ionization		
			Primary	Secondary	Secondary	Methane	Methane	Methane
1,3-Dichlorobenzene	7.4	1.9	146	148	113	146	148	150
1,4-Dichlorobenzene	7.8	4.4	146	148	113	146	148	150
Hexachloroethane	8.4	1.6	117	201	199	199	201	203
Bis(2-chloroethyl) ether [a]	8.4	5.7	93	63	95	63	107	109
1,2-Dichlorobenzene	8.4	1.9	146	148	113	146	148	150
Bis(2-chloroisopropyl) ether [a]	9.3	5.7	45	77	79	77	135	137
N-Nitrosodi-n-propylamine	....	....	130	42	101	....	....	....
Nitrobenzene	11.1	1.9	77	123	65	124	152	164
Hexachlorobutadiene	11.4	0.9	225	223	227	223	225	227
1,2,4-Trichlorobenzene	11.6	1.9	180	182	145	181	183	209
Isophorone	11.9	2.2	82	95	138	139	167	178
Naphthalene	12.1	1.6	128	129	127	129	157	169
Bis(2-chloroethoxy) methane	12.2	5.3	93	95	123	65	107	137
Hexachlorocyclopentadiene [a]	13.9	....	237	235	272	235	237	239
2-Chloronaphthalene	15.9	1.9	162	164	127	163	191	203
Acenaphthylene	17.4	3.5	152	151	153	152	153	181
Acenaphthene	17.8	1.9	154	153	152	154	155	183
Dimethyl phthalate	18.3	1.6	163	194	164	151	163	164
2,6-Dinitrotoluene	18.7	1.9	165	89	121	183	211	223
Fluorene	19.5	1.9	166	165	167	166	167	195
4-Chlorophenyl phenyl ether	19.5	4.2	204	206	141	....	....	....
2,4-Dinitrotoluene	19.8	5.7	165	63	182	183	211	223
Diethyl phthalate	20.1	1.9	149	177	150	177	223	251
N-Nitrosodiphenylamine [b]	20.5	1.9	169	168	167	169	170	198
Hexachlorobenzene	21.0	1.9	284	142	249	284	286	288
β-BHC [b]	21.1	....	183	181	109	....	....	....
4-Bromophenyl phenyl ether	21.2	1.9	248	250	141	249	251	277
δ-BHC [b]	22.4	....	183	181	109	....	....	....
Phenanthrene	22.8	5.4	178	179	176	178	179	207
Anthracene	22.8	1.9	178	179	176	178	179	207
β-BHC	23.4	4.2	181	183	109	....	....	....

TABLE 4—CHROMATOGRAPHIC CONDITIONS, METHOD DETECTION LIMITS, AND CHARACTERISTIC MASSES FOR BASE/NEUTRAL EXTRACTABLES—Continued

Parameter	Retention time (min)	Method detection limit (µg/L)	Characteristic masses					
			Electron impact			Chemical ionization		
			Primary	Secondary	Secondary	Methane	Methane	Methane
Heptachlor	23.4	1.9	100	272	274	....	....	....
δ-BHC	23.7	3.1	183	109	181	....	....	....
Aldrin	24.0	1.9	66	263	220	....	....	....
Dibutyl phthalate	24.7	2.5	149	150	104	149	205	279
Heptachlor epoxide	25.6	2.2	353	355	351	....	....	....
Endosulfan I[b]	26.4	....	237	339	341	....	....	....
Fluoranthene	26.5	2.2	202	101	100	203	231	243
Dieldrin	27.2	2.5	79	263	279	....	....	....
4,4′-DDE	27.2	5.6	246	248	176	....	....	....
Pyrene	27.3	1.9	202	101	100	203	231	243
Endrin[b]	27.9	....	81	263	82	....	....	....
Endosulfan II[b]	28.6	....	237	339	341	....	....	....
4,4′-DDD	28.6	2.8	235	237	165	....	....	....
Benzidine[b]	28.8	44	184	92	185	185	213	225
4,4′-DDT	29.3	4.7	235	237	165	....	....	....
Endosulfan sulfate	29.8	5.6	272	387	422	....	....	....
Endrin aldehyde	....	....	67	345	250	....	....	....
Butyl benzyl phthalate	29.9	2.5	149	91	206	149	299	327
Bis(2-ethylhexyl) phthalate	30.6	2.5	149	167	279	149	....	....
Chrysene	31.5	2.5	228	226	229	228	229	257
Benzo(a)anthracene	31.5	7.8	228	229	226	228	229	257
3,3′-Dichlorobenzidine	32.2	16.5	252	254	126	....	....	
Di-n-octyl phthalate	32.5	2.5	149					
Benzo(b)fluoranthene	34.9	4.8	252	253	125	252	253	281
Benzo(k)fluoranthene	34.9	2.5	252	253	125	252	253	281
Benzo(a)pyrene	36.4	2.5	252	253	125	252	253	281
Indeno(1,2,3-cd) pyrene	42.7	3.7	276	138	277	276	277	305
Dibenzo(a,h)anthracene	43.2	2.5	278	139	279	278	279	307
Benzo(ghi)perylene	45.1	4.1	276	138	277	276	277	305
N-Nitrosodimethylamine[b]	....	....	42	74	44	....	....	....
Chlordane[c]	19–30	....	373	375	377	....	....	....
Toxaphene[c]	25–34	....	159	231	233	....	....	....
PCB 1016[c]	18–30	....	224	260	294	....	....	....
PCB 1221[c]	15–30	30	190	224	260	....	....	....
PCB 1232[c]	15–32	....	190	224	260	....	....	....
PCB 1242[c]	15–32	....	224	260	294	....	....	....
PCB 1248[c]	12–34	....	294	330	262	....	....	....
PCB 1254[c]	22–34	36	294	330	362	....	....	....
PCB 1260[c]	23–32	....	330	362	394	....	....	....

[a] The proper chemical name is 2,2′-bisoxy(1-chloropropane).

[b] See Section 1.2.

[c] These compounds are mixtures of various isomers (See Figures 2 through 12). Column conditions: Supelcoport (100/120 mesh) coated with 3% SP–2250 packed in a 1.8 m long × 2 mm ID glass column with helium carrier gas at 30 mL/min. flow rate. Column temperature held isothermal at 50 °C for 4 min., then programmed at 8 °C/min. to 270 °C and held for 30 min.

TABLE 5—CHROMATOGRAPHIC CONDITIONS, METHOD DETECTION LIMITS, AND CHARACTERISTIC MASSES FOR ACID EXTRACTABLES

Parameter	Retention time (min)	Method detection limit (µg/L)	Characteristic masses					
			Electron Impact			Chemical ionization		
			Primary	Secondary	Secondary	Methane	Methane	Methane
2-Chlorophenol	5.9	3.3	128	64	130	129	131	157
2-Nitrophenol	6.5	3.6	139	65	109	140	168	122
Phenol	8.0	1.5	94	65	66	95	123	135
2,4-Dimethylphenol	9.4	2.7	122	107	121	123	151	163
2,4-Dichlorophenol	9.8	2.7	162	164	98	163	165	167
2,4,6-Trichlorophenol	11.8	2.7	196	198	200	197	199	201
4-Chloro-3-methylphenol	13.2	3.0	142	107	144	143	171	183
2,4-Dinitrophenol	15.9	42	184	63	154	185	213	225
2-Methyl-4,6-dinitrophenol	16.2	24	198	182	77	199	227	239
Pentachlorophenol	17.5	3.6	266	264	268	267	265	269

TABLE 5—CHROMATOGRAPHIC CONDITIONS, METHOD DETECTION LIMITS, AND CHARACTERISTIC MASSES FOR ACID EXTRACTABLES—Continued

Parameter	Retention time (min)	Method detection limit (µg/L)	Characteristic masses					
			Electron Impact			Chemical ionization		
			Primary	Secondary	Secondary	Methane	Methane	Methane
4-Nitrophenol	20.3	2.4	65	139	109	140	168	122

Column conditions: Supelcoport (100/120 mesh) coated with 1% SP–1240DA packed in a 1.8 m long × 2mm ID glass column with helium carrier gas at 30 mL/min. flow rate. Column temperature held isothermal at 70 °C for 2 min. then programmed at 8 °C/min. to 200 °C.

TABLE 6—QC ACCEPTANCE CRITERIA—METHOD 625

Parameter	Test conclusion (µg/L)	Limits for s (µg/L)	Range for X(µg/L)	Range for P, P_s (Percent)
Acenaphthene	100	27.6	60.1–132.3	47–145
Acenaphthylene	100	40.2	53.5–126.0	33–145
Aldrin	100	39.0	7.2–152.2	D–166
Anthracene	100	32.0	43.4–118.0	27–133
Benzo(a)anthracene	100	27.6	41.8–133.0	33–143
Benzo(b)fluoranthene	100	38.8	42.0–140.4	24–159
Benzo(k)fluoranthene	100	32.3	25.2–145.7	11–162
Benzo(a)pyrene	100	39.0	31.7–148.0	17–163
Benzo(ghi)perylene	100	58.9	D–195.0	D–219
Benzyl butyl phthalate	100	23.4	D–139.9	D–152
β-BHC	100	31.5	41.5–130.6	24–149
δ-BHC	100	21.6	D–100.0	D–110
Bis(2-chloroethyl) ether	100	55.0	42.9–126.0	12–158
Bis(2-chloroethoxy)methane	100	34.5	49.2–164.7	33–184
Bis(2-chloroisopropyl) ether[a]	100	46.3	62.8–138.6	36–166
Bis(2-ethylhexyl) phthalate	100	41.1	28.9–136.8	8–158
4-Bromophenyl phenyl ether	100	23.0	64.9–114.4	53–127
2-Chloronaphthalene	100	13.0	64.5–113.5	60–118
4-Chlorophenyl phenyl ether	100	33.4	38.4–144.7	25–158
Chrysene	100	48.3	44.1–139.9	17–168
4,4′-DDD	100	31.0	D–134.5	D–145
4,4′-DDE	100	32.0	19.2–119.7	4–136
4,4′-DDT	100	61.6	D–170.6	D–203
Dibenzo(a,h)anthracene	100	70.0	D–199.7	D–227
Di-n-butyl phthalate	100	16.7	8.4–111.0	1–118
1,2-Dichlorobenzene	100	30.9	48.6–112.0	32–129
1,3-Dichlorobenzene	100	41.7	16.7–153.9	D–172
1,4,-Dichlorobenzene	100	32.1	37.3–105.7	20–124
3,3′-Dhlorobenzidine	100	71.4	8.2–212.5	D–262
Dieldrin	100	30.7	44.3–119.3	29–136
Diethyl phthalate	100	26.5	D–100.0	D–114
Dimethyl phthalate	100	23.2	D–100.0	D–112
2,4-Dinitrotoluene	100	21.8	47.5–126.9	39–139
2,6-Dinitrotoluene	100	29.6	68.1–136.7	50–158
Di-n-octyl phthalate	100	31.4	18.6–131.8	4–146
Endosulfan sulfate	100	16.7	D–103.5	D–107
Endrin aldehyde	100	32.5	D–188.8	D–209
Fluoranthene	100	32.8	42.9–121.3	26–137
Fluorene	100	20.7	71.6–108.4	59–121
Heptachlor	100	37.2	D–172.2	D–192
Heptachlor epoxide	100	54.7	70.9–109.4	26–155
Hexachlorobenzene	100	24.9	7.8–141.5	D–152
Hexachlorobutadiene	100	26.3	37.8–102.2	24–116
Hexachloroethane	100	24.5	55.2–100.0	40–113
Indeno(1,2,3-cd)pyrene	100	44.6	D–150.9	D–171
Isophorone	100	63.3	46.6–180.2	21–196
Naphthalene	100	30.1	35.6–119.6	21–133
Nitrobenzene	100	39.3	54.3–157.6	35–180
N-Nitrosodi-n-propylamine	100	55.4	13.6–197.9	D–230
PCB-1260	100	54.2	19.3–121.0	D–164
Phenanthrene	100	20.6	65.2–108.7	54–120
Pyrene	100	25.2	69.6–100.0	52–115
1,2,4-Trichlorobenzene	100	28.1	57.3–129.2	44–142
4-Chloro-3-methylphenol	100	37.2	40.8–127.9	22–147
2-Chlorophenol	100	28.7	36.2–120.4	23–134

TABLE 6—QC ACCEPTANCE CRITERIA—METHOD 625—Continued

Parameter	Test conclusion (µg/L)	Limits for s (µg/L)	Range for X(µg/L)	Range for P, P_s (Percent)
2,4-Dichlorophenol	100	26.4	52.5–121.7	39–135
2,4-Dimethylphenol	100	26.1	41.8–109.0	32–119
2,4-Dinitrophenol	100	49.8	D–172.9	D–191
2-Methyl-4,6-dinitrophenol	100	93.2	53.0–100.0	D–181
2-Nitrophenol	100	35.2	45.0–166.7	29–182
4-Nitrophenol	100	47.2	13.0–106.5	D–132
Pentachlorophenol	100	48.9	38.1–151.8	14–176
Phenol	100	22.6	16.6–100.0	5–112
2,4,6-Trichlorophenol	100	31.7	52.4–129.2	37–144

s=Standard deviation for four recovery measurements, in µg/L (Section 8.2.4).
X=Average recovery for four recovery measurements, in µg/L (Section 8.2.4).
P, P_s=Percent recovery measured (Section 8.3.2, Section 8.4.2).
D=Detected; result must be greater than zero.

NOTE: These criteria are based directly upon the method performance data in Table 7. Where necessary, the limits for recovery have been broadened to assure applicability of the limts to concentrations below those used to develop Table 7.

[a] The proper chemical name is 2,2′oxybis(1-chloropropane).

TABLE 7—METHOD ACCURACY AND PRECISION AS FUNCTIONS OF CONCENTRATION—METHOD 625

Parameter	Accuracy, as recovery, X′ (µg/L)	Single analyst precision, s_r’ (µg/L)	Overall precision, S′ (µg/L)
Acenaphthene	$0.96C=0.19$	$0.15\bar{X}-0.12$	$0.21\bar{X}-0.67$
Acenaphthylene	$0.89C=0.74$	$0.24\bar{X}-1.06$	$0.26\bar{X}-0.54$
Aldrin	$0.78C=1.66$	$0.27\bar{X}-1.28$	$0.43\bar{X}=1.13$
Anthracene	$0.80C=0.68$	$0.21\bar{X}-0.32$	$0.27\bar{X}-0.64$
Benzo(a)anthracene	$0.88C-0.60$	$0.15\bar{X}=0.93$	$0.26\bar{X}-0.28$
Benzo(b)fluoranthene	$0.93C-1.80$	$0.22\bar{X}=0.43$	$0.29\bar{X}=0.96$
Benzo(k)fluoranthene	$0.87C-1.56$	$0.19\bar{X}=1.03$	$0.35\bar{X}=0.40$
Benzo(a)pyrene	$0.90C-0.13$	$0.22\bar{X}=0.48$	$0.32\bar{X}=1.35$
Benzo(ghi)perylene	$0.98C-0.86$	$0.29\bar{X}=2.40$	$0.51\bar{X}-0.44$
Benzyl butyl phthalate	$0.66C-1.68$	$0.18\bar{X}=0.94$	$0.53\bar{X}=0.92$
β-BHC	$0.87C-0.94$	$0.20\bar{X}-0.58$	$0.30\bar{X}-1.94$
δ-BHC	$0.29C-1.09$	$0.34\bar{X}=0.86$	$0.93\bar{X}-0.17$
Bis(2-chloroethyl) ether	$0.86C-1.54$	$0.35\bar{X}-0.99$	$0.35\bar{X}=0.10$
Bis(2-chloroethoxy)methane	$1.12C-5.04$	$0.16\bar{X}=1.34$	$0.26\bar{X}=2.01$
Bis(2-chloroisopropyl) ether[a]	$1.03C-2.31$	$0.24\bar{X}=0.28$	$0.25\bar{X}=1.04$
Bis(2-ethylhexyl) phthalate	$0.84C-1.18$	$0.26\bar{X}=0.73$	$0.36\bar{X}=0.67$
4-Bromophenyl phenyl ether	$0.91C-1.34$	$0.13\bar{X}=0.66$	$0.16\bar{X}=0.66$
2-Chloronaphthalene	$0.89C=0.01$	$0.07\bar{X}=0.52$	$0.13\bar{X}=0.34$
4-Chlorophenyl phenyl ether	$0.91C=0.53$	$0.20\bar{X}-0.94$	$0.30\bar{X}-0.46$
Chrysene	$0.93C-1.00$	$0.28\bar{X}=0.13$	$0.33\bar{X}-0.09$
4,4′-DDD	$0.56C-0.40$	$0.29\bar{X}-0.32$	$0.66\bar{X}-0.96$
4,4′-DDE	$0.70C-0.54$	$0.26\bar{X}-1.17$	$0.39\bar{X}-1.04$
4,4′-DDT	$0.79C-3.28$	$0.42\bar{X}=0.19$	$0.65\bar{X}-0.58$
Dibenzo(a,h)anthracene	$0.88C=4.72$	$0.30\bar{X}=8.51$	$0.59\bar{X}=0.25$
Di-n-butyl phthalate	$0.59C=0.71$	$0.13\bar{X}=1.16$	$0.39\bar{X}=0.60$
1,2-Dichlorobenzene	$0.80C=0.28$	$0.20\bar{X}=0.47$	$0.24\bar{X}=0.39$
1,3-Dichlorobenzene	$0.86C-0.70$	$0.25\bar{X}=0.68$	$0.41\bar{X}=0.11$
1,4-Dichlorobenzene	$0.73C-1.47$	$0.24\bar{X}=0.23$	$0.29\bar{X}=0.36$
3,3′-Dichlorobenzidine	$1.23C-12.65$	$0.28\bar{X}=7.33$	$0.47\bar{X}=3.45$
Dieldrin	$0.82C-0.16$	$0.20\bar{X}-0.16$	$0.26\bar{X}-0.07$
Diethyl phthalate	$0.43C=1.00$	$0.28\bar{X}=1.44$	$0.52\bar{X}=0.22$
Dimethyl phthalate	$0.20C=1.03$	$0.54\bar{X}=0.19$	$1.05\bar{X}-0.92$
2,4-Dinitrotoluene	$0.92C-4.81$	$0.12\bar{X}=1.06$	$0.21\bar{X}=1.50$
2,6-Dinitrotoluene	$1.06C-3.60$	$0.14\bar{X}=1.26$	$0.19\bar{X}=0.35$
Di-n-octyl phthalate	$0.76C-0.79$	$0.21\bar{X}=1.19$	$0.37\bar{X}=1.19$
Endosulfan sulfate	$0.39C=0.41$	$0.12\bar{X}=2.47$	$0.63\bar{X}-1.03$
Endrin aldehyde	$0.76C-3.86$	$0.18\bar{X}=3.91$	$0.73\bar{X}-0.62$
Fluoranthene	$0.81C=1.10$	$0.22\bar{X}-0.73$	$0.28\bar{X}-0.60$
Fluorene	$0.90C-0.00$	$0.12\bar{X}=0.26$	$0.13\bar{X}=0.61$
Heptachlor	$0.87C-2.97$	$0.24\bar{X}-0.56$	$0.50\bar{X}-0.23$
Heptachlor epoxide	$0.92C-1.87$	$0.33\bar{X}-0.46$	$0.28\bar{X}=0.64$
Hexachlorobenzene	$0.74C=0.66$	$0.18\bar{X}-0.10$	$0.43\bar{X}-0.52$
Hexachlorobutadiene	$0.71C-1.01$	$0.19\bar{X}=0.92$	$0.26\bar{X}=0.49$
Hexachloroethane	$0.73C-0.83$	$0.17\bar{X}=0.67$	$0.17\bar{X}=0.80$
Indeno(1,2,3-cd)pyrene	$0.78C-3.10$	$0.29\bar{X}=1.46$	$0.50\bar{X}=0.44$
Isophorone	$1.12C=1.41$	$0.27\bar{X}=0.77$	$0.33\bar{X}=0.26$
Naphthalene	$0.76C=1.58$	$0.21\bar{X}-0.41$	$0.30\bar{X}-0.68$

TABLE 7—METHOD ACCURACY AND PRECISION AS FUNCTIONS OF CONCENTRATION—METHOD 625—Continued

Parameter	Accuracy, as recovery, X′ (μg/L)	Single analyst precision, s_r’ (μg/L)	Overall precision, S′ (μg/L)
Nitrobenzene	$1.09C-3.05$	$0.19\bar{X}=0.92$	$0.27\bar{X}=0.21$
N-Nitrosodi-n-propylamine	$1.12C-6.22$	$0.27\bar{X}=0.68$	$0.44\bar{X}=0.47$
PCB–1260	$0.81C-10.86$	$0.35\bar{X}=3.61$	$0.43\bar{X}=1.82$
Phenanthrene	$0.87C-0.06$	$0.12\bar{X}=0.57$	$0.15\bar{X}=0.25$
Pyrene	$0.84C-0.16$	$0.16\bar{X}=0.06$	$0.15\bar{X}=0.31$
1,2,4-Trichlorobenzene	$0.94C-0.79$	$0.15\bar{X}=0.85$	$0.21\bar{X}=0.39$
4-Chloro-3-methylphenol	$0.84C=0.35$	$0.23\bar{X}=0.75$	$0.29\bar{X}=1.31$
2-Chlorophenol	$0.78C=0.29$	$0.18\bar{X}=1.46$	$0.28\bar{X}=0.97$
2,4-Dichlorophenol	$0.87C=0.13$	$0.15\bar{X}=1.25$	$0.21\bar{X}=1.28$
2,4-Dimethylphenol	$0.71C=4.41$	$0.16\bar{X}=1.21$	$0.22\bar{X}=1.31$
2,4-Dinitrophenol	$0.81C-18.04$	$0.38\bar{X}=2.36$	$0.42\bar{X}=26.29$
2-Methyl-4,6-Dinitrophenol	$1.04C-28.04$	$0.05\bar{X}=42.29$	$0.26\bar{X}=23.10$
2-Nitrophenol	$1.07C-1.15$	$0.16\bar{X}=1.94$	$0.27\bar{X}=2.60$
4-Nitrophenol	$0.61C-1.22$	$0.38\bar{X}=2.57$	$0.44\bar{X}=3.24$
Pentachlorophenol	$0.93C=1.99$	$0.24\bar{X}=3.03$	$0.30\bar{X}=4.33$
Phenol	$0.43C=1.26$	$0.26\bar{X}=0.73$	$0.35\bar{X}=0.58$
2,4,6-Trichlorophenol	$0.91C-0.18$	$0.16\bar{X}=2.22$	$0.22\bar{X}=1.81$

X′=Expected recovery for one or more measurements of a sample containing a concentration of C, in μg/L.
s_r′=Expected single analyst standard deviation of measurements at an average concentration found of $\bar{X}$, in μg/L.
S′= Expected interlaboratory standard deviation of measurements at an average concentration found of $\bar{X}$, in μg/L.
C= True value for the concentration, in μg/L.
$\bar{X}$= Average recovery found for measurements of samples containing a concentration of C, in μg/L.
[a] The proper chemical name is 2,2′oxybis(1-chloropropane).

TABLE 8—SUGGESTED INTERNAL AND SURROGATE STANDARDS

Base/neutral fraction	Acid fraction
Aniline-d_5	2-Fluorophenol.
Anthracene-d_{10}	Pentafluorophenol.
Benzo(a)anthracene-d_{12}	Phenol-d_5
4,4′-Dibromobiphenyl	2-Perfluoromethyl phenol.
4,4′-Dibromooctafluorobiphenyl.	
Decafluorobiphenyl.	
$2,2^1$-Difluorobiphenyl	
4-Fluoroaniline	
1-Fluoronaphthalene	
2-Fluoronaphthalene	
Naphthalene-d_8	
Nitrobenzene-d_5	
2,3,4,5,6-Pentafluorobiphenyl	
Phenanthrene-d_{10}	
Pyridine-d_5	

TABLE 9—DFTPP KEY MASSES AND ABUNDANCE CRITERIA

Mass	m/z Abundance criteria
51	30–60 percent of mass 198.
68	Less than 2 percent of mass 69.
70	Less than 2 percent of mass 69.
127	40–60 percent of mass 198.
197	Less than 1 percent of mass 198.
198	Base peak, 100 percent relative abundance.
199	5–9 percent of mass 198.
275	10–30 percent of mass 198.
365	Greater than 1 percent of mass 198.
441	Present but less than mass 443.
442	Greater than 40 percent of mass 198.
443	17–23 percent of mass 442.

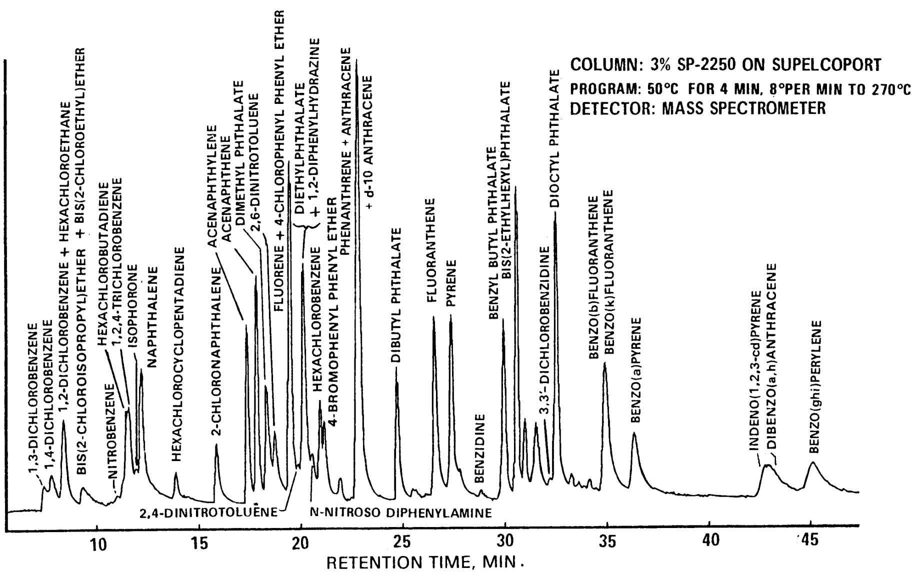

Figure 1. Gas chromatogram of base/neutral fraction.

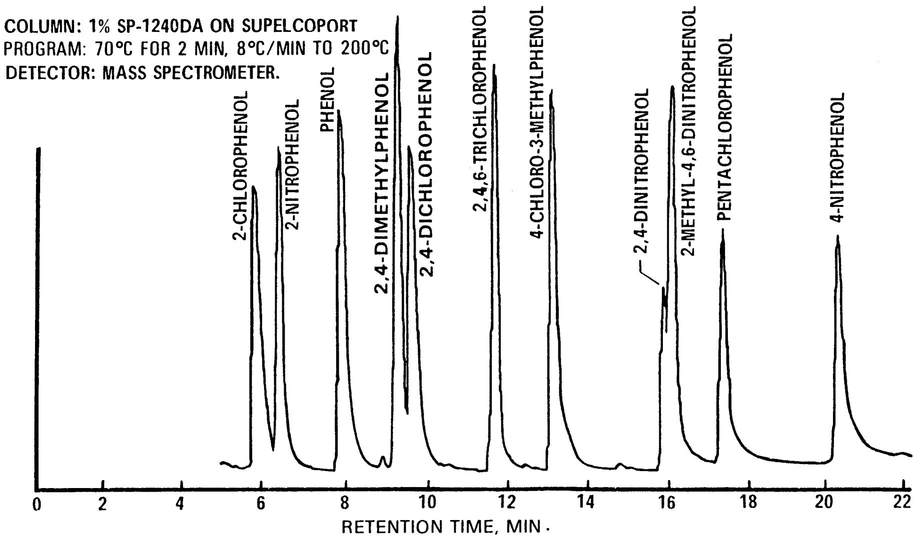

Figure 2. Gas chromatogram of acid fraction.

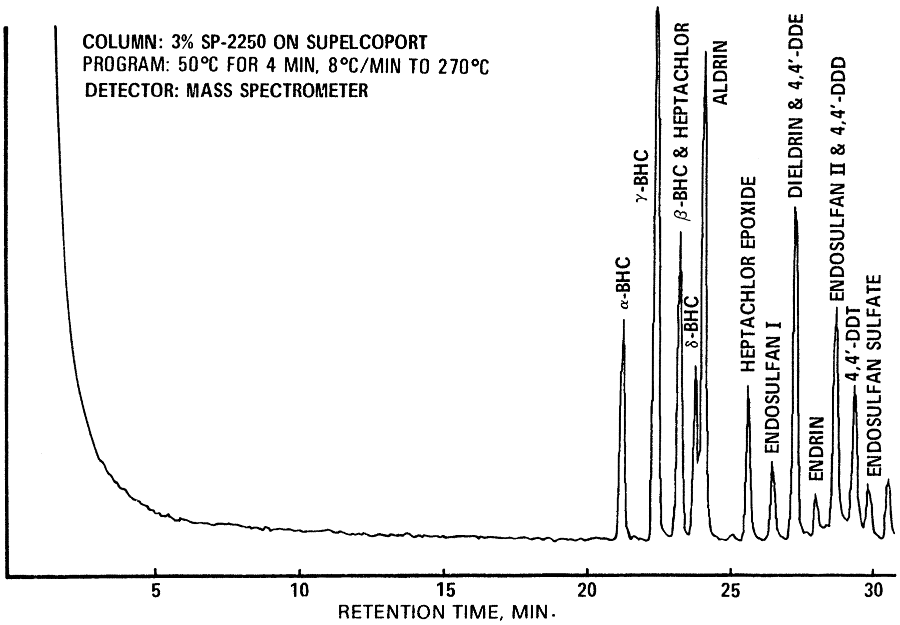

Figure 3. Gas chromatogram of pesticide fraction.

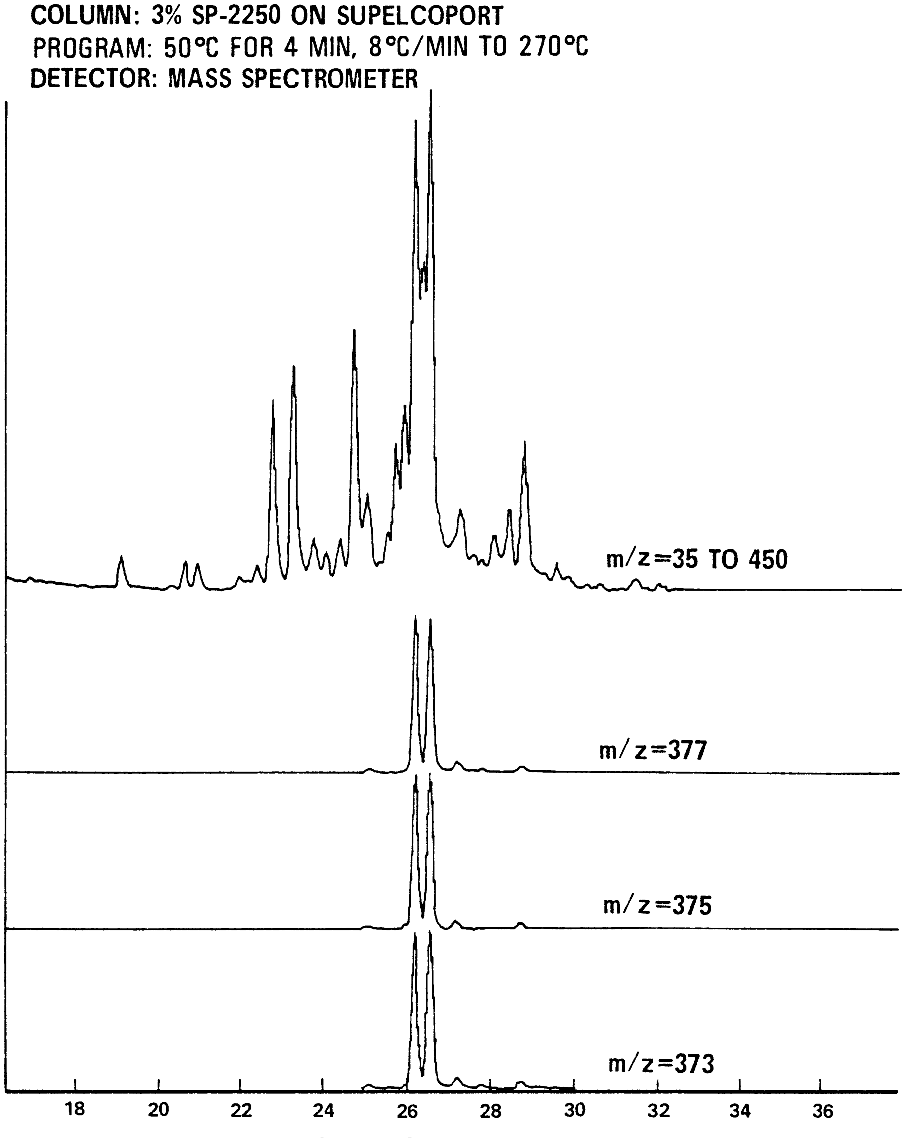

Figure 4. Gas chromatogram of chlordane.

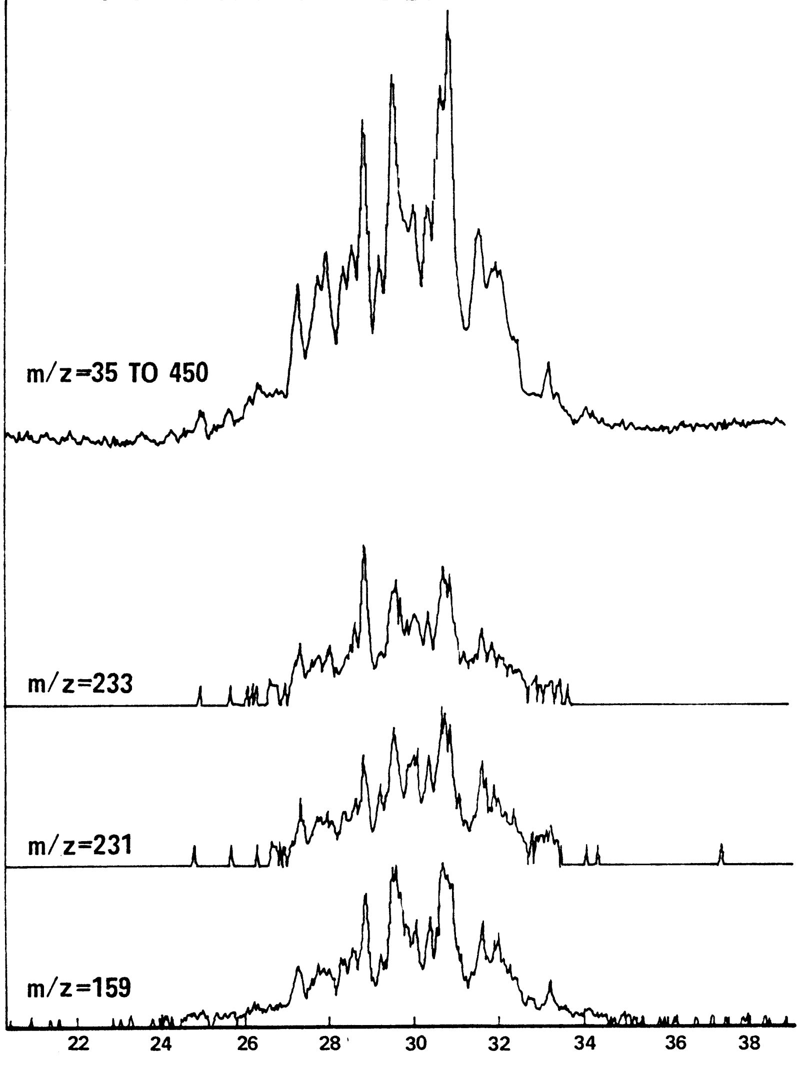

COLUMN: 3% SP-2250 ON SUPELCOPORT
PROGRAM: 50°C FOR 4 MIN, 8°C/MIN TO 270°C
DETECTOR: MASS SPECTROMETER

Figure 5. Gas chromatogram of toxaphene.

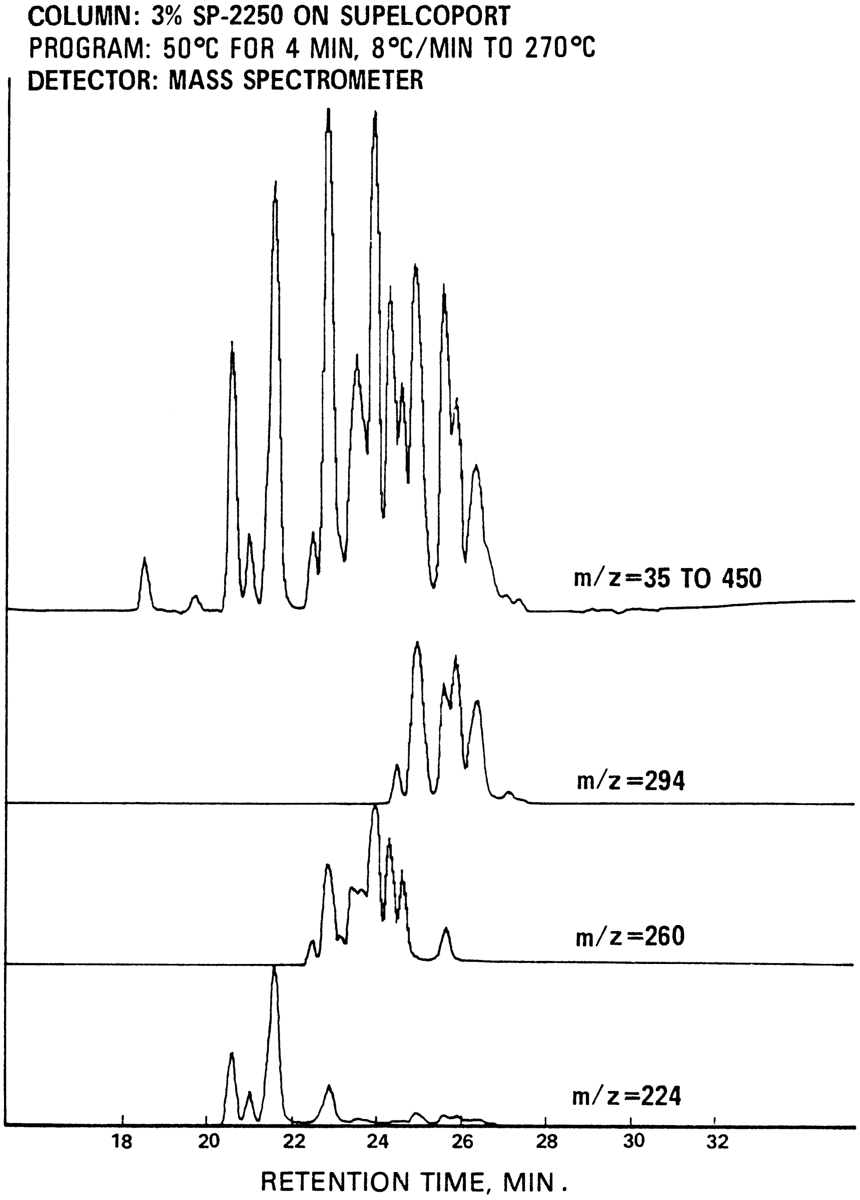

Figure 6. Gas chromatogram of PCB-1016.

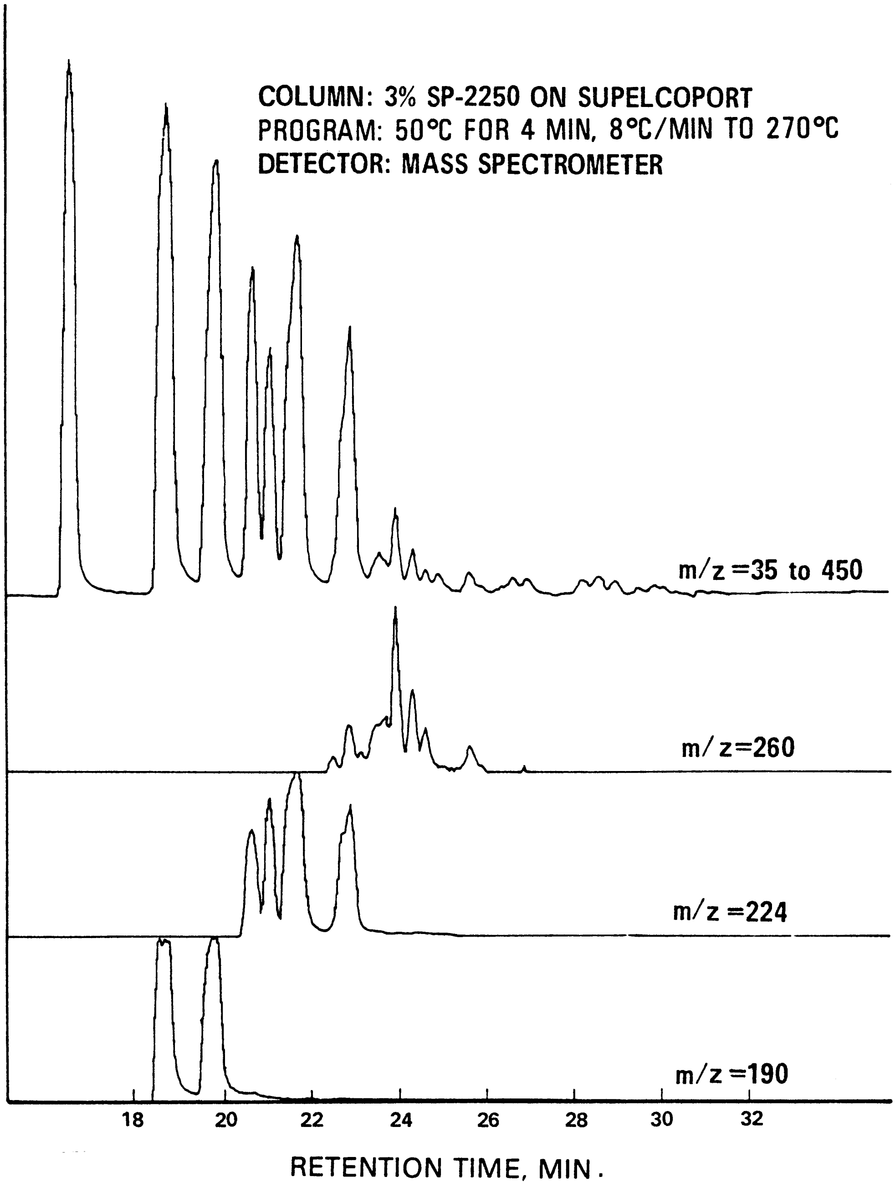

Figure 7. Gas chromatogram of PCB-1221.

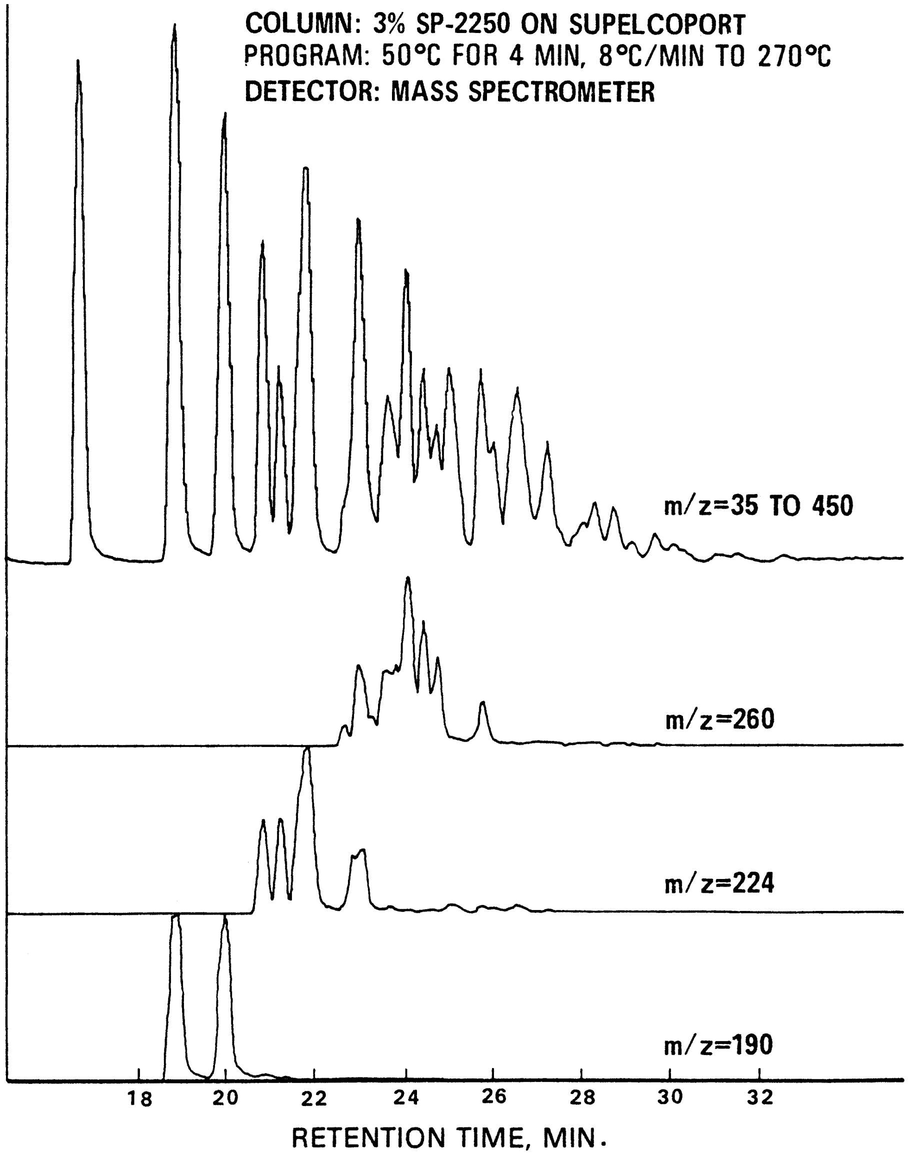

Figure 8. Gas chromatogram of PCB-1232.

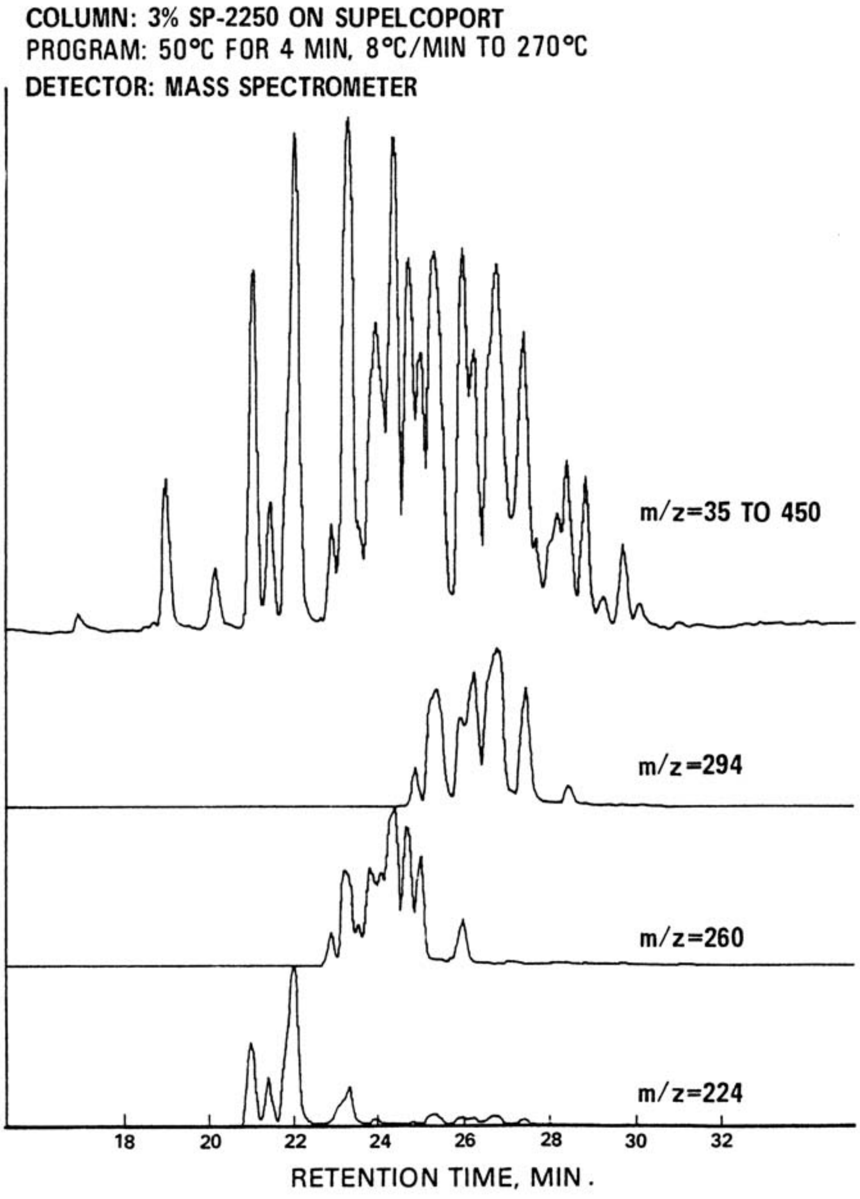

Figure 9. Gas chromatogram of PCB-1242.

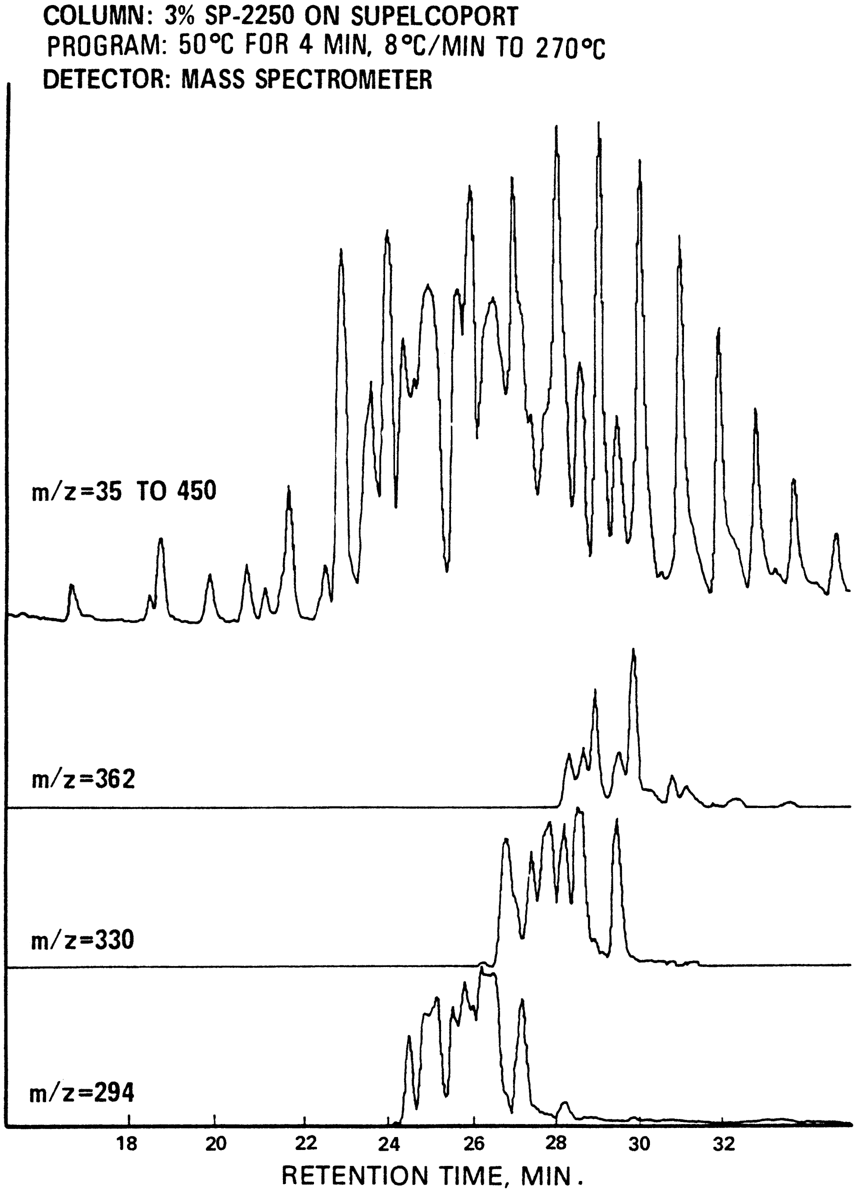

Figure 10. Gas chromatogram of PCB-1248.

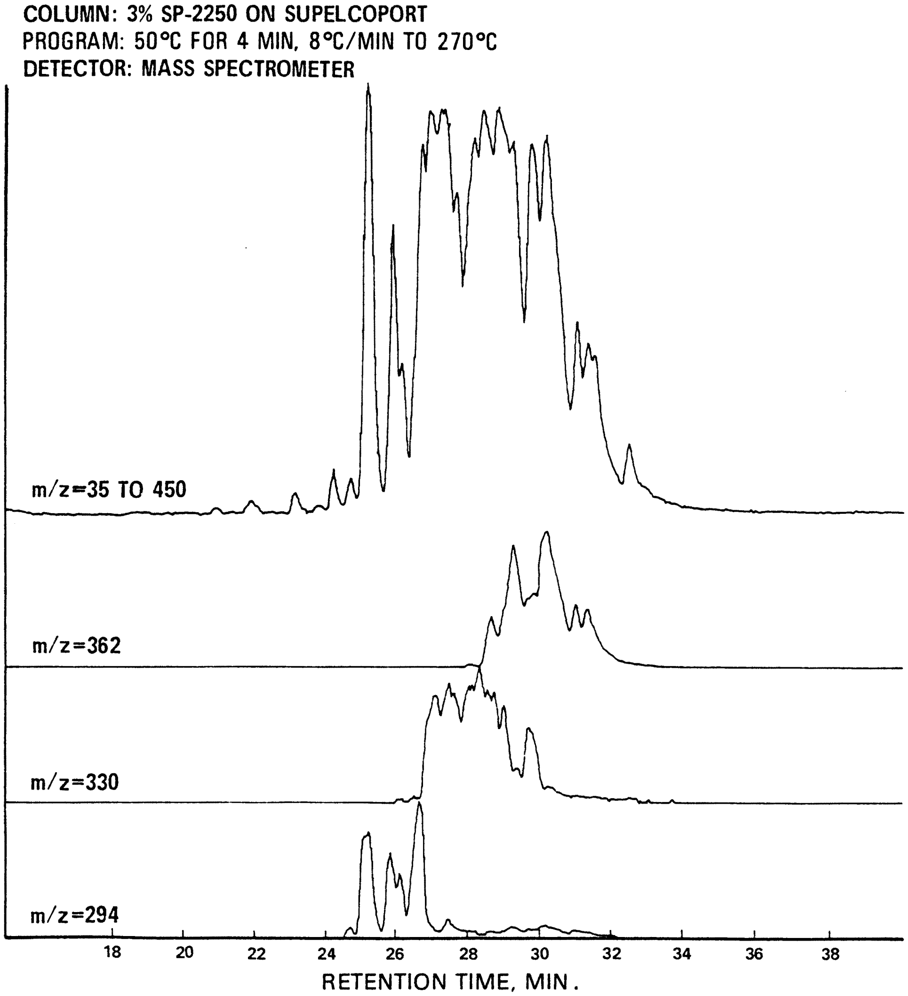

Figure 11. Gas chromatogram of PCB-1254.

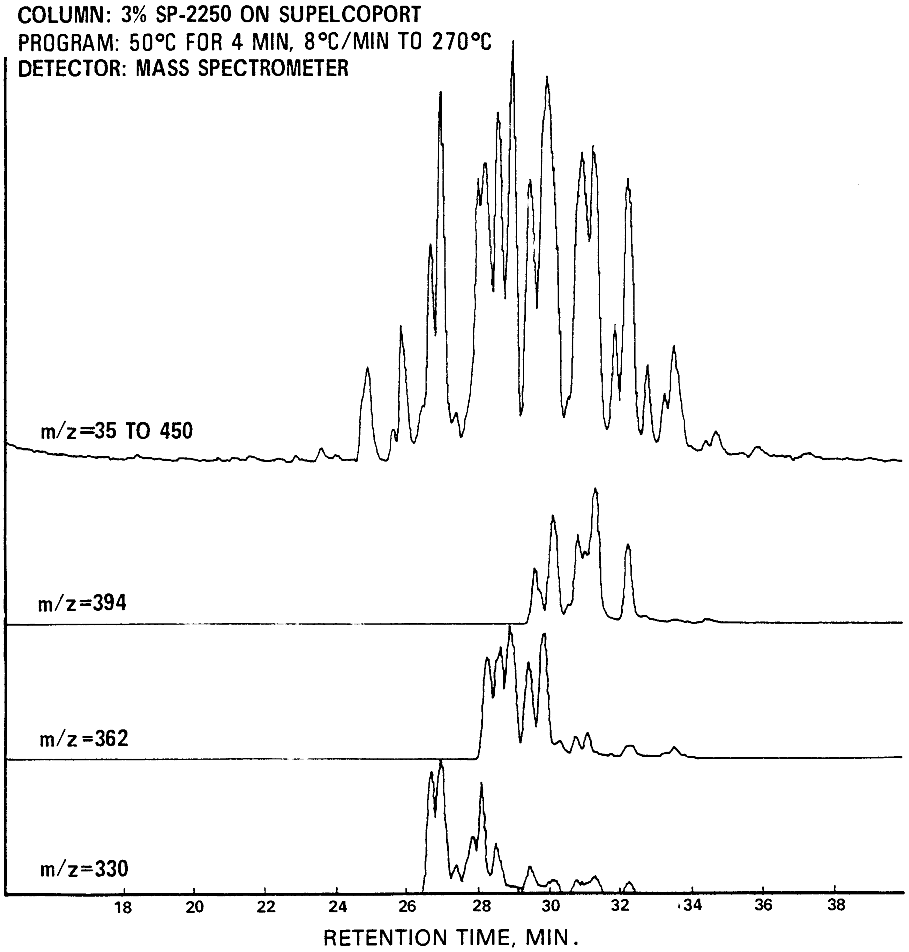

Figure 12. Gas chromatogram of PCB-1260.

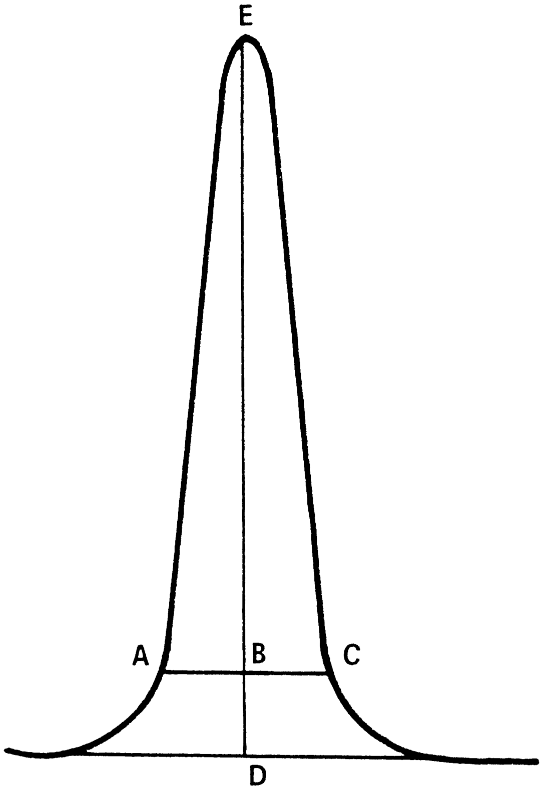

$$\text{TAILING FACTOR} = \frac{BC}{AB}$$

Example calculation: Peak Height = DE = 100 mm
10% Peak Height = BD = 10 mm
Peak Width at 10% Peak Height = AC = 23 mm
AB = 11 mm
BC = 12 mm

$$\text{Therefore: Tailing Factor} = \frac{12}{11} = 1.1$$

Figure 13. Tailing factor calculation.

ATTACHMENT 1 TO METHOD 625

INTRODUCTION

To support measurement of several semivolatile pollutants, EPA has developed this attachment to EPA Method 625.[1] The modifications listed in this attachment are approved only for monitoring wastestreams from the Centralized Waste Treatment Point Source Category (40 CFR part 437) and the Landfills Point Source Category (40 CFR part 445). EPA Method 625 (the Method) involves sample extraction with methylene chloride followed by analysis of the extract using either packed or capillary column gas chromatography/mass spectrometry (GC/MS). This attachment addresses the addition of the semivolatile pollutants listed in Tables 1 and 2, to all applicable standard, stock, and spiking solutions utilized for the determination of semivolatile organic compounds by EPA Method 625.

1.0 EPA METHOD 625 MODIFICATION SUMMARY

The additional semivolatile organic compounds listed in Tables 1 and 2 are added to all applicable calibration, spiking, and other solutions utilized in the determination of base/neutral and acid compounds by EPA Method 625. The instrument is to be calibrated with these compounds, using a capillary column, and all procedures and quality control tests stated in the Method must be performed.

2.0 SECTION MODIFICATIONS

NOTE: All section and figure numbers in this Attachment reference section and figure numbers in EPA Method 625 unless noted otherwise. Sections not listed here remain unchanged.

Section 6.7 The stock standard solutions described in this section are modified such that the analytes in Tables 1 and 2 of this attachment are required in addition to those specified in the Method.

Section 7.2 The calibration standards described in this section are modified to include the analytes in Tables 1 and 2 of this attachment.

Section 8.2 The precision and accuracy requirements are modified to include the analytes listed in Tables 1 and 2 of this attachment. Additional performance criteria are supplied in Table 5 of this attachment.

Section 8.3 The matrix spike is modified to include the analytes listed in Tables 1 and 2 of this attachment.

Section 8.4 The QC check standard is modified to include the analytes listed in Tables 1 and 2 of this attachment. Additional performance criteria are supplied in Table 5 of this attachment.

Section 16.0 Additional method performance information is supplied with this attachment.

TABLE 1—BASE/NEUTRAL EXTRACTABLES

Parameter	CAS No.
acetophenone[1]	98–86–2
alpha-terpineol[3]	98–55–5
aniline[2]	62–53–3
carbazole[1]	86–74–8
o-cresol[1]	95–48–7
n-decane[1]	124–18–5
2,3-dichloroaniline[1]	608–27–5
n-octadecane[1]	593–45–3
pyridine[2]	110–86–1

CAS = Chemical Abstracts Registry.

[1] Analysis of this pollutant is approved only for the Centralized Waste Treatment industry.

[2] Analysis of this pollutant is approved only for the Centralized Waste Treatment and Landfills industries.

[3] Analysis of this pollutant is approved only for the Landfills industry.

TABLE 2—ACID EXTRACTABLES

Parameter	CAS No.
p-cresol[1]	106–44–5

CAS = Chemical Abstracts Registry.

[1] Analysis of this pollutant is approved only for the Centralized Waste Treatment and Landfills industries.

TABLE 3—CHROMATOGRAPHIC CONDITIONS,[1] METHOD DETECTION LIMITS (MDLS), AND CHARACTERISTIC M/Z'S FOR BASE/NEUTRAL EXTRACTABLES

Analyte	Retention time (min)[2]	MDL (µg/L)	Characteristic m/z's		
			Electron impact		
			Primary	Secondary	Secondary
pyridine[3]	4.93	4.6	79	52	51
N-Nitro sodimethylamine	4.95		42	74	44
aniline[3]	10.82	3.3	93	66	65
Bis(2-chloroethyl)ether	10.94		93	63	95
n-decane[4]	11.11	5.0	57		
1,3-Dichlorobenzene	11.47		146	148	113
1,4-Dichlorobenzene	11.62		146	148	113
1,2-Dichlorobenzene	12.17		146	148	113

---

[1] EPA Method 625: Base/Neutrals and Acids, 40 CFR part 136, appendix A.

TABLE 3—CHROMATOGRAPHIC CONDITIONS,[1] METHOD DETECTION LIMITS (MDLS), AND CHARACTERISTIC M/Z'S FOR BASE/NEUTRAL EXTRACTABLES—Continued

Analyte	Retention time (min)[2]	MDL (µg/L)	Characteristic m/z's		
			Electron impact		
			Primary	Secondary	Secondary
o-creso[1]	12.48	4.7	108	107	79
Bis(2-chloro- isopropyl)ether	12.51		45	77	79
acetophenone[4]	12.88	3.4	105	77	51
N-Nitrosodi-n-propylamine	12.97		130	42	101
Hexachloroethane	13.08		117	201	199
Nitrobenzene	13.40		77	123	65
Isophorone	14.11		82	95	138
Bis (2-chloro ethoxy)methane	14.82		93	95	123
1,2,4-Trichlorobenzene	15.37		180	182	145
alpha-terpineol	15.55	5.0	59		
Naphthalene	15.56		128	129	127
Hexachlorobutadiene	16.12		225	223	227
Hexachlorocyclopentadiene	18.47		237	235	272
2,3-dichloroaniline[4]	18.82	2.5	161	163	90
2-Chloronaphthalene	19.35		162	164	127
Dimethyl phthalate	20.48		163	194	164
Acenaphthylene	20.69		152	151	153
2,6-Dinitrotoluene	20.73		165	89	121
Acenaphthene	21.30		154	153	152
2,4-Dinitrotoluene	22.00		165	63	182
Diethylphthalate	22.74		149	177	150
4-Chlorophenyl phenyl ether	22.90		204	206	141
Fluorene	22.92		166	165	167
N-Nitro sodiphenylamine	23.35		169	168	167
4-Bromophenyl phenyl ether	24.44		248	250	141
Hexachlorobenzene	24.93		284	142	249
n-octadecane[4]	25.39	2.0	57		
Phenanthrene	25.98		178	179	176
Anthracene	26.12		178	179	176
Carbazole[4]	26.66	4.0	167		
Dibutyl phthalate	27.84		149	150	104
Fluoranthene	29.82		202	101	100
Benzidine	30.26		184	92	185
Pyrene	30.56		202	101	100
Butyl benzyl phthalate	32.63		149	91	206
3,3′-Dichlorobenzidine	34.28		252	254	126
Benzo(a)anthracene	34.33		228	229	226
Bis(2-ethyl hexyl)phthalate	34.36		149	167	279
Chrysene	34.44		228	226	229
Di-n-octyl-phthalate	36.17		149		
Benzo(b)fluoranthene	37.90		252	253	125
Benzo(k)fluoranthene	37.97		252	253	125
Benzo(a)pyrene	39.17		252	253	125
Dibenzo(a,h) anthracene	44.91		278	139	279
Indeno(1,2,3-c,d)pyrene	45.01		276	138	277
Benzo(ghi)perylene	46.56		276	138	277

[1] The data presented in this table were obtained under the following conditions:

Column—30 ±5 meters × 0.25 ±.02 mm i.d., 94% methyl, 5% phenyl, 1% vinyl, bonded phase fused silica capillary column (DB–5).

Temperature program—Five minutes at 30 °C; 30–280 °C at 8 °C per minute; isothermal at 280 °C until benzo(ghi)perylene elutes.

Gas velocity—30 ±5 cm/sec at 30 °C.

[2] Retention times are from Method 1625, Revision C, using a capillary column, and are intended to be consistent for all analytes in Tables 4 and 5 of this attachment.

[3] Analysis of this pollutant is approved only for the Centralized Waste Treatment and Landfills industries.

[4] Analysis of this pollutant is approved only for the Centralized Waste Treatment industry.

TABLE 4—CHROMATOGRAPHIC CONDITIONS,[1] METHOD DETECTION LIMITS (MDLS), AND CHARACTERISTIC M/Z'S FOR ACID EXTRACTABLES

Analyte	Retention time[2] (min)	MDL (µg/L)	Characteristic m/z's		
			Electron impact		
			Primary	Secondary	Secondary
Phenol	10.76		94	65	66
2-Chlorophenol	11.08		128	64	130

TABLE 4—CHROMATOGRAPHIC CONDITIONS,[1] METHOD DETECTION LIMITS (MDLS), AND CHARACTERISTIC M/Z'S FOR ACID EXTRACTABLES—Continued

Analyte	Retention time[2] (min)	MDL (µg/L)	Characteristic m/z's		
			Electron impact		
			Primary	Secondary	Secondary
p-cresol[3]	12.92	7.8	108	107	77
2-Nitrophenol	14.38	....	139	65	109
2,4-Dimethylphenol	14.54	....	122	107	121
2,4-Dichlorophenol	15.12	....	162	164	98
4-Chloro-3-methylphenol	16.83	....	142	107	144
2,4,6-Trichlorophenol	18.80	....	196	198	200
2,4-Dinitrophenol	21.51	....	184	63	154
4-Nitrophenol	21.77	....	65	139	109
2-Methyl-4,6-dinitrophenol	22.83	....	198	182	77
Pentachlorophenol	25.52	....	266	264	268

[1] The data presented in this table were obtained under the following conditions:

Column—30 ±5 meters × 0.25 ±.02 mm i.d., 94% methyl, 5% phenyl, 1% vinyl silicone bonded phase fused silica capillary column (DB–5).

Temperature program—Five minutes at 30 °C; 30–280 °C at 8 °C per minute; isothermal at 280 °C until benzo(ghi)perylene elutes.

Gas velocity—30 ±5 cm/sec at 30 °C

[2] Retention times are from EPA Method 1625, Revision C, using a capillary column, and are intended to be consistent for all analytes in Tables 3 and 4 of this attachment.

[3] Analysis of this pollutant is approved only for the Centralized Waste Treatment and Landfills industries.

TABLE 5—QC ACCEPTANCE CRITERIA

Analyte	Test conclusion (µg/L)	Limits for s (µg/L)	Range for X (µg/L)	Range for P, P_s(%)
acetophenone[1]	100	51	23–254	61–144
alpha-terpineol	100	47	46–163	58–156
aniline[2]	100	71	15–278	46–134
carbazole[1]	100	17	79–111	73–131
o-cresol[1]	100	23	30–146	55–126
p-cresol[2]	100	22	11–617	76–107
n-decane[1]	100	70	D–651	D-ns
2,3-dichloroaniline[1]	100	13	40–160	68–134
n-octadecane[1]	100	10	52–147	65–123
pyridine[2]	100	ns	7–392	33–158

s = Standard deviation for four recovery measurements, in µg/L (Section 8.2)
X = Average recovery for four recovery measurements in µg/L (Section 8.2)
P,Ps = Percent recovery measured (Section 8.3, Section 8.4)
D = Detected; result must be greater than zero.
ns = no specification; limit is outside the range that can be measured reliably.

[1] Analysis of this pollutant is approved only for the Centralized Waste Treatment industry.

[2] Analysis of this pollutant is approved only for the Centralized Waste Treatment and Landfills industries.

METHOD 1613, REVISION B

Tetra- Through Octa-Chlorinated Dioxins and Furans by Isotope Dilution HRGC/HRMS

1.0 Scope and Application

1.1 This method is for determination of tetra- through octa-chlorinated dibenzo-p-dioxins (CDDs) and dibenzofurans (CDFs) in water, soil, sediment, sludge, tissue, and other sample matrices by high resolution gas chromatography/high resolution mass spectrometry (HRGC/HRMS). The method is for use in EPA's data gathering and monitoring programs associated with the Clean Water Act, the Resource Conservation and Recovery Act, the Comprehensive Environmental Response, Compensation and Liability Act, and the Safe Drinking Water Act. The method is based on a compilation of EPA, industry, commercial laboratory, and academic methods (References 1–6).

1.2 The seventeen 2,3,7,8-substituted CDDs/CDFs listed in Table 1 may be determined by this method. Specifications are also provided for separate determination of 2,3,7,8-tetrachloro-dibenzo-p-dioxin (2,3,7,8-TCDD) and 2,3,7,8-tetrachloro-dibenzofuran (2,3,7,8-TCDF).

1.3 The detection limits and quantitation levels in this method are usually dependent on the level of interferences rather than instrumental limitations. The minimum levels (MLs) in Table 2 are the levels at which the CDDs/CDFs can be determined with no interferences present. The Method Detection

Limit (MDL) for 2,3,7,8-TCDD has been determined as 4.4 pg/L (parts-per-quadrillion) using this method.

1.4 The GC/MS portions of this method are for use only by analysts experienced with HRGC/HRMS or under the close supervision of such qualified persons. Each laboratory that uses this method must demonstrate the ability to generate acceptable results using the procedure in Section 9.2.

1.5 This method is ''performance-based''. The analyst is permitted to modify the method to overcome interferences or lower the cost of measurements, provided that all performance criteria in this method are met. The requirements for establishing method equivalency are given in Section 9.1.2.

1.6 Any modification of this method, beyond those expressly permitted, shall be considered a major modification subject to application and approval of alternate test procedures under 40 CFR 136.4 and 136.5.

2.0 Summary of Method

Flow charts that summarize procedures for sample preparation, extraction, and analysis are given in Figure 1 for aqueous and solid samples, Figure 2 for multi-phase samples, and Figure 3 for tissue samples.

2.1 Extraction.

2.1.1 Aqueous samples (samples containing less than 1% solids)—Stable isotopically labeled analogs of 15 of the 2,3,7,8-substituted CDDs/CDFs are spiked into a 1 L sample, and the sample is extracted by one of three procedures:

2.1.1.1 Samples containing no visible particles are extracted with methylene chloride in a separatory funnel or by the solid-phase extraction technique summarized in Section 2.1.1.3. The extract is concentrated for cleanup.

2.1.1.2 Samples containing visible particles are vacuum filtered through a glass-fiber filter. The filter is extracted in a Soxhlet/Dean-Stark (SDS) extractor (Reference 7), and the filtrate is extracted with methylene chloride in a separatory funnel. The methylene chloride extract is concentrated and combined with the SDS extract prior to cleanup.

2.1.1.3 The sample is vacuum filtered through a glass-fiber filter on top of a solid-phase extraction (SPE) disk. The filter and disk are extracted in an SDS extractor, and the extract is concentrated for cleanup.

2.1.2 Solid, semi-solid, and multi-phase samples (but not tissue)—The labeled compounds are spiked into a sample containing 10 g (dry weight) of solids. Samples containing multiple phases are pressure filtered and any aqueous liquid is discarded. Coarse solids are ground or homogenized. Any non-aqueous liquid from multi-phase samples is combined with the solids and extracted in an SDS extractor. The extract is concentrated for cleanup.

2.1.3 Fish and other tissue—The sample is extracted by one of two procedures:

2.1.3.1 Soxhlet or SDS extraction—A 20 g aliquot of sample is homogenized, and a 10 g aliquot is spiked with the labeled compounds. The sample is mixed with sodium sulfate, allowed to dry for 12–24 hours, and extracted for 18–24 hours using methylene chloride:hexane (1:1) in a Soxhlet extractor. The extract is evaporated to dryness, and the lipid content is determined.

2.1.3.2 HCl digestion—A 20 g aliquot is homogenized, and a 10 g aliquot is placed in a bottle and spiked with the labeled compounds. After equilibration, 200 mL of hydrochloric acid and 200 mL of methylene chloride:hexane (1:1) are added, and the bottle is agitated for 12–24 hours. The extract is evaporated to dryness, and the lipid content is determined.

2.2 After extraction, $^{37}Cl_4$-labeled 2,3,7,8-TCDD is added to each extract to measure the efficiency of the cleanup process. Sample cleanups may include back-extraction with acid and/or base, and gel permeation, alumina, silica gel, Florisil and activated carbon chromatography. High-performance liquid chromatography (HPLC) can be used for further isolation of the 2,3,7,8-isomers or other specific isomers or congeners. Prior to the cleanup procedures cited above, tissue extracts are cleaned up using an anthropogenic isolation column, a batch silica gel adsorption, or sulfuric acid and base back-extraction, depending on the tissue extraction procedure used.

2.3 After cleanup, the extract is concentrated to near dryness. Immediately prior to injection, internal standards are added to each extract, and an aliquot of the extract is injected into the gas chromatograph. The analytes are separated by the GC and detected by a high-resolution (≥10,000) mass spectrometer. Two exact m/z's are monitored for each analyte.

2.4 An individual CDD/CDF is identified by comparing the GC retention time and ion-abundance ratio of two exact m/z's with the corresponding retention time of an authentic standard and the theoretical or acquired ion-abundance ratio of the two exact m/z's. The non-2,3,7,8 substituted isomers and congeners are identified when retention times and ion-abundance ratios agree within predefined limits. Isomer specificity for 2,3,7,8-TCDD and 2,3,7,8-TCDF is achieved using GC columns that resolve these isomers from the other tetra-isomers.

2.5 Quantitative analysis is performed using selected ion current profile (SICP) areas, in one of three ways:

2.5.1 For the 15 2,3,7,8-substituted CDDs/CDFs with labeled analogs (see Table 1), the GC/MS system is calibrated, and the concentration of each compound is determined using the isotope dilution technique.

2.5.2 For 1,2,3,7,8,9-HxCDD, OCDF, and the labeled compounds, the GC/MS system is calibrated and the concentration of each compound is determined using the internal standard technique.

2.5.3 For non-2,3,7,8-substituted isomers and for all isomers at a given level of chlorination (*i.e.*, total TCDD), concentrations are determined using response factors from calibration of the CDDs/CDFs at the same level of chlorination.

2.6 The quality of the analysis is assured through reproducible calibration and testing of the extraction, cleanup, and GC/MS systems.

3.0 Definitions

Definitions are given in the glossary at the end of this method.

4.0 Contamination and Interferences

4.1 Solvents, reagents, glassware, and other sample processing hardware may yield artifacts and/or elevated baselines causing misinterpretation of chromatograms (References 8–9). Specific selection of reagents and purification of solvents by distillation in all-glass systems may be required. Where possible, reagents are cleaned by extraction or solvent rinse.

4.2 Proper cleaning of glassware is extremely important, because glassware may not only contaminate the samples but may also remove the analytes of interest by adsorption on the glass surface.

4.2.1 Glassware should be rinsed with solvent and washed with a detergent solution as soon after use as is practical. Sonication of glassware containing a detergent solution for approximately 30 seconds may aid in cleaning. Glassware with removable parts, particularly separatory funnels with fluoropolymer stopcocks, must be disassembled prior to detergent washing.

4.2.2 After detergent washing, glassware should be rinsed immediately, first with methanol, then with hot tap water. The tap water rinse is followed by another methanol rinse, then acetone, and then methylene chloride.

4.2.3 Do not bake reusable glassware in an oven as a routine part of cleaning. Baking may be warranted after particularly dirty samples are encountered but should be minimized, as repeated baking of glassware may cause active sites on the glass surface that will irreversibly adsorb CDDs/CDFs.

4.2.4 Immediately prior to use, the Soxhlet apparatus should be pre-extracted with toluene for approximately three hours (see Sections 12.3.1 through 12.3.3). Separatory funnels should be shaken with methylene chloride/toluene (80/20 mixture) for two minutes, drained, and then shaken with pure methylene chloride for two minutes.

4.3 All materials used in the analysis shall be demonstrated to be free from interferences by running reference matrix method blanks initially and with each sample batch (samples started through the extraction process on a given 12-hour shift, to a maximum of 20 samples).

4.3.1 The reference matrix must simulate, as closely as possible, the sample matrix under test. Ideally, the reference matrix should not contain the CDDs/CDFs in detectable amounts, but should contain potential interferents in the concentrations expected to be found in the samples to be analyzed. For example, a reference sample of human adipose tissue containing pentachloronaphthalene can be used to exercise the cleanup systems when samples containing pentachloronaphthalene are expected.

4.3.2 When a reference matrix that simulates the sample matrix under test is not available, reagent water (Section 7.6.1) can be used to simulate water samples; playground sand (Section 7.6.2) or white quartz sand (Section 7.3.2) can be used to simulate soils; filter paper (Section 7.6.3) can be used to simulate papers and similar materials; and corn oil (Section 7.6.4) can be used to simulate tissues.

4.4 Interferences coextracted from samples will vary considerably from source to source, depending on the diversity of the site being sampled. Interfering compounds may be present at concentrations several orders of magnitude higher than the CDDs/CDFs. The most frequently encountered interferences are chlorinated biphenyls, methoxy biphenyls, hydroxydiphenyl ethers, benzylphenyl ethers, polynuclear aromatics, and pesticides. Because very low levels of CDDs/CDFs are measured by this method, the elimination of interferences is essential. The cleanup steps given in Section 13 can be used to reduce or eliminate these interferences and thereby permit reliable determination of the CDDs/CDFs at the levels shown in Table 2.

4.5 Each piece of reusable glassware should be numbered to associate that glassware with the processing of a particular sample. This will assist the laboratory in tracking possible sources of contamination for individual samples, identifying glassware associated with highly contaminated samples that may require extra cleaning, and determining when glassware should be discarded.

4.6 Cleanup of tissue—The natural lipid content of tissue can interfere in the analysis of tissue samples for the CDDs/CDFs. The lipid contents of different species and portions of tissue can vary widely. Lipids are soluble to varying degrees in various organic solvents and may be present in sufficient quantity to overwhelm the column chromatographic cleanup procedures used for cleanup of sample extracts. Lipids must be removed by the lipid removal procedures in Section 13.7, followed by alumina (Section 13.4) or Florisil (Section 13.8), and carbon (Section 13.5) as minimum additional cleanup steps. If chlorodiphenyl ethers are detected, as indicated by the presence of peaks at the exact m/z's monitored for these interferents, alumina and/or Florisil cleanup must be employed to eliminate these interferences.

5.0 Safety

5.1 The toxicity or carcinogenicity of each compound or reagent used in this method has not been precisely determined; however, each chemical compound should be treated as a potential health hazard. Exposure to these compounds should be reduced to the lowest possible level.

5.1.1 The 2,3,7,8-TCDD isomer has been found to be acnegenic, carcinogenic, and teratogenic in laboratory animal studies. It is soluble in water to approximately 200 ppt and in organic solvents to 0.14%. On the basis of the available toxicological and physical properties of 2,3,7,8-TCDD, all of the CDDs/CDFs should be handled only by highly trained personnel thoroughly familiar with handling and cautionary procedures and the associated risks.

5.1.2 It is recommended that the laboratory purchase dilute standard solutions of the analytes in this method. However, if primary solutions are prepared, they shall be prepared in a hood, and a NIOSH/MESA approved toxic gas respirator shall be worn when high concentrations are handled.

5.2 The laboratory is responsible for maintaining a current awareness file of OSHA regulations regarding the safe handling of the chemicals specified in this method. A reference file of material safety data sheets (MSDSs) should also be made available to all personnel involved in these analyses. It is also suggested that the laboratory perform personal hygiene monitoring of each analyst who uses this method and that the results of this monitoring be made available to the analyst. Additional information on laboratory safety can be found in References 10–13. The references and bibliography at the end of Reference 13 are particularly comprehensive in dealing with the general subject of laboratory safety.

5.3 The CDDs/CDFs and samples suspected to contain these compounds are handled using essentially the same techniques employed in handling radioactive or infectious materials. Well-ventilated, controlled access laboratories are required. Assistance in evaluating the health hazards of particular laboratory conditions may be obtained from certain consulting laboratories and from State Departments of Health or Labor, many of which have an industrial health service. The CDDs/CDFs are extremely toxic to laboratory animals. Each laboratory must develop a strict safety program for handling these compounds. The practices in References 2 and 14 are highly recommended.

5.3.1 Facility—When finely divided samples (dusts, soils, dry chemicals) are handled, all operations (including removal of samples from sample containers, weighing, transferring, and mixing) should be performed in a glove box demonstrated to be leak tight or in a fume hood demonstrated to have adequate air flow. Gross losses to the laboratory ventilation system must not be allowed. Handling of the dilute solutions normally used in analytical and animal work presents no inhalation hazards except in the case of an accident.

5.3.2 Protective equipment—Disposable plastic gloves, apron or lab coat, safety glasses or mask, and a glove box or fume hood adequate for radioactive work should be used. During analytical operations that may give rise to aerosols or dusts, personnel should wear respirators equipped with activated carbon filters. Eye protection equipment (preferably full face shields) must be worn while working with exposed samples or pure analytical standards. Latex gloves are commonly used to reduce exposure of the hands. When handling samples suspected or known to contain high concentrations of the CDDs/CDFs, an additional set of gloves can also be worn beneath the latex gloves.

5.3.3 Training—Workers must be trained in the proper method of removing contaminated gloves and clothing without contacting the exterior surfaces.

5.3.4 Personal hygiene—Hands and forearms should be washed thoroughly after each manipulation and before breaks (coffee, lunch, and shift).

5.3.5 Confinement—Isolated work areas posted with signs, segregated glassware and tools, and plastic absorbent paper on bench tops will aid in confining contamination.

5.3.6 Effluent vapors—The effluents of sample splitters from the gas chromatograph (GC) and from roughing pumps on the mass spectrometer (MS) should pass through either a column of activated charcoal or be bubbled through a trap containing oil or high-boiling alcohols to condense CDD/CDF vapors.

5.3.7 Waste Handling—Good technique includes minimizing contaminated waste. Plastic bag liners should be used in waste cans. Janitors and other personnel must be trained in the safe handling of waste.

5.3.8 Decontamination

5.3.8.1 Decontamination of personnel—Use any mild soap with plenty of scrubbing action.

5.3.8.2 Glassware, tools, and surfaces—Chlorothene NU Solvent is the least toxic solvent shown to be effective. Satisfactory cleaning may be accomplished by rinsing with Chlorothene, then washing with any detergent and water. If glassware is first rinsed with solvent, then the dish water may be disposed of in the sewer. Given the cost of disposal, it is prudent to minimize solvent wastes.

5.3.9 Laundry—Clothing known to be contaminated should be collected in plastic bags. Persons who convey the bags and launder the clothing should be advised of the hazard and trained in proper handling. The clothing may be put into a washer without contact if the launderer knows of the potential problem. The washer should be run through a cycle before being used again for other clothing.

5.3.10 Wipe tests—A useful method of determining cleanliness of work surfaces and tools is to wipe the surface with a piece of filter paper. Extraction and analysis by GC with an electron capture detector (ECD) can achieve a limit of detection of 0.1 µg per wipe; analysis using this method can achieve an even lower detection limit. Less than 0.1 µg per wipe indicates acceptable cleanliness; anything higher warrants further cleaning. More than 10 µg on a wipe constitutes an acute hazard and requires prompt cleaning before further use of the equipment or work space, and indicates that unacceptable work practices have been employed.

5.3.11 Table or wrist-action shaker—The use of a table or wrist-action shaker for extraction of tissues presents the possibility of breakage of the extraction bottle and spillage of acid and flammable organic solvent. A secondary containment system around the shaker is suggested to prevent the spread of acid and solvents in the event of such a breakage. The speed and intensity of shaking action should also be adjusted to minimize the possibility of breakage.

6.0 Apparatus and Materials

NOTE: Brand names, suppliers, and part numbers are for illustration purposes only and no endorsement is implied. Equivalent performance may be achieved using apparatus and materials other than those specified here. Meeting the performance requirements of this method is the responsibility of the laboratory.

6.1 Sampling Equipment for Discrete or Composite Sampling

6.1.1 Sample bottles and caps

6.1.1.1 Liquid samples (waters, sludges and similar materials containing 5% solids or less)—Sample bottle, amber glass, 1.1 L minimum, with screw cap.

6.1.1.2 Solid samples (soils, sediments, sludges, paper pulps, filter cake, compost, and similar materials that contain more than 5% solids)—Sample bottle, wide mouth, amber glass, 500 mL minimum.

6.1.1.3 If amber bottles are not available, samples shall be protected from light.

6.1.1.4 Bottle caps—Threaded to fit sample bottles. Caps shall be lined with fluoropolymer.

6.1.1.5 Cleaning

6.1.1.5.1 Bottles are detergent water washed, then solvent rinsed before use.

6.1.1.5.2 Liners are detergent water washed, rinsed with reagent water (Section 7.6.1) followed by solvent, and baked at approximately 200 °C for a minimum of 1 hour prior to use.

6.1.2 Compositing equipment—Automatic or manual compositing system incorporating glass containers cleaned per bottle cleaning procedure above. Only glass or fluoropolymer tubing shall be used. If the sampler uses a peristaltic pump, a minimum length of compressible silicone rubber tubing may be used in the pump only. Before use, the tubing shall be thoroughly rinsed with methanol, followed by repeated rinsing with reagent water to minimize sample contamination. An integrating flow meter is used to collect proportional composite samples.

6.2 Equipment for Glassware Cleaning—Laboratory sink with overhead fume hood.

6.3 Equipment for Sample Preparation

6.3.1 Laboratory fume hood of sufficient size to contain the sample preparation equipment listed below.

6.3.2 Glove box (optional).

6.3.3 Tissue homogenizer—VirTis Model 45 Macro homogenizer (American Scientific Products H–3515, or equivalent) with stainless steel Macro-shaft and Turbo-shear blade.

6.3.4 Meat grinder—Hobart, or equivalent, with 3–5 mm holes in inner plate.

6.3.5 Equipment for determining percent moisture

6.3.5.1 Oven—Capable of maintaining a temperature of 110 ±5 °C.

6.3.5.2 Dessicator.

6.3.6 Balances

6.3.6.1 Analytical—Capable of weighing 0.1 mg.

6.3.6.2 Top loading—Capable of weighing 10 mg.

6.4 Extraction Apparatus

6.4.1 Water samples

6.4.1.1 pH meter, with combination glass electrode.

6.4.1.2 pH paper, wide range (Hydrion Papers, or equivalent).

6.4.1.3 Graduated cylinder, 1 L capacity.

6.4.1.4 Liquid/liquid extraction—Separatory funnels, 250 mL, 500 mL, and 2000 mL, with fluoropolymer stopcocks.

6.4.1.5 Solid-phase extraction

6.4.1.5.1 One liter filtration apparatus, including glass funnel, glass frit support, clamp, adapter, stopper, filtration flask, and vacuum tubing (Figure 4). For wastewater samples, the apparatus should accept 90 or 144 mm disks. For drinking water or other samples containing low solids, smaller disks may be used.

6.4.1.5.2 Vacuum source capable of maintaining 25 in. Hg, equipped with shutoff valve and vacuum gauge.

6.4.1.5.3 Glass-fiber filter—Whatman GMF 150 (or equivalent), 1 micron pore size, to fit filtration apparatus in Section 6.4.1.5.1.

6.4.1.5.4 Solid-phase extraction disk containing octadecyl (C_{18}) bonded silica uniformly enmeshed in an inert matrix—Fisher Scientific 14–378F (or equivalent), to fit filtration apparatus in Section 6.4.1.5.1.

6.4.2 Soxhlet/Dean-Stark (SDS) extractor (Figure 5)—For filters and solid/sludge samples.

6.4.2.1 Soxhlet—50 mm ID, 200 mL capacity with 500 mL flask (Cal-Glass LG–6900, or equivalent, except substitute 500 mL round-bottom flask for 300 mL flat-bottom flask).

6.4.2.2 Thimble—43 × 123 to fit Soxhlet (Cal-Glass LG–6901–122, or equivalent).

6.4.2.3 Moisture trap—Dean Stark or Barret with fluoropolymer stopcock, to fit Soxhlet.

6.4.2.4 Heating mantle—Hemispherical, to fit 500 mL round-bottom flask (Cal-Glass LG–8801–112, or equivalent).

6.4.2.5 Variable transformer—Powerstat (or equivalent), 110 volt, 10 amp.

6.4.3 Apparatus for extraction of tissue.

6.4.3.1 Bottle for extraction (if digestion/extraction using HCl is used)'' 500–600 mL wide-mouth clear glass, with fluoropolymer-lined cap.

6.4.3.2 Bottle for back-extraction—100–200 mL narrow-mouth clear glass with fluoropolymer-lined cap.

6.4.3.3 Mechanical shaker—Wrist-action or platform-type rotary shaker that produces vigorous agitation (Sybron Thermolyne Model LE ''Big Bill'' rotator/shaker, or equivalent).

6.4.3.4 Rack attached to shaker table to permit agitation of four to nine samples simultaneously.

6.4.4 Beakers—400–500 mL.

6.4.5 Spatulas—Stainless steel.

6.5 Filtration Apparatus.

6.5.1 Pyrex glass wool—Solvent-extracted by SDS for three hours minimum.

NOTE: Baking glass wool may cause active sites that will irreversibly adsorb CDDs/CDFs.

6.5.2 Glass funnel—125–250 mL.

6.5.3 Glass-fiber filter paper—Whatman GF/D (or equivalent), to fit glass funnel in Section 6.5.2.

6.5.4 Drying column—15–20 mm ID Pyrex chromatographic column equipped with coarse-glass frit or glass-wool plug.

6.5.5 Buchner funnel—15 cm.

6.5.6 Glass-fiber filter paper—to fit Buchner funnel in Section 6.5.5.

6.5.7 Filtration flasks—1.5–2.0 L, with side arm.

6.5.8 Pressure filtration apparatus—Millipore YT30 142 HW, or equivalent.

6.6 Centrifuge Apparatus.

6.6.1 Centrifuge—Capable of rotating 500 mL centrifuge bottles or 15 mL centrifuge tubes at 5,000 rpm minimum.

6.6.2 Centrifuge bottles—500 mL, with screw-caps, to fit centrifuge.

6.6.3 Centrifuge tubes—12–15 mL, with screw-caps, to fit centrifuge.

6.7 Cleanup Apparatus.

6.7.1 Automated gel permeation chromatograph (Analytical Biochemical Labs, Inc, Columbia, MO, Model GPC Autoprep 1002, or equivalent).

6.7.1.1 Column—600–700 mm long × 25 mm ID, packed with 70 g of SX–3 Bio-beads (Bio-Rad Laboratories, Richmond, CA, or equivalent).

6.7.1.2 Syringe—10 mL, with Luer fitting.

6.7.1.3 Syringe filter holder—stainless steel, and glass-fiber or fluoropolymer filters (Gelman 4310, or equivalent).

6.7.1.4 UV detectors—254 nm, preparative or semi-preparative flow cell (Isco, Inc., Type 6; Schmadzu, 5 mm path length; Beckman-Altex 152W, 8 µL micro-prep flow cell, 2 mm path; Pharmacia UV–1, 3 mm flow cell; LDC Milton-Roy UV–3, monitor #1203; or equivalent).

6.7.2 Reverse-phase high-performance liquid chromatograph.

6.7.2.1 Column oven and detector—Perkin-Elmer Model LC–65T (or equivalent) operated at 0.02 AUFS at 235 nm.

6.7.2.2 Injector—Rheodyne 7120 (or equivalent) with 50 µL sample loop.

6.7.2.3 Column—Two 6.2 mm × 250 mm Zorbax-ODS columns in series (DuPont Instruments Division, Wilmington, DE, or equivalent), operated at 50 °C with 2.0 mL/min methanol isocratic effluent.

6.7.2.4 Pump—Altex 110A (or equivalent).

6.7.3 Pipets.

6.7.3.1 Disposable, pasteur—150 mm long × 5-mm ID (Fisher Scientific 13–678–6A, or equivalent).

6.7.3.2 Disposable, serological—10 mL (6 mm ID).

6.7.4 Glass chromatographic columns.

6.7.4.1 150 mm long × 8-mm ID, (Kontes K–420155, or equivalent) with coarse-glass frit or glass-wool plug and 250 mL reservoir.

6.7.4.2 200 mm long × 15 mm ID, with coarse-glass frit or glass-wool plug and 250 mL reservoir.

6.7.4.3 300 mm long × 25 mm ID, with 300 mL reservoir and glass or fluoropolymer stopcock.

6.7.5 Stirring apparatus for batch silica cleanup of tissue extracts.

6.7.5.1 Mechanical stirrer—Corning Model 320, or equivalent.

6.7.5.2 Bottle—500–600 mL wide-mouth clear glass.

6.7.6 Oven—For baking and storage of adsorbents, capable of maintaining a constant temperature (±5 °C) in the range of 105–250 °C.

6.8 Concentration Apparatus.

6.8.1 Rotary evaporator—Buchi/Brinkman-American Scientific No. E5045–10 or equivalent, equipped with a variable temperature water bath.

6.8.1.1 Vacuum source for rotary evaporator equipped with shutoff valve at the evaporator and vacuum gauge.

6.8.1.2 A recirculating water pump and chiller are recommended, as use of tap water for cooling the evaporator wastes large volumes of water and can lead to inconsistent performance as water temperatures and pressures vary.

6.8.1.3 Round-bottom flask—100 mL and 500 mL or larger, with ground-glass fitting compatible with the rotary evaporator.

6.8.2 Kuderna-Danish (K-D) Concentrator.

6.8.2.1 Concentrator tube—10 mL, graduated (Kontes K–570050–1025, or equivalent) with calibration verified. Ground-glass stopper (size 19/22 joint) is used to prevent evaporation of extracts.

6.8.2.2 Evaporation flask—500 mL (Kontes K–570001–0500, or equivalent), attached to concentrator tube with springs (Kontes K–662750–0012 or equivalent).

6.8.2.3 Snyder column—Three-ball macro (Kontes K–503000–0232, or equivalent).

6.8.2.4 Boiling chips.

6.8.2.4.1 Glass or silicon carbide—Approximately 10/40 mesh, extracted with methylene chloride and baked at 450 °C for one hour minimum.

6.8.2.4.2 Fluoropolymer (optional)—Extracted with methylene chloride.

6.8.2.5 Water bath—Heated, with concentric ring cover, capable of maintaining a temperature within ±2 °C, installed in a fume hood.

6.8.3 Nitrogen blowdown apparatus—Equipped with water bath controlled in the range of 30–60 °C (N-Evap, Organomation Associates, Inc., South Berlin, MA, or equivalent), installed in a fume hood.

6.8.4 Sample vials.

6.8.4.1 Amber glass—2–5 mL with fluoropolymer-lined screw-cap.

6.8.4.2 Glass—0.3 mL, conical, with fluoropolymer-lined screw or crimp cap.

6.9 Gas Chromatograph—Shall have splitless or on-column injection port for capillary column, temperature program with isothermal hold, and shall meet all of the performance specifications in Section 10.

6.9.1 GC column for CDDs/CDFs and for isomer specificity for 2,3,7,8-TCDD—60 ±5 m long × 0.32 ±0.02 mm ID; 0.25 µm 5% phenyl, 94% methyl, 1% vinyl silicone bonded-phase fused-silica capillary column (J&W DB–5, or equivalent).

6.9.2 GC column for isomer specificity for 2,3,7,8-TCDF—30 ±5 m long × 0.32 ±0.02 mm ID; 0.25 µm bonded-phase fused-silica capillary column (J&W DB–225, or equivalent).

6.10 Mass Spectrometer—28–40 eV electron impact ionization, shall be capable of repetitively selectively monitoring 12 exact m/z's minimum at high resolution (≥10,000) during a period of approximately one second, and shall meet all of the performance specifications in Section 10.

6.11 GC/MS Interface—The mass spectrometer (MS) shall be interfaced to the GC such that the end of the capillary column terminates within 1 cm of the ion source but does not intercept the electron or ion beams.

6.12 Data System—Capable of collecting, recording, and storing MS data.

7.0 Reagents and Standards

7.1 pH Adjustment and Back-Extraction.

7.1.1 Potassium hydroxide—Dissolve 20 g reagent grade KOH in 100 mL reagent water.

7.1.2 Sulfuric acid—Reagent grade (specific gravity 1.84).

7.1.3 Hydrochloric acid—Reagent grade, 6N.

7.1.4 Sodium chloride—Reagent grade, prepare at 5% (w/v) solution in reagent water.

7.2 Solution Drying and Evaporation.

7.2.1 Solution drying—Sodium sulfate, reagent grade, granular, anhydrous (Baker 3375, or equivalent), rinsed with methylene chloride (20 mL/g), baked at 400 °C for one hour minimum, cooled in a dessicator, and stored in a pre-cleaned glass bottle with screw-cap that prevents moisture from entering. If, after heating, the sodium sulfate develops a noticeable grayish cast (due to the presence of carbon in the crystal matrix), that batch of reagent is not suitable for use and should be discarded. Extraction with methylene chloride (as opposed to simple rinsing) and baking at a lower temperature may produce sodium sulfate that is suitable for use.

7.2.2 Tissue drying—Sodium sulfate, reagent grade, powdered, treated and stored as above.

7.2.3 Prepurified nitrogen.

7.3 Extraction.

7.3.1 Solvents—Acetone, toluene, cyclohexane, hexane, methanol, methylene chloride, and nonane; distilled in glass, pesticide quality, lot-certified to be free of interferences.

7.3.2 White quartz sand, 60/70 mesh—For Soxhlet/Dean-Stark extraction (Aldrich Chemical, Cat. No. 27–437–9, or equivalent). Bake at 450 °C for four hours minimum.

7.4 GPC Calibration Solution—Prepare a solution containing 300 mg/mL corn oil, 15 mg/mL bis(2-ethylhexyl) phthalate, 1.4 mg/mL pentachlorophenol, 0.1 mg/mL perylene, and 0.5 mg/mL sulfur.

7.5 Adsorbents for Sample Cleanup.

7.5.1 Silica gel.

7.5.1.1 Activated silica gel—100–200 mesh, Supelco 1–3651 (or equivalent), rinsed with methylene chloride, baked at 180 °C for a minimum of one hour, cooled in a dessicator, and stored in a precleaned glass bottle with screw-cap that prevents moisture from entering.

7.5.1.2 Acid silica gel (30% w/w)—Thoroughly mix 44.0 g of concentrated sulfuric acid with 100.0 g of activated silica gel in a clean container. Break up aggregates with a stirring rod until a uniform mixture is obtained. Store in a bottle with a fluoropolymer-lined screw-cap.

7.5.1.3 Basic silica gel—Thoroughly mix 30 g of 1N sodium hydroxide with 100 g of activated silica gel in a clean container. Break up aggregates with a stirring rod until a uniform mixture is obtained. Store in a bottle with a fluoropolymer-lined screw-cap.

7.5.1.4 Potassium silicate.

7.5.1.4.1 Dissolve 56 g of high purity potassium hydroxide (Aldrich, or equivalent) in 300 mL of methanol in a 750–1000 mL flat-bottom flask.

7.5.1.4.2 Add 100 g of silica gel and a stirring bar, and stir on a hot plate at 60–70 °C for one to two hours.

7.5.1.4.3 Decant the liquid and rinse the potassium silicate twice with 100 mL portions of methanol, followed by a single rinse with 100 mL of methylene chloride.

7.5.1.4.4 Spread the potassium silicate on solvent-rinsed aluminum foil and dry for two to four hours in a hood.

7.5.1.4.5 Activate overnight at 200–250 °C.

7.5.2 Alumina—Either one of two types of alumina, acid or basic, may be used in the cleanup of sample extracts, provided that the laboratory can meet the performance specifications for the recovery of labeled compounds described in Section 9.3. The same type of alumina must be used for all samples, including those used to demonstrate initial precision and recovery (Section 9.2) and ongoing precision and recovery (Section 15.5).

7.5.2.1 Acid alumina—Supelco 19996–6C (or equivalent). Activate by heating to 130 °C for a minimum of 12 hours.

7.5.2.2 Basic alumina—Supelco 19944–6C (or equivalent). Activate by heating to 600 °C for a minimum of 24 hours. Alternatively, activate by heating in a tube furnace at 650–700 °C under an air flow rate of approximately 400 cc/minute. Do not heat over 700 °C, as this can lead to reduced capacity for retaining the analytes. Store at 130 °C in a covered flask. Use within five days of baking.

7.5.3 Carbon.

7.5.3.1 Carbopak C—(Supelco 1–0258, or equivalent).

7.5.3.2 Celite 545—(Supelco 2–0199, or equivalent).

7.5.3.3 Thoroughly mix 9.0 g Carbopak C and 41.0 g Celite 545 to produce an 18% w/w mixture. Activate the mixture at 130 °C for a minimum of six hours. Store in a dessicator.

7.5.4 Anthropogenic isolation column—Pack the column in Section 6.7.4.3 from bottom to top with the following:

7.5.4.1 2 g silica gel (Section 7.5.1.1).

7.5.4.2 2 g potassium silicate (Section 7.5.1.4).

7.5.4.3 2 g granular anhydrous sodium sulfate (Section 7.2.1).

7.5.4.4 10 g acid silica gel (Section 7.5.1.2).

7.5.4.5 2 g granular anhydrous sodium sulfate.

7.5.5 Florisil column.

7.5.5.1 Florisil—60–100 mesh, Floridin Corp (or equivalent). Soxhlet extract in 500 g portions for 24 hours.

7.5.5.2 Insert a glass wool plug into the tapered end of a graduated serological pipet (Section 6.7.3.2). Pack with 1.5 g (approx 2 mL) of Florisil topped with approx 1 mL of sodium sulfate (Section 7.2.1) and a glass wool plug.

7.5.5.3 Activate in an oven at 130–150 °C for a minimum of 24 hours and cool for 30 minutes. Use within 90 minutes of cooling.

7.6 Reference Matrices—Matrices in which the CDDs/CDFs and interfering compounds are not detected by this method.

7.6.1 Reagent water—Bottled water purchased locally, or prepared by passage through activated carbon.

7.6.2 High-solids reference matrix—Playground sand or similar material. Prepared by extraction with methylene chloride and/or baking at 450 °C for a minimum of four hours.

7.6.3 Paper reference matrix—Glass-fiber filter, Gelman Type A, or equivalent. Cut paper to simulate the surface area of the paper sample being tested.

7.6.4 Tissue reference matrix—Corn or other vegetable oil. May be prepared by extraction with methylene chloride.

7.6.5 Other matrices—This method may be verified on any reference matrix by performing the tests given in Section 9.2. Ideally, the matrix should be free of the CDDs/CDFs, but in no case shall the background level of the CDDs/CDFs in the reference matrix exceed three times the minimum levels in Table 2. If low background levels of the CDDs/CDFs are present in the reference matrix, the spike level of the analytes used in Section 9.2 should be increased to provide a spike-to-background ratio in the range of 1:1 to 5:1 (Reference 15).

7.7 Standard Solutions—Purchased as solutions or mixtures with certification to their purity, concentration, and authenticity, or prepared from materials of known purity and composition. If the chemical purity is 98% or greater, the weight may be used without correction to compute the concentration of the standard. When not being used, standards are stored in the dark at room temperature in screw-capped vials with fluoropolymer-lined caps. A mark is placed on the vial at the level of the solution so that solvent loss by evaporation can be detected. If solvent loss has occurred, the solution should be replaced.

7.8 Stock Solutions.

7.8.1 Preparation—Prepare in nonane per the steps below or purchase as dilute solutions (Cambridge Isotope Laboratories (CIL), Woburn, MA, or equivalent). Observe the safety precautions in Section 5, and the recommendation in Section 5.1.2.

7.8.2 Dissolve an appropriate amount of assayed reference material in solvent. For example, weigh 1–2 mg of 2,3,7,8-TCDD to three significant figures in a 10 mL ground-glass-stoppered volumetric flask and fill to the mark with nonane. After the TCDD is completely dissolved, transfer the solution to a clean 15 mL vial with fluoropolymer-lined cap.

7.8.3 Stock standard solutions should be checked for signs of degradation prior to the preparation of calibration or performance test standards. Reference standards that can be used to determine the accuracy of calibration standards are available from CIL and may be available from other vendors.

7.9 PAR Stock Solution

7.9.1 All CDDs/CDFs—Using the solutions in Section 7.8, prepare the PAR stock solution to contain the CDDs/CDFs at the concentrations shown in Table 3. When diluted, the solution will become the PAR (Section 7.14).

7.9.2 If only 2,3,7,8-TCDD and 2,3,7,8-TCDF are to be determined, prepare the PAR stock solution to contain these compounds only.

7.10 Labeled-Compound Spiking Solution.

7.10.1 All CDDs/CDFs—From stock solutions, or from purchased mixtures, prepare this solution to contain the labeled compounds in nonane at the concentrations shown in Table 3. This solution is diluted with acetone prior to use (Section 7.10.3).

7.10.2 If only 2,3,7,8-TCDD and 2,3,7,8-TCDF are to be determined, prepare the labeled-compound solution to contain these compounds only. This solution is diluted with acetone prior to use (Section 7.10.3).

7.10.3 Dilute a sufficient volume of the labeled compound solution (Section 7.10.1 or 7.10.2) by a factor of 50 with acetone to prepare a diluted spiking solution. Each sample requires 1.0 mL of the diluted solution, but no more solution should be prepared than can be used in one day.

7.11 Cleanup Standard—Prepare $^{37}\mathrm{Cl}^{4}$-2,3,7,8-TCDD in nonane at the concentration shown in Table 3. The cleanup standard is added to all extracts prior to cleanup to measure the efficiency of the cleanup process.

7.12 Internal Standard(s).

7.12.1 All CDDs/CDFs—Prepare the internal standard solution to contain $^{13}\mathrm{C}^{12}$-1,2,3,4-TCDD and $^{13}\mathrm{C}^{2}$-1,2,3,7,8,9-HxCDD in nonane at the concentration shown in Table 3.

7.12.2 If only 2,3,7,8-TCDD and 2,3,7,8-TCDF are to be determined, prepare the internal standard solution to contain $^{13}\mathrm{C}^{12}$-1,2,3,4-TCDD only.

7.13 Calibration Standards (CS1 through CS5)—Combine the solutions in Sections 7.9 through 7.12 to produce the five calibration solutions shown in Table 4 in nonane. These solutions permit the relative response (labeled to native) and response factor to be measured as a function of concentration. The CS3 standard is used for calibration verification (VER). If only 2,3,7,8-TCDD and 2,3,7,8-TCDF are to be determined, combine the solutions appropriate to these compounds.

7.14 Precision and Recovery (PAR) Standard—Used for determination of initial (Section 9.2) and ongoing (Section 15.5) precision and recovery. Dilute 10 µL of the precision and recovery standard (Section 7.9.1 or 7.9.2) to 2.0 mL with acetone for each sample matrix for each sample batch. One mL each are required for the blank and OPR with each matrix in each batch.

7.15 GC Retention Time Window Defining Solution and Isomer Specificity Test Standard—Used to define the beginning and ending retention times for the dioxin and furan isomers and to demonstrate isomer specificity of the GC columns employed for determination of 2,3,7,8-TCDD and 2,3,7,8-TCDF. The standard must contain the compounds listed in Table 5 (CIL EDF—4006, or equivalent), at a minimum. It is not necessary to monitor the window-defining compounds if only 2,3,7,8-TCDD and 2,3,7,8-TCDF are to be determined. In this case, an isomer-specificity test standard containing the most closely eluted isomers listed in Table 5 (CIL EDF-4033, or equivalent) may be used.

7.16 QC Check Sample—A QC Check Sample should be obtained from a source independent of the calibration standards. Ideally, this check sample would be a certified reference material containing the CDDs/CDFs in known concentrations in a sample matrix similar to the matrix under test.

7.17 Stability of Solutions—Standard solutions used for quantitative purposes (Sections 7.9 through 7.15) should be analyzed periodically, and should be assayed against reference standards (Section 7.8.3) before further use.

8.0 Sample Collection, Preservation, Storage, and Holding Times

8.1 Collect samples in amber glass containers following conventional sampling practices (Reference 16). Aqueous samples that flow freely are collected in refrigerated bottles using automatic sampling equipment. Solid samples are collected as grab samples using wide-mouth jars.

8.2 Maintain aqueous samples in the dark at 0–4 °C from the time of collection until receipt at the laboratory. If residual chlorine is present in aqueous samples, add 80 mg sodium thiosulfate per liter of water. EPA

Methods 330.4 and 330.5 may be used to measure residual chlorine (Reference 17). If sample pH is greater than 9, adjust to pH 7–9 with sulfuric acid.

Maintain solid, semi-solid, oily, and mixed-phase samples in the dark at <4 °C from the time of collection until receipt at the laboratory.

Store aqueous samples in the dark at 0–4 °C. Store solid, semi-solid, oily, mixed-phase, and tissue samples in the dark at <-10 °C.

8.3 Fish and Tissue Samples.

8.3.1 Fish may be cleaned, filleted, or processed in other ways in the field, such that the laboratory may expect to receive whole fish, fish fillets, or other tissues for analysis.

8.3.2 Fish collected in the field should be wrapped in aluminum foil, and must be maintained at a temperature less than 4 °C from the time of collection until receipt at the laboratory.

8.3.3 Samples must be frozen upon receipt at the laboratory and maintained in the dark at <-10 °C until prepared. Maintain unused sample in the dark at <-10 °C.

8.4 Holding Times.

8.4.1 There are no demonstrated maximum holding times associated with CDDs/CDFs in aqueous, solid, semi-solid, tissues, or other sample matrices. If stored in the dark at 0–4 °C and preserved as given above (if required), aqueous samples may be stored for up to one year. Similarly, if stored in the dark at <-10 °C, solid, semi-solid, multi-phase, and tissue samples may be stored for up to one year.

8.4.2 Store sample extracts in the dark at <-10 °C until analyzed. If stored in the dark at <-10 °C, sample extracts may be stored for up to one year.

9.0 Quality Assurance/Quality Control

9.1 Each laboratory that uses this method is required to operate a formal quality assurance program (Reference 18). The minimum requirements of this program consist of an initial demonstration of laboratory capability, analysis of samples spiked with labeled compounds to evaluate and document data quality, and analysis of standards and blanks as tests of continued performance. Laboratory performance is compared to established performance criteria to determine if the results of analyses meet the performance characteristics of the method.

If the method is to be applied to sample matrix other than water (e.g., soils, filter cake, compost, tissue) the most appropriate alternate matrix (Sections 7.6.2 through 7.6.5) is substituted for the reagent water matrix (Section 7.6.1) in all performance tests.

9.1.1 The analyst shall make an initial demonstration of the ability to generate acceptable accuracy and precision with this method. This ability is established as described in Section 9.2.

9.1.2 In recognition of advances that are occurring in analytical technology, and to allow the analyst to overcome sample matrix interferences, the analyst is permitted certain options to improve separations or lower the costs of measurements. These options include alternate extraction, concentration, cleanup procedures, and changes in columns and detectors. Alternate determinative techniques, such as the substitution of spectroscopic or immuno-assay techniques, and changes that degrade method performance, are not allowed. If an analytical technique other than the techniques specified in this method is used, that technique must have a specificity equal to or better than the specificity of the techniques in this method for the analytes of interest.

9.1.2.1 Each time a modification is made to this method, the analyst is required to repeat the procedure in Section 9.2. If the detection limit of the method will be affected by the change, the laboratory is required to demonstrate that the MDL (40 CFR part 136, appendix B) is lower than one-third the regulatory compliance level or one-third the ML in this method, whichever is higher. If calibration will be affected by the change, the analyst must recalibrate the instrument per Section 10.

9.1.2.2 The laboratory is required to maintain records of modifications made to this method. These records include the following, at a minimum:

9.1.2.2.1 The names, titles, addresses, and telephone numbers of the analyst(s) who performed the analyses and modification, and of the quality control officer who witnessed and will verify the analyses and modifications.

9.1.2.2.2 A listing of pollutant(s) measured, by name and CAS Registry number.

9.1.2.2.3 A narrative stating reason(s) for the modifications.

9.1.2.2.4 Results from all quality control (QC) tests comparing the modified method to this method, including:

(a) Calibration (Section 10.5 through 10.7).

(b) Calibration verification (Section 15.3).

(c) Initial precision and recovery (Section 9.2).

(d) Labeled compound recovery (Section 9.3).

(e) Analysis of blanks (Section 9.5).

(f) Accuracy assessment (Section 9.4).

9.1.2.2.5 Data that will allow an independent reviewer to validate each determination by tracing the instrument output (peak height, area, or other signal) to the final result. These data are to include:

(a) Sample numbers and other identifiers.

(b) Extraction dates.

(c) Analysis dates and times.

(d) Analysis sequence/run chronology.

(e) Sample weight or volume (Section 11).

(f) Extract volume prior to each cleanup step (Section 13).

(g) Extract volume after each cleanup step (Section 13).

(h) Final extract volume prior to injection (Section 14).

(i) Injection volume (Section 14.3).

(j) Dilution data, differentiating between dilution of a sample or extract (Section 17.5).

(k) Instrument and operating conditions.

(l) Column (dimensions, liquid phase, solid support, film thickness, etc).

(m) Operating conditions (temperatures, temperature program, flow rates).

(n) Detector (type, operating conditions, etc).

(o) Chromatograms, printer tapes, and other recordings of raw data.

(p) Quantitation reports, data system outputs, and other data to link the raw data to the results reported.

9.1.3 Analyses of method blanks are required to demonstrate freedom from contamination (Section 4.3). The procedures and criteria for analysis of a method blank are described in Sections 9.5 and 15.6.

9.1.4 The laboratory shall spike all samples with labeled compounds to monitor method performance. This test is described in Section 9.3. When results of these spikes indicate atypical method performance for samples, the samples are diluted to bring method performance within acceptable limits. Procedures for dilution are given in Section 17.5.

9.1.5 The laboratory shall, on an ongoing basis, demonstrate through calibration verification and the analysis of the ongoing precision and recovery aliquot that the analytical system is in control. These procedures are described in Sections 15.1 through 15.5.

9.1.6 The laboratory shall maintain records to define the quality of data that is generated. Development of accuracy statements is described in Section 9.4.

9.2 Initial Precision and Recovery (IPR)—To establish the ability to generate acceptable precision and recovery, the analyst shall perform the following operations.

9.2.1 For low solids (aqueous) samples, extract, concentrate, and analyze four 1 L aliquots of reagent water spiked with the diluted labeled compound spiking solution (Section 7.10.3) and the precision and recovery standard (Section 7.14) according to the procedures in Sections 11 through 18. For an alternative sample matrix, four aliquots of the alternative reference matrix (Section 7.6) are used. All sample processing steps that are to be used for processing samples, including preparation (Section 11), extraction (Section 12), and cleanup (Section 13), shall be included in this test.

9.2.2 Using results of the set of four analyses, compute the average concentration (X) of the extracts in ng/mL and the standard deviation of the concentration (s) in ng/mL for each compound, by isotope dilution for CDDs/CDFs with a labeled analog, and by internal standard for 1,2,3,7,8,9-HxCDD, OCDF, and the labeled compounds.

9.2.3 For each CDD/CDF and labeled compound, compare s and X with the corresponding limits for initial precision and recovery in Table 6. If only 2,3,7,8-TCDD and 2,3,7,8-TCDF are to be determined, compare s and X with the corresponding limits for initial precision and recovery in Table 6a. If s and X for all compounds meet the acceptance criteria, system performance is acceptable and analysis of blanks and samples may begin. If, however, any individual s exceeds the precision limit or any individual X falls outside the range for accuracy, system performance is unacceptable for that compound. Correct the problem and repeat the test (Section 9.2).

9.3 The laboratory shall spike all samples with the diluted labeled compound spiking solution (Section 7.10.3) to assess method performance on the sample matrix.

9.3.1 Analyze each sample according to the procedures in Sections 11 through 18.

9.3.2 Compute the percent recovery of the labeled compounds and the cleanup standard using the internal standard method (Section 17.2).

9.3.3 The recovery of each labeled compound must be within the limits in Table 7 when all 2,3,7,8-substituted CDDs/CDFs are determined, and within the limits in Table 7a when only 2,3,7,8-TCDD and 2,3,7,8-TCDF are determined. If the recovery of any compound falls outside of these limits, method performance is unacceptable for that compound in that sample. To overcome such difficulties, water samples are diluted and smaller amounts of soils, sludges, sediments, and other matrices are reanalyzed per Section 18.4.

9.4 Recovery of labeled compounds from samples should be assessed and records should be maintained.

9.4.1 After the analysis of five samples of a given matrix type (water, soil, sludge, pulp, etc.) for which the labeled compounds pass the tests in Section 9.3, compute the average percent recovery (R) and the standard deviation of the percent recovery (SR) for the labeled compounds only. Express the assessment as a percent recovery interval from $R-2S_R$ to $R=2S_R$ for each matrix. For example, if $R = 90\%$ and $S_R = 10\%$ for five analyses of pulp, the recovery interval is expressed as 70–110%.

9.4.2 Update the accuracy assessment for each labeled compound in each matrix on a regular basis (e.g., after each 5–10 new measurements).

9.5 Method Blanks—Reference matrix method blanks are analyzed to demonstrate freedom from contamination (Section 4.3).

9.5.1 Prepare, extract, clean up, and concentrate a method blank with each sample batch (samples of the same matrix started through the extraction process on the same 12-hour shift, to a maximum of 20 samples). The matrix for the method blank shall be similar to sample matrix for the batch, e.g., a 1 L reagent water blank (Section 7.6.1), high-solids reference matrix blank (Section 7.6.2), paper matrix blank (Section 7.6.3); tissue blank (Section 7.6.4) or alternative reference matrix blank (Section 7.6.5). Analyze the blank immediately after analysis of the OPR (Section 15.5) to demonstrate freedom from contamination.

9.5.2 If any 2,3,7,8-substituted CDD/CDF (Table 1) is found in the blank at greater than the minimum level (Table 2) or one-third the regulatory compliance level, whichever is greater; or if any potentially interfering compound is found in the blank at the minimum level for each level of chlorination given in Table 2 (assuming a response factor of 1 relative to the $^{13}C_{12}$-1,2,3,4-TCDD internal standard for compounds not listed in Table 1), analysis of samples is halted until the blank associated with the sample batch shows no evidence of contamination at this level. All samples must be associated with an uncontaminated method blank before the results for those samples may be reported for regulatory compliance purposes.

9.6 QC Check Sample—Analyze the QC Check Sample (Section 7.16) periodically to assure the accuracy of calibration standards and the overall reliability of the analytical process. It is suggested that the QC Check Sample be analyzed at least quarterly.

9.7 The specifications contained in this method can be met if the apparatus used is calibrated properly and then maintained in a calibrated state. The standards used for calibration (Section 10), calibration verification (Section 15.3), and for initial (Section 9.2) and ongoing (Section 15.5) precision and recovery should be identical, so that the most precise results will be obtained. A GC/MS instrument will provide the most reproducible results if dedicated to the settings and conditions required for the analyses of CDDs/CDFs by this method.

9.8 Depending on specific program requirements, field replicates may be collected to determine the precision of the sampling technique, and spiked samples may be required to determine the accuracy of the analysis when the internal standard method is used.

10.0 Calibration

10.1 Establish the operating conditions necessary to meet the minimum retention times for the internal standards in Section 10.2.4 and the relative retention times for the CDDs/CDFs in Table 2.

10.1.1 Suggested GC operating conditions:

Injector temperature: 270 °C
Interface temperature: 290 °C
Initial temperature: 200 °C
Initial time: Two minutes
Temperature program:
200–220 °C, at 5 °C/minute
220 °C for 16 minutes
220–235 °C, at 5 °C/minute
235 °C for seven minutes
235–330 °C, at 5 °C/minute

NOTE: All portions of the column that connect the GC to the ion source shall remain at or above the interface temperature specified above during analysis to preclude condensation of less volatile compounds.

Optimize GC conditions for compound separation and sensitivity. Once optimized, the same GC conditions must be used for the analysis of all standards, blanks, IPR and OPR aliquots, and samples.

10.1.2 Mass spectrometer (MS) resolution—Obtain a selected ion current profile (SICP) of each analyte in Table 3 at the two exact m/z's specified in Table 8 and at ≥10,000 resolving power by injecting an authentic standard of the CDDs/CDFs either singly or as part of a mixture in which there is no interference between closely eluted components.

10.1.2.1 The analysis time for CDDs/CDFs may exceed the long-term mass stability of the mass spectrometer. Because the instrument is operated in the high-resolution mode, mass drifts of a few ppm (e.g., 5 ppm in mass) can have serious adverse effects on instrument performance. Therefore, a mass-drift correction is mandatory and a lock-mass m/z from PFK is used for drift correction. The lock-mass m/z is dependent on the exact m/z's monitored within each descriptor, as shown in Table 8. The level of PFK metered into the HRMS during analyses should be adjusted so that the amplitude of the most intense selected lock-mass m/z signal (regardless of the descriptor number) does not exceed 10% of the full-scale deflection for a given set of detector parameters. Under those conditions, sensitivity changes that might occur during the analysis can be more effectively monitored.

NOTE: Excessive PFK (or any other reference substance) may cause noise problems and contamination of the ion source necessitating increased frequency of source cleaning.

10.1.2.2 If the HRMS has the capability to monitor resolution during the analysis, it is acceptable to terminate the analysis when the resolution falls below 10,000 to save reanalysis time.

10.1.2.3 Using a PFK molecular leak, tune the instrument to meet the minimum required resolving power of 10,000 (10% valley) at m/z 304.9824 (PFK) or any other reference signal close to m/z 304 (from TCDF). For each descriptor (Table 8), monitor and record the resolution and exact m/z's of three to five reference peaks covering the mass range of the descriptor. The resolution must be greater than or equal to 10,000, and the deviation between the exact m/z and the theoretical m/z (Table 8) for each exact m/z monitored must be less than 5 ppm.

10.2 Ion Abundance Ratios, Minimum Levels, Signal-to-Noise Ratios, and Absolute Retention Times—Choose an injection volume of either 1 µL or 2 µL, consistent with the capability of the HRGC/HRMS instrument. Inject a 1 µL or 2 µL aliquot of the CS1 calibration solution (Table 4) using the GC conditions from Section 10.1.1. If only 2,3,7,8-TCDD and 2,3,7,8-TCDF are to be determined, the operating conditions and specifications below apply to analysis of those compounds only.

10.2.1 Measure the SICP areas for each analyte, and compute the ion abundance ratios at the exact m/z's specified in Table 8. Compare the computed ratio to the theoretical ratio given in Table 9.

10.2.1.1 The exact m/z's to be monitored in each descriptor are shown in Table 8. Each group or descriptor shall be monitored in succession as a function of GC retention time to ensure that all CDDs/CDFs are detected. Additional m/z's may be monitored in each descriptor, and the m/z's may be divided among more than the five descriptors listed in Table 8, provided that the laboratory is able to monitor the m/z's of all the CDDs/CDFs that may elute from the GC in a given retention-time window. If only 2,3,7,8-TCDD and 2,3,7,8-TCDF are to be determined, the descriptors may be modified to include only the exact m/z's for the tetra-and penta-isomers, the diphenyl ethers, and the lock m/z's.

10.2.1.2 The mass spectrometer shall be operated in a mass-drift correction mode, using perfluorokerosene (PFK) to provide lock m/z's. The lock-mass for each group of m/z's is shown in Table 8. Each lock mass shall be monitored and shall not vary by more than ±20% throughout its respective retention time window. Variations of the lock mass by more than 20% indicate the presence of coeluting interferences that may significantly reduce the sensitivity of the mass spectrometer. Reinjection of another aliquot of the sample extract will not resolve the problem. Additional cleanup of the extract may be required to remove the interferences.

10.2.2 All CDDs/CDFs and labeled compounds in the CS1 standard shall be within the QC limits in Table 9 for their respective ion abundance ratios; otherwise, the mass spectrometer shall be adjusted and this test repeated until the m/z ratios fall within the limits specified. If the adjustment alters the resolution of the mass spectrometer, resolution shall be verified (Section 10.1.2) prior to repeat of the test.

10.2.3 Verify that the HRGC/HRMS instrument meets the minimum levels in Table 2. The peaks representing the CDDs/CDFs and labeled compounds in the CS1 calibration standard must have signal-to-noise ratios (S/N) greater than or equal to 10.0. Otherwise, the mass spectrometer shall be adjusted and this test repeated until the minimum levels in Table 2 are met.

10.2.4 The absolute retention time of $^{13}C_{12}$-1,2,3,4–TCDD (Section 7.12) shall exceed 25.0 minutes on the DB–5 column, and the retention time of $^{13}C_{12}$-1,2,3,4–TCDD shall exceed 15.0 minutes on the DB–225 column; otherwise, the GC temperature program shall be adjusted and this test repeated until the above-stated minimum retention time criteria are met.

2010.3 Retention-Time Windows—Analyze the window defining mixtures (Section 7.15) using the optimized temperature program in Section 10.1. Table 5 gives the elution order (first/last) of the window-defining compounds. If 2,3,7,8-TCDD and 2,3,7,8-TCDF only are to be analyzed, this test is not required.

10.4 Isomer Specificity.

10.4.1 Analyze the isomer specificity test standards (Section 7.15) using the procedure in Section 14 and the optimized conditions for sample analysis (Section 10.1.1).

10.4.2 Compute the percent valley between the GC peaks that elute most closely to the 2,3,7,8-TCDD and TCDF isomers, on their respective columns, per Figures 6 and 7.

10.4.3 Verify that the height of the valley between the most closely eluted isomers and the 2,3,7,8-substituted isomers is less than 25% (computed as 100 x/y in Figures 6 and 7). If the valley exceeds 25%, adjust the analytical conditions and repeat the test or replace the GC column and recalibrate (Sections 10.1.2 through 10.7).

10.5 Calibration by Isotope Dilution—Isotope dilution calibration is used for the 15 2,3,7,8-substituted CDDs/CDFs for which labeled compounds are added to samples prior to extraction. The reference compound for each CDD/CDF compound is shown in Table 2.

10.5.1 A calibration curve encompassing the concentration range is prepared for each compound to be determined. The relative response (RR) (labeled to native) vs. concentration in standard solutions is plotted or computed using a linear regression. Relative response is determined according to the procedures described below. Five calibration points are employed.

10.5.2 The response of each CDD/CDF relative to its labeled analog is determined using the area responses of both the primary and secondary exact m/z's specified in Table 8, for each calibration standard, as follows:

$$RR = \frac{\left(A1_n + A2_n\right) C_l}{\left(A1_l + A2_l\right) C_n}$$

where:

$A1_n$ and $A2_n$ = The areas of the primary and secondary m/z's for the CDD/CDF.

$A1_l$ and $A2_l$ = The areas of the primary and secondary m/z's for the labeled compound.

C_l = The concentration of the labeled compound in the calibration standard (Table 4).

C_n = The concentration of the native compound in the calibration standard (Table 4).

10.5.3 To calibrate the analytical system by isotope dilution, inject a volume of calibration standards CS1 through CS5 (Section 7.13 and Table 4) identical to the volume chosen in Section 10.2, using the procedure in Section 14 and the conditions in Section 10.1.1 and Table 2. Compute the relative response (RR) at each concentration.

10.5.4 Linearity—If the relative response for any compound is constant (less than 20% coefficient of variation) over the five-point calibration range, an averaged relative response may be used for that compound; otherwise, the complete calibration curve for that compound shall be used over the five-point calibration range.

10.6 Calibration by Internal Standard—The internal standard method is applied to determination of 1,2,3,7,8,9-HxCDD (Section 17.1.2), OCDF (Section 17.1.1), the non 2,3,7,8-substituted compounds, and to the determination of labeled compounds for intralaboratory statistics (Sections 9.4 and 15.5.4).

10.6.1 Response factors—Calibration requires the determination of response factors (RF) defined by the following equation:

$$RF = \frac{\left(A1_s + A2_s\right) C_{is}}{\left(A1_{is} + A2_{is}\right) C_s}$$

where:

$A1_s$ and $A2_s$ = The areas of the primary and secondary m/z's for the CDD/CDF.

$A1_{is}$ and $A2_{is}$ = The areas of the primary and secondary m/z's for the internal standard.

C_{is} = The concentration of the internal standard (Table 4).

C_s = The concentration of the compound in the calibration standard (Table 4).

NOTE: There is only one m/z for $^{37}Cl_4$-2,3,7,8-TCDD. See Table 8.

10.6.2 To calibrate the analytical system by internal standard, inject 1.0 µL or 2.0 µL of calibration standards CS1 through CS5 (Section 7.13 and Table 4) using the procedure in Section 14 and the conditions in Section 10.1.1 and Table 2. Compute the response factor (RF) at each concentration.

10.6.3 Linearity—If the response factor (RF) for any compound is constant (less than 35% coefficient of variation) over the five-point calibration range, an averaged response factor may be used for that compound; otherwise, the complete calibration curve for that compound shall be used over the five-point range.

10.7 Combined Calibration—By using calibration solutions (Section 7.13 and Table 4) containing the CDDs/CDFs and labeled compounds and the internal standards, a single set of analyses can be used to produce calibration curves for the isotope dilution and internal standard methods. These curves are verified each shift (Section 15.3) by analyzing the calibration verification standard (VER, Table 4). Recalibration is required if any of the calibration verification criteria (Section 15.3) cannot be met.

10.8 Data Storage—MS data shall be collected, recorded, and stored.

10.8.1 Data acquisition—The signal at each exact m/z shall be collected repetitively throughout the monitoring period and stored on a mass storage device.

10.8.2 Response factors and multipoint calibrations—The data system shall be used to record and maintain lists of response factors (response ratios for isotope dilution) and multipoint calibration curves. Computations of relative standard deviation (coefficient of variation) shall be used to test calibration linearity. Statistics on initial performance (Section 9.2) and ongoing performance (Section 15.5) should be computed and maintained, either on the instrument data system, or on a separate computer system.

11.0 Sample Preparation

11.1 Sample preparation involves modifying the physical form of the sample so that the CDDs/CDFs can be extracted efficiently. In general, the samples must be in a liquid form or in the form of finely divided solids in order for efficient extraction to take place. Table 10 lists the phases and suggested quantities for extraction of various sample matrices.

For samples known or expected to contain high levels of the CDDs/CDFs, the smallest sample size representative of the entire sample should be used (see Section 17.5).

For all samples, the blank and IPR/OPR aliquots must be processed through the same steps as the sample to check for contamination and losses in the preparation processes.

11.1.1 For samples that contain particles, percent solids and particle size are determined using the procedures in Sections 11.2 and 11.3, respectively.

11.1.2 Aqueous samples—Because CDDs/CDFs may be bound to suspended particles, the preparation of aqueous samples is dependent on the solids content of the sample.

11.1.2.1 Aqueous samples visibly absent particles are prepared per Section 11.4 and extracted directly using the separatory funnel or SPE techniques in Sections 12.1 or 12.2, respectively.

11.1.2.2 Aqueous samples containing visible particles and containing one percent suspended solids or less are prepared using the procedure in Section 11.4. After preparation, the sample is extracted directly using the SPE technique in 12.2 or filtered per Section 11.4.3. After filtration, the particles and filter are extracted using the SDS procedure in Section 12.3 and the filtrate is extracted using the separatory funnel procedure in Section 12.1.

11.1.2.3 For aqueous samples containing greater than one percent solids, a sample aliquot sufficient to provide 10 g of dry solids is used, as described in Section 11.5.

11.1.3 Solid samples are prepared using the procedure described in Section 11.5 followed by extraction via the SDS procedure in Section 12.3.

11.1.4 Multiphase samples—The phase(s) containing the CDDs/CDFs is separated from the non-CDD/CDF phase using pressure filtration and centrifugation, as described in Section 11.6. The CDDs/CDFs will be in the organic phase in a multiphase sample in which an organic phase exists.

11.1.5 Procedures for grinding, homogenization, and blending of various sample phases are given in Section 11.7.

11.1.6 Tissue samples—Preparation procedures for fish and other tissues are given in Section 11.8.

11.2 Determination of Percent Suspended Solids.

NOTE: This aliquot is used for determining the solids content of the sample, not for determination of CDDs/CDFs.

11.2.1 Aqueous liquids and multi-phase samples consisting of mainly an aqueous phase.

11.2.1.1 Dessicate and weigh a GF/D filter (Section 6.5.3) to three significant figures.

11.2.1.2 Filter 10.0 ±0.02 mL of well-mixed sample through the filter.

11.2.1.3 Dry the filter a minimum of 12 hours at 110 ±5 °C and cool in a dessicator.

11.2.1.4 Calculate percent solids as follows:

$$\% \text{ solids} = \frac{\text{weight of sample aliquot after drying (g)} - \text{weight of filter (g)}}{10 \text{ g}} \times 100$$

11.2.2 Non-aqueous liquids, solids, semi-solid samples, and multi-phase samples in which the main phase is not aqueous; but not tissues.

11.2.2.1 Weigh 5–10 g of sample to three significant figures in a tared beaker.

11.2.2.2 Dry a minimum of 12 hours at 110 ±5 °C, and cool in a dessicator.

11.2.2.3 Calculate percent solids as follows:

$$\% \text{ solids} = \frac{\text{weight of sample aliquot after drying}}{\text{weight of sample aliquot before drying}} \times 100$$

11.3 Determination of Particle Size.

11.3.1 Spread the dried sample from Section 11.2.2.2 on a piece of filter paper or aluminum foil in a fume hood or glove box.

11.3.2 Estimate the size of the particles in the sample. If the size of the largest particles is greater than 1 mm, the particle size must be reduced to 1 mm or less prior to extraction using the procedures in Section 11.7.

11.4 Preparation of Aqueous Samples Containing 1% Suspended Solids or Less.

11.4.1 Aqueous samples visibly absent particles are prepared per the procedure below and extracted directly using the separatory funnel or SPE techniques in Sections 12.1 or 12.2, respectively. Aqueous samples containing visible particles and one percent suspended solids or less are prepared using the procedure below and extracted using either the SPE technique in Section 12.2 or further prepared using the filtration procedure in Section 11.4.3. The filtration procedure is followed by SDS extraction of the filter and particles (Section 12.3) and separatory funnel extraction of the filtrate (Section 12.1). The SPE procedure is followed by SDS extraction of the filter and disk.

11.4.2 Preparation of sample and QC aliquots.

11.4.2.1 Mark the original level of the sample on the sample bottle for reference. Weigh the sample plus bottle to ±1.

11.4.2.2 Spike 1.0 mL of the diluted labeled-compound spiking solution (Section 7.10.3) into the sample bottle. Cap the bottle and mix the sample by careful shaking. Allow the sample to equilibrate for one to two hours, with occasional shaking.

11.4.2.3 For each sample or sample batch (to a maximum of 20 samples) to be extracted during the same 12-hour shift, place two 1.0 L aliquots of reagent water in clean sample bottles or flasks.

11.4.2.4 Spike 1.0 mL of the diluted labeled-compound spiking solution (Section 7.10.3) into both reagent water aliquots. One of these aliquots will serve as the method blank.

11.4.2.5 Spike 1.0 mL of the PAR standard (Section 7.14) into the remaining reagent water aliquot. This aliquot will serve as the OPR (Section 15.5).

11.4.2.6 If SPE is to be used, add 5 mL of methanol to the sample, cap and shake the sample to mix thoroughly, and proceed to Section 12.2 for extraction. If SPE is not to be used, and the sample is visibly absent particles, proceed to Section 12.1 for extraction. If SPE is not to be used and the sample contains visible particles, proceed to the following section for filtration of particles.

11.4.3 Filtration of particles.

11.4.3.1 Assemble a Buchner funnel (Section 6.5.5) on top of a clean filtration flask. Apply vacuum to the flask, and pour the entire contents of the sample bottle through a glass-fiber filter (Section 6.5.6) in the Buchner funnel, swirling the sample remaining in the bottle to suspend any particles.

11.4.3.2 Rinse the sample bottle twice with approximately 5 mL portions of reagent water to transfer any remaining particles onto the filter.

11.4.3.3 Rinse any particles off the sides of the Buchner funnel with small quantities of reagent water.

11.4.3.4 Weigh the empty sample bottle to ±1 g. Determine the weight of the sample by difference. Save the bottle for further use.

11.4.3.5 Extract the filtrate using the separatory funnel procedure in Section 12.1.

11.4.3.6 Extract the filter containing the particles using the SDS procedure in Section 12.3.

11.5 Preparation of Samples Containing Greater Than 1% Solids.

11.5.1 Weigh a well-mixed aliquot of each sample (of the same matrix type) sufficient to provide 10 g of dry solids (based on the solids determination in Section 11.2) into a clean beaker or glass jar.

11.5.2 Spike 1.0 mL of the diluted labeled compound spiking solution (Section 7.10.3) into the sample.

11.5.3 For each sample or sample batch (to a maximum of 20 samples) to be extracted during the same 12-hour shift, weigh two 10 g aliquots of the appropriate reference matrix (Section 7.6) into clean beakers or glass jars.

11.5.4 Spike 1.0 mL of the diluted labeled compound spiking solution (Section 7.10.3) into each reference matrix aliquot. One aliquot will serve as the method blank. Spike 1.0 mL of the PAR standard (Section 7.14) into the other reference matrix aliquot. This aliquot will serve as the OPR (Section 15.5).

11.5.5 Stir or tumble and equilibrate the aliquots for one to two hours.

11.5.6 Decant excess water. If necessary to remove water, filter the sample through a glass-fiber filter and discard the aqueous liquid.

11.5.7 If particles >1mm are present in the sample (as determined in Section 11.3.2), spread the sample on clean aluminum foil in a hood. After the sample is dry, grind to reduce the particle size (Section 11.7).

11.5.8 Extract the sample and QC aliquots using the SDS procedure in Section 12.3.

11.6 Multiphase Samples.

11.6.1 Using the percent solids determined in Section 11.2.1 or 11.2.2, determine the volume of sample that will provide 10 g of solids, up to 1 L of sample.

11.6.2 Pressure filter the amount of sample determined in Section 11.6.1 through Whatman GF/D glass-fiber filter paper (Section 6.5.3). Pressure filter the blank and OPR aliquots through GF/D papers also. If necessary to separate the phases and/or settle the solids, centrifuge these aliquots prior to filtration.

11.6.3 Discard any aqueous phase (if present). Remove any non-aqueous liquid present and reserve the maximum amount filtered from the sample (Section 11.6.1) or 10 g, whichever is less, for combination with the solid phase (Section 12.3.5).

11.6.4 If particles >1mm are present in the sample (as determined in Section 11.3.2) and the sample is capable of being dried, spread the sample and QC aliquots on clean aluminum foil in a hood. After the aliquots are dry or if the sample cannot be dried, reduce the particle size using the procedures in Section 11.7 and extract the reduced particles using the SDS procedure in Section 12.3. If particles >1mm are not present, extract the particles and filter in the sample and QC aliquots directly using the SDS procedure in Section 12.3.

11.7 Sample grinding, homogenization, or blending—Samples with particle sizes greater than 1 mm (as determined in Section 11.3.2) are subjected to grinding, homogenization, or blending. The method of reducing particle size to less than 1 mm is matrix-dependent. In general, hard particles can be reduced by grinding with a mortar and pestle. Softer particles can be reduced by grinding in a Wiley mill or meat grinder, by homogenization, or in a blender.

11.7.1 Each size-reducing preparation procedure on each matrix shall be verified by running the tests in Section 9.2 before the procedure is employed routinely.

11.7.2 The grinding, homogenization, or blending procedures shall be carried out in a glove box or fume hood to prevent particles from contaminating the work environment.

11.7.3 Grinding—Certain papers and pulps, slurries, and amorphous solids can be ground in a Wiley mill or heavy duty meat grinder. In some cases, reducing the temperature of the sample to freezing or to dry ice or liquid nitrogen temperatures can aid in the grinding process. Grind the sample aliquots from Section 11.5.7 or 11.6.4 in a clean grinder. Do not allow the sample temperature to exceed 50 °C. Grind the blank and reference matrix aliquots using a clean grinder.

11.7.4 Homogenization or blending—Particles that are not ground effectively, or particles greater than 1 mm in size after grinding, can often be reduced in size by high speed homogenization or blending. Homogenize and/or blend the particles or filter from Section 11.5.7 or 11.6.4 for the sample, blank, and OPR aliquots.

11.7.5 Extract the aliquots using the SDS procedure in Section 12.3.

11.8 Fish and Other Tissues—Prior to processing tissue samples, the laboratory must determine the exact tissue to be analyzed. Common requests for analysis of fish tissue include whole fish—skin on, whole fish—skin removed, edible fish fillets (filleted in the field or by the laboratory), specific organs, and other portions. Once the appropriate tissue has been determined, the sample must be homogenized.

11.8.1 Homogenization.

11.8.1.1 Samples are homogenized while still frozen, where practical. If the laboratory must dissect the whole fish to obtain the appropriate tissue for analysis, the unused tissues may be rapidly refrozen and stored in a clean glass jar for subsequent use.

11.8.1.2 Each analysis requires 10 g of tissue (wet weight). Therefore, the laboratory should homogenize at least 20 g of tissue to allow for re-extraction of a second aliquot of the same homogenized sample, if re-analysis is required. When whole fish analysis is necessary, the entire fish is homogenized.

11.8.1.3 Homogenize the sample in a tissue homogenizer (Section 6.3.3) or grind in a meat grinder (Section 6.3.4). Cut tissue too large to feed into the grinder into smaller pieces. To assure homogeneity, grind three times.

11.8.1.4 Transfer approximately 10 g (wet weight) of homogenized tissue to a clean, tared, 400–500 mL beaker. For the alternate HCl digestion/extraction, transfer the tissue to a clean, tared 500–600 mL wide-mouth bottle. Record the weight to the nearest 10 mg.

11.8.1.5 Transfer the remaining homogenized tissue to a clean jar with a fluoropolymer-lined lid. Seal the jar and store the tissue at <-10 °C. Return any tissue that was not homogenized to its original container and store at <-10 °C.

11.8.2 QC aliquots.

11.8.2.1 Prepare a method blank by adding approximately 10 g of the oily liquid reference matrix (Section 7.6.4) to a 400–500 mL beaker. For the alternate HCl digestion/extraction, add the reference matrix to a 500–600 mL wide-mouth bottle. Record the weight to the nearest 10 mg.

11.8.2.2 Prepare a precision and recovery aliquot by adding approximately 10 g of the oily liquid reference matrix (Section 7.6.4) to a separate 400–500 mL beaker or wide-mouth bottle, depending on the extraction procedure to be used. Record the weight to the nearest 10 mg. If the initial precision and recovery test is to be performed, use four aliquots; if the ongoing precision and recovery test is to be performed, use a single aliquot.

11.8.3 Spiking

11.8.3.1 Spike 1.0 mL of the labeled compound spiking solution (Section 7.10.3) into the sample, blank, and OPR aliquot.

11.8.3.2 Spike 1.0 mL of the PAR standard (Section 7.14) into the OPR aliquot.

11.8.4 Extract the aliquots using the procedures in Section 12.4.

12.0 Extraction and Concentration

Extraction procedures include separatory funnel (Section 12.1) and solid phase (Section 12.2) for aqueous liquids; Soxhlet/Dean-Stark (Section 12.3) for solids, filters, and SPE disks; and Soxhlet extraction (Section 12.4.1) and HCl digestion (Section 12.4.2) for tissues. Acid/base back-extraction (Section 12.5) is used for initial cleanup of extracts.

Macro-concentration procedures include rotary evaporation (Section 12.6.1), heating mantle (Section 12.6.2), and Kuderna-Danish (K-D) evaporation (Section 12.6.3). Micro-concentration uses nitrogen blowdown (Section 12.7).

12.1 Separatory funnel extraction of filtrates and of aqueous samples visibly absent particles.

12.1.1 Pour the spiked sample (Section 11.4.2.2) or filtrate (Section 11.4.3.5) into a 2 L separatory funnel. Rinse the bottle or flask twice with 5 mL of reagent water and add these rinses to the separatory funnel.

12.1.2 Add 60 mL methylene chloride to the empty sample bottle (Section 12.1.1), seal, and shake 60 seconds to rinse the inner surface. Transfer the solvent to the separatory funnel, and extract the sample by shaking the funnel for two minutes with periodic venting. Allow the organic layer to separate from the aqueous phase for a minimum of 10 minutes. If an emulsion forms and is more than one-third the volume of the solvent layer, employ mechanical techniques to complete the phase separation (see note below). Drain the methylene chloride extract through a solvent-rinsed glass funnel approximately one-half full of granular anhydrous sodium sulfate (Section 7.2.1) supported on clean glass-fiber paper into a solvent-rinsed concentration device (Section 12.6).

NOTE: If an emulsion forms, the analyst must employ mechanical techniques to complete the phase separation. The optimum technique depends upon the sample, but may include stirring, filtration through glass wool, use of phase separation paper, centrifugation, use of an ultrasonic bath with ice, addition of NaCl, or other physical methods. Alternatively, solid-phase or other extraction techniques may be used to prevent emulsion formation. Any alternative technique is acceptable so long as the requirements in Section 9 are met.

Experience with aqueous samples high in dissolved organic materials (e.g., paper mill effluents) has shown that acidification of the sample prior to extraction may reduce the formation of emulsions. Paper industry methods suggest that the addition of up to 400 mL of ethanol to a 1 L effluent sample may also reduce emulsion formation. However, studies by EPA suggest that the effect may be a result of sample dilution, and that the addition of reagent water may serve the same function. Mechanical techniques may still be necessary to complete the phase separation. If either acidification or addition of ethanol is utilized, the laboratory must perform the startup tests described in Section 9.2 using the same techniques.

12.1.3 Extract the water sample two more times with 60 mL portions of methylene chloride. Drain each portion through the sodium sulfate into the concentrator. After the third extraction, rinse the separatory funnel with at least 20 mL of methylene chloride, and drain this rinse through the sodium sulfate into the concentrator. Repeat this rinse at least twice. Set aside the funnel with sodium sulfate if the extract is to be combined with the extract from the particles.

12.1.4 Concentrate the extract using one of the macro-concentration procedures in Section 12.6.

12.1.4.1 If the extract is from a sample visibly absent particles (Section 11.1.2.1), adjust the final volume of the concentrated extract to approximately 10 mL with hexane, transfer to a 250 mL separatory funnel, and back-extract using the procedure in Section 12.5.

12.1.4.2 If the extract is from the aqueous filtrate (Section 11.4.3.5), set aside the concentration apparatus for addition of the SDS extract from the particles (Section 12.3.9.1.2).

12.2 SPE of Samples Containing Less Than 1% Solids (References 19–20).

12.2.1 Disk preparation.

12.2.1.1 Place an SPE disk on the base of the filter holder (Figure 4) and wet with toluene. While holding a GMF 150 filter above the SPE disk with tweezers, wet the filter with toluene and lay the filter on the SPE disk, making sure that air is not trapped between the filter and disk. Clamp the filter and SPE disk between the 1 L glass reservoir and the vacuum filtration flask.

12.2.1.2 Rinse the sides of the filtration flask with approx 15 mL of toluene using a squeeze bottle or syringe. Apply vacuum momentarily until a few drops appear at the drip tip. Release the vacuum and allow the filter/disk to soak for approx one minute. Apply vacuum and draw all of the toluene through the filter/disk. Repeat the wash step with approx 15 mL of acetone and allow the filter/disk to air dry.

12.2.1.3 Re-wet the filter/disk with approximately 15 mL of methanol, allowing the filter/disk to soak for approximately one minute. Pull the methanol through the filter/disk using the vacuum, but retain a layer of methanol approximately 1 mm thick on the filter. Do not allow the disk to go dry from this point until the end of the extraction.

12.2.1.4 Rinse the filter/disk with two 50-mL portions of reagent water by adding the water to the reservoir and pulling most through, leaving a layer of water on the surface of the filter.

12.2.2 Extraction.

12.2.2.1 Pour the spiked sample (Section 11.4.2.2), blank (Section 11.4.2.4), or IPR/OPR aliquot (Section 11.4.2.5) into the reservoir and turn on the vacuum to begin the extraction. Adjust the vacuum to complete the extraction in no less than 10 minutes. For samples containing a high concentration of particles (suspended solids), filtration times may be eight hours or longer.

12.2.2.2 Before all of the sample has been pulled through the filter/disk, rinse the sample bottle with approximately 50 mL of reagent water to remove any solids, and pour into the reservoir. Pull through the filter/disk. Use additional reagent water rinses until all visible solids are removed.

12.2.2.3 Before all of the sample and rinses have been pulled through the filter/disk, rinse the sides of the reservoir with small portions of reagent water.

12.2.2.4 Allow the filter/disk to dry, then remove the filter and disk and place in a glass Petri dish. Extract the filter and disk per Section 12.3.

12.3 SDS Extraction of Samples Containing Particles, and of Filters and/or Disks.

12.3.1 Charge a clean extraction thimble (Section 6.4.2.2) with 5.0 g of 100/200 mesh silica (Section 7.5.1.1) topped with 100 g of quartz sand (Section 7.3.2).

NOTE: Do not disturb the silica layer throughout the extraction process.

12.3.2 Place the thimble in a clean extractor. Place 30–40 mL of toluene in the receiver and 200–250 mL of toluene in the flask.

12.3.3 Pre-extract the glassware by heating the flask until the toluene is boiling. When properly adjusted, one to two drops of toluene will fall per second from the condenser tip into the receiver. Extract the apparatus for a minimum of three hours.

12.3.4 After pre-extraction, cool and disassemble the apparatus. Rinse the thimble with toluene and allow to air dry.

12.3.5 Load the wet sample, filter, and/or disk from Section 11.4.3.6, 11.5.8, 11.6.4, 11.7.3, 11.7.4, or 12.2.2.4 and any nonaqueous liquid from Section 11.6.3 into the thimble and manually mix into the sand layer with a clean metal spatula, carefully breaking up any large lumps of sample.

12.3.6 Reassemble the pre-extracted SDS apparatus, and add a fresh charge of toluene to the receiver and reflux flask. Apply power to the heating mantle to begin refluxing. Adjust the reflux rate to match the rate of percolation through the sand and silica beds until water removal lessens the restriction to toluene flow. Frequently check the apparatus for foaming during the first two hours of extraction. If foaming occurs, reduce the reflux rate until foaming subsides.

12.3.7 Drain the water from the receiver at one to two hours and eight to nine hours, or sooner if the receiver fills with water. Reflux the sample for a total of 16–24 hours. Cool and disassemble the apparatus. Record the total volume of water collected.

12.3.8 Remove the distilling flask. Drain the water from the Dean-Stark receiver and add any toluene in the receiver to the extract in the flask.

12.3.9 Concentrate the extract using one of the macro-concentration procedures in Section 12.6 per the following:

12.3.9.1 Extracts from the particles in an aqueous sample containing less than 1% solids (Section 11.4.3.6).

12.3.9.1.1 Concentrate the extract to approximately 5 mL using the rotary evaporator or heating mantle procedures in Section 12.6.1 or 12.6.2.

12.3.9.1.2 Quantitatively transfer the extract through the sodium sulfate (Section 12.1.3) into the apparatus that was set aside (Section 12.1.4.2) and reconcentrate to the level of the toluene.

12.3.9.1.3 Adjust to approximately 10 mL with hexane, transfer to a 250 mL separatory funnel, and proceed with back-extraction (Section 12.5).

12.3.9.2 Extracts from particles (Sections 11.5 through 11.6) or from the SPE filter and disk (Section 12.2.2.4)—Concentrate to approximately 10 mL using the rotary evaporator or heating mantle (Section 12.6.1 or 12.6.2), transfer to a 250 mL separatory funnel, and proceed with back-extraction (Section 12.5).

12.4 Extraction of Tissue—Two procedures are provided for tissue extraction.

12.4.1 Soxhlet extraction (Reference 21).

12.4.1.1 Add 30–40 g of powdered anhydrous sodium sulfate to each of the beakers (Section 11.8.4) and mix thoroughly. Cover the beakers with aluminum foil and allow to equilibrate for 12–24 hours. Remix prior to extraction to prevent clumping.

12.4.1.2 Assemble and pre-extract the Soxhlet apparatus per Sections 12.3.1 through 12.3.4, except use the methylene chloride:hexane (1:1) mixture for the pre-extraction and rinsing and omit the quartz sand. The Dean-Stark moisture trap may also be omitted, if desired.

12.4.1.3 Reassemble the pre-extracted Soxhlet apparatus and add a fresh charge of methylene chloride:hexane to the reflux flask.

12.4.1.4 Transfer the sample/sodium sulfate mixture (Section 12.4.1.1) to the Soxhlet thimble, and install the thimble in the Soxhlet apparatus.

12.4.1.5 Rinse the beaker with several portions of solvent mixture and add to the thimble. Fill the thimble/receiver with solvent. Extract for 18–24 hours.

12.4.1.6 After extraction, cool and disassemble the apparatus.

12.4.1.7 Quantitatively transfer the extract to a macro-concentration device (Section 12.6), and concentrate to near dryness. Set aside the concentration apparatus for re-use.

12.4.1.8 Complete the removal of the solvent using the nitrogen blowdown procedure (Section 12.7) and a water bath temperature of 60 °C. Weigh the receiver, record the weight, and return the receiver to the blowdown apparatus, concentrating the residue until a constant weight is obtained.

12.4.1.9 Percent lipid determination—The lipid content is determined by extraction of tissue with the same solvent system (methylene chloride:hexane) that was used in EPA's National Dioxin Study (Reference 22) so that lipid contents are consistent with that study.

12.4.1.9.1 Redissolve the residue in the receiver in hexane and spike 1.0 mL of the cleanup standard (Section 7.11) into the solution.

12.4.1.9.2 Transfer the residue/hexane to the anthropogenic isolation column (Section 13.7.1) or bottle for the acidified silica gel batch cleanup (Section 13.7.2), retaining the boiling chips in the concentration apparatus. Use several rinses to assure that all material is transferred. If necessary, sonicate or heat the receiver slightly to assure that all material is re-dissolved. Allow the receiver to dry. Weigh the receiver and boiling chips.

12.4.1.9.3 Calculate the lipid content to the nearest three significant figures as follows:

$$\text{Percent lipid} = \frac{\text{Weight of residue (g)}}{\text{Weight of tissue (g)}} \times 100$$

12.4.1.9.4 It is not necessary to determine the lipid content of the blank, IPR, or OPR aliquots.

12.4.2 HCl digestion/extraction and concentration (References 23–26).

12.4.2.1 Add 200 mL of 6 N HCl and 200 mL of methylene chloride:hexane (1:1) to the sample and QC aliquots (Section 11.8.4).

12.4.2.2 Cap and shake each bottle one to three times. Loosen the cap in a hood to vent excess pressure. Shake each bottle for 10–30 seconds and vent.

12.4.2.3 Tightly cap and place on shaker. Adjust the shaker action and speed so that the acid, solvent, and tissue are in constant motion. However, take care to avoid such violent action that the bottle may be dislodged from the shaker. Shake for 12–24 hours.

12.4.2.4 After digestion, remove the bottles from the shaker. Allow the bottles to stand so that the solvent and acid layers separate.

12.4.2.5 Decant the solvent through a glass funnel with glass-fiber filter (Sections 6.5.2 through 6.5.3) containing approximately 10 g of granular anhydrous sodium sulfate (Section 7.2.1) into a macro-concentration apparatus (Section 12.6). Rinse the contents of the bottle with two 25 mL portions of hexane and pour through the sodium sulfate into the apparatus.

12.4.2.6 Concentrate the solvent to near dryness using a macro-concentration procedure (Section 12.6).

12.4.2.7 Complete the removal of the solvent using the nitrogen blowdown apparatus (Section 12.7) and a water bath temperature of 60 °C. Weigh the receiver, record the weight, and return the receiver to the blowdown apparatus, concentrating the residue until a constant weight is obtained.

12.4.2.8 Percent lipid determination—The lipid content is determined in the same solvent system [methylene chloride:hexane (1:1)] that was used in EPA's National Dioxin Study (Reference 22) so that lipid contents are consistent with that study.

12.4.2.8.1 Redissolve the residue in the receiver in hexane and spike 1.0 mL of the cleanup standard (Section 7.11) into the solution.

12.4.2.8.2 Transfer the residue/hexane to the narrow-mouth 100–200 mL bottle retaining the boiling chips in the receiver. Use several rinses to assure that all material is transferred, to a maximum hexane volume of approximately 70 mL. Allow the receiver to dry. Weigh the receiver and boiling chips.

12.4.2.8.3 Calculate the percent lipid per Section 12.4.1.9.3. It is not necessary to determine the lipid content of the blank, IPR, or OPR aliquots.

12.4.2.9 Clean up the extract per Section 13.7.3.

12.5 Back-Extraction with Base and Acid.

12.5.1 Spike 1.0 mL of the cleanup standard (Section 7.11) into the separatory funnels containing the sample and QC extracts from Section 12.1.4.1, 12.3.9.1.3, or 12.3.9.2.

12.5.2 Partition the extract against 50 mL of potassium hydroxide solution (Section 7.1.1). Shake for two minutes with periodic venting into a hood. Remove and discard the aqueous layer. Repeat the base washing until no color is visible in the aqueous layer, to a maximum of four washings. Minimize contact time between the extract and the base to prevent degradation of the CDDs/CDFs. Stronger potassium hydroxide solutions may be employed for back-extraction, provided that the laboratory meets the specifications for labeled compound recovery and demonstrates acceptable performance using the procedure in Section 9.2.

12.5.3 Partition the extract against 50 mL of sodium chloride solution (Section 7.1.4) in the same way as with base. Discard the aqueous layer.

12.5.4 Partition the extract against 50 mL of sulfuric acid (Section 7.1.2) in the same way as with base. Repeat the acid washing until no color is visible in the aqueous layer, to a maximum of four washings.

12.5.5 Repeat the partitioning against sodium chloride solution and discard the aqueous layer.

12.5.6 Pour each extract through a drying column containing 7–10 cm of granular anhydrous sodium sulfate (Section 7.2.1). Rinse the separatory funnel with 30–50 mL of solvent, and pour through the drying column. Collect each extract in a round-bottom flask. Re-concentrate the sample and QC aliquots per Sections 12.6 through 12.7, and clean up the samples and QC aliquots per Section 13.

12.6 Macro-Concentration—Extracts in toluene are concentrated using a rotary evaporator or a heating mantle; extracts in methylene chloride or hexane are concentrated using a rotary evaporator, heating mantle, or Kuderna-Danish apparatus.

12.6.1 Rotary evaporation—Concentrate the extracts in separate round-bottom flasks.

12.6.1.1 Assemble the rotary evaporator according to manufacturer's instructions, and warm the water bath to 45 °C. On a daily basis, preclean the rotary evaporator by concentrating 100 mL of clean extraction solvent through the system. Archive both the concentrated solvent and the solvent in the catch flask for a contamination check if necessary. Between samples, three 2–3 mL aliquots of solvent should be rinsed down the feed tube into a waste beaker.

12.6.1.2 Attach the round-bottom flask containing the sample extract to the rotary evaporator. Slowly apply vacuum to the system, and begin rotating the sample flask.

12.6.1.3 Lower the flask into the water bath, and adjust the speed of rotation and the temperature as required to complete concentration in 15–20 minutes. At the proper rate of concentration, the flow of solvent into the receiving flask will be steady, but no bumping or visible boiling of the extract will occur.

NOTE: If the rate of concentration is too fast, analyte loss may occur.

12.6.1.4 When the liquid in the concentration flask has reached an apparent volume of approximately 2 mL, remove the flask from the water bath and stop the rotation. Slowly and carefully admit air into the system. Be sure not to open the valve so quickly that the sample is blown out of the flask. Rinse the feed tube with approximately 2 mL of solvent.

12.6.1.5 Proceed to Section 12.6.4 for preparation for back-extraction or micro-concentration and solvent exchange.

12.6.2 Heating mantle—Concentrate the extracts in separate round-bottom flasks.

12.6.2.1 Add one or two clean boiling chips to the round-bottom flask, and attach a three-ball macro Snyder column. Prewet the column by adding approximately 1 mL of solvent through the top. Place the round-bottom flask in a heating mantle, and apply heat as required to complete the concentration in 15–20 minutes. At the proper rate of distillation, the balls of the column will actively chatter, but the chambers will not flood.

12.6.2.2 When the liquid has reached an apparent volume of approximately 10 mL, remove the round-bottom flask from the heating mantle and allow the solvent to drain and cool for at least 10 minutes. Remove the Snyder column and rinse the glass joint into the receiver with small portions of solvent.

12.6.2.3 Proceed to Section 12.6.4 for preparation for back-extraction or micro-concentration and solvent exchange.

12.6.3 Kuderna-Danish (K-D)—Concentrate the extracts in separate 500 mL K-D flasks equipped with 10 mL concentrator tubes. The K-D technique is used for solvents such as methylene chloride and hexane. Toluene is difficult to concentrate using the K-D technique unless a water bath fed by a steam generator is used.

12.6.3.1 Add one to two clean boiling chips to the receiver. Attach a three-ball macro Snyder column. Prewet the column by adding approximately 1 mL of solvent through the top. Place the K-D apparatus in a hot water bath so that the entire lower rounded surface of the flask is bathed with steam.

12.6.3.2 Adjust the vertical position of the apparatus and the water temperature as required to complete the concentration in 15–20 minutes. At the proper rate of distillation, the balls of the column will actively chatter but the chambers will not flood.

12.6.3.3 When the liquid has reached an apparent volume of 1 mL, remove the K-D apparatus from the bath and allow the solvent to drain and cool for at least 10 minutes. Remove the Snyder column and rinse the flask and its lower joint into the concentrator tube with 1–2 mL of solvent. A 5 mL syringe is recommended for this operation.

12.6.3.4 Remove the three-ball Snyder column, add a fresh boiling chip, and attach a two-ball micro Snyder column to the concentrator tube. Prewet the column by adding approximately 0.5 mL of solvent through the top. Place the apparatus in the hot water bath.

12.6.3.5 Adjust the vertical position and the water temperature as required to complete the concentration in 5–10 minutes. At the proper rate of distillation, the balls of the column will actively chatter but the chambers will not flood.

12.6.3.6 When the liquid reaches an apparent volume of 0.5 mL, remove the apparatus from the water bath and allow to drain and cool for at least 10 minutes.

12.6.3.7 Proceed to 12.6.4 for preparation for back-extraction or micro-concentration and solvent exchange.

12.6.4 Preparation for back-extraction or micro-concentration and solvent exchange.

12.6.4.1 For back-extraction (Section 12.5), transfer the extract to a 250 mL separatory funnel. Rinse the concentration vessel with small portions of hexane, adjust the hexane volume in the separatory funnel to 10–20 mL, and proceed to back-extraction (Section 12.5).

12.6.4.2 For determination of the weight of residue in the extract, or for clean-up procedures other than back-extraction, transfer the extract to a blowdown vial using two to three rinses of solvent. Proceed with micro-concentration and solvent exchange (Section 12.7).

12.7 Micro-Concentration and Solvent Exchange.

12.7.1 Extracts to be subjected to GPC or HPLC cleanup are exchanged into methylene chloride. Extracts to be cleaned up using silica gel, alumina, carbon, and/or Florisil are exchanged into hexane.

12.7.2 Transfer the vial containing the sample extract to a nitrogen blowdown device. Adjust the flow of nitrogen so that the surface of the solvent is just visibly disturbed.

NOTE: A large vortex in the solvent may cause analyte loss.

12.7.3 Lower the vial into a 45 °C water bath and continue concentrating.

12.7.3.1 If the extract is to be concentrated to dryness for weight determination (Sections 12.4.1.8, 12.4.2.7, and 13.7.1.4), blow dry until a constant weight is obtained.

12.7.3.2 If the extract is to be concentrated for injection into the GC/MS or the solvent is to be exchanged for extract cleanup, proceed as follows:

12.7.4 When the volume of the liquid is approximately 100 L, add 2–3 mL of the desired solvent (methylene chloride for GPC and HPLC, or hexane for the other cleanups) and continue concentration to approximately 100 µL. Repeat the addition of solvent and concentrate once more.

12.7.5 If the extract is to be cleaned up by GPC, adjust the volume of the extract to 5.0 mL with methylene chloride. If the extract is to be cleaned up by HPLC, further concentrate the extract to 30 µL. Proceed with GPC or HPLC cleanup (Section 13.2 or 13.6, respectively).

12.7.6 If the extract is to be cleaned up by column chromatography (alumina, silica gel, Carbopak/Celite, or Florisil), bring the final volume to 1.0 mL with hexane. Proceed with column cleanups (Sections 13.3 through 13.5 and 13.8).

12.7.7 If the extract is to be concentrated for injection into the GC/MS (Section 14), quantitatively transfer the extract to a 0.3 mL conical vial for final concentration, rinsing the larger vial with hexane and adding the rinse to the conical vial. Reduce the volume to approximately 100 µL. Add 10 µL of nonane to the vial, and evaporate the solvent to the level of the nonane. Seal the vial and label with the sample number. Store in the dark at room temperature until ready for GC/MS analysis. If GC/MS analysis will not be performed on the same day, store the vial at < −10 °C.

13.0 Extract Cleanup

13.1 Cleanup may not be necessary for relatively clean samples (e.g., treated effluents, groundwater, drinking water). If particular circumstances require the use of a cleanup procedure, the analyst may use any or all of the procedures below or any other appropriate procedure. Before using a cleanup procedure, the analyst must demonstrate that the requirements of Section 9.2 can be met using the cleanup procedure. If only 2,3,7,8-TCDD and 2,3,7,8-TCDF are to be determined, the cleanup procedures may be optimized for isolation of these two compounds.

13.1.1 Gel permeation chromatography (Section 13.2) removes high molecular weight interferences that cause GC column performance to degrade. It should be used for all soil and sediment extracts and may be used for water extracts that are expected to contain high molecular weight organic compounds (e.g., polymeric materials, humic acids).

13.1.2 Acid, neutral, and basic silica gel (Section 13.3), alumina (Section 13.4), and Florisil (Section 13.8) are used to remove nonpolar and polar interferences. Alumina and Florisil are used to remove chlorodiphenyl ethers.

13.1.3 Carbopak/Celite (Section 13.5) is used to remove nonpolar interferences.

13.1.4 HPLC (Section 13.6) is used to provide specificity for the 2,3,7,8-substituted and other CDD and CDF isomers.

13.1.5 The anthropogenic isolation column (Section 13.7.1), acidified silica gel batch adsorption procedure (Section 13.7.2), and sulfuric acid and base back-extraction (Section 13.7.3) are used for removal of lipids from tissue samples.

13.2 Gel Permeation Chromatography (GPC).

13.2.1 Column packing.

13.2.1.1 Place 70–75 g of SX–3 Bio-beads (Section 6.7.1.1) in a 400–500 mL beaker.

13.2.1.2 Cover the beads with methylene chloride and allow to swell overnight (a minimum of 12 hours).

13.2.1.3 Transfer the swelled beads to the column (Section 6.7.1.1) and pump solvent through the column, from bottom to top, at 4.5–5.5 mL/minute prior to connecting the column to the detector.

13.2.1.4 After purging the column with solvent for one to two hours, adjust the column head pressure to 7–10 psig and purge for four to five hours to remove air. Maintain a head pressure of 7–10 psig. Connect the column to the detector (Section 6.7.1.4).

13.2.2 Column calibration.

13.2.2.1 Load 5 mL of the calibration solution (Section 7.4) into the sample loop.

13.2.2.2 Inject the calibration solution and record the signal from the detector. The elution pattern will be corn oil, bis(2-ethyl hexyl)phthalate, pentachlorophenol, perylene, and sulfur.

13.2.2.3 Set the ''dump time'' to allow >85% removal of the corn oil and >85% collection of the phthalate.

13.2.2.4 Set the ''collect time'' to the peak minimum between perylene and sulfur.

13.2.2.5 Verify the calibration with the calibration solution after every 20 extracts. Calibration is verified if the recovery of the pentachlorophenol is greater than 85%. If calibration is not verified, the system shall be recalibrated using the calibration solution, and the previous 20 samples shall be re-extracted and cleaned up using the calibrated GPC system.

13.2.3 Extract cleanup—GPC requires that the column not be overloaded. The column specified in this method is designed to handle a maximum of 0.5 g of high molecular weight material in a 5 mL extract. If the extract is known or expected to contain more than 0.5 g, the extract is split into aliquots for GPC, and the aliquots are combined after elution from the column. The residue content of the extract may be obtained gravimetrically by evaporating the solvent from a 50 µL aliquot.

13.2.3.1 Filter the extract or load through the filter holder (Section 6.7.1.3) to remove the particles. Load the 5.0 mL extract onto the column.

13.2.3.2 Elute the extract using the calibration data determined in Section 13.2.2. Collect the eluate in a clean 400–500 mL beaker.

13.2.3.3 Rinse the sample loading tube thoroughly with methylene chloride between extracts to prepare for the next sample.

13.2.3.4 If a particularly dirty extract is encountered, a 5.0 mL methylene chloride blank shall be run through the system to check for carry-over.

13.2.3.5 Concentrate the eluate per Sections 12.6 and 12.7 for further cleanup or injection into the GC/MS.

13.3 Silica Gel Cleanup.

13.3.1 Place a glass-wool plug in a 15 mm ID chromatography column (Section 6.7.4.2). Pack the column bottom to top with: 1 g silica gel (Section 7.5.1.1), 4 g basic silica gel (Section 7.5.1.3), 1 g silica gel, 8 g acid silica gel (Section 7.5.1.2), 2 g silica gel, and 4 g granular anhydrous sodium sulfate (Section 7.2.1). Tap the column to settle the adsorbents.

13.3.2 Pre-elute the column with 50–100 mL of hexane. Close the stopcock when the hexane is within 1 mm of the sodium sulfate. Discard the eluate. Check the column for channeling. If channeling is present, discard the column and prepare another.

13.3.3 Apply the concentrated extract to the column. Open the stopcock until the extract is within 1 mm of the sodium sulfate.

13.3.4 Rinse the receiver twice with 1 mL portions of hexane, and apply separately to the column. Elute the CDDs/CDFs with 100 mL hexane, and collect the eluate.

13.3.5 Concentrate the eluate per Sections 12.6 and 12.7 for further cleanup or injection into the HPLC or GC/MS.

13.3.6 For extracts of samples known to contain large quantities of other organic compounds (such as paper mill effluents), it may be advisable to increase the capacity of the silica gel column. This may be accomplished by increasing the strengths of the acid and basic silica gels. The acid silica gel (Section 7.5.1.2) may be increased in strength to as much as 44% w/w (7.9 g sulfuric acid added to 10 g silica gel). The basic silica gel (Section 7.5.1.3) may be increased in strength to as much as 33% w/w (50 mL 1N NaOH added to 100 g silica gel), or the potassium silicate (Section 7.5.1.4) may be used.

NOTE: The use of stronger acid silica gel (44% w/w) may lead to charring of organic compounds in some extracts. The charred material may retain some of the analytes and lead to lower recoveries of CDDs/CDFs. Increasing the strengths of the acid and basic silica gel may also require different volumes of hexane than those specified above to elute the analytes off the column. Therefore, the performance of the method after such modifications must be verified by the procedure in Section 9.2.

13.4 Alumina Cleanup.

13.4.1 Place a glass-wool plug in a 15 mm ID chromatography column (Section 6.7.4.2).

13.4.2 If using acid alumina, pack the column by adding 6 g acid alumina (Section 7.5.2.1). If using basic alumina, substitute 6 g basic alumina (Section 7.5.2.2). Tap the column to settle the adsorbents.

13.4.3 Pre-elute the column with 50–100 mL of hexane. Close the stopcock when the hexane is within 1 mm of the alumina.

13.4.4 Discard the eluate. Check the column for channeling. If channeling is present, discard the column and prepare another.

13.4.5 Apply the concentrated extract to the column. Open the stopcock until the extract is within 1 mm of the alumina.

13.4.6 Rinse the receiver twice with 1 mL portions of hexane and apply separately to the column. Elute the interfering compounds with 100 mL hexane and discard the eluate.

13.4.7 The choice of eluting solvents will depend on the choice of alumina (acid or basic) made in Section 13.4.2.

13.4.7.1 If using acid alumina, elute the CDDs/CDFs from the column with 20 mL methylene chloride:hexane (20:80 v/v). Collect the eluate.

13.4.7.2 If using basic alumina, elute the CDDs/CDFs from the column with 20 mL methylene chloride:hexane (50:50 v/v). Collect the eluate.

13.4.8 Concentrate the eluate per Sections 12.6 and 12.7 for further cleanup or injection into the HPLC or GC/MS.

13.5 Carbon Column.

13.5.1 Cut both ends from a 10 mL disposable serological pipet (Section 6.7.3.2) to produce a 10 cm column. Fire-polish both ends and flare both ends if desired. Insert a glass-wool plug at one end, and pack the column with 0.55 g of Carbopak/Celite (Section 7.5.3.3) to form an adsorbent bed approximately 2 cm long. Insert a glass-wool plug on top of the bed to hold the adsorbent in place.

13.5.2 Pre-elute the column with 5 mL of toluene followed by 2 mL of methylene chloride: methanol:toluene (15:4:1 v/v), 1 mL of methylene chloride:cyclohexane (1:1 v/v), and 5 mL of hexane. If the flow rate of eluate exceeds 0.5 mL/minute, discard the column.

13.5.3 When the solvent is within 1 mm of the column packing, apply the sample extract to the column. Rinse the sample container twice with 1 mL portions of hexane and apply separately to the column. Apply 2 mL of hexane to complete the transfer.

13.5.4 Elute the interfering compounds with two 3 mL portions of hexane, 2 mL of methylene chloride:cyclohexane (1:1 v/v), and 2 mL of methylene chloride:methanol:toluene (15:4:1 v/v). Discard the eluate.

13.5.5 Invert the column, and elute the CDDs/CDFs with 20 mL of toluene. If carbon particles are present in the eluate, filter through glass-fiber filter paper.

13.5.6 Concentrate the eluate per Sections 12.6 and 12.7 for further cleanup or injection into the HPLC or GC/MS.

13.6 HPLC (Reference 6).

13.6.1 Column calibration.

13.6.1.1 Prepare a calibration standard containing the 2,3,7,8-substituted isomers and/or other isomers of interest at a concentration of approximately 500 pg/μL in methylene chloride.

13.6.1.2 Inject 30 μL of the calibration solution into the HPLC and record the signal from the detector. Collect the eluant for reuse. The elution order will be the tetra- through octa-isomers.

13.6.1.3 Establish the collection time for the tetra-isomers and for the other isomers of interest. Following calibration, flush the injection system with copious quantities of methylene chloride, including a minimum of five 50 μL injections while the detector is monitored, to ensure that residual CDDs/CDFs are removed from the system.

13.6.1.4 Verify the calibration with the calibration solution after every 20 extracts. Calibration is verified if the recovery of the CDDs/CDFs from the calibration standard (Section 13.6.1.1) is 75–125% compared to the calibration (Section 13.6.1.2). If calibration is not verified, the system shall be recalibrated using the calibration solution, and the previous 20 samples shall be re-extracted and cleaned up using the calibrated system.

13.6.2 Extract cleanup—HPLC requires that the column not be overloaded. The column specified in this method is designed to handle a maximum of 30 μL of extract. If the extract cannot be concentrated to less than 30 μL, it is split into fractions and the fractions are combined after elution from the column.

13.6.2.1 Rinse the sides of the vial twice with 30 μL of methylene chloride and reduce to 30 μL with the evaporation apparatus (Section 12.7).

13.6.2.2 Inject the 30 μL extract into the HPLC.

13.6.2.3 Elute the extract using the calibration data determined in Section 13.6.1. Collect the fraction(s) in a clean 20 mL concentrator tube containing 5 mL of hexane:acetone (1:1 v/v).

13.6.2.4 If an extract containing greater than 100 ng/mL of total CDD or CDF is encountered, a 30 μL methylene chloride blank shall be run through the system to check for carry-over.

13.6.2.5 Concentrate the eluate per Section 12.7 for injection into the GC/MS.

13.7 Cleanup of Tissue Lipids—Lipids are removed from the Soxhlet extract using either the anthropogenic isolation column (Section 13.7.1) or acidified silica gel (Section 13.7.2), or are removed from the HCl digested extract using sulfuric acid and base back-extraction (Section 13.7.3).

13.7.1 Anthropogenic isolation column (References 22 and 27)—Used for removal of lipids from the Soxhlet/SDS extraction (Section 12.4.1).

13.7.1.1 Prepare the column as given in Section 7.5.4.

13.7.1.2 Pre-elute the column with 100 mL of hexane. Drain the hexane layer to the top of the column, but do not expose the sodium sulfate.

13.7.1.3 Load the sample and rinses (Section 12.4.1.9.2) onto the column by draining each portion to the top of the bed. Elute the CDDs/CDFs from the column into the apparatus used for concentration (Section 12.4.1.7) using 200 mL of hexane.

13.7.1.4 Concentrate the cleaned up extract (Sections 12.6 through 12.7) to constant weight per Section 12.7.3.1. If more than 500 mg of material remains, repeat the cleanup using a fresh anthropogenic isolation column.

13.7.1.5 Redissolve the extract in a solvent suitable for the additional cleanups to be used (Sections 13.2 through 13.6 and 13.8).

13.7.1.6 Spike 1.0 mL of the cleanup standard (Section 7.11) into the residue/solvent.

13.7.1.7 Clean up the extract using the procedures in Sections 13.2 through 13.6 and 13.8. Alumina (Section 13.4) or Florisil (Section 13.8) and carbon (Section 13.5) are recommended as minimum additional cleanup steps.

13.7.1.8 Following cleanup, concentrate the extract to 10 μL as described in Section 12.7 and proceed with the analysis in Section 14.

13.7.2 Acidified silica gel (Reference 28)—Procedure alternate to the anthropogenic isolation column (Section 13.7.1) that is used for removal of lipids from the Soxhlet/SDS extraction (Section 12.4.1).

13.7.2.1 Adjust the volume of hexane in the bottle (Section 12.4.1.9.2) to approximately 200 mL.

13.7.2.2 Spike 1.0 mL of the cleanup standard (Section 7.11) into the residue/solvent.

13.7.2.3 Drop the stirring bar into the bottle, place the bottle on the stirring plate, and begin stirring.

13.7.2.4 Add 30–100 g of acid silica gel (Section 7.5.1.2) to the bottle while stirring, keeping the silica gel in motion. Stir for two to three hours.

NOTE: 30 grams of silica gel should be adequate for most samples and will minimize contamination from this source.

13.7.2.5 After stirring, pour the extract through approximately 10 g of granular anhydrous sodium sulfate (Section 7.2.1) contained in a funnel with glass-fiber filter into a macro contration device (Section 12.6). Rinse the bottle and sodium sulfate with hexane to complete the transfer.

13.7.2.6 Concentrate the extract per Sections 12.6 through 12.7 and clean up the extract using the procedures in Sections 13.2 through 13.6 and 13.8. Alumina (Section 13.4) or Florisil (Section 13.8) and carbon (Section 13.5) are recommended as minimum additional cleanup steps.

13.7.3 Sulfuric acid and base back-extraction. Used with HCl digested extracts (Section 12.4.2).

13.7.3.1 Spike 1.0 mL of the cleanup standard (Section 7.11) into the residue/solvent (Section 12.4.2.8.2).

13.7.3.2 Add 10 mL of concentrated sulfuric acid to the bottle. Immediately cap and shake one to three times. Loosen cap in a hood to vent excess pressure. Cap and shake the bottle so that the residue/solvent is exposed to the acid for a total time of approximately 45 seconds.

13.7.3.3 Decant the hexane into a 250 mL separatory funnel making sure that no acid is transferred. Complete the quantitative transfer with several hexane rinses.

13.7.3.4 Back extract the solvent/residue with 50 mL of potassium hydroxide solution per Section 12.5.2, followed by two reagent water rinses.

13.7.3.5 Drain the extract through a filter funnel containing approximately 10 g of granular anhydrous sodium sulfate in a glass-fiber filter into a macro concentration device (Section 12.6).

13.7.3.6 Concentrate the cleaned up extract to a volume suitable for the additional cleanups given in Sections 13.2 through 13.6 and 13.8. Gel permeation chromatography (Section 13.2), alumina (Section 13.4) or Florisil (Section 13.8), and Carbopak/Celite (Section 13.5) are recommended as minimum additional cleanup steps.

13.7.3.7 Following cleanup, concentrate the extract to 10 L as described in Section 12.7 and proceed with analysis per Section 14.

13.8 Florisil Cleanup (Reference 29).

13.8.1 Pre-elute the activated Florisil column (Section 7.5.3) with 10 mL of methylene chloride followed by 10 mL of hexane:methylene chloride (98:2 v/v) and discard the solvents.

13.8.2 When the solvent is within 1 mm of the packing, apply the sample extract (in hexane) to the column. Rinse the sample container twice with 1 mL portions of hexane and apply to the column.

13.8.3 Elute the interfering compounds with 20 mL of hexane:methylene chloride (98:2) and discard the eluate.

13.8.4 Elute the CDDs/CDFs with 35 mL of methylene chloride and collect the eluate. Concentrate the eluate per Sections 12.6 through 12.7 for further cleanup or for injection into the HPLC or GC/MS.

14.0 HRGC/HRMS Analysis

14.1 Establish the operating conditions given in Section 10.1.

14.2 Add 10 uL of the appropriate internal standard solution (Section 7.12) to the sample extract immediately prior to injection to minimize the possibility of loss by evaporation, adsorption, or reaction. If an extract is to be reanalyzed and evaporation has occurred, do not add more instrument internal standard solution. Rather, bring the extract back to its previous volume (e.g., 19 L) with pure nonane only (18 L if 2 L injections are used).

14.3 Inject 1.0 µL or 2.0 µL of the concentrated extract containing the internal standard solution, using on-column or splitless injection. The volume injected must be identical to the volume used for calibration (Section 10). Start the GC column initial isothermal hold upon injection. Start MS data collection after the solvent peak elutes. Stop data collection after the OCDD and OCDF have eluted. If only 2,3,7,8-TCDD and 2,3,7,8-TCDF are to be determined, stop data collection after elution of these compounds. Return the column to the initial temperature for analysis of the next extract or standard.

15.0 System and Laboratory Performance

15.1 At the beginning of each 12-hour shift during which analyses are performed, GC/MS system performance and calibration are verified for all CDDs/CDFs and labeled compounds. For these tests, analysis of the CS3 calibration verification (VER) standard (Section 7.13 and Table 4) and the isomer specificity test standards (Section 7.15 and Table 5) shall be used to verify all performance criteria. Adjustment and/or recalibration (Section 10) shall be performed until all performance criteria are met. Only after all performance criteria are met may samples, blanks, IPRs, and OPRs be analyzed.

15.2 MS Resolution—A static resolving power of at least 10,000 (10% valley definition) must be demonstrated at the appropriate m/z before any analysis is performed. Static resolving power checks must be performed at the beginning and at the end of each 12-hour shift according to procedures in Section 10.1.2. Corrective actions must be implemented whenever the resolving power does not meet the requirement.

15.3 Calibration Verification.

15.3.1 Inject the VER standard using the procedure in Section 14.

15.3.2 The m/z abundance ratios for all CDDs/CDFs shall be within the limits in Table 9; otherwise, the mass spectrometer shall be adjusted until the m/z abundance ratios fall within the limits specified, and the verification test shall be repeated. If the adjustment alters the resolution of the mass spectrometer, resolution shall be verified (Section 10.1.2) prior to repeat of the verification test.

15.3.3 The peaks representing each CDD/CDF and labeled compound in the VER standard must be present with S/N of at least 10; otherwise, the mass spectrometer shall be adjusted and the verification test repeated.

15.3.4 Compute the concentration of each CDD/CDF compound by isotope dilution (Section 10.5) for those compounds that have labeled analogs (Table 1). Compute the concentration of the labeled compounds by the internal standard method (Section 10.6). These concentrations are computed based on the calibration data in Section 10.

15.3.5 For each compound, compare the concentration with the calibration verification limit in Table 6. If only 2,3,7,8-TCDD and 2,3,7,8-TCDF are to be determined, compare the concentration to the limit in Table 6a. If all compounds meet the acceptance criteria, calibration has been verified and analysis of standards and sample extracts may proceed. If, however, any compound fails its respective limit, the measurement system is not performing properly for that compound. In this event, prepare a fresh calibration standard or correct the problem causing the failure and repeat the resolution (Section 15.2) and verification (Section 15.3) tests, or recalibrate (Section 10).

15.4 Retention Times and GC Resolution.

15.4.1 Retention times.

15.4.1.1 Absolute—The absolute retention times of the $^{13}C_{12}$-1,2,3,4–TCDD and $^{13}C_{12}$-1,2,3,7,8,9-HxCDD GCMS internal standards in the verification test (Section 15.3) shall be within ±15 seconds of the retention times obtained during calibration (Sections 10.2.1 and 10.2.4).

15.4.1.2 Relative—The relative retention times of CDDs/CDFs and labeled compounds in the verification test (Section 15.3) shall be within the limits given in Table 2.

15.4.2 GC resolution.

15.4.2.1 Inject the isomer specificity standards (Section 7.15) on their respective columns.

15.4.2.2 The valley height between 2,3,7,8-TCDD and the other tetra-dioxin isomers at m/z 319.8965, and between 2,3,7,8-TCDF and the other tetra-furan isomers at m/z 303.9016 shall not exceed 25% on their respective columns (Figures 6 and 7).

15.4.3 If the absolute retention time of any compound is not within the limits specified or if the 2,3,7,8-isomers are not resolved, the GC is not performing properly. In this event, adjust the GC and repeat the verification test (Section 15.3) or recalibrate (Section 10), or replace the GC column and either verify calibration or recalibrate.

15.5 Ongoing Precision and Recovery.

15.5.1 Analyze the extract of the ongoing precision and recovery (OPR) aliquot (Section 11.4.2.5, 11.5.4, 11.6.2, 11.7.4, or 11.8.3.2) prior to analysis of samples from the same batch.

15.5.2 Compute the concentration of each CDD/CDF by isotope dilution for those compounds that have labeled analogs (Section 10.5). Compute the concentration of 1,2,3,7,8,9-HxCDD, OCDF, and each labeled compound by the internal standard method (Section 10.6).

15.5.3 For each CDD/CDF and labeled compound, compare the concentration to the OPR limits given in Table 6. If only 2,3,7,8-TCDD and 2,3,7,8-TCDF are to be determined, compare the concentration to the limits in Table 6a. If all compounds meet the acceptance criteria, system performance is acceptable and analysis of blanks and samples may proceed. If, however, any individual concentration falls outside of the range given, the extraction/concentration processes are not being performed properly for that compound. In this event, correct the problem, re-prepare, extract, and clean up the sample batch and repeat the ongoing precision and recovery test (Section 15.5).

15.5.4 Add results that pass the specifications in Section 15.5.3 to initial and previous ongoing data for each compound in each matrix. Update QC charts to form a graphic representation of continued laboratory performance. Develop a statement of laboratory accuracy for each CDD/CDF in each matrix type by calculating the average percent recovery (R) and the standard deviation of percent recovery (S_R). Express the accuracy as a recovery interval from $R-2S_R$ to $R=2S_R$. For example, if $R=95\%$ and $S_R=5\%$, the accuracy is 85–105%.

15.6 Blank—Analyze the method blank extracted with each sample batch immediately following analysis of the OPR aliquot to demonstrate freedom from contamination and freedom from carryover from the OPR analysis. The results of the analysis of the blank must meet the specifications in Section 9.5.2 before sample analyses may proceed.

16.0 Qualitative Determination

A CDD, CDF, or labeled compound is identified in a standard, blank, or sample when all of the criteria in Sections 16.1 through 16.4 are met.

16.1 The signals for the two exact m/z's in Table 8 must be present and must maximize within the same two seconds.

16.2 The signal-to-noise ratio (S/N) for the GC peak at each exact m/z must be greater than or equal to 2.5 for each CDD or CDF detected in a sample extract, and greater than or equal to 10 for all CDDs/CDFs in the calibration standard (Sections 10.2.3 and 15.3.3).

16.3 The ratio of the integrated areas of the two exact m/z's specified in Table 8 must be within the limit in Table 9, or within ±10% of the ratio in the midpoint (CS3) calibration or calibration verification (VER), whichever is most recent.

16.4 The relative retention time of the peak for a 2,3,7,8-substituted CDD or CDF must be within the limit in Table 2. The retention time of peaks representing non-

2,3,7,8-substituted CDDs/CDFs must be within the retention time windows established in Section 10.3.

16.5 Confirmatory Analysis—Isomer specificity for 2,3,7,8-TCDF cannot be achieved on the DB–5 column. Therefore, any sample in which 2,3,7,8-TCDF is identified by analysis on a DB–5 column must have a confirmatory analysis performed on a DB–225, SP–2330, or equivalent GC column. The operating conditions in Section 10.1.1 may be adjusted to optimize the analysis on the second GC column, but the GC/MS must meet the mass resolution and calibration specifications in Section 10.

16.6 If the criteria for identification in Sections 16.1 through 16.5 are not met, the CDD or CDF has not been identified and the results may not be reported for regulatory compliance purposes. If interferences preclude identification, a new aliquot of sample must be extracted, further cleaned up, and analyzed.

17.0 Quantitative Determination

17.1 Isotope Dilution Quantitation—By adding a known amount of a labeled compound to every sample prior to extraction, correction for recovery of the CDD/CDF can be made because the CDD/CDF and its labeled analog exhibit similar effects upon extraction, concentration, and gas chromatography. Relative response (RR) values are used in conjunction with the initial calibration data described in Section 10.5 to determine concentrations directly, so long as labeled compound spiking levels are constant, using the following equation:

$$C_{ex}\ (\text{ng/mL}) = \frac{(A1_n + A2_n)\, C_l}{(A1_l + A2_l)\, RR}$$

where:

C_{ex} = The concentration of the CDD/CDF in the extract, and the other terms are as defined in Section 10.5.2.

17.1.1 Because of a potential interference, the labeled analog of OCDF is not added to the sample. Therefore, OCDF is quantitated against labeled OCDD. As a result, the concentration of OCDF is corrected for the recovery of the labeled OCDD. In instances where OCDD and OCDF behave differently during sample extraction, concentration, and cleanup procedures, this may decrease the accuracy of the OCDF results. However, given the low toxicity of this compound relative to the other dioxins and furans, the potential decrease in accuracy is not considered significant.

17.1.2 Because $^{13}C_{12}$-1,2,3,7,8,9-HxCDD is used as an instrument internal standard (*i.e.*, not added before extraction of the sample), it cannot be used to quantitate the 1,2,3,7,8,9-HxCDD by strict isotope dilution procedures. Therefore, 1,2,3,7,8,9-HxCDD is quantitated using the averaged response of the labeled analogs of the other two 2,3,7,8-substituted HxCDD's: 1,2,3,4,7,8-HxCDD and 1,2,3,6,7,8-HxCDD. As a result, the concentration of 1,2,3,7,8,9-HxCDD is corrected for the average recovery of the other two HxCDD's.

17.1.3 Any peaks representing non-2,3,7,8-substituted CDDs/CDFs are quantitated using an average of the response factors from all of the labeled 2,3,7,8-isomers at the same level of chlorination.

17.2 Internal Standard Quantitation and Labeled Compound Recovery.

17.2.1 Compute the concentrations of 1,2,3,7,8,9-HxCDD, OCDF, the ^{13}C-labeled analogs and the ^{37}C-labeled cleanup standard in the extract using the response factors determined from the initial calibration data (Section 10.6) and the following equation:

$$C_{ex}\ (\text{ng/mL}) = \frac{(A1_s + A2_s)\, C_{is}}{(A1_{is} + A2_{is})\, RF}$$

where:

C_{ex} = The concentration of the CDD/CDF in the extract, and the other terms are as defined in Section 10.6.1.

NOTE: There is only one m/z for the ^{37}Cl-labeled standard.

17.2.2 Using the concentration in the extract determined above, compute the percent recovery of the ^{13}C-labeled compounds and the ^{37}C-labeled cleanup standard using the following equation:

$$\text{Recovery (\%)} = \frac{\text{Concentration found } (\mu\text{g/mL})}{\text{Concentration spiked } (\mu\text{g/mL})} \times 100$$

17.3 The concentration of a CDD/CDF in the solid phase of the sample is computed using the concentration of the compound in the extract and the weight of the solids (Section 11.5.1), as follows:

$$\text{Concentration in solid (ng/kg)} = \frac{\left(C_{ex} \times V_{ex}\right)}{W_s}$$

where:

C_{ex} = The concentration of the compound in the extract.

V_{ex} = The extract volume in mL.

W_s = The sample weight (dry weight) in kg.

17.4 The concentration of a CDD/CDF in the aqueous phase of the sample is computed using the concentration of the compound in the extract and the volume of water extracted (Section 11.4 or 11.5), as follows:

$$\text{Concentration in aqueous phase (pg/L)} = \frac{\left(C_{ex} \times V_{ex}\right)}{V_s}$$

where:

C_{ex} = The concentration of the compound in the extract.

V_{ex} = The extract volume in mL.

V_s = The sample volume in liters.

17.5 If the SICP area at either quantitation m/z for any compound exceeds the calibration range of the system, a smaller sample aliquot is extracted.

17.5.1 For aqueous samples containing 1% solids or less, dilute 100 mL, 10 mL, etc., of sample to 1 L with reagent water and re-prepare, extract, clean up, and analyze per Sections 11 through 14.

17.5.2 For samples containing greater than 1% solids, extract an amount of sample equal to $^{1}/_{10}$, $^{1}/_{100}$, etc., of the amount used in Section 11.5.1. Re-prepare, extract, clean up, and analyze per Sections 11 through 14.

17.5.3 If a smaller sample size will not be representative of the entire sample, dilute the sample extract by a factor of 10, adjust the concentration of the instrument internal standard to 100 pg/µL in the extract, and analyze an aliquot of this diluted extract by the internal standard method.

17.6 Results are reported to three significant figures for the CDDs/CDFs and labeled compounds found in all standards, blanks, and samples.

17.6.1 Reporting units and levels.

17.6.1.1 Aqueous samples—Report results in pg/L (parts-per-quadrillion).

17.6.1.2 Samples containing greater than 1% solids (soils, sediments, filter cake, compost)—Report results in ng/kg based on the dry weight of the sample. Report the percent solids so that the result may be corrected.

17.6.1.3 Tissues—Report results in ng/kg of wet tissue, not on the basis of the lipid content of the sample. Report the percent lipid content, so that the data user can calculate the concentration on a lipid basis if desired.

17.6.1.4 Reporting level.

17.6.1.4.1 Standards (VER, IPR, OPR) and samples—Report results at or above the minimum level (Table 2). Report results below the minimum level as not detected or as required by the regulatory authority.

17.6.1.4.2 Blanks—Report results above one-third the ML.

17.6.2 Results for CDDs/CDFs in samples that have been diluted are reported at the least dilute level at which the areas at the quantitation m/z's are within the calibration range (Section 17.5).

17.6.3 For CDDs/CDFs having a labeled analog, results are reported at the least dilute level at which the area at the quantitation m/z is within the calibration range (Section 17.5) and the labeled compound recovery is within the normal range for the method (Section 9.3 and Tables 6, 6a, 7, and 7a).

17.6.4 Additionally, if requested, the total concentration of all isomers in an individual level of chlorination (*i.e.*, total TCDD, total TCDF, total Paced, etc.) may be reported by summing the concentrations of all isomers identified in that level of chlorination, including both 2,3,7,8-substituted and non-2,3,7,8-substituted isomers.

18.0 Analysis of Complex Samples

18.1 Some samples may contain high levels (>10 ng/L; >1000 ng/kg) of the compounds of interest, interfering compounds, and/or polymeric materials. Some extracts will not concentrate to 10 µL (Section 12.7); others may overload the GC column and/or mass spectrometer.

18.2 Analyze a smaller aliquot of the sample (Section 17.5) when the extract will not concentrate to 10 µL after all cleanup procedures have been exhausted.

18.3 Chlorodiphenyl Ethers—If chromatographic peaks are detected at the retention time of any CDDs/CDFs in any of the m/z channels being monitored for the chlorodiphenyl ethers (Table 8), cleanup procedures must be employed until these interferences are removed. Alumina (Section 13.4) and Florisil (Section 13.8) are recommended for removal of chlorodiphenyl ethers.

18.4 Recovery of Labeled Compounds—In most samples, recoveries of the labeled compounds will be similar to those from reagent water or from the alternate matrix (Section 7.6).

18.4.1 If the recovery of any of the labeled compounds is outside of the normal range (Table 7), a diluted sample shall be analyzed (Section 17.5).

18.4.2 If the recovery of any of the labeled compounds in the diluted sample is outside of normal range, the calibration verification standard (Section 7.13) shall be analyzed and calibration verified (Section 15.3).

18.4.3 If the calibration cannot be verified, a new calibration must be performed and the original sample extract reanalyzed.

18.4.4 If the calibration is verified and the diluted sample does not meet the limits for labeled compound recovery, the method does not apply to the sample being analyzed and the result may not be reported for regulatory compliance purposes. In this case, alternate extraction and cleanup procedures in this method must be employed to resolve the interference. If all cleanup procedures in this method have been employed and labeled compound recovery remains outside of the normal range, extraction and/or cleanup procedures that are beyond this scope of this method will be required to analyze these samples.

19.0 Pollution Prevention

19.1 The solvents used in this method pose little threat to the environment when managed properly. The solvent evaporation techniques used in this method are amenable to solvent recovery, and it is recommended that the laboratory recover solvents wherever feasible.

19.2 Standards should be prepared in volumes consistent with laboratory use to minimize disposal of standards.

20.0 Waste Management

20.1 It is the laboratory's responsibility to comply with all federal, state, and local regulations governing waste management, particularly the hazardous waste identification rules and land disposal restrictions, and to protect the air, water, and land by minimizing and controlling all releases from fume hoods and bench operations. Compliance is also required with any sewage discharge permits and regulations.

20.2 Samples containing HCl to pH <2 are hazardous and must be neutralized before being poured down a drain or must be handled as hazardous waste.

20.3 The CDDs/CDFs decompose above 800 °C. Low-level waste such as absorbent paper, tissues, animal remains, and plastic gloves may be burned in an appropriate incinerator. Gross quantities (milligrams) should be packaged securely and disposed of through commercial or governmental channels that are capable of handling extremely toxic wastes.

20.4 Liquid or soluble waste should be dissolved in methanol or ethanol and irradiated with ultraviolet light with a wavelength shorter than 290 nm for several days. Use F40 BL or equivalent lamps. Analyze liquid wastes, and dispose of the solutions when the CDDs/CDFs can no longer be detected.

20.5 For further information on waste management, consult ''The Waste Management Manual for Laboratory Personnel'' and ''Less is Better—Laboratory Chemical Management for Waste Reduction,'' available from the American Chemical Society's Department of Government Relations and Science Policy, 1155 16th Street N.W., Washington, D.C. 20036.

21.0 Method Performance

Method performance was validated and performance specifications were developed using data from EPA's international interlaboratory validation study (References 30–31) and the EPA/paper industry Long-Term Variability Study of discharges from the pulp and paper industry (58 FR 66078).

22.0 References

1. Tondeur, Yves. ''Method 8290: Analytical Procedures and Quality Assurance for Multimedia Analysis of Polychlorinated Dibenzo-*p*-dioxins and Dibenzofurans by High Resolution Gas Chromatography/High Resolution Mass Spectrometry,'' USEPA EMSL, Las Vegas, Nevada, June 1987.

2. ''Measurement of 2,3,7,8-Tetrachlorinated Dibenzo-*p*-dioxin (TCDD) and 2,3,7,8-Tetrachlorinated Dibenzofuran (TCDF) in Pulp, Sludges, Process Samples and Wastewaters from Pulp and Paper Mills,'' Wright State University, Dayton, OH 45435, June 1988.

3. ''NCASI Procedures for the Preparation and Isomer Specific Analysis of Pulp and Paper Industry Samples for 2,3,7,8-TCDD and 2,3,7,8-TCDF,'' National Council of the Paper Industry for Air and Stream Improvement Inc., 260 Madison Avenue, New York, NY 10016, Technical Bulletin No. 551, Pre-Release Copy, July 1988.

4. ''Analytical Procedures and Quality Assurance Plan for the Determination of PCDD/PCDF in Fish,'' USEPA, Environmental Research Laboratory, 6201 Congdon Boulevard, Duluth, MN 55804, April 1988.

5. Tondeur, Yves. ''Proposed GC/MS Methodology for the Analysis of PCDDs and

PCDFs in Special Analytical Services Samples,'' Triangle Laboratories, Inc., 801–10 Capitola Dr, Research Triangle Park, NC 27713, January 1988; updated by personal communication September 1988.

6. Lamparski, L.L. and Nestrick, T.J. ''Determination of Tetra-, Hexa-, Hepta-, and Octachlorodibenzo-*p*-dioxin Isomers in Particulate Samples at Parts per Trillion Levels,'' Analytical Chemistry, 52: 2045–2054, 1980.

7. Lamparski, L.L. and Nestrick, T.J. ''Novel Extraction Device for the Determination of Chlorinated Dibenzo-*p*-dioxins (PCDDs) and Dibenzofurans (PCDFs) in Matrices Containing Water,'' Chemosphere, 19:27–31, 1989.

8. Patterson, D.G., et. al. ''Control of Interferences in the Analysis of Human Adipose Tissue for 2,3,7,8-Tetrachlorodibenzo-*p*-dioxin,'' Environmental Toxicological Chemistry, 5:355–360, 1986.

9. Stanley, John S. and Sack, Thomas M. ''Protocol for the Analysis of 2,3,7,8-Tetrachlorodibenzo-*p*-dioxin by High Resolution Gas Chromatography/High Resolution Mass Spectrometry,'' USEPA EMSL, Las Vegas, Nevada 89114, EPA 600/4–86–004, January 1986.

10. ''Working with Carcinogens,'' Department of Health, Education, & Welfare, Public Health Service, Centers for Disease Control, NIOSH, Publication 77–206, August 1977, NTIS PB–277256.

11. ''OSHA Safety and Health Standards, General Industry,'' OSHA 2206, 29 CFR 1910.

12. ''Safety in Academic Chemistry Laboratories,'' ACS Committee on Chemical Safety, 1979.

13. ''Standard Methods for the Examination of Water and Wastewater,'' 18th edition and later revisions, American Public Health Association, 1015 15th St, N.W., Washington, DC 20005, 1–35: Section 1090 (Safety), 1992.

14. ''Method 613—2,3,7,8-Tetrachlorodibenzo-p-dioxin,'' 40 CFR 136 (49 FR 43234), October 26, 1984, Section 4.1.

15. Provost, L.P. and Elder, R.S. ''Interpretation of Percent Recovery Data,'' American Laboratory, 15: 56–83, 1983.

16. ''Standard Practice for Sampling Water,'' ASTM Annual Book of Standards, ASTM, 1916 Race Street, Philadelphia, PA 19103–1187, 1980.

17. ''Methods 330.4 and 330.5 for Total Residual Chlorine,'' USEPA, EMSL, Cincinnati, OH 45268, EPA 600/4–79–020, March 1979.

18. ''Handbook of Analytical Quality Control in Water and Wastewater Laboratories,'' USEPA EMSL, Cincinnati, OH 45268, EPA–600/4–79–019, March 1979.

19. Williams, Rick. Letter to Bill Telliard, June 4, 1993, available from the EPA Sample Control Center operated by DynCorp Viar, Inc., 300 N Lee St, Alexandria, VA 22314, 703–519–1140.

20. Barkowski, Sarah. Fax to Sue Price, August 6, 1992, available from the EPA Sample Control Center operated by DynCorp Viar, Inc., 300 N Lee St, Alexandria VA 22314, 703–519–1140.

21. ''Analysis of Multi-media, Multi-concentration Samples for Dioxins and Furans, PCDD/PCDF Analyses Data Package'', Narrative for Episode 4419, MRI Project No. 3091-A, op.cit. February 12, 1993, Available from the EPA Sample Control Center operated by DynCorp Viar Inc, 300 N Lee St, Alexandria, VA 22314 (703–519–1140).

22. ''Analytical Procedures and Quality Assurance Plan for the Determination of PCDD/PCDF in Fish'', U.S. Environmental Protection Agency, Environmental Research Laboratory, Duluth, MN 55804, EPA/600/3–90/022, March 1990.

23. Afghan, B.K., Carron, J., Goulden, P.D., Lawrence, J., Leger, D., Onuska, F., Sherry, J., and Wilkenson, R.J., ''Recent Advances in Ultratrace Analysis of Dioxins and Related Halogenated Hydrocarbons'', Can J. Chem., 65: 1086–1097, 1987.

24. Sherry, J.P. and Tse, H. ''A Procedure for the Determination of Polychlorinated Dibenzo-p-dioxins in Fish'', Chemosphere, 20: 865–872, 1990.

25. ''Preliminary Fish Tissue Study'', Results of Episode 4419, available from the EPA Sample Control Center operated by DynCorp Viar, Inc., 300 N Lee St, Alexandria, VA 22314, 703–519–1140.

26. Nestrick, Terry L. DOW Chemical Co., personal communication with D.R. Rushneck, April 8, 1993. Details available from the U.S. Environmental Protection Agency Sample Control Center operated by DynCorp Viar Inc, 300 N Lee St, Alexandria, VA 22314, 703–519–1140.

27. Barnstadt, Michael. ''Big Fish Column'', Triangle Laboratories of RTP, Inc., SOP 129–90, 27 March 27, 1992.

28. ''Determination of Polychlorinated Dibenzo-p-Dioxins (PCDD) and Dibenzofurans (PCDF) in Environmental Samples Using EPA Method 1613'', Chemical Sciences Department, Midwest Research Institute, 425 Volker Boulevard, Kansas City, MO 44110–2299, Standard Operating Procedure No. CS–153, January 15, 1992.

29. Ryan, John J. Raymonde Lizotte and William H. Newsome, J. Chromatog. 303 (1984) 351-360.

30. Telliard, William A., McCarty, Harry B., and Riddick, Lynn S. ''Results of the Interlaboratory Validation Study of USEPA Method 1613 for the Analysis of Tetra- through Octachlorinated Dioxins and Furans by Isotope Dilution GC/MS,'' Chemosphere, 27, 41–46 (1993).

31. ''Results of the International Interlaboratory Validation Study of USEPA Method 1613'', October 1994, available from the EPA Sample Control Center operated by DynCorp

Viar, Inc., 300 N Lee St, Alexandria, VA 22314, 703–519–1140.

23.0 *Tables and Figures*

TABLE 1—CHLORINATED DIBENZO-P-DIOXINS AND FURANS DETERMINED BY ISOTOPE DILUTION AND INTERNAL STANDARD HIGH RESOLUTION GAS CHROMATOGRAPHY (HRGC)/HIGH RESOLUTION MASS SPECTROMETRY (HRMS)

CDDs/CDFs[1]	CAS registry	Labeled analog	CAS registry
2,3,7,8-TCDD	1746–01–6	$^{13}C_{12}$-2,3,7,8-TCDD $^{37}Cl_4$-2,3,7,8-TCDD	76523–40–5 85508–50–5
Total TCDD	41903–57–5		
2,3,7,8-TCDF	51207–31–9	$^{13}C_{12}$-2,3,7,8-TCDF	89059–46–1
Total-TCDF	55722–27–5		
1,2,3,7,8-PeCDD	40321–76–4	$^{13}C_{12}$-1,2,3,7,8-PeCDD	109719–79–1
Total-PeCDD	36088–22–9		
1,2,3,7,8-PeCDF	57117–41–6	$^{13}C_{12}$-1,2,3,7,8-PeCDF	109719–77–9
2,3,4,7,8-PeCDF	57117–31–4	$^{13}C_{12}$-2,3,4,7,8-PeCDF	116843–02–8
Total-PeCDF	30402–15–4		
1,2,3,4,7,8-HxCDD	39227–28–6	$^{13}C_{12}$-1,2,3,4,7,8-HxCDD	109719–80–4
1,2,3,6,7,8-HxCDD	57653–85–7	$^{13}C_{12}$-1,2,3,6,7,8-HxCDD	109719–81–5
1,2,3,7,8,9-HxCDD	19408–74–3	$^{13}C_{12}$-1,2,3,7,8,9-HxCDD	109719–82–6
Total-HxCDD	34465–46–8		
1,2,3,4,7,8-HxCDF	70648–26–9	$^{13}C_{12}$-1,2,3,4,7,8-HxCDF	114423–98–2
1,2,3,6,7,8-HxCDF	57117–44–9	$^{13}C_{12}$-1,2,3,6,7,8-HxCDF	116843–03–9
1,2,3,7,8,9-HxCDF	72918–21–9	$^{13}C_{12}$-1,2,3,7,8,9-HxCDF	116843–04–0
2,3,4,6,7,8-HxCDF	60851–34–5	$^{13}C_{12}$-2,3,4,6,7,8-HxCDF	116843–05–1
Total-HxCDF	55684–94–1		
1,2,3,4,6,7,8-HpCDD	35822–46–9	$^{13}C_{12}$-1,2,3,4,6,7,8-HpCDD	109719–83–7
Total-HpCDD	37871–00–4		
1,2,3,4,6,7,8-HpCDF	67562–39–4	$^{13}C_{12}$-1,2,3,4,6,7,8-HpCDF	109719–84–8
1,2,3,4,7,8,9-HpCDF	55673–89–7	$^{13}C_{12}$-1,2,3,4,7,8,9-HpCDF	109719–94–0
Total-HpCDF	38998–75–3		
OCDD	3268–87–9	$^{13}C_{12}$-OCDD	114423–97–1
OCDF	39001–02–0	Not used.	

[1] Chlorinated dibenzo-p-dioxins and chlorinated dibenzofurans.
TCDD = Tetrachlorodibenzo-p-dioxin.
TCDF = Tetrachlorodibenzofuran.
PeCDD = Pentachlorodibenzo-p-dioxin.
PeCDF = Pentachlorodibenzofuran.
HxCDD = Hexachlorodibenzo-p-dioxin.
HxCDF = Hexachlorodibenzofuran.
HpCDD = Heptachlorodibenzo-p-dioxin.
HpCDF = Heptachlorodibenzofuran.
OCDD = Octachlorodibenzo-p-dioxin.
OCDF = Octachlorodibenzofuran.

TABLE 2—RETENTION TIME REFERENCES, QUANTITATION REFERENCES, RELATIVE RETENTION TIMES, AND MINIMUM LEVELS FOR CDDS AND DCFS

CDD/CDF	Retention time and quantitation reference	Relative retention time	Minimum level[1]		
			Water (pg/L; ppq)	Solid (ng/kg; ppt)	Extract (pg/µL; ppb)
Compounds using ^{13}C12–1,2,3,4-TCDD as the Injection Internal Standard					
2,3,7,8-TCDF	$^{13}C_{12}$-2,3,7,8-TCDF	0.999–1.003	10	1	0.5
2,3,7,8-TCDD	$^{13}C_{12}$-2,3,7,8-TCDD	0.999–1.002	10	1	0.5
1,2,3,7,8-Pe	$^{13}C_{12}$-1,2,3,7,8-PeCDF	0.999–1.002	50	5	2.5
2,3,4,7,8-PeCDF	$^{13}C_{12}$-2,3,4,7,8-PeCDF	0.999–1.002	50	5	2.5
1,2,3,7,8-PeCDD	$^{13}C_{12}$-1,2,3,7,8-PeCDD	0.999–1.002	50	5	2.5
$^{13}C_{12}$-2,3,7,8-TCDF	$^{13}C_{12}$-1,2,3,4-TCDD	0.923–1.103	....	....	....
$^{13}C_{12}$-2,3,7,8-TCDD	$^{13}C_{12}$-1,2,3,4-TCDD	0.976–1.043	....	....	....
$^{13}C_{12}$-2,3,7,8-TCDD	$^{13}C_{12}$-1,2,3,4-TCDD	0.989–1.052	....	....	....
$^{13}C_{12}$-1,2,3,7,8-PeCDF	$^{13}C_{12}$-1,2,3,4-TCDD	1.000–1.425	....	....	....
$^{13}C_{12}$-2,3,4,7,8-PeCDF	$^{13}C_{12}$-1,2,3,4-TCDD	1.001–1.526	....	....	....
$^{13}C_{12}$-1,2,3,7,8-PeCDF	$^{13}C_{12}$-1,2,3,4-TCDD	1.000–1.567	....	....	....
Compounds using ^{13}C12–1,2,3,7,8,9-HxCDD as the Injection Internal Standard					
1,2,3,4,7,8-HxCDF	$^{13}C_{12}$-1,2,3,4,7,8-HxCDF	0.999–1.001	50	5	2.5
1,2,3,6,7,8-HxCDF	$^{13}C_{12}$-1,2,3,6,7,8-HxCDF	0.997–1.005	50	5	2.5
1,2,3,7,8,9-HxCDF	$^{13}C_{12}$-1,2,3,7,8,9-HxCDF	0.999–1.001	50	5	2.5
2,3,4,6,7,8-HxCDF	$^{13}C_{12}$-2,3,4,6,7,8-HxCDF	0.999–1.001	50	5	2.5
1,2,3,4,7,8-HxCDD	$^{13}C_{12}$-1,2,3,4,7,8-HxCDD	0.999–1.001	50	5	2.5

TABLE 2—RETENTION TIME REFERENCES, QUANTITATION REFERENCES, RELATIVE RETENTION TIMES, AND MINIMUM LEVELS FOR CDDS AND DCFS—Continued

CDD/CDF	Retention time and quantitation reference	Relative retention time	Minimum level[1]		
			Water (pg/L; ppq)	Solid (ng/kg; ppt)	Extract (pg/µL; ppb)
1,2,3,6,7,8-HxCDD	$^{13}C_{12}$-1,2,3,6,7,8-HxCDD	0.998–1.004	50	5	2.5
1,2,3,7,8,9-HxCDD	(2)	1.000–1.019	50	5	2.5
1,2,3,4,6,7,8-HpCDF	$^{13}C_{12}$-1,2,3,4,6,7,8-HpCDF	0.999–1.001	50	5	2.5
1,2,3,4,7,8,9-HpCDF	$^{13}C_{12}$-1,2,3,4,7,8,9-HpCDF	0.999–1.001	50	5	2.5
1,2,3,4,6,7,8-HpCDD	$^{13}C_{12}$-1,2,3,4,6,7,8-HpCDD	0.999–1.001	50	5	2.5
OCDF	$^{13}C_{12}$-OCDD	0.999–1.001	100	10	5.0
OCDD	$^{13}C_{12}$-OCDD	0.999–1.001	100	10	5.0
1,2,3,4,6,7,8,-HxCDF	$^{13}C_{12}$-1,2,3,7,8,9-HpCDD	0.949–0.975			
$^{13}C_{12}$1,2,3,7,8,9-HxCDF	$^{13}C_{12}$-1,2,3,7,8,9-HpCDD	0.977–1.047			
$^{13}C_{12}$2,3,4,6,7,8,-HxCDF	$^{13}C_{12}$-1,2,3,7,8,9-HpCDD	0.959–1.021			
$^{13}C_{12}$1,2,3,4,7,8,-HxCDF	$^{13}C_{12}$-1,2,3,7,8,9-HpCDD	0.977–1.000			
$^{13}C_{12}$1,2,3,6,7,8,-HxCDF	$^{13}C_{12}$-1,2,3,7,8,9-HpCDD	0.981–1.003			
$^{13}C_{12}$1,2,3,4,6,7,8-HxCDF	$^{13}C_{12}$-1,2,3,7,8,9-HpCDD	1.043–1.085			
$^{13}C_{12}$1,2,3,4,7,8,9-HxCDF	$^{13}C_{12}$-1,2,3,7,8,9-HpCDD	1.057–1.151			
$^{13}C_{12}$1,2,3,4,6,7,8-HxCDF	$^{13}C_{12}$-1,2,3,7,8,9-HpCDD	1.086–1.110			
$^{13}C_{12}$OCDD	$^{13}C_{12}$-1,2,3,7,8,9-HpCDD	1.032–1.311			

[1] The Minimum Level (ML) for each analyte is defined as the level at which the entire analytical system must give a recognizable signal and acceptable calibration point. It is equivalent to the concentration of the lowest calibration standard, assuming that all method-specified sample weights, volumes, and cleanup procedures have been employed.

[2] The retention time reference for 1,2,3,7,8,9-HxCDD is $^{13}C_{12}$-1,2,3,6,7,8-HxCDD, and 1,2,3,7,8,9-HxCDD is quantified using the averaged responses for $^{13}C_{12}$-1,2,3,4,7,8-HxCDD and $^{13}C_{12}$-1,2,3,6,7,8-HxCDD.

TABLE 3—CONCENTRATION OF STOCK AND SPIKING SOLUTIONS CONTAINING CDDS/CDFS AND LABELED COMPOUNDS

CDD/CDF	Labeled compound stock solution[1] (ng/mL)	Labeled compound spiking solution[2] (ng/mL)	PAR stock solution[3] (ng/mL)	PAR spiking solution[4] (ng/mL)
2,3,7,8-TCDD			40	0.8
2,3,7,8-TCDF			40	0.8
1,2,3,7,8-PeCDD			200	4
1,2,3,7,8-PeCDF			200	4
2,3,4,7,8-PeCDF			200	4
1,2,3,4,7,8-HxCDD			200	4
1,2,3,6,7,8-HxCDD			200	4
1,2,3,7,8,9-HxCDD			200	4
1,2,3,4,7,8-HxCDF			200	4
1,2,3,6,7,8-HxCDF			200	4
1,2,3,7,8,9-HxCDF			200	4
2,3,4,6,7,8-HxCDF			200	4
1,2,3,4,6,7,8-HpCDD			200	4
1,2,3,4,6,7,8-HpCDF			200	4
1,2,3,4,7,8,9-HpCDF			200	4
OCDD			400	8
OCDF			400	8
$^{13}C_{12}$-2,3,7,8-TCDD	100	2		
$^{13}C_{12}$-2,3,7,8-TCDF	100	2		
$^{13}C_{12}$-1,2,3,7,8-PeCDD	100	2		
$^{13}C_{12}$-1,2,3,7,8-PeCDF	100	2		
$^{13}C_{12}$-2,3,4,7,8-PeCDF	100	2		
$^{13}C_{12}$-1,2,3,4,7,8-HxCDD	100	2		
$^{13}C_{12}$-1,2,3,6,7,8-HxCDD	100	2		
$^{13}C_{12}$-1,2,3,4,7,8-HxCDF	100	2		
$^{13}C_{12}$-1,2,3,6,7,8-HxCDF	100	2		
$^{13}C_{12}$-1,2,3,7,8,9-HxCDF	100	2		
$^{13}C_{12}$-2,3,4,6,7,8-HxCDF	100	2		
$^{13}C_{12}$-1,2,3,4,6,7,8-HpCDD	100	2		
$^{13}C_{12}$-1,2,3,4,6,7,8-HpCDF	100	2		
$^{13}C_{12}$-1,2,3,4,7,8,9-HpCDF	100	2		
$^{13}C_{12}$-OCDD	200	4		
Cleanup Standard[5]				
$^{37}Cl_4$-2,3,7,8-TCDD	0.8			
Internal Standards[6]				
$^{13}C_{12}$-1,2,3,4-TCDD	200			

TABLE 3—CONCENTRATION OF STOCK AND SPIKING SOLUTIONS CONTAINING CDDS/CDFS AND LABELED COMPOUNDS—Continued

CDD/CDF	Labeled compound stock solution[1] (ng/mL)	Labeled compound spiking solution[2] (ng/mL)	PAR stock solution[3] (ng/mL)	PAR spiking solution[4] (ng/mL)
$^{13}C_{12}$-1,2,3,7,8,9-HxCDD	200	....	....	....

[1] Section 7.10—prepared in nonane and diluted to prepare spiking solution.
[2] Section 7.10.3—prepared in acetone from stock solution daily.
[3] Section 7.9—prepared in nonane and diluted to prepare spiking solution.
[4] Section 7.14—prepared in acetone from stock solution daily.
[5] Section 7.11—prepared in nonane and added to extract prior to cleanup.
[6] Section 7.12—prepared in nonane and added to the concentrated extract immediately prior to injection into the GC (Section 14.2).

TABLE 4—CONCENTRATION OF CDDS/CDFS IN CALIBRATION AND CALIBRATION VERIFICATION SOLUTIONS[1] (SECTION 15.3)

	CDD/CDF	CS2 (ng/mL)	CS3 (ng/mL)	CS4 (ng/mL)	CS5 (ng/mL)
2,3,7,8-TCDD	0.5	2	10	40	200
2,3,7,8-TCDF	0.5	2	10	40	200
1,2,3,7,8-PeCDD	2.5	10	50	200	1000
1,2,3,7,8-PeCDF	2.5	10	50	200	1000
2,3,4,7,8-PeCDF	2.5	10	50	200	1000
1,2,3,4,7,8-HxCDD	2.5	10	50	200	1000
1,2,3,6,7,8-HxCDD	2.5	10	50	200	1000
1,2,3,7,8,9-HxCDD	2.5	10	50	200	1000
1,2,3,4,7,8-HxCDF	2.5	10	50	200	1000
1,2,3,6,7,8-HxCDF	2.5	10	50	200	1000
1,2,3,7,8,9-HxCDF	2.5	10	50	200	1000
2,3,4,6,7,8-HxCDF	2.5	10	50	200	1000
1,2,3,4,6,7,8-HpCDD	2.5	10	50	200	1000
1,2,3,4,6,7,8-HpCDF	2.5	10	50	200	1000
1,2,3,4,7,8,9-HpCDF	2.5	10	50	200	1000
OCDD	5.0	20	100	400	2000
OCDF	5.0	20	100	400	2000
$^{13}C_{12}$-2,3,7,8-TCDD	100	100	100	100	100
$^{13}C_{12}$-2,3,7,8-TCDF	100	100	100	100	100
$^{13}C_{12}$-1,2,3,7,8-PeCDD	100	100	100	100	100
$^{13}C_{12}$-PeCDF	100	100	100	100	100
$^{13}C_{12}$-2,3,4,7,8-PeCDF	100	100	100	100	100
$^{13}C_{12}$-1,2,3,4,7,8-HxCDD	100	100	100	100	100
$^{13}C_{12}$-1,2,3,6,7,8-HxCDD	100	100	100	100	100
$^{13}C_{12}$-1,2,3,4,7,8-HxCDF	100	100	100	100	100
$^{13}C_{12}$-1,2,3,6,7,8-HxCDF	100	100	100	100	100
$^{13}C_{12}$-1,2,3,7,8,9-HxCDF	100	100	100	100	100
$^{13}C_{12}$-1,2,3,4,6,7,8-HpCDD	100	100	100	100	100
$^{13}C_{12}$-1,2,3,4,6,7,8-HpCDF	100	100	100	100	100
$^{13}C_{12}$-1,2,3,4,7,8,9-Hp CDF	100	100	100	100	100
$^{13}C_{12}$-OCDD	200	200	200	200	200
Cleanup Standard:					
$^{37}C_{14}$-2,3,7,8-TCDD	0.5	2	10	40	200
Internal Standards:					
$^{13}C_{12}$-1,2,3,4-TCDD	100	100	100	100	100
$^{13}C_{12}$-1,2,3,7,8,9-HxCDD	100	100	100	100	100

TABLE 5—GC RETENTION TIME WINDOW DEFINING SOLUTION AND ISOMER SPECIFICITY TEST STANDARD (SECTION 7.15)

DB–5 column GC retention-time window defining solution		
CDD/CDF	First eluted	Last eluted
TCDF	1,3,6,8-	1,2,8,9-
TCDD	1,3,6,8-	1,2,8,9-
PeCDF	1,3,4,6,8-	1,2,3,8,9-
PeCDD	1,2,4,7,9-	1,2,3,8,9-
HxCDF	1,2,3,4,6,8-	1,2,3,4,8,9-
HxCDD	1,2,4,6,7,9-	1,2,3,4,6,7-
HpCDF	1,2,3,4,6,7,8-	1,2,3,4,7,8,9-

TABLE 5—GC RETENTION TIME WINDOW DEFINING SOLUTION AND ISOMER SPECIFICITY TEST STANDARD (SECTION 7.15)—Continued

DB–5 column GC retention-time window defining solution		
CDD/CDF	First eluted	Last eluted
HpCDD	1,2,3,4,6,7,9-	1,2,3,4,6,7,8-

DB–5 Column TCDD Specificity Test Standard

1,2,3,7=1,2,3,8-TCDD
2,3,7,8-TCDD
1,2,3,9-TCDD

DB–225 Column TCDF Isomer Specificity Test Standard

2,3,4,7-TCDF
2,3,7,8-TCDF
1,2,3,9-TCDF

TABLE 6—ACCEPTANCE CRITERIA FOR PERFORMANCE TESTS WHEN ALL CDDS/CDFS ARE TESTED[1]

CDD/CDF	Test conc. (ng/mL)	IPR[2,3]		OPR (ng/mL)	VER (ng/mL)
		s (ng/mL)	X (ng/mL)		
2,3,7,8-TCDD	10	2.8	8.3–12.9	6.7–15.8	7.8–12.9
2,3,7,8-TCDF	10	2.0	8.7–13.7	7.5–15.8	8.4–12.0
1,2,3,7,8-PeCDD	50	7.5	38–66	35–71	39–65
1,2,3,7,8-PeCDF	50	7.5	43–62	40–67	41–60
2,3,4,7,8-PeCDF	50	8.6	36–75	34–80	41–61
1,2,3,4,7,8-HxCDD	50	9.4	39–76	35–82	39–64
1,2,3,6,7,8-HxCDD	50	7.7	42–62	38–67	39–64
1,2,3,7,8,9-HxCDD	50	11.1	37–71	32–81	41–61
1,2,3,4,7,8-HxCDF	50	8.7	41–59	36–67	45–56
1,2,3,6,7,8-HxCDF	50	6.7	46–60	42–65	44–57
1,2,3,7,8,9-HxCDF	50	6.4	42–61	39–65	45–56
2,3,4,6,7,8-HxCDF	50	7.4	37–74	35–78	44–57
1,2,3,4,6,7,8-HpCDD	50	7.7	38–65	35–70	43–58
1,2,3,4,6,7,8-HpCDF	50	6.3	45–56	41–61	45–55
1,2,3,4,7,8,9-HpCDF	50	8.1	43–63	39–69	43–58
OCDD	100	19	89–127	78–144	79–126
OCDF	100	27	74–146	63–170	63–159
$^{13}C_{12}$-2,3,7,8-TCDD	100	37	28–134	20–175	82–121
$^{13}C_{12}$-2,3,7,8-TCDF	100	35	31–113	22–152	71–140
$^{13}C_{12}$-1,2,3,7,8-PeCDD	100	39	27–184	21–227	62–160
$^{13}C_{12}$-1,2,3,7,8-PeCDF	100	34	27–156	21–192	76–130
$^{13}C_{12}$-2,3,4,7,8-PeCDF	100	38	16–279	13–328	77–130
$^{13}C_{12}$-1,2,3,4,7,8-HxCDD	100	41	29–147	21–193	85–117
$^{13}C_{12}$-1,2,3,6,7,8-HxCDD	100	38	34–122	25–163	85–118
$^{13}C_{12}$-1,2,3,4,7,8-HxCDF	100	43	27–152	19–202	76–131
$^{13}C_{12}$-1,2,3,6,7,8-HxCDF	100	35	30–122	21–159	70–143
$^{13}C_{12}$-1,2,3,7,8,9-HxCDF	100	40	24–157	17–205	74–135
$^{13}C_{12}$-2,3,4,6,7,8,-HxCDF	100	37	29–136	22–176	73–137
$^{13}C_{12}$-1,2,3,4,6,7,8-HpCDD	100	35	34–129	26–166	72–138
$^{13}C_{12}$-1,2,3,4,6,7,8-HpCDF	100	41	32–110	21–158	78–129
$^{13}C_{12}$-1,2,3,4,7,8,9-HpCDF	100	40	28–141	20–186	77–129
$^{13}C_{12}$-OCDD	200	95	41–276	26–397	96–415
$^{37}Cl_4$-2,3,7,8-TCDD	10	3.6	3.9–15.4	3.1–19.1	7.9–12.7

[1] All specifications are given as concentration in the final extract, assuming a 20 μL volume.
[2] s = standard deviation of the concentration.
[3] X = average concentration.

TABLE 6A—ACCEPTANCE CRITERIA FOR PERFORMANCE TESTS WHEN ONLY TETRA COMPOUNDS ARE TESTED[1]

CDD/CDF	Test Conc. (ng/mL)	IPR[2,3]		OPR (ng/mL)	VER (ng/mL)
		s (ng/mL)	X (ng/mL)		
2,3,7,8-TCDD	10	2.7	8.7–12.4	7.314.6	8.2–12.3
2,3,7,8-TCDF	10	2.0	9.1–13.1	8.0–14.7	8.6–11.6
$^{13}C_{12}$-2,3,7,8-TCDD	100	35	32–115	25–141	85–117
$^{13}C_{12}$-2,3,7,8-TCDF	100	34	35–99	26–126	76–131

TABLE 6A—ACCEPTANCE CRITERIA FOR PERFORMANCE TESTS WHEN ONLY TETRA COMPOUNDS ARE TESTED[1]—Continued

CDD/CDF	Test Conc. (ng/mL)	IPR[2,3]		OPR (ng/mL)	VER (ng/mL)
		s (ng/mL)	X (ng/mL)		
$^{37}C_{14}$-2,3,7,8-TCDD	10	3.4	4.5–13.4	3.7–15.8	8.3–12.1

[1] All specifications are given as concentration in the final extract, assuming a 20 μL volume.
[2] s = standard deviation of the concentration.
[3] X = average concentration.

TABLE 7—LABELED COMPOUNDS RECOVERY IN SAMPLES WHEN ALL CDDS/CDFS ARE TESTED

Compound	Test conc. (ng/mL)	Labeled compound recovery	
		(ng/mL)[1]	(%)
$^{13}C_{12}$-2,3,7,8-TCDD	100	25–164	25–164
$^{13}C_{12}$-2,3,7,8-TCDF	100	24–169	24–169
$^{13}C_{12}$-1,2,3,7,8-PeCDD	100	25–181	25–181
$^{13}C_{12}$-1,2,3,7,8-PeCDF	100	24–185	24–185
$^{13}C_{12}$-2,3,4,7,8-PeCDF	100	21–178	21–178
$^{13}C_{12}$-1,2,3,4,7,8-HxCDD	100	32–141	32–141
$^{13}C_{12}$-1,2,3,6,7,8-HxCDD	100	28–130	28–130
$^{13}C_{12}$-1,2,3,4,7,8-HxCDF	100	26–152	26–152
$^{13}C_{12}$-1,2,3,6,7,8-HxCDF	100	26–123	26–123
$^{13}C_{12}$-1,2,3,7,8,9-HxCDF	100	29–147	29–147
$^{13}C_{12}$-2,3,4,6,7,8-HxCDF	100	28–136	28–136
$^{13}C_{12}$-1,2,3,4,6,7,8-HpCDD	100	23–140	23–140
$^{13}C_{12}$-1,2,3,4,6,7,8-HpCDF	100	28–143	28–143
$^{13}C_{12}$-1,2,3,4,7,8,9-HpCDF	100	26–138	26–138
$^{13}C_{12}$-OCDD	200	34-313	17–157
$^{37}Cl_4$-2,3,7,8-TCDD	10	3.5–19.7	35–197

[1] Specification given as concentration in the final extract, assuming a 20-μL volume.

TABLE 7A—LABELED COMPOUND RECOVERY IN SAMPLES WHEN ONLY TETRA COMPOUNDS ARE TESTED

Compound	Test conc. (ng/mL)	Labeled compound recovery	
		(ng/mL)[1]	(%)
$^{13}C_{12}$-2,3,7,8-TCDD	100	31–137	31–137
$^{13}C_{12}$-2,3,7,8-TCDF	100	29–140	29–140
$^{37}Cl_4$-2,3,7,8-TCDD	10	4.2–16.4	42–164

[1] Specification given as concentration in the final extract, assuming a 20 μL volume.

TABLE 8—DESCRIPTORS, EXACT M/Z'S, M/Z TYPES, AND ELEMENTAL COMPOSITIONS OF THE CDDS AND CDFS

Descriptor	Exact M/Z[1]	M/Z type	Elemental composition	Substance[2]
1	292.9825	Lock	C_7F_{11}	PFK
	303.9016	M	$C_{12}H_4{}^{35}Cl_4O$	TCDF
	305.8987	M=2	$C_{12}H_4{}^{35}Cl_3{}^{37}ClO$	TCDF
	315.9419	M	$^{13}C_{12}H_4{}^{35}Cl_4O$	TCDF[3]
	317.9389	M=2	$^{13}C_{12}H_4{}^{35}Cl_3{}^{37}ClO$	TCDF[3]
	319.8965	M	$C_{12}H_4{}^{35}Cl_4O_2$	TCDD
	321.8936	M=2	$C_{12}H_4{}^{35}Cl_3{}^{37}ClO_2$	TCDD
	327.8847	M	$C_{12}H_4{}^{37}Cl_4O_2$	TCDD[4]
	330.9792	QC	C_7F_{13}	PFK
	331.9368	M	$^{13}C_{12}H_4{}^{35}Cl_4O_2$	TCDD[3]
	333.9339	M=2	$^{13}C_{12}H_4{}^{35}Cl_3{}^{37}ClO_2$	TCDD[3]
	375.8364	M=2	$C_{12}H_4{}^{35}Cl_5{}^{37}ClO$	HxCDPE
2	339.8597	M=2	$C_{12}H_3{}^{35}Cl_4{}^{37}ClO$	PeCDF
	341.8567	M=4	$C_{12}H_3{}^{35}Cl_3{}^{37}Cl_2O$	PeCDF
	351.9000	M=2	$^{13}C_{12}H_3{}^{35}Cl_4{}^{37}ClO$	PeCDF
	353.8970	M=4	$^{13}C_{12}H_3{}^{35}Cl_3{}^{37}Cl_2O$	PeCDF[3]
	354.9792	Lock	C_9F_{13}	PFK
	355.8546	M=2	$C_{12}H_3{}^{35}Cl_4{}^{37}ClO_2$	PeCDD
	357.8516	M=4	$C_{12}H_3{}^{35}Cl_3{}^{37}Cl_2O_2$	PeCDD

TABLE 8—DESCRIPTORS, EXACT M/Z'S, M/Z TYPES, AND ELEMENTAL COMPOSITIONS OF THE CDDS AND CDFS—Continued

Descriptor	Exact M/Z[1]	M/Z type	Elemental composition	Substance[2]
	367.8949	M=2	$^{13}C_{12}H_3{}^{35}Cl_4{}^{37}ClO_2$	PeCDD[3]
	369.8919	M=4	$^{13}C_{12}H_3{}^{35}Cl_3{}^{37}Cl_2O_2$	PeCDD[3]
	409.7974	M=2	$C_{12}H_3{}^{35}Cl_6{}^{37}ClO$	HpCDPE
3	373.8208	M=2	$C_{12}H_2{}^{35}Cl_5{}^{37}ClO$	HxCDF
	375.8178	M=4	$C_{12}H_2{}^{35}Cl_4{}^{37}Cl_2O$	HxCDF
	383.8639	M	$^{13}C_{12}H_2{}^{35}Cl_6O$	HxCDF[3]
	385.8610	M=2	$^{13}C_{12}H_2{}^{35}Cl_5{}^{37}ClO$	HxCDF[3]
	389.8157	M=2	$C_{12}H_2{}^{35}Cl_5{}^{37}ClO_2$	HxCDD
	391.8127	M=4	$C_{12}H_2{}^{35}Cl_4{}^{37}Cl_2O_2$	HxCDD
	392.9760	Lock	C_9F_{15}	PFK
	401.8559	M=2	$^{13}C_{12}H_2{}^{35}Cl_5{}^{37}ClO_2$	HxCDD[3]
	403.8529	M=4	$^{13}C_{12}H_2{}^{35}Cl_4{}^{37}Cl_2O_2$	HxCDD[3]
	430.9729	QC	C_9F_{17}	PFK
	445.7555	M=4	$C_{12}H_2{}^{35}Cl_6{}^{37}Cl_2O$	OCDPE
4	407.7818	M=2	$C_{12}H^{35}Cl_6{}^{37}ClO$	HpCDF
	409.7789	M=4	$C_{12}H^{35}Cl_5{}^{37}Cl_2O$	HpCDF
	417.8253	M	$^{13}C_{12}H^{35}Cl_7O$	HpCDF[3]
	419.8220	M=2	$^{13}C_{12}H^{35}Cl_6{}^{37}ClO$	HpCDF[3]
	423.7766	M=2	$C_{12}H^{35}Cl_6{}^{37}ClO_2$	HpCDD
	425.7737	M=4	$C_{12}H^{35}Cl_5{}^{37}Cl_2O_2$	HpCDD
	430.9729	Lock	C_9F_{17}	PFK
	435.8169	M=2	$^{13}C_{12}H^{35}Cl_6{}^{37}ClO_2$	HpCDD[3]
	437.8140	M=4	$^{13}C_{12}H^{35}Cl_5{}^{37}Cl_2O_2$	HpCDD[3]
	479.7165	M=4	$C_{12}H^{35}Cl_7{}^{37}Cl_2O$	NCDPE
5	441.7428	M=2	$C_{12}{}^{35}Cl_7{}^{37}ClO$	OCDF
	442.9728	Lock	$C_{10}F_{17}$	PFK
	443.7399	M=4	$C_{12}{}^{35}Cl_6{}^{37}Cl_2O$	OCDF
	457.7377	M=2	$C_{12}{}^{35}Cl_7{}^{37}ClO_2$	OCDD
	459.7348	M=4	$C_{12}{}^{35}Cl_6{}^{37}Cl_2O_2$	OCDD
	469.7779	M=2	$^{13}C_{12}{}^{35}Cl_7{}^{37}ClO_2$	OCDD[3]
	471.7750	M=4	$^{13}C_{12}{}^{35}Cl_6{}^{37}Cl_2O_2$	OCDD[3]
	513.6775	M=4	$C_{12}{}^{35}Cl_8{}^{37}Cl_2O$	DCDPE

[1] Nuclidic masses used:
H = 1.007825.
O = 15.994915.
C = 12.00000.
^{35}Cl = 34.968853.
^{13}C = 13.003355.
^{37}Cl = 36.965903.
F = 18.9984.

[2] TCDD = Tetrachlorodibenzo-p-dioxin.
PeCDD = Pentachlorodibenzo-p-dioxin.
HxCDD = Hexachlorodibenzo-p-dioxin.
HpCDD = Heptachlorodibenzo-p-dioxin.
OCDD = Octachlorodibenzo-p-dioxin.
HxCDPE = Hexachlorodiphenyl ether.
OCDPE = Octachlorodiphenyl ether.
DCDPE = Decachlorodiphenyl ether.
TCDF = Tetrachlorodibenzofuran.
PeCDF = Pentachlorodibenzofuran.
HxCDF = Hexachlorodibenzofuran.
HpCDF = Heptachlorodibenzofuran.
OCDF = Octachlorodibenzofuran.
HpCDPE = Heptachlorodiphenyl ether.
NCDPE = Nonachlorodiphenyl ether.
PFK = Perfluorokerosene.

[3] Labeled compound.

[4] There is only one m/z for $^{37}Cl_4$-2,3,7,8,-TCDD (cleanup standard).

TABLE 9—THEORETICAL ION ABUNDANCE RATIOS AND QC LIMITS

Number of chlorine atoms	M/Z's forming ratio	Theoretical ratio	QC limit[1]	
			Lower	Upper
4[2]	M/(M=2)	0.77	0.65	0.89
5	(M=2)/(M=4)	1.55	1.32	1.78
6	(M=2)/(M=4)	1.24	1.05	1.43
6[3]	M/(M=2)	0.51	0.43	0.59
7	(M=2)/(M=4)	1.05	0.88	1.20
7[4]	M/(M=2)	0.44	0.37	0.51
8	(M=2)/(M=4)	0.89	0.76	1.02

[1] QC limits represent ±15% windows around the theoretical ion abundance ratios.

[2] Does not apply to $^{37}Cl_4$-2,3,7,8-TCDD (cleanup standard).
[3] Used for $^{13}C_{12}$-HxCDF only.
[4] Used for $^{13}C_{12}$-HpCDF only.

TABLE 10—SUGGESTED SAMPLE QUANTITIES TO BE EXTRACTED FOR VARIOUS MATRICES [1]

Sample Matrix [2]	Example	Percent solids	Phase	Quantity extracted
Single-phase:				
Aqueous	Drinking water Groundwater Treated wastewater	<1	(3)	1000 mL.
Solid	Dry soil Compost Ash	>20	Solid	10 g.
Organic	Waste solvent Waste oil Organic polymer	<1	Organic	10 g.
Tissue	Fish Human adipose		Organic	10 g.
Multi-phase:				
Liquid/Solid:				
Aqueous/Solid	Wet soil Untreated effluent. Digested municipal sludge. Filter cake. Paper pulp.	1–30	Solid	10 g.
Organic/solid	Industrial sludge Oily waste	1–100	Both	10 g.
Liquid/Liquid:				
Aqueous/organic	In-process effluent Untreated effluent Drum waste	<1	Organic	10 g.
Aqueous/organic/solid.	Untreated effluent Drum waste	>1	Organic and solid	10 g.

[1] The quantity of sample to be extracted is adjusted to provide 10 g of solids (dry weight). One liter of aqueous samples containing 1% solids will contain 10 g of solids. For aqueous samples containing greater than 1% solids, a lesser volume is used so that 10 g of solids (dry weight) will be extracted.

[2] The sample matrix may be amorphous for some samples. In general, when the CDDs/CDFs are in contact with a multiphase system in which one of the phases is water, they will be preferentially dispersed in or adsorbed on the alternate phase because of their low solubility in water.

[3] Aqueous samples are filtered after spiking with the labeled compounds. The filtrate and the materials trapped on the filter are extracted separately, and the extracts are combined for cleanup and analysis.

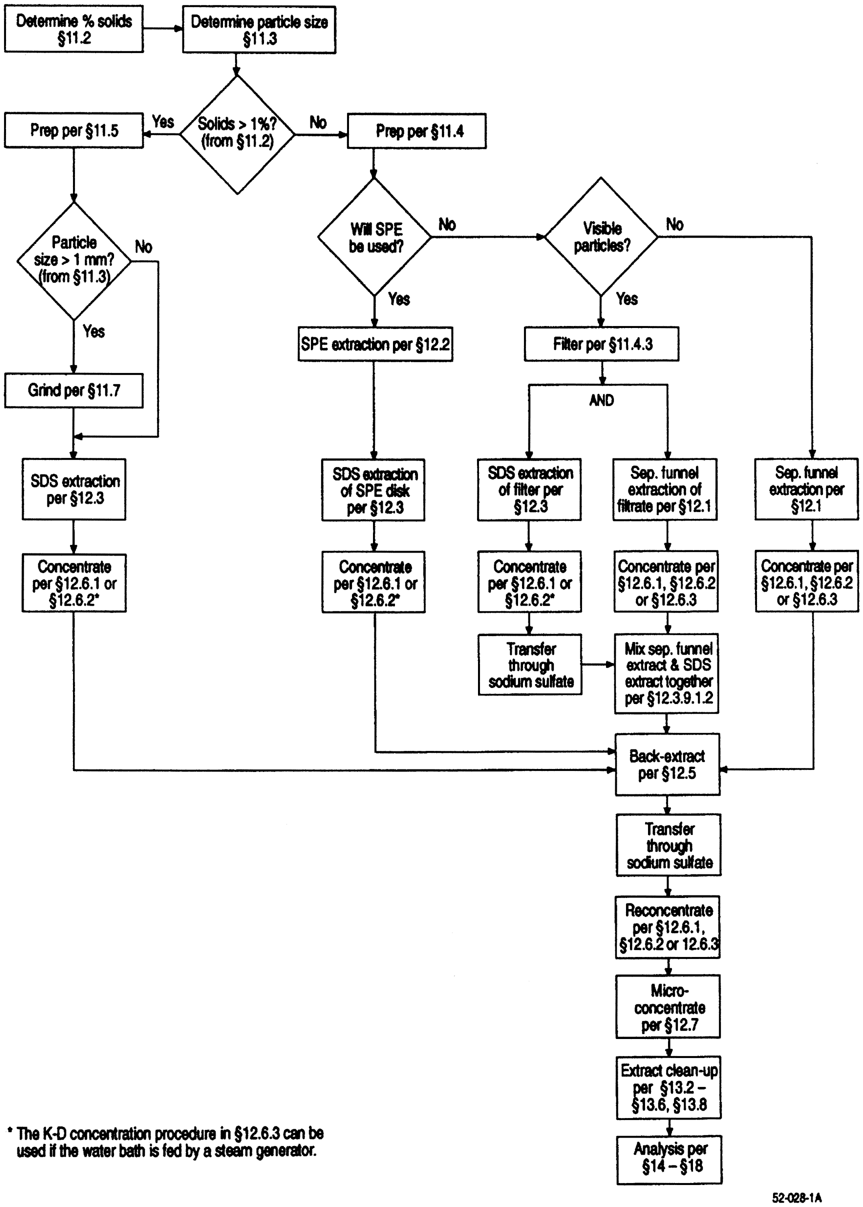

* The K-D concentration procedure in §12.6.3 can be used if the water bath is fed by a steam generator.

Figure 1. Flow Chart for Analysis of Aqueous and Solid Samples

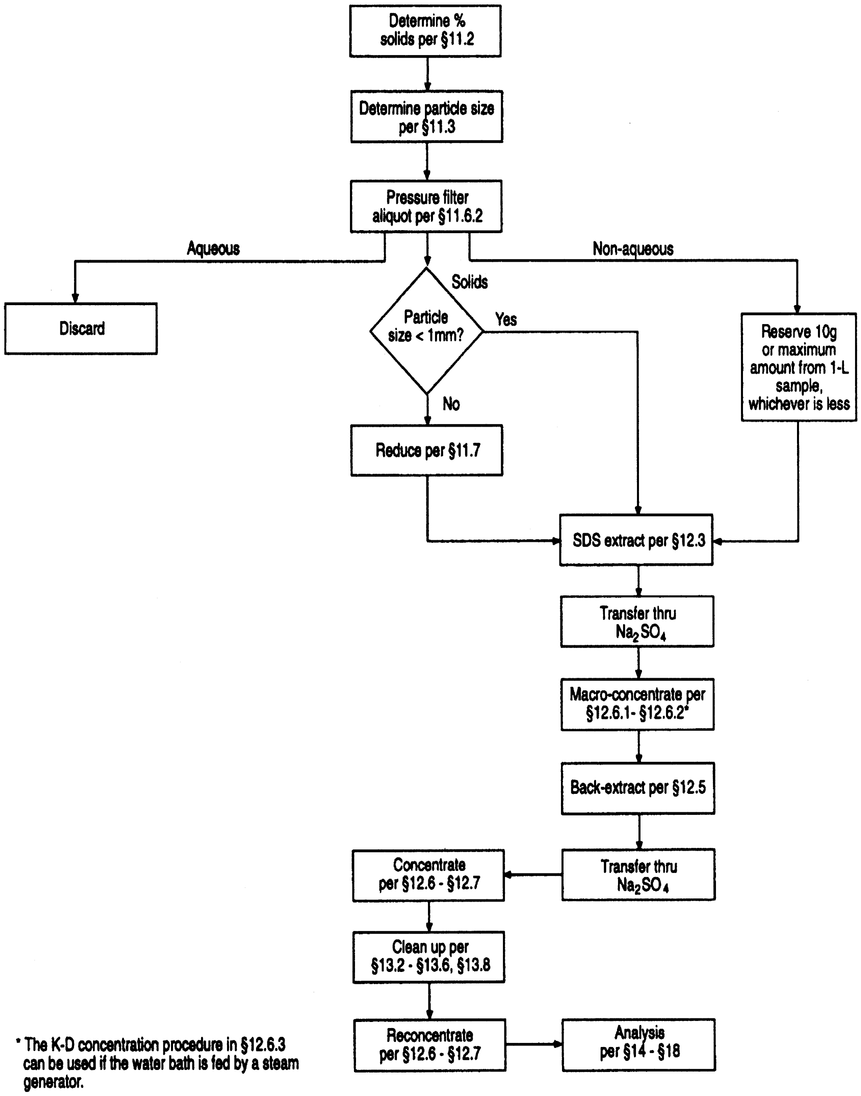

* The K-D concentration procedure in §12.6.3 can be used if the water bath is fed by a steam generator.

Figure 2. Flow Chart for Analysis of Multi-Phase Samples

52-028-2A

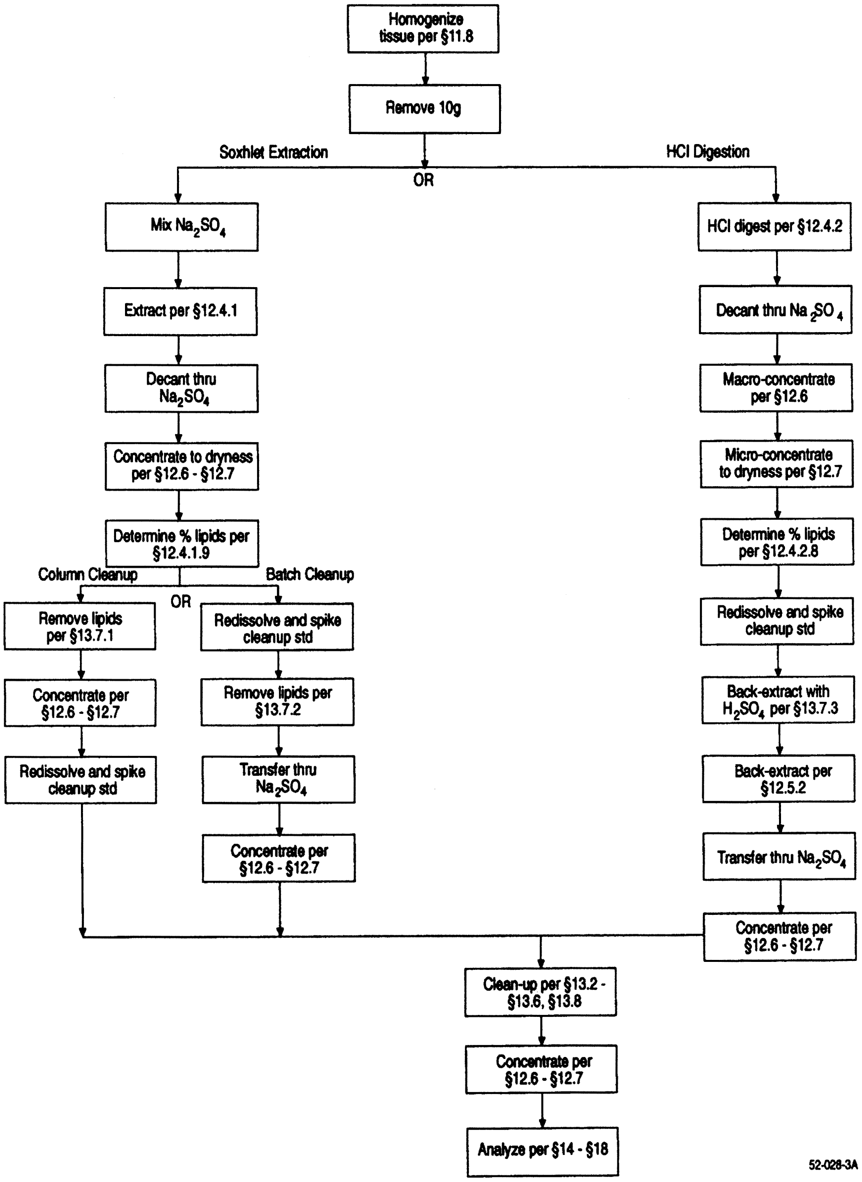

Figure 3. Flow Chart for Analysis of Tissue Samples

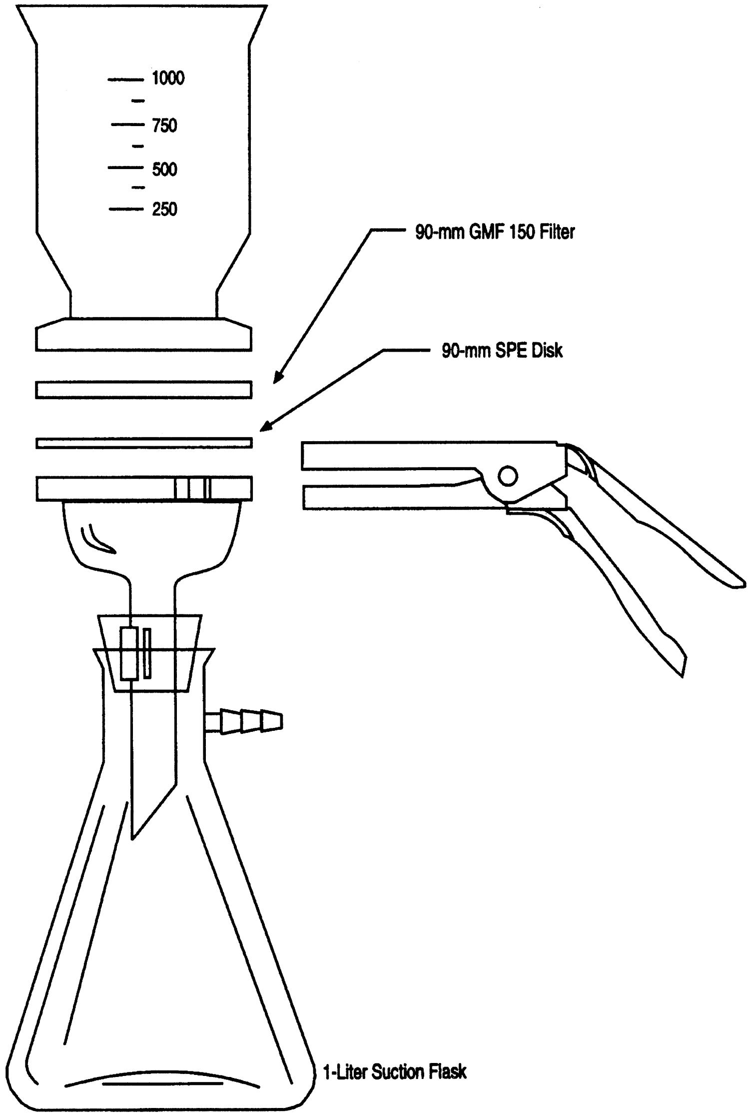

Figure 4. Solid-Phase Extraction Apparatus

52-027-1A

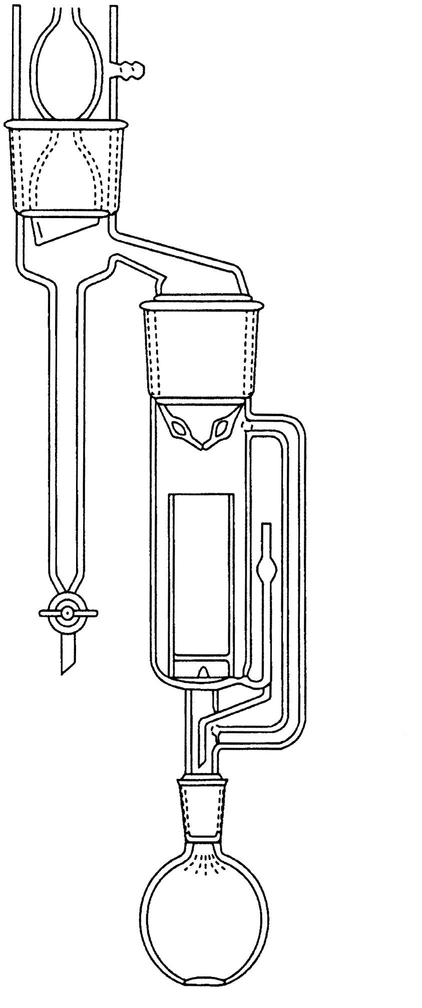

Figure 5. Soxhlet/Dean-Stark Extractor

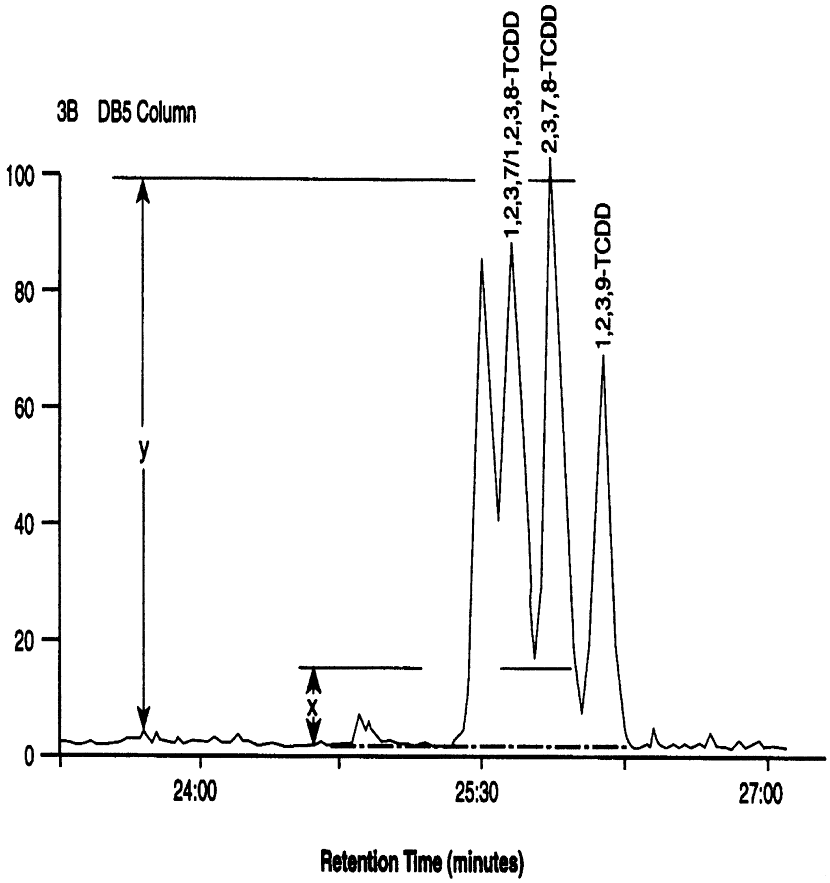

Figure 6. Isomer-Specific Separation of 2,3,7,8-TCDD on DB-5 Column

52-027-03

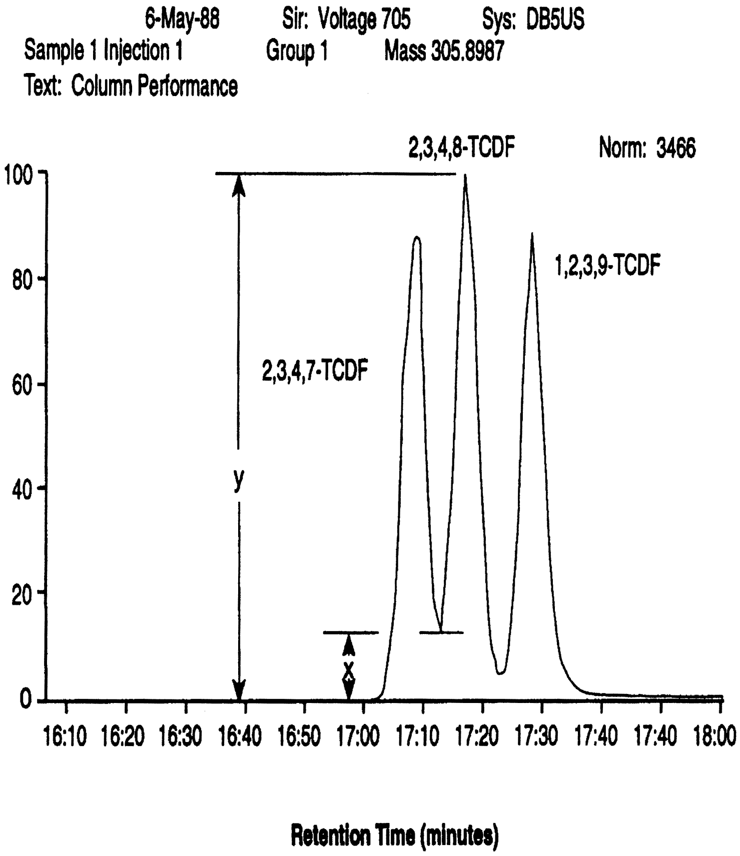

Figure 7. Isomer-Specific Separation of 2,3,7,8-TCDF on DB-5 Column

52-027-4A

24.0 Glossary of Definitions and Purposes

These definitions and purposes are specific to this method but have been conformed to common usage as much as possible.

24.1 Units of weight and Measure and Their Abbreviations.

24.1.1 Symbols:

°C—degrees Celsius
µL—microliter
µm—micrometer
<—less than
>—greater than
%—percent

24.1.2 Alphabetical abbreviations:

amp—ampere
cm—centimeter
g—gram
h—hour
D—inside diameter
in.—inch
L—liter
M—Molecular ion
m—meter
mg—milligram
min—minute
mL—milliliter
mm—millimeter
m/z—mass-to-charge ratio

N—normal; gram molecular weight of solute divided by hydrogen equivalent of solute, per liter of solution
OD—outside diameter
pg—picogram
ppb—part-per-billion
ppm—part-per-million
ppq—part-per-quadrillion
ppt—part-per-trillion
psig—pounds-per-square inch gauge
v/v—volume per unit volume
w/v—weight per unit volume

24.2 Definitions and Acronyms (in Alphabetical Order).

Analyte—A CDD or CDF tested for by this method. The analytes are listed in Table 1.

Calibration Standard (CAL)—A solution prepared from a secondary standard and/or stock solutions and used to calibrate the response of the instrument with respect to analyte concentration.

Calibration Verification Standard (VER)—The mid-point calibration standard (CS3) that is used in to verify calibration. See Table 4.

CDD—Chlorinated Dibenzo-p-ioxin—The isomers and congeners of tetra-through octa-chlorodibenzo-p-dioxin.

CDF—Chlorinated Dibenzofuran—The isomers and congeners of tetra-through octa-chlorodibenzofuran.

CS1, CS2, CS3, CS4, CS5—See Calibration standards and Table 4.

Field Blank—An aliquot of reagent water or other reference matrix that is placed in a sample container in the laboratory or the field, and treated as a sample in all respects, including exposure to sampling site conditions, storage, preservation, and all analytical procedures. The purpose of the field blank is to determine if the field or sample transporting procedures and environments have contaminated the sample.

GC—Gas chromatograph or gas chromatography.

GPC—Gel permeation chromatograph or gel permeation chromatography.

HPLC—High performance liquid chromatograph or high performance liquid chromatography.

HRGC—High resolution GC.

HRMS—High resolution MS.

IPR—Initial precision and recovery; four aliquots of the diluted PAR standard analyzed to establish the ability to generate acceptable precision and accuracy. An IPR is performed prior to the first time this method is used and any time the method or instrumentation is modified.

K-D—Kuderna-Danish concentrator; a device used to concentrate the analytes in a solvent.

Laboratory Blank—See method blank.

Laboratory Control sample (LCS)—See ongoing precision and recovery standard (OPR).

Laboratory Reagent Blank—See method blank.

May—This action, activity, or procedural step is neither required nor prohibited.

May Not—This action, activity, or procedural step is prohibited.

Method Blank—An aliquot of reagent water that is treated exactly as a sample including exposure to all glassware, equipment, solvents, reagents, internal standards, and surrogates that are used with samples. The method blank is used to determine if analytes or interferences are present in the laboratory environment, the reagents, or the apparatus.

Minimum Level (ML)—The level at which the entire analytical system must give a recognizable signal and acceptable calibration point for the analyte. It is equivalent to the concentration of the lowest calibration standard, assuming that all method-specified sample weights, volumes, and cleanup procedures have been employed.

MS—Mass spectrometer or mass spectrometry.

Must—This action, activity, or procedural step is required.

OPR—Ongoing precision and recovery standard (OPR); a laboratory blank spiked with known quantities of analytes. The OPR is analyzed exactly like a sample. Its purpose is to assure that the results produced by the laboratory remain within the limits specified in this method for precision and recovery.

PAR—Precision and recovery standard; secondary standard that is diluted and spiked to form the IPR and OPR.

PFK—Perfluorokerosene; the mixture of compounds used to calibrate the exact m/z scale in the HRMS.

Preparation Blank—See method blank.

Primary Dilution Standard—A solution containing the specified analytes that is purchased or prepared from stock solutions and diluted as needed to prepare calibration solutions and other solutions.

Quality Control Check Sample (QCS)—A sample containing all or a subset of the analytes at known concentrations. The QCS is obtained from a source external to the laboratory or is prepared from a source of standards different from the source of calibration standards. It is used to check laboratory performance with test materials prepared external to the normal preparation process.

Reagent Water—Water demonstrated to be free from the analytes of interest and potentially interfering substances at the method detection limit for the analyte.

Relative Standard Deviation (RSD)—The standard deviation times 100 divided by the mean. Also termed ‘‘coefficient of variation.’’

RF—Response factor. See Section 10.6.1.

RR—Relative response. See Section 10.5.2.

RSD—See relative standard deviation.

SDS—Soxhlet/Dean-Stark extractor; an extraction device applied to the extraction of solid and semi-solid materials (Reference 7).

Should—This action, activity, or procedural step is suggested but not required.

SICP—Selected ion current profile; the line described by the signal at an exact m/z.

SPE—Solid-phase extraction; an extraction technique in which an analyte is extracted from an aqueous sample by passage over or through a material capable of reversibly adsorbing the analyte. Also termed liquid-solid extraction.

Stock Solution—A solution containing an analyte that is prepared using a reference material traceable to EPA, the National Institute of Science and Technology (NIST), or a source that will attest to the purity and authenticity of the reference material.

TCDD—Tetrachlorodibenzo-p-dioxin.

TCDF—Tetrachlorodibenzofuran.

VER—See calibration verification standard.

METHOD 1624 REVISION B—VOLATILE ORGANIC COMPOUNDS BY ISOTOPE DILUTION GC/MS

1. Scope and Application

1.1 This method is designed to determine the volatile toxic organic pollutants associated with the 1976 Consent Decree and additional compounds amenable to purge and trap gas chromatography-mass spectrometry (GC/MS).

1.2 The chemical compounds listed in table 1 may be determined in municipal and industrial discharges by this method. The methmd is designed to meet the survey requirements of Effluent Guidelines Division (EGD) and the National Pollutants Discharge Elimination System (NPDES) under 40 CFR 136.1 and 136.5. Any modifications of this method, beyond those expressly permitted, shall be considered as major modifications subject to application and approval of alternate test procedures under 40 CFR 136.4 and 136.5.

1.3 The detection limit of this method is usually dependent on the level of interferences rather than instrumental limitations. The limits in table 2 represent the minimum quantity that can be detected with no interferences present.

1.4 The GC/MS portions of this method are for use only by analysts experienced with GC/MS or under the close supervision of such qualified persons. Laboratories unfamiliar with the analyses of environmental samples by GC/MS should run the performance tests in reference 1 before beginning.

2. Summary of Method

2.1 Stable isotopically labeled analogs of the compounds of interest are added to a 5 mL water sample. The sample is purged at 20–25 °C with an inert gas in a specially designed chamber. The volatile organic compounds are transferred from the aqueous phase into the gaseous phase where they are passed into a sorbent column and trapped. After purging is completed, the trap is backflushed and heated rapidly to desorb the compounds into a gas chromatograph (GC). The compounds are separated by the GC and detected by a mass spectrometer (MS) (references 2 and 3). The labeled compounds serve to correct the variability of the analytical technique.

2.2 Identification of a compound (qualitative analysis) is performed by comparing the GC retention time and the background corrected characteristic spectral masses with those of authentic standards.

2.3 Quantitative analysis is performed by GC/MS using extracted ion current profile (EICP) areas. Isotope dilution is used when labeled compounds are available; otherwise, an internal standard method is used.

2.4 Quality is assured through reproducible calibration and testing of the purge and trap and GC/MS systems.

3. Contamination and Interferences

3.1 Impurities in the purge gas, organic compounds out-gassing from the plumbing upstream of the trap, and solvent vapors in the laboratory account for the majority of contamination problems. The analytical system is demonstrated to be free from interferences under conditions of the analysis by analyzing blanks initially and with each sample lot (samples analyzed on the same 8 hr shift), as described in Section 8.5.

3.2 Samples can be contaminated by diffusion of volatile organic compounds (particularly methylene chloride) through the bottle seal during shipment and storage. A field blank prepared from reagent water and carried through the sampling and handling protocol serves as a check on such contamination.

3.3 Contamination by carry-over can occur when high level and low level samples are analyzed sequentially. To reduce carry-over, the purging device and sample syringe are rinsed between samples with reagent water. When an unusually concentrated sample is encountered, it is followed by analysis of a reagent water blank to check for carry-over. For samples containing large amounts of water soluble materials, suspended solids, high boiling compounds, or high levels or purgeable compounds, the purge device is washed with soap solution, rinsed with tap and distilled water, and dried in an oven at 100–125 °C. The trap and other parts of the system are also subject to contamination; therefore, frequent bakeout and purging of the entire system may be required.

3.4 Interferences resulting from samples will vary considerably from source to source, depending on the diversity of the industrial complex or municipality being sampled.

4. *Safety*

4.1 The toxicity or carcinogenicity of each compound or reagent used in this method has not been precisely determined; however, each chemical compound should be treated as a potential health hazard. Exposure to these compounds should be reduced to the lowest possible level. The laboratory is responsible for maintaining a current awareness file of OSHA regulations regarding the safe handling of the chemicals specified in this method. A reference file of data handling sheets should also be made available to all personnel involved in these analyses. Additional information on laboratory safety can be found in references 4–6.

4.2 The following compounds covered by this method have been tentatively classified as known or suspected human or mammalian carcinogens: benzene, carbon tetrachloride, chloroform, and vinyl chloride. Primary standards of these toxic compounds should be prepared in a hood, and a NIOSH/MESA approved toxic gas respirator should be worn when high concentrations are handled.

5. *Apparatus and Materials*

5.1 Sample bottles for discrete sampling.

5.1.1 Bottle—25 to 40 mL with screw cap (Pierce 13075, or equivalent). Detergent wash, rinse with tap and distilled water, and dry at >105 °C for one hr minimum before use.

5.1.2 Septum—Teflon-faced silicone (Pierce 12722, or equivalent), cleaned as above and baked at 100–200 °C, for one hour minimum.

5.2 Purge and trap device—consists of purging device, trap, and desorber. Complete devices are commercially available.

5.2.1 Purging device—designed to accept 5 mL samples with water column at least 3 cm deep. The volume of the gaseous head space between the water and trap shall be less than 15 mL. The purge gas shall be introduced less than 5 mm from the base of the water column and shall pass through the water as bubbles with a diameter less than 3 mm. The purging device shown in Figure 1 meets these criteria.

5.2.2 Trap—25 to 30 cm × 2.5 mm i.d. minimum, containing the following:

5.2.2.1 Methyl silicone packing—one ±0.2 cm, 3 percent OV–1 on 60/80 mesh Chromosorb W, or equivalent.

5.2.2.2 Porous polymer—15 ±1.0 cm, Tenax GC (2,6-diphenylene oxide polymer), 60/80 mesh, chromatographic grade, or equivalent.

5.2.2.3 Silica gel—8 ±1.0 cm, Davison Chemical, 35/60 mesh, grade 15, or equivalent. The trap shown in Figure 2 meets these specifications.

5.2.3 Desorber—shall heat the trap to 175 ±5 °C in 45 seconds or less. The polymer section of the trap shall not exceed 180 °C, and the remaining sections shall not exceed 220 °C. The desorber shown in Figure 2 meets these specifications.

5.2.4 The purge and trap device may be a separate unit or coupled to a GC as shown in Figures 3 and 4.

5.3 Gas chromatograph—shall be linearly temperature programmable with initial and final holds, shall contain a glass jet separator as the MS interface, and shall produce results which meet the calibration (Section 7), quality assurance (Section 8), and performance tests (Section 11) of this method.

5.3.1 Column—2.8 ±0.4 m × 2 ±0.5 mm i. d. glass, packekd with one percent SP–1000 on Carbopak B, 60/80 mesh, or equivalent.

5.4 Mass spectrometer—70 eV electron impact ionization; shall repetitively scan from 20 to 250 amu every 2–3 seconds, and produce a unit resolution (valleys between m/z 174–176 less than 10 percent of the height of the m/z 175 peak), background corrected mass spectrum from 50 ng 4-bromo-fluorobenzene (BFB) injected into the GC. The BFB spectrum shall meet the mass-intensity criteria in Table 3. All portions of the GC column, transfer lines, and separator which connect the GC column to the ion source shall remain at or above the column temperature during analysis to preclude condensation of less volatile compounds.

5.5 Data system—shall collect and record MS data, store mass intensity data in spectral libraries, process GC/MS data and generate reports, and shall calculate and record response factors.

5.5.1 Data acquisition—mass spectra shall be collected continuously throughout the analysis and stored on a mass storage device.

5.5.2 Mass spectral libraries—user created libraries containing mass spectra obtained from analysis of authentic standards shall be employed to reverse search GC/MS runs for the compounds of interest (Section 7.2).

5.5.3 Data processing—the data system shall be used to search, locate, identify, and quantify the compounds of interest in each GC/MS analysis. Software routines shall be employed to compute retention times and EICP areas. Displays of spectra, mass chromatograms, and library comparisons are required to verify results.

5.5.4 Response factors and multipoint calibrations—the data system shall be used to record and maintain lists of response factors (response ratios for isotope dilution) and generate multi-point calibration curves (Section 7). Computations of relative standard deviation (coefficient of variation) are useful for testing calibration linearity. Statistics on initial and on-going performance shall be maintained (Sections 8 and 11).

5.6 Syringes—5 mL glass hypodermic, with Luer-lok tips.

5.7 Micro syringes—10, 25, and 100 uL.

5.8 Syringe valves—2-way, with Luer ends (Telfon or Kel-F).

5.9 Syringe—5 mL, gas-tight, with shutoff valve.

5.10 Bottles—15 mL., screw-cap with Telfon liner.

5.11 Balance—analytical, capable of weighing 0.1 mg.

6. *Reagents and Standards*

6.1 Reagent water—water in which the compounds of interest and interfering compounds are not detected by this method (Section 11.7). It may be generated by any of the following methods:

6.1.1 Activated carbon—pass tap water through a carbon bed (Calgon Filtrasorb-300, or equivalent).

6.1.2 Water purifier—pass tap water through a purifier (Millipore Super Q, or equivalent).

6.1.3 Boil and purge—heat tap water to 90–100 °C and bubble contaminant free inert gas through it for approx one hour. While still hot, transfer the water to screw-cap bottles and seal with a Teflon-lined cap.

6.2 Sodium thiosulfate—ACS granular.

6.3 Methanol—pesticide quality or equivalent.

6.4 Standard solutions—purchased as solution or mixtures with certification to their purity, concentration, and authenticity, or prepared from materials of known purity and composition. If compound purity is 96 percent or greater, the weight may be used without correction to calculate the concentration of the standard.

6.5 Preparation of stock solutions—prepare in methanol using liquid or gaseous standards per the steps below. Observe the safety precautions given in Section 4.

6.5.1 Place approx 9.8 mL of methanol in a 10 mL ground glass stoppered volumetric flask. Allow the flask to stand unstoppered for approximately 10 minutes or until all methanol wetted surfaces have dried. In each case, weigh the flask, immediately add the compound, then immediately reweigh to prevent evaporation losses from affecting the measurement.

6.5.1.1 Liquids—using a 100 µL syringe, permit 2 drops of liquid to fall into the methanol without contacting the leck of the flask. Alternatively, inject a known volume of the compound into the methanol in the flask using a micro-syringe.

6.5.1.2 Gases (chloromethane, bromomethane, chloroethane, vinyl chloride)—fill a valved 5 mL gas-tight syringe with the compound. Lower the needle to approximately 5 mm above the methanol meniscus. Slowly introduce the compound above the surface of the meniscus. The gas will dissolve rapidly in the methanol.

6.5.2 Fill the flask to volume, stopper, then mix by inverting several times. Calculate the concentration in mg/mL (µg/µL) from the weight gain (or density if a known volume was injected).

6.5.3 Transfer the stock solution to a Teflon sealed screw-cap-bottle. Store, with minimal headspace, in the dark at −10 to −20 °C.

6.5.4 Prepare fresh standards weekly for the gases and 2-chloroethylvinyl ether. All other standards are replaced after one month, or sooner if comparison with check standards indicate a change in concentration. Quality control check standards that can be used to determine the accuracy of calibration standards are available from the US Environmental Protection Agency, Environmental Monitoring and Support Laboratory, Cincinnati, Ohio.

6.6 Labeled compound spiking solution—from stock standard solutions prepared as above, or from mixtures, prepare the spiking solution to contain a concentration such that a 5–10 µL spike into each 5 mL sample, blank, or aqueous standard analyzed will result in a concentration of 20 µg/L of each labeled compound. For the gases and for the water soluble compounds (acrolein, acrylonitrile, acetone, diethyl ether, and MEK), a concentration of 100 µg/L may be used. Include the internal standards (Section 7.5) in this solution so that a concentration of 20 µg/L in each sample, blank, or aqueous standard will be produced.

6.7 Secondary standards—using stock solutions, prepare a secondary standard in methanol to contain each pollutant at a concentration of 500 µg/mL For the gases and water soluble compounds (Section 6.6), a concentration of 2.5 mg/mL may be used.

6.7.1 Aqueous calibration standards—using a 25 µL syringe, add 20 µL of the secondary standard (Section 6.7) to 50, 100, 200, 500, and 1000 mL of reagent water to produce concentrations of 200, 100, 50, 20, and 10 µg/L, respectively. If the higher concentration standard for the gases and water soluble compounds was chosen (Section 6.6), these compounds will be at concentrations of 1000, 500, 250, 100, and 50 µg/L in the aqueous calibration standards.

6.7.2 Aqueous performance standard—an aqueous standard containing all pollutants, internal standards, labeled compounds, and BFB is prepared daily, and analyzed each shift to demonstrate performance (Section 11). This standard shall contain either 20 or 100 µg/L of the labeled and pollutant gases and water soluble compounds, 10 µg/L BFB, and 20 µg/L of all other pollutants, labeled compounds, and internal standards. It may be the nominal 20 µg/L aqueous calibration standard (Section 6.7.1).

6.7.3 A methanolic standard containing all pollutants and internal standards is prepared to demonstrate recovery of these compounds when syringe injection and purge and trap analyses are compared. This standard shall contain either 100 µg/mL or 500 µg/mL of the gases and water soluble compounds, and 100 µg/mL of the remaining pollutants and internal standards (consistent with the amounts in the aqueous performance standard in 6.7.2).

6.7.4 Other standards which may be needed are those for test of BFB performance (Section 7.1) and for collection of mass spectra for storage in spectral libraries (Section 7.2).

7. *Calibration*

7.1 Assemble the gas chromatographic apparatus and establish operating conditions given in table 2. By injecting standards into the GC, demonstrate that the analytical system meets the detection limits in table 2 and the mass-intensity criteria in table 3 for 50 ng BFB.

7.2 Mass spectral libraries—detection and identification of the compound of interest are dependent upon the spectra stored in user created libraries.

7.2.1 Obtain a mass spectrum of each pollutant and labeled compound and each internal standard by analyzing an authentic standard either singly or as part of a mixture in which there is no interference between closely eluted components. That only a single compound is present is determined by examination of the spectrum. Fragments not attributable to the compound under study indicate the presence of an interfering compound. Adjust the analytical conditions and scan rate (for this test only) to produce an undistorted spectrum at the GC peak maximum. An undistorted spectrum will usually be obtained if five complete spectra are collected across the upper half of the GC peak. Software algorithms designed to ‘‘enhance’’ the spectrum may eliminate distortion, but may also eliminate authentic m/z's or introduce other distortion.

7.2.3 The authentic reference spectrum is obtained under BFB tuning conditions (Section 7.1 and table 3) to normalize it to spectra from other instruments.

7.2.4 The spectrum is edited by saving the 5 most intense mass spectral peaks and all other mass spectral peaks greater than 10 percent of the base peak. This spectrum is stored for reverse search and for compound confirmation.

7.3 Assemble the purge and trap device. Pack the trap as shown in Figure 2 and condition overnight at 170–180 °C by backflushing with an inert gas at a flow rate of 20–30 mL/min. Condition traps daily for a minimum of 10 minutes prior to use.

7.3.1 Analyze the aqueous performance standard (Section 6.7.2) according to the purge and trap procedure in Section 10. Compute the area at the primary m/z (table 4) for each compound. Compare these areas to those obtained by injecting one µL of the methanolic standard (Section 6.7.3) to determine compound recovery. The recovery shall be greater than 20 percent for the water soluble compounds, and 60–110 percent for all other compounds. This recovery is demonstrated initially for each purge and trap GC/MS system. The test is repeated only if the purge and trap or GC/MS systems are modified in any way that might result in a change in recovery.

7.3.2 Demonstrate that 100 ng toluene (or toluene-d8) produces an area at m/z 91 (or 99) approx one-tenth that required to exceed the linear range of the system. The exact value must be determined by experience for each instrument. It is used to match the calibration range of the instrument to the analytical range and detection limits required.

7.4 Calibration by isotope dilution—the isotope dilution approach is used for the purgeable organic compounds when appropriate labeled compounds are available and when interferences do not preclude the analysis. If labeled compounds are not available, or interferences are present, internal standard methods (Section 7.5 or 7.6) are used. A calibration curve encompassing the concentration range of interest is prepared for each compound determined. The relative response (RR) vs concentration (µg/L) is plotted or computed using a linear regression. An example of a calibration curve for toluene using toluene-d8 is given in figure 5. Also shown are the ±10 percent error limits (dotted lines). Relative response is determined according to the procedures described below. A minimum of five data points are required for calibration (Section 7.4.4).

7.4.1 The relative response (RR) of pollutant to labeled compound is determined from isotope ratio values calculated from acquired data. Three isotope ratios are used in this process:

R_X=the isotope ratio measured in the pure pollutant (figure 6A).

R_y=the isotope ratio of pure labeled compound (figure 6B).

R_m=the isotope ratio measured in the analytical mixture of the pollutant and labeled compounds (figure 6C).

The correct way to calculate RR is: $RR=(R_y-R_m)\ (R_X+1)/(R_m-R_X)(R_y+1)$ If R_m is not between $2R_y$ and $0.5R_X$, the method does not apply and the sample is analyzed by internal or external standard methods (Section 7.5 or 7.6).

7.4.2 In most cases, the retention times of the pollutant and labeled compound are the same and isotope ratios (R's) can be calculated from the EICP areas, where: R=(area at m_1/z)/(area at m_2/z) If either of the areas is zero, it is assigned a value of one in the calculations; that is, if: area of m_1/z=50721, and area of m_2/z=0, then R=50721/1=50720. The m/z's are always selected such that $R_X>R_y$. When there is a difference in retention times (RT) between the pollutant and labeled compounds, special precautions are required to determine the isotope ratios.

R_X, R_y, and R_m are defined as follows:

R_X=[area m_1/z (at RT_1)]/1

R_y=1/[area m_2/z (at RT_2)]

R_m=[area m_1/z (at RT_1)]/[area m_2/z (at RT_2)]

7.4.3 An example of the above calculations can be taken from the data plotted in figure 6 for toluene and toluene-d8. For these data, R_X=168920/1=168900, R_y=1/60960=0.00001640, and R_m=96868/82508=1.174. The RR for the above data is then calculated using the equation given in Section 7.4.1. For the example, RR=1.174.

NOTE: Not all labeled compounds elute before their pollutant analogs.

7.4.4 To calibrate the analytical system by isotope dilution, analyze a 5 mL aliquot of each of the aqueous calibration standards (Section 6.7.1) spiked with an appropriate constant amount of the labeled compound spiking solution (Section 6.6), using the purge and trap procedure in section 10. Compute the RR at each concentration.

7.4.5 Linearity—if the ratio of relative response to concentration for any compound is constant (less than 20 percent coefficient of variation) over the 5 point calibration range, an averaged relative response/concentration ratio may be used for that compound; otherwise, the complete calibration curve for that compound shall be used over the 5 point calibration range.

7.5 Calibration by internal standard—used when criteria for isotope dilution (Section 7.4) cannot be met. The method is applied to pollutants having no labeled analog and to the labeled compounds. The internal standards used for volatiles analyses are bromochloromethane, 2-bromo-1-chloropropane, and 1,4-dichlorobutane. Concentrations of the labeled compounds and pollutants without labeled analogs are computed relative to the nearest eluted internal standard, as shown in table 2.

7.5.1 Response factors—calibration requires the determination of response factors (RF) which are defined by the following equation:

RF=(A_sxC_{is})/(A_{is}xC_s), where A_s is the EICP area at the characteristic m/z for the compound in the daily standard. A_{is} is the EICP area at the characteristic m/z for the internal standard.

C_{is} is the concentration (ug/L) of the internal standard

C_s is the concentration of the pollutant in the daily standard.

7.5.2 The response factor is determined at 10, 20, 50, 100, and 200 ug/L for the pollutants (optionally at five times these concentrations for gases and water soluble pollutants—see Section 6.7), in a way analogous to that for calibration by isotope dilution (Section 7.4.4). The RF is plotted against concentration for each compound in the standard (C_s) to produce a calibration curve.

7.5.3 Linearity—if the response factor (RF) for any compound is constant (less than 35 percent coefficient of variation) over the 5 point calibration range, an averaged response factor may be used for that compound; otherwise, the complete calibration curve for that compound shall be used over the 5 point range.

7.6 Combined calibration—by adding the isotopically labeled compounds and internal standards (Section 6.6) to the aqueous calibration standards (Section 6.7.1), a single set of analyses can be used to produce calibration curves for the isotope dilution and internal standard methods. These curves are verified each shift (Section 11.5) by purging the aqueous performance standard (Section 6.7.2). Recalibration is required only if calibration and on-going performance (Section 11.5) criteria cannot be met.

8. Quality Assurance/Quality Control

8.1 Each laboratory that uses this method is required to operate a formal quality assurance program. The minimum requirements of this program consist of an initial demonstration of laboratory capability, analysis of samples spiked with labeled compounds to evaluate and document data quality, and analysis of standards and blanks as tests of continued performance. Laboratory performance is compared to established performance criteria to determine if the results of analyses meet the performance characteristics of the method.

8.1.1 The analyst shall make an initial demonstration of the ability to generate acceptable accuracy and precision with this method. This ability is established as described in Section 8.2.

8.1.2 The analyst is permitted to modify this method to improve separations or lower the costs of measurements, provided all performance specifications are met. Each time a modification is made to the method, the analyst is required to repeat the procedure in Section 8.2 to demonstrate method performance.

8.1.3 Analyses of blanks are required to demonstrate freedom from contamination and that the compounds of interest and interfering compounds have not been carried over from a previous analysis (Section 3). The procedures and criteria for analysis of a blank are described in Sections 8.5 and 11.7.

8.1.4 The laboratory shall spike all samples with labeled compounds to monitor method performance. This test is described in Section 8.3. When results of these spikes indicate atypical method performance for samples, the samples are diluted to bring method performance within acceptable limits (Section 14.2).

8.1.5 The laboratory shall, on an on-going basis, demonstrate through the analysis of the aqueous performance standard (Section 6.7.2) that the analysis system is in control. This procedure is described in Sections 11.1 and 11.5.

8.1.6 The laboratory shall maintain records to define the quality of data that is generated. Development of accuracy statements is described in Sections 8.4 and 11.5.2.

8.2 Initial precision and accuracy—to establish the ability to generate acceptable precision and accuracy, the analyst shall perform the following operations:

8.2.1 Analyze two sets of four 5–mL aliquots (8 aliquots total) of the aqueous performance standard (Section 6.7.2) according to the method beginning in Section 10.

8.2.2 Using results of the first set of four analyses in Section 8.2.1, compute the average recovery ($\bar{X}$) in µg/L and the standard deviation of the recovery (s) in µg/L for each compound, by isotope dilution for polluitants with a labeled analog, and by internal standard for labeled compounds and pollutants with no labeled analog.

8.2.3 For each compound, compare s and $\bar{X}$ with the corresponding limits for initial precision and accuracy found in table 5. If s and $\bar{X}$ for all compounds meet the acceptance criteria, system performance is acceptable and analysis of blanks and samples may begin. If individual $\bar{X}$ falls outside the range for accuracy, system performance is unacceptable for that compound.

NOTE: The large number of compounds in table 5 present a substantial probability that one or more will fail one of the acceptance criteria when all compoulds are analyzed. To determine if the analytical system is out of control, or if the failure can be attributed to probability, proceed as follows:

8.2.4 Using the results of the second set of four analyses, compute s and $\bar{X}$ for only those compounds which failed the test of the first set of four analyses (Section 8.2.3). If these compounds now pass, system performance is acceptable for all compounds and analysis of blanks and samples may begin. If, however, any of the same compounds fail again, the analysis system is not performing properly for the compound(s) in question. In this event, correct the problem and repeat the entire test (Section 8.2.1).

8.3 The laboratory shall spike all samples with labeled compounds to assess method performance on the sample matrix.

8.3.1 Spike and analyze each sample according to the method beginning in Section 10.

8.3.2 Compute the percent recovery (P) of the labeled compounds using the internal standard method (Section 7.5).

8.3.3 Compare the percent recovery for each compound with the corresponding labeled compound recovery limit in table 5. If the recovery of any compound falls outside its warning limit, method performance is unacceptable for that compound in that sample. Therefore, the sample matrix is complex and the sample is to be diluted and reanalyzed, per Section 14.2.

8.4 As part of the QA program for the laboratory, method accuracy for wastewater samples shall be assessed and records shall be maintained. After the analysis of five wastewater samples for which the labeled compounds pass the tests in Section 8.3.3, compute the average percent recovery (P) and the standard deviation of the percent recovery (s_p) for the labeled compounds only. Express the accuracy assessment as a percent recovery interval from $P-2s_p$ to $P+2s_p$. For example, if $P=90\%$ and $s_p=10\%$, the accuracy interval is expressed as 70–110%. Update the accuracy assessment for each compound on a regular basis (e.g. after each 5–10 new accuracy measurements).

8.5 Blanks—reagent water blanks are analyzed to demonstrate freedom from carryover (Section 3) and contamination.

8.5.1 The level at which the purge and trap system will carry greater than 5 µg/L of a pollutant of interest (table 1) into a succeeding blank shall be determined by analyzing successively larger concentrations of these compounds. When a sample contains this concentration or more, a blank shall be analyzed immediately following this sample to demonstrate no carry-over at the 5 µg/L level.

8.5.2 With each sample lot (samples analyzed on the same 8 hr shift), a blank shall be analyzed immediately after analysis of the aqueous performance standard (Section 11.1) to demonstrate freedom from contamination. If any of the compounds of interest (table 1) or any potentially interfering compound is found in a blank at greater than 10 µg/L (assuming a response factor of 1 relative to the nearest eluted internal standard for compounds not listed in table 1), analysis of samples is halted until the source of contamination is eliminated and a blank shows no evidence of contamination at this level.

8.6 The specifications contained in this method can be met if the apparatus used is calibrated properly, then maintained in a calibrated state.

The standards used for calibration (Section 7), calibration verification (Section 11.5) and for initial (Section 8.2) and on-going (Section 11.5) precision and accuracy should be identical, so that the most precise results will be obtained. The GC/MS instrument in particular will provide the most reproducible results if dedicated to the settings and conditions required for the analyses of volatiles by this method.

8.7 Depending on specific program requirements, field replicates may be collected to determine the precision of the sampling technique, and spiked samples may be required to determine the accuracy of the analysis when internal or external standard methods are used.

9. *Sample Collection, Preservation, and Handling*

9.1 Grab samples are collected in glass containers having a total volume greater than 20 mL. Fill sample bottles so that no air bubbles pass through the sample as the bottle is filled. Seal each bottle so that no air bubbles are entrapped. Maintain the hermetic seal on the sample bottle until time of analysis.

9.2 Samples are maintained at 0–4 °C from the time of collection until analysis. If the sample contains residual chlorine, add sodium thiosulfate preservative (10 mg/40 mL) to the empty sample bottles just prior to shipment to the sample site. EPA Methods 330.4 and 330.5 may be used for measurement of residual chlorine (Reference 8). If preservative has been added, shake bottle vigorously for one minute immediately after filling.

9.3 Experimental evidence indicates that some aromatic compounds, notably benzene, toluene, and ethyl benzene are susceptible to rapid biological degradation under certain environmental conditions. Refrigeration alone may not be adequate to preserve these compounds in wastewaters for more than seven days. For this reason, a separate sample should be collected, acidified, and analyzed when these aromatics are to be determined. Collect about 500 mL of sample in a clean container.

Adjust the pH of the sample to about 2 by adding HCl (1+1) while stirring. Check pH with narrow range (1.4 to 2.8) pH paper. Fill a sample container as described in Section 9.1. If residual chlorine is present, add sodium thiosulfate to a separate sample container and fill as in Section 9.1.

9.4 All samples shall be analyzed within 14 days of collection.

10. *Purge, Trap, and GC/MS Analysis*

10.1 Remove standards and samples from cold storage and bring to 20–25 °.

10.2 Adjust the purge gas flow rate to 40 ±4 mL/min. Attach the trap inlet to the purging device and set the valve to the purge mode (figure 3). Open the syringe valve located on the purging device sample introduction needle (figure 1).

10.3 Remove the plunger from a 5–mL syringe and attach a closed syringe valve. Open the sample bottle and carefully pour the sample into the syringe barrel until it overflows. Replace the plunger and compress the sample. Open the syringe valve and vent any residual air while adjusting the sample volume to 5.0 mL. Because this process of taking an aliquot destroys the validity of the sample for future analysis, fill a second syringe at this time to protect against possible loss of data. Add an appropriate amount of the labeled compound spiking solution (Section 6.6) through the valve bore, then close the valve.

10.4 Attach the syringe valve assembly to the syringe valve on the purging device. Open both syringe valves and inject the sample into the purging chamber.

10.5 Close both valves and purge the sample for 11.0 ±0.1 minutes at 20–25 °C.

10.6 After the 11 minute purge time, attach the trap to the chromatograph and set the purge and trap apparatus to the desorb mode (figure 4). Desorb the trapped compounds into the GC column by heating the trap to 170–180 °C while backflushing with carrier gas at 20–60 mL/min for four minutes. Start MS data acquisition upon start of the desorb cycle, and start the GC column temperature program 3 minutes later. Table 1 summarizes the recommended operating conditions for the gas chromatograph. Included in this table are retention times and detection limits that were achieved under these conditions. Other columns may be used provided the requirements in Section 8 can be met. If the priority pollutant gases produce GC peaks so broad that the precision and recovery specifications (Section 8.2) cannot be met, the column may be cooled to ambient or sub-ambient temperatures to sharpen these peaks.

10.7 While analysis of the desorbed compounds proceeds, empty the purging chamber using the sample introduction syringe. Wash the chamber with two 5-mL portions of reagent water. After the purging device has been emptied, allow the purge gas to vent through the chamber until the frit is dry, so that it is ready for the next sample.

10.8 After desorbing the sample for four minutes, recondition the trap by returning to the purge mode. Wait 15 seconds, then close the syringe valve on the purging device to begin gas flow through the trap. Maintain the trap temperature at 170–180 °C. After approximately seven minutes, turn off the trap heater and open the syringe valve to stop the gas flow through the trap. When cool, the trap is ready for the next sample.

11. *System Performance*

11.1 At the beginning of each 8 hr shift during which analyses are performed, system calibration and performance shall be verified for all pollutants and labeled compounds. For these tests, analysis of the aqueous performance standard (Section 6.7.2) shall be used to verify all performance criteria. Adjustment and/or recalibration (per Section 7) shall be performed until all performance criteria are met. Only after all performance criteria are met may blanks and samples be analyzed.

11.2 BFB spectrum validity—the criteria in table 3 shall be met.

11.3 Retention times—the absolute retention times of all compounds shall approximate those given in Table 2.

11.4 GC resolution—the valley height between toluene and toluene-d8 (at m/z 91 and 99 plotted on the same graph) shall be less than 10 percent of the taller of the two peaks.

11.5 Calibration verification and on-going precision and accuracy—compute the concentration of each polutant (Table 1) by isotope dilution (Section 7.4) for those compmunds which have labeled analogs. Compute the concentration of each pollutant (Table 1) which has no labeled analog by the internal standard method (Section 7.5). Compute the concentration of the labeled compounds by the internal standard method. These concentrations are computed based on the calibration data determined in Section 7.

11.5.1 For each pollutant and labeled compound, compare the concentration with the corresponding limit for on-going accuracy in Table 5. If all compmunds meet the acceptance criteria, system performance is acceptable and analysis of blanks and samples may continue. If any individual value falls outside the range given, system performance is unacceptable for that compound.

NOTE: The large number of compounds in Table 5 present a substantial probability that one or more will fail the acceptance criteria when all compounds are analyzed. To determine if the analytical system is out of control, or if the failure may be attributed to probability, proceed as follows:

11.5.1.1 Analyze a second aliquot of the aqueous performance standard (Section 6.7.2).

11.5.1.2 Compute the concentration for only those compounds which failed the first test (Section 11.5.1). If these compounds now pass, system performance is acceptable for all compounds and analyses of blanks and samples may proceed. If, however, any of the compounds fail again, the measurement system is not performing properly for these compounds. In this event, locate and correct the problem or recalibrate the system (Section 7), and repeat the entire test (Section 11.1) for all compounds.

11.5.2 Add results which pass the specification in 11.5.1.2 to initial (Section 8.2) and previous on-going data. Update QC charts to form a graphic representation of laboratory performance (Figure 7). Develop a statement of accuracy for each pollutant and labeled compound by calculating the average percentage recovery (R) and the standard deviation of percent recovery (s_r). Express the accuracy as a recovery interval from $R-2s_r$ to $R+2s_r$. For example, if R=95% and s_r=5%, the accuracy is 85–105 percent.

12. Qualitative Determination—Accomplished by Comparison of Data from Analysis of a Sample or Blank with Data from Analysis of the Shift Standard (Section 11.1). Identification is Confirmed When Spectra and Retention Times Agree Per the Criteria Below

12.1 Labeled compounds and pollutants having no labeled analog:

12.1.1 The signals for all characteristic masses stored in the spectral library (Section 7.2.4) shall be present and shall maximize within the same two consecutive scans.

12.1.2 Either (1) the background corrected EICP areas, or (2) the corrected relative intensities of the mass spectral peaks at the GC peak maximum shall agree within a factor of two (0.5 to 2 times) for all masses stored in the library.

12.1.3 The retention time relative to the nearest eluted internal standard shall be within ±7 scans or ±20 seconds, whichever is greater.

12.2 Pollutants having a labeled analog:

12.2.1 The signals for all characteristic masses stored in the spectral library (Section 7.2.4) shall be present and shall maximize within the same two consecutive scans.

12.2.2 Either (1) the background corrected EICP areas, or (2) the corrected relative intensities of the mass spectral peaks at the GC peak maximum shall agree within a factor of two for all masses stored in the spectral library.

12.2.3 The retention time difference between the pollutant and its labeled analog shall agree within ±2 scans or ±6 seconds (whichever is greater) of this difference in the shift standard (Section 11.1).

12.3 Masses present in the experimental mass spectrum that are not present in the reference mass spectrum shall be accounted for by contaminant or background ions. If the experimental mass spectrum is contaminated, an experienced spectrometrist (Section 1.4) is to determine the presence or absence of the compound.

13. Quantitative Determination

13.1 Isotope dilution—by adding a known amount of a labeled compound to every sample prior to purging, correction for recovery of the pollutant can be made because the pollutant and its labeled analog exhibit the same effects upon purging, desorption, and gas chromatography. Relative response (RR) values for sample mixtures are used in conjunction with calibration curves described in Section 7.4 to determine concentrations directly, so long as labeled compound spiking levels are constant. For the toluene example given in Figure 6 (Section 7.4.3), RR would be equal to 1.174. For this RR value, the toluene calibration curve given in Figure 5 indicates a concentration of 31.8 µg/L.

13.2 Internal standard—calculate the concentration using the response factor determined from calibration data (Section 7.5) and the following equation:

Concentration =$(A_s \times C_{is})/(A_{is} \times RF)$ where the terms are as defined in Section 7.5.1.

13.3 If the EICP area at the quantitation mass for any compound exceeds the calibration range of the system, the sample is diluted by successive factors of 10 and these dilutions are analyzed until the area is within the calibration range.

13.4 Report results for all pollutants and labeled compounds (Table 1) found in all standards, blanks, and samples, in µg/L to three significant figures. Results for samples which have been diluted are reported at the least dilute level at which the area at the quantitation mass is within the calibration range (Section 13.3) and the labeled compound recovery is within the normal range for the Method (Section 14.2).

14. Analysis of Complex Samples

14.1 Untreated effluents and other samples frequently contain high levels (>1000 µg/L) of the compounds of interest and of interfering compounds. Some samples will foam excessively when purged; others will overload the trap/or GC column.

14.2 Dilute 0.5 mL of sample with 4.5 mL of reagent water and analyze this diluted sample when labeled compound recovery is outside the range given in Table 5. If the recovery remains outside of the range for this diluted sample, the aqueous performance standard shall be analyzed (Section 11) and calibration verified (Section 11.5). If the recovery for the labeled compmund in the aqueous performance standard is outside the range given in Table 5, the analytical system is out of control. In this case, the instrumelt shall be repaired, the performance specifications in Section 11 shall be met, and the analysis of the undiluted sample shall be repeated. If the recovery for the aqueous performance standard is within the range given in Table 5, the method does not work on the sample being analyzed and the result may not be reported for regulatory compliance purposes.

14.3 Reverse search computer programs can misinterpret the spectrum of chromatographically unresolved pollutant and labeled compound pairs with overlapping spectra when a high level of the pollutant is present. Examine each chromatogram for peaks greater than the height of the internal standard peaks. These peaks can obscure the compounds of interest.

15. Method Performance

15.1 The specifications for this method were taken from the inter-laboratory validation of EPA Method 624 (reference 9). Method 1624 has been shown to yield slightly better performance on treated effluents than Method 624. Additional method performance data can be found in Reference 10.

References

1. ‘‘Performance Tests for the Evaluation of Computerized Gas Chromatography/Mass Spectrometry Equipment and Laboratories,’’ USEPA, EMSL/Cincinnati, OH 45268, EPA–600/4–80–025 (April 1980).

2. Bellar, T.A. and Lichtenberg, J.J., ‘‘Journal American Water Works Association,’’ *66*, 739 (1974).

3. Bellar, T.A. and Lichtenberg, J.J., ‘‘Semi-automated Headspace Analysis of Drinking Waters and Industrial Waters for Purgeable Volatile Organic Compounds,’’ in *Measurement of Organic Pollutants Water and Wastewater*, C.E. VanHall, ed., American Society for Testing Materials, Philadelphia, PA, Special Technical Publication 686, (1978).

4. ‘‘Working with Carcinogens,’’ DHEW, PHS, NIOSH, Publication 77–206 (1977).

5. ‘‘OSHA Safety and Health Standards, General Industry,’’ 29 CFR part 1910, OSHA 2206, (1976).

6. ‘‘Safety in Academic Chemistry Laboratories,’’ American Chemical Society Publication, Committee on Chemical Safety (1979).

7. ‘‘Handbook of Analytical Quality Control in Water and Wastewater Laboratories,’’ USEPA, EMSL/Cincinnati, OH 45268, EPA–4–79–019 (March 1979).

8. ‘‘Methods 330.4 and 330.5 for Total Residual Chlorine,’’ USEPA, EMSL/Cincinnati, OH 45268, EPA–4–79–020 (March 1979).

9. ‘‘EPA Method Study 29 EPA Method 624—Purgeables,’’ EPA 600/4–84–054, National Technical Information Service, PB84–209915, Springfield, Virginia 22161, June 1984.

10. ‘‘Colby, B.N., Beimer, R.G., Rushneck, D.R., and Telliard, W.A., ‘‘Isotope Dilution Gas Chromatography-Mass Spectrometry for the Determination of Priority Pollutants in Industrial Effluents,’’ USEPA, Effluent Guidelines Division, Washington, DC 20460 (1980).

TABLE 1—VOLATILE ORGANIC COMPOUNDS ANALYZED BY ISOTOPE DILUTION GC/MS

Compound	Storet	CAS registry	EPA-EGD	NPDES
Acetone	81552	67–64–1	516 V	....
Acrolein	34210	107–02–8	002 V	001 V
Acrylonitrile	34215	107–13–1	003 V	002 V
Benzene	34030	71–43–2	004 V	003 V
Bromodichloromethane	32101	75–27–4	048 V	012 V

TABLE 1—VOLATILE ORGANIC COMPOUNDS ANALYZED BY ISOTOPE DILUTION GC/MS—Continued

Compound	Storet	CAS registry	EPA-EGD	NPDES
Bromoform	32104	75–25–2	047 V	005 V
Bromomethane	34413	74–83–9	046 V	020 V
Carbon tetrachloride	32102	56–23–5	006 V	006 V
Chlorobenzene	34301	108–90–7	007 V	007 V
Chloroethane	34311	75–00–3	016 V	009 V
2-chloroethylvinyl ether	34576	110–75–8	019 V	010 V
Chloroform	32106	67–66–1	023 V	011 V
Chloromethane	34418	74–87–3	045 V	021 V
Dibromochloromethane	32105	124–48–1	051 V	008 V
1,1-dichloroethane	34496	75–34–3	013 V	014 V
1,2-dichloroethane	34536	107–06–2	010 V	015 V
1,1-dichloroethene	34501	75–35–4	029 V	016 V
Trans-1,2-dichloroethane	34546	156–60–5	030 V	026 V
1,2-dichloropropane	34541	78–87–5	032 V	017 V
Cis-1,3-dichloropropene	34704	10061–01–5	....	....
Trans-1,3-dichloropropene	34699	10061–02–6	033 V	....
Diethyl ether	81576	60–29–7	515 V	....
P-dioxane	81582	123–91–1	527 V	....
Ethylbenzene	34371	100–41–4	038 V	019 V
Methylene chloride	34423	75–09–2	044 V	022 V
Methyl ethyl ketone	81595	78–93–3	514 V	....
1,1,2,2-tetrachloroethane	34516	79–34–5	015 V	023 V
Tetrachlorethene	34475	127–18–4	085 V	024 V
Toluene	34010	108–88–3	086 V	025 V
1,1,1-trichloroethane	34506	71–55–6	011 V	027 V
1,1,2-trichloroethane	34511	79–00–5	014 V	028 V
Trichloroethene	39180	79–01–6	087 V	029 V
Vinyl chloride	39175	75–01–4	088 V	031 V

TABLE 2—GAS CHROMATOGRAPHY OF PURGEABLE ORGANIC COMPOUNDS BY ISOTOPE DILUTION GC/MS

EGD No. (1)	Compound	Ref EGD No.	Mean retention time (sec)	Minimum level (2) (µg/L)
181	Bromochloromethane (I.S.)	181	730	10
245	Chloromethane-d3	181	147	50
345	Chloromethane	245	148	50
246	Bromomethane-d3	181	243	50
346	Bromomethane	246	246	50
288	Vinyl chloride-d3	181	301	50
388	Vinyl chloride	288	304	10
216	Chloroethane-d5	181	378	50
316	Chloroethane	216	386	50
244	Methylene chloride-d2	181	512	10
344	Methylene chloride	244	517	10
616	Acetone-d6	181	554	50
716	Acetone	616	565	50
002	Acrolein	181	566	50
203	Acrylonitrile-d3	181	606	50
303	Acrylonitrile	203	612	50
229	1,1-dichloroethene-d2	181	696	10
329	1,1-dichloroethene	229	696	10
213	1,1-dichloroethane-d3	181	778	10
313	1,1-dichloroethane	213	786	10
615	Diethyl ether-d10	181	804	50
715	Diethyl ether	615	820	50
230	Trans-1,2-dichloroethene-d2	181	821	10
330	Trans-1,2-dichloroethene	230	821	10
614	Methyl ethyl ketone-d3	181	840	50
714	Methyl ethyl ketone	614	848	50
223	Chloroform-13C1	181	861	10
323	Chloroform	223	861	10
210	1,2-dichloroethane-d4	181	901	10
310	1,2-dichloroethane	210	910	10
211	1,1,1-trichloroethane-13C2	181	989	10
311	1,1,1-trichloroethane	211	999	10
527	p-dioxane	181	1001	10
206	Carbon tetrachloride-13C1	182	1018	10
306	Carbon tetrachloride	206	1018	10
248	Bromodichloromethane-13C1	182	1045	10
348	Bromodichloromethane	248	1045	10
232	1,2-dichloropropane-d6	182	1123	10
332	1.2-dichloropropane	232	1134	10
233	Trans-1,3-dichloropropene-d4	182	1138	10
333	Trans-1,3-dichloropropene	233	1138	10
287	Trichloroethene-13C1	182	1172	10
387	Trichloroethene	287	1187	10
204	Benzene-d6	182	1200	10
304	Benzene	204	1212	10
251	Chlorodibromemethane-13C1	182	1222	10
351	Chlorodibromomethane	251	1222	10
214	1,1,2-trichloroethane-13C2	182	1224	10
314	1,1,2-trichloroethane	214	1224	10
019	2-chloroethylvinyl ether	182	1278	10
182	2-bromo-1-chloropropane (I.S.)	182	1306	10
247	Bromoform-13C1	182	1386	10
347	Bromoform	247	1386	10
215	1,1,2,2-tetrachloroethane-d2	183	1525	10
315	1,1,2,2-tetrachloroethane	215	1525	10
285	Tetrachloroethene-13C2	183	1528	10
385	Tetrachloroethene	285	1528	10
183	1,4-dichlorobutale (int std)	183	1555	10
286	Toluene-d8	183	1603	10
386	Toluene	286	1619	10

TABLE 2—GAS CHROMATOGRAPHY OF PURGEABLE ORGANIC COMPOUNDS BY ISOTOPE DILUTION GC/MS—Continued

EGD No. (1)	Compound	Ref EGD No.	Mean retention time (sec)	Minimum level (2) (µg/L)
207	Chlorobenzene-d5	183	1679	10
307	Chlorobenzene	207	1679	10
238	Ethylbenzene-d10	183	1802	10
338	Ethylbenzene	238	1820	10
185	Bromofluorobenzene	183	1985	10

(1) Reference numbers beginning with 0, 1 or 5 indicate a pollutant quantified by the internal standard method; reference numbers beginning with 2 or 6 indicate a labeled compound quantified by the internal standard method; reference numbers beginning with 3 or 7 indicate a pollutant quantified by isotope dilution.

(2) This is a minimum level at which the analytical system shall give recognizable mass spectra (background corrected) and acceptable calibration points. Column: 2.4m (8 ft) × 2 mm i.d. glass, packed with one percent SP–1000 coated on 60/80 Carbopak B. Carrier gas: helium at 40 mL/min. Temperature program: 3 min at 45 °C, 8 °C per min to 240 °C, hold at 240 °C for 15 minutes.

NOTE: The specifications in this table were developed from data collected from three wastewater laboratories.

TABLE 3—BFB MASS-INTENSITY SPECIFICATIONS

Mass	Intensity required
50	15 to 40 percent of mass 95.
75	30 to 60 percent of mass 95.
95	base peak, 100 percent.
96	5 to 9 percent of mass 95.
173	<2 percent of mass 174.
174	>50 percent of mass 95.
175	5 to 9 percent of mass 174
176	95 to 101 percent of mass 174
177	5 to 9 percent of mass 176.

TABLE 4—VOLATILE ORGANIC COMPOUND CHARACTERISTIC MASSES

Labeled compound	Analog	Primary m/z's
Acetone	d6	58/64
Acrolein	d2	56/58
Acrylonitrile	d3	53/56
Benzene	d6	78/84
Bromodichloromethane	13C	83/86
Bromoform	13C	173/176
Bromomethale	d3	96/99
Carbon tetrachloride	13C	47/48
Chlorobenzene	d5	112/117
Chloroethane	d5	64/71
2-chloroethylvinyl ether	d7	106/113
Chloroform	13C	85/86
Chloromethane	d3	50/53
Dibromochloromethane	13C	129/130
1,1-dichloroethane	d3	63/66
1,2-dichloroethane	d4	62/67
1,1-dichloroethene	d2	61/65
Trans-1,2-dichloroethene	d2	61/65
1,2-dichloropropane	d6	63/67
Cis-1,3-dichloropropene	d4	75/79
Trans-1,3-dichloropropene	d4	75/79
Diethyl ether	d10	74/84
p-dioxane	d8	88/96
Ethylbenzene	d10	106/116
Methylene chloride	d2	84/88
Methyl ethyl ketone	d3	72/75
1,1,2,2-tetrachloroethane	d2	83/84
Tetrachloroethene	13C2	166/172
Toluene	d8	92/99
1,1,1-trichloroethane	d3	97/102
1,1,2-trichloroethane	13C2	83/84
Trichloroethene	13C	95/133
Vinyl chloride	d3	62/65

TABLE 5—ACCEPTANCE CRITERIA FOR PERFORMANCE TESTS

Compound	Acceptance criteria at 20 µg/L			
	Initial precision and accuracy section 8.2.3		Labeled compound recovery sec. 8.3 and 14.2	On-going accuracy sec. 11.5
	s (µg/L)	X̄ (µg/L)	P (percent)	R (µg/L)
Acetone		Note 1		
Acrolein		Note 2		
Acrylonitrile		Note 2		
Benzene	9.0	13.0–28.2	ns–196	4–33
Bromodichloromethane	8.2	6.5–31.5	ns–199	4–34
Bromoform	7.0	7.4–35.1	ns–214	6–36
Bromomethane	25.0	d–54.3	ns–414	d–61
Carbon tetrachloride	6.9	15.9–24.8	42–165	12–30
Chlorobenzene	8.2	14.2–29.6	ns–205	4–35
Chloroethane	14.8	2.1–46.7	ns–308	d–51
2–chloroethylvinyl ether	36.0	d–69.8	ns–554	d–79
Chloroform	7.9	11.6–26.3	18–172	8–30
Chloromethane	26.0	d–55.5	ns–410	d–64
Dibromochloromethane	7.9	11.2–29.1	16–185	8–32
1,1-dichloroethane	6.7	11.4–31.4	23–191	9–33
1,2-dichloroethane	7.7	11.6–30.1	12–192	8–33
1,1-dichloroethene	11.7	d–49.8	ns–315	d–52
Trans-1,2–dichloroethene	7.4	10.5–31.5	15–195	8–34

TABLE 5—ACCEPTANCE CRITERIA FOR PERFORMANCE TESTS—Continued

Compound	Acceptance criteria at 20 µg/L			
	Initial precision and accuracy section 8.2.3		Labeled compound recovery sec. 8.3 and 14.2	On-going accuracy sec. 11.5
	s (µg/L)	$\bar{X}$ (µg/L)	P (percent)	R (µg/L)
1,2-dichloropropane	19.2	d–46.8	ns–343	d–51
Cis–1,3–dichloropropene	22.1	d–51.0	ns–381	d–56
Trans–1,3–dichloropropene	14.5	d–40.2	ns–284	d–44
Diethyl ether	Note 1			
P-dioxane	Note 1			
Ethyl benzene	9.6	15.6–28.5	ns–203	5–35
Methylene chloride	9.7	d–49.8	ns–316	d–50
Methyl ethyl ketone	Note 1			
1,1,2,2-tetrachloroethane	9.6	10.7–30.0	5–199	7–34
Tetrachloroethene	6.6	15.1–28.5	31–181	11–32
Toluene	6.3	14.5–28.7	4–193	6–33
1,1,1-trichloroethane	5.9	10.5–33.4	12–200	8–35
1,1,2-trichloroethane	7.1	11.8–29.7	21–184	9–32
Trichloroethene	8.9	16.6–29.5	35–196	12–34
Vinyl chloride	27.9	d–58.5	ns–452	d–65

d = detected; result must be greater than zero.
ns = no specification; limit would be below detection limit.

NOTE 1: Specifications not available for these compounds at time of release of this method.
NOTE 2: Specifications not developed for these compounds; use method 603.

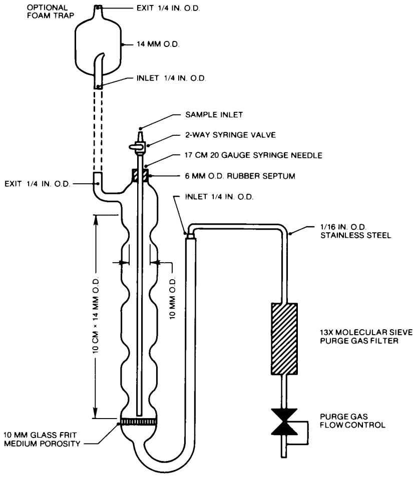

FIGURE 1 Purging Device.

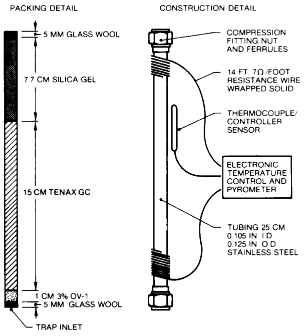

FIGURE 2 Trap Packings and Construction to Include Desorb Capability.

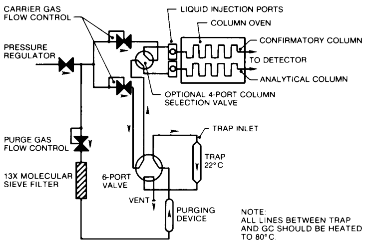

FIGURE 3 Schematic of Purge and Trap Device—Purge Mode.

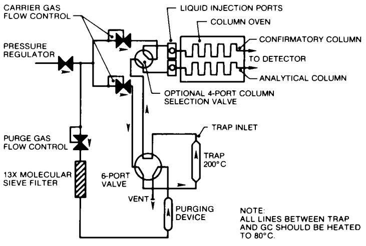

FIGURE 4 Schematic of Purge and Trap Device—Desorb Mode.

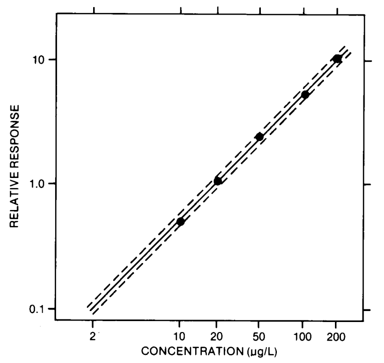

FIGURE 5 Relative Response Calibration Curve for Toluene. The Dotted Lines Enclose a ±10 Percent Error Window.

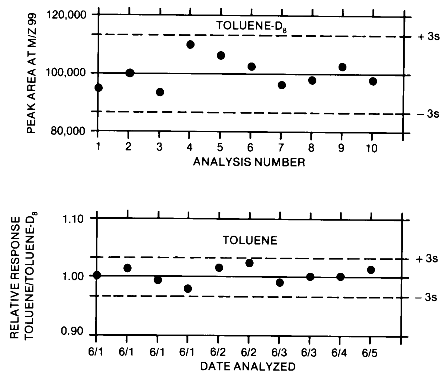

FIGURE 7 Quality Control Charts Showing Area (top graph) and Relative Response of Toluene to Toluene-d$_8$ (lower graph) Plotted as a Function of Time or Analysis Number.

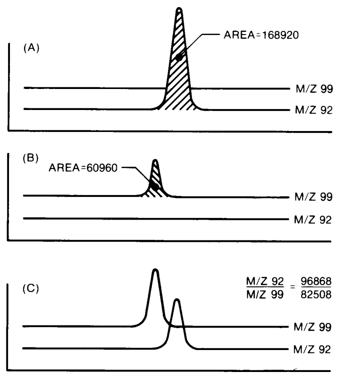

FIGURE 6 Extracted Ion Current Profiles for (A) Toluene, (B) Toluene-d$_8$, and a Mixture of Toluene and Toluene-d$_8$.

METHOD 1625 REVISION B—SEMIVOLATILE ORGANIC COMPOUNDS BY ISOTOPE DILUTION GC/MS

1. Scope and Application

1.1 This method is designed to determine the semivolatile toxic organic pollutants associated with the 1976 Consent Decree and additional compounds amenable to extraction and analysis by capillary column gas chromatography-mass spectrometry (GC/MS).

1.2 The chemical compounds listed in Tables 1 and 2 may be determined in municipal and industrial discharges by this method. The method is designed to meet the survey requirements of Effluent Guidelines Division (EGD) and the National Pollutants Discharge Elimination System (NPDES) under 40 CFR 136.1. Any modifications of this method, beyond those expressly permitted, shall be considered as major modifications subject to application and approval of alternate test procedures under 40 CFR 136.4 and 136.5.

1.3 The detection limit of this method is usually dependent on the level of interferences rather than instrumental limitations. The limits listed in Tables 3 and 4 represent the minimum quantity that can be detected with no interferences present.

1.4 The GC/MS portions of this method are for use only by analysts experienced with GC/MS or under the close supervision of such qualified persons. Laboratories unfamiliar with analyses of environmental samples by GC/MS should run the performance tests in reference 1 before beginning.

2. Summary of Method

2.1 Stable isotopically labeled analogs of the compounds of interest are added to a one liter wastewater sample. The sample is extracted at pH 12–13, then at pH <2 with methylene chloride using continuous extraction techniques. The extract is dried over sodium sulfate and concentrated to a volume of one mL. An internal standard is added to the extract, and the extract is injected into the gas chromatograph (GC). The compounds are separated by GC and detected by a mass spectrometer (MS). The labeled compounds serve to correct the variability of the analytical technique.

2.2 Identification of a compound (qualitative analysis) is performed by comparing the GC retention time and background corrected characteristic spectral masses with those of authentic standards.

2.3 Quantitative analysis is performed by GC/MS using extracted ion current profile (EICP) areas. Isotope dilution is used when labeled compounds are available; otherwise, an internal standard method is used.

2.4 Quality is assured through reproducible calibration and testing of the extraction and GC/MS systems.

3. Contamination and Interferences

3.1 Solvents, reagents, glassware, and other sample processing hardware may yield artifacts and/or elevated baselines causing misinterpretation of chromatograms and spectra. All materials shall be demonstrated to be free from interferences under the conditions of analysis by running method blanks initially and with each sample lot (samples started through the extraction process on a given 8 hr shift, to a maximum of 20). Specific selection of reagents and purification of solvents by distillation in all-glass systems may be required. Glassware and, where possible, reagents are cleaned by solvent rinse and baking at 450 °C for one hour minimum.

3.2 Interferences coextracted from samples will vary considerably from source to source, depending on the diversity of the industrial complex or municipality being samples.

4. Safety

4.1 The toxicity or carcinogenicity of each compound or reagent used in this method has not been precisely determined; however, each chemical compound should be treated as a potential health hazard. Exposure to these compounds should be reduced to the lowest possible level. The laboratory is responsible for maintaining a current awareness file of OSHA regulations regarding the safe handling of the chemicals specified in this method. A reference file of data handling sheets should also be made available to all personnel involved in these analyses. Additional information on laboratory safety can be found in references 2–4.

4.2 The following compounds covered by this method have been tentatively classified as known or suspected human or mammalian carcinogens: benzidine benzo(a)anthracene, 3,3′-dichlorobenzidine, benzo(a)pyrene, dibenzo(a,h)anthracene, N-nitrosodimethylamine, and β-naphtylamine. Primary standards of these compounds shall be prepared in a hood, and a NIOSH/MESA approved toxic gas respirator should be worn when high concentrations are handled.

5. Apparatus and Materials

5.1 Sampling equipment for discrete or composite sampling.

5.1.1 Sample bottle, amber glass, 1.1 liters minimum. If amber bottles are not available, samples shall be protected from light. Bottles are detergent water washed, then solvent rinsed or baked at 450 °C for one hour minimum before use.

5.1.2 Bottle caps—threaded to fit sample bottles. Caps are lined with Teflon. Aluminum foil may be substituted if the sample is not corrosive. Liners are detergent water washed, then reagent water (Section 6.5) and solvent rinsed, and baked at approximately 200 °C for one hour minimum before use.

5.1.3 Compositing equipment—automatic or manual compositing system incorporating glass containers for collection of a minimum 1.1 liters. Sample containers are kept at 0 to 4 °C during sampling. Glass or Teflon tubing only shall be used. If the sampler uses a peristaltic pump, a minimum length of compressible silicone rubber tubing may be used in the pump only. Before use, the tubing is thoroughly rinsed with methanol, followed by repeated rinsings with reagent water (Section 6.5) to minimize sample contamination. An integrating flow meter is used to collect proportional composite samples.

5.2 Continuous liquid-liquid extractor—Teflon or glass conncecting joints and stopcocks without lubrication (Hershberg-Wolf Extractor) one liter capacity, Ace Glass 6841–10, or equivalent.

5.3 Drying column—15 to 20 mm i.d. Pyrex chromatographic column equipped with coarse glass frit or glass wool plug.

5.4 Kuderna-Danish (K-D) apparatus

5.4.1 Concentrator tube—10mL, graduated (Kontes K–570050–1025, or equivalent) with calibration verified. Ground glass stopper (size 19/22 joint) is used to prevent evaporation of extracts.

5.4.2 Evaporation flask—500 mL (Kontes K–570001–0500, or equivalent), attached to concentrator tube with springs (Kontes K–662750–0012).

5.4.3 Snyder column—three ball macro (Kontes K–503000–0232, or equivalent).

5.4.4 Snyder column—two ball micro (Kontes K–469002–0219, or equivalent).

5.4.5 Boiling chips—approx 10/40 mesh, extracted with methylene chloride and baked at 450 °C for one hr minimum.

5.5 Water bath—heated, with concentric ring cover, capable of temperature control ±2 °C, installed in a fume hood.

5.6 Sample vials—amber glass, 2–5 mL with Teflon-lined screw cap.

5.7 Analytical balance—capable of weighing 0.1 mg.

5.8 Gas chromatograph—shall have splitless or on-column injection port for capillary column, temperature program with 30 °C hold, and shall meet all of the performance specifications in Section 12.

5.8.1 Column—30 ±5 m×0.25 ±0.02 mm i.d. 5% phenyl, 94% methyl, 1% vinyl silicone bonded phase fused silica capillary column (J & W DB–5, or equivalent).

5.9 Mass spectrometer—70 eV electron impact ionization, shall repetitively scan from 35 to 450 amu in 0.95 to 1.00 second, and shall produce a unit resolution (valleys between m/z 441–442 less than 10 percent of the height of the 441 peak), backgound corrected mass spectrum from 50 ng decafluorotriphenylphosphine (DFTPP) introduced through the GC inlet. The spectrum shall meet the mass-intensity criteria in Table 5 (reference 5). The mass spectrometer shall be interfaced to the GC such that the end of the capillary column terminates within one centimeter of the ion source but does not intercept the electron or ion beams. All portions of the column which connect the GC to the ion source shall remain at or above the column temperature during analysis to preclude condensation of less volatile compounds.

5.10 Data system—shall collect and record MS data, store mass-intensity data in spectral libraries, process GC/MS data, generate reports, and shall compute and record response factors.

5.10.1 Data acquisition—mass spectra shall be collected continuously throughout the analysis and stored on a mass storage device.

5.10.2 Mass spectral libraries—user created libraries containing mass spectra obtained from analysis of authentic standards shall be employed to reverse search GC/MS runs for the compounds of interest (Section 7.2).

5.10.3 Data processing—the data system shall be used to search, locate, identify, and quantify the compounds of interest in each GC/MS analysis. Software routines shall be employed to compute retention times and peak areas. Displays of spectra, mass chromatograms, and library comparisons are required to verify results.

5.10.4 Response factors and multipoint calibrations—the data system shall be used to record and maintain lists of response factors (response ratios for isotope dilution) and multipoint calibration curves (Section 7). Computations of relative standard deviation (coefficient of variation) are useful for testing calibration linearity. Statistics on initial (Section 8.2) and on-going (Section 12.7) performance shall be computed and maintained.

6. Reagents and Standards

6.1 Sodium hydroxide—reagent grade, 6N in reagent water.

6.2 Sulfuric acid—reagent grade, 6N in reagent water.

6.3 Sodium sulfate—reagent grade, granular anhydrous, rinsed with methylene chloride (20 mL/g) and conditioned at 450 °C for one hour minimum.

6.4 Methylene chloride—distilled in glass (Burdick and Jackson, or equivalent).

6.5 Reagent water—water in which the compounds of interest and interfering compounds are not detected by this method.

6.6 Standard solutions—purchased as solutions or mixtures with certification to their purity, concentration, and authenticity, or prepared from materials of known purity and composition. If compound purity is 96 percent or greater, the weight may be used without correction to compute the concentration of the standard. When not being used, standards are stored in the dark at −20 to −10 °C in screw-capped vials with Teflon-lined lids. A mark is placed on the vial at the level of the solution so that solvent evaporation loss can be detected. The vials are brought to room temperature prior to use. Any precipitate is redissolved and solvent is added if solvent loss has occurred.

6.7 Preparation of stock solutions—prepare in methylene chloride, benzene, p-dioxane, or a mixture of these solvents per the steps below. Observe the safety precautions in Section 4. The large number of labeled and unlabeled acid, base/neutral, and Appendix C compounds used for combined calibration (Section 7) and calibration verification (12.5) require high concentratimns (approx 40 mg/mL) when individual stock solutions are prepared, so that dilutions of mixtures will permit calibration with all compounds in a single set of solutions. The working range for most compounds is 10–200 µg/mL. Compounds with a reduced MS response may be prepared at higher concentrations.

6.7.1 Dissolve an appropriate amount of assayed reference material in a suitable solvent. For example, weigh 400 mg naphthalene in a 10 mL ground glass stoppered volumetric flask and fill to the mark with benzene. After the naphthalene is completely dissolved, transfer the solution to a 15 mL vial with Teflon-lined cap.

6.7.2 Stock standard solutions should be checked for signs of degradation prior to the preparation of calibration or performance test standards. Quality control check samples that can be used to determine the accuracy of calibration standards are available from the US Environmental Protection Agency, Environmental Monitoring and Support Laboratory, Cincinnati, Ohio 45268.

6.7.3 Stock standard solutions shall be replaced after six months, or sooner if comparison with quality control check samples indicates a change in concentration.

6.8 Labeled compound spiking solution—from stock standard solutions prepared as above, or from mixtures, prepare the spiking solution at a concentration of 200 µg/mL, or at a concentration appropriate to the MS response of each compound.

6.9 Secondary standard—using stock solutions (Section 6.7), prepare a secondary standard containing all of the compounds in Tables 1 and 2 at a concentration of 400 µg/mL, or higher concentration appropriate to the MS response of the compound.

6.10 Internal standard solution—prepare 2,2′-difluorobiphenyl (DFB) at a concentration of 10 mg/mL in benzene.

6.11 DFTPP solution—prepare at 50 µg/mL in acetone.

6.12 Solutions for obtaining authentic mass spectra (Section 7.2)—prepare mixtures of compounds at concentrations which will assure authentic spectra are obtained for storage in libraries.

6.13 Calibration solutions—combine 0.5 mL of the solution in Section 6.8 with 25, 50, 125, 250, and 500 uL of the solution in section 6.9 and bring to 1.00 mL total volume each. This will produce calibration solutions of nominal 10, 20, 50, 100, and 200 µg/mL of the pollutants and a constant nominal 100 µg/mL of the labeled compounds. Spike each solution with 10 µL of the internal standard solution (Section 6.10). These solutions permit the relative response (labeled to unlabeled) to be measured as a function of concentration (Section 7.4).

6.14 Precision and recovery standard—used for determination of initial (Section 8.2) and on-going (Section 12.7) precision and recovery. This solution shall contain the pollutants and labeled compounds at a nominal concentration of 100 µg/mL.

6.15 Stability of solutions—all standard solutions (Sections 6.8–6.14) shall be analyzed within 48 hours of preparation and on a monthly basis thereafter for signs of degradation. Standards will remain acceptable if the peak area at the quantitation mass relative to the DFB internal standard remains within ±15 percent of the area obtained in the initial analysis of the standard.

7. *Calibration*

7.1 Assemble the GC/MS and establish the operating conditions in Table 3. Analyze standards per the procedure in Section 11 to demonstrate that the analytical system meets the detection limits in Tables 3 and 4, and the mass-intensity criteria in Table 5 for 50 ng DFTPP.

7.2 Mass spectral libraries—detection and identification of compounds of interest are dependent upon spectra stored in user created libraries.

7.2.1 Obtain a mass spectrum of each pollutant, labeled compound, and the internal standard by analyzing an authentic standard either singly or as part of a mixture in which there is no interference between closely eluted components. That only a single compound is present is determined by examination of the spectrum. Fragments not attributable to the compound under study indicate the presence of an interfering compound.

7.2.2 Adjust the analytical conditions and scan rate (for this test only) to produce an undistorted spectrum at the GC peak maximum. An undistorted spectrum will usually be obtained if five complete spectra are collected across the upper half of the GC peak. Software algorithms designed to ''enhance'' the spectrum may eliminate distortion, but may also eliminate authentic masses or introduce other distortion.

7.2.3 The authentic reference spectrum is obtained under DFTPP tuning conditions (Section 7.1 and Table 5) to normalize it to spectra from other instruments.

7.2.4 The spectrum is edited by saving the 5 most intense mass spectral peaks and all other mass spectral peaks greater than 10 percent of the base peak. This edited spectrum is stored for reverse search and for compound confirmation.

7.3 Analytical range—demonstrate that 20 ng anthracene or phenanthrene produces an area at m/z 178 approx one-tenth that required to exceed the linear range of the system. The exact value must be determined by experience for each instrument. It is used to match the calibration range of the instrument to the analytical range and detection limits required, and to diagnose instrument sensitivity problems (Section 15.4). The 20 ug/mL calibration standard (Section 6.13) can be used to demonstrate this performance.

7.3.1 Polar compound detection—demonstrate that unlabeled pentachlorophenol and benzidine are detectable at the 50 µg/mL level (per all criteria in Section 13). The 50 µg/mL calibration standard (Section 6.13) can be used to demonstrate this performance.

7.4 Calibration with isotope dilution—isotope dilution is used when (1) labeled compounds are available, (2) interferences do not preclude its use, and (3) the quantitation mass extracted ion current profile (EICP) area for the compound is in the calibration range. If any of these conditions preclude isotope dilution, internal standard methods (Section 7.5 or 7.6) are used.

7.4.1 A calibration curve encompassing the concentration range is prepared for each compound to be determined. The relative response (pollutant to labeled) vs concentration in standard solutions is plotted or computed using a linear regression. The example in Figure 1 shows a calibration curve for phenol using phenol-d5 as the isotopic diluent. Also shown are the ±10 percent error limits (dotted lines). Relative Reponse (RR) is determined according to the procedures described below. A minimum of five data points are employed for calibration.

7.4.2 The relative response of a pollutant to its labeled analog is determined from isotope ratio values computed from acquired data. Three isotope ratios are used in this process:

R_X = the isotope ratio measured for the pure pollutant.

R_y = the isotope ratio measured for the labeled compound.

R_m = the isotope ratio of an analytical mixture of pollutant and labeled compounds.

The m/z's are selected such that $R_X > R_y$. If R_m is not between $2R_y$ and $0.5R_X$, the method does not apply and the sample is analyzed by internal or external standard methods.

7.4.3 Capillary columns usually separate the pollutant-labeled pair, with the labeled compound eluted first (Figure 2). For this case, R_X = [area m_1/z]/1, at the retention time of the pollutant (RT_2). R_y = 1/[area m_2/z, at the retention time of the labeled compound RT_1). R_m = [area at m_1/z (at RT_2)]/[area at RT_1)], as measured in the mixture of the pollutant and labeled compounds (Figure 2), and RR = R_m.

7.4.4 Special precautions are taken when the pollutant-labeled pair is not separated, or when another labeled compound with interfering spectral masses overlaps the pollutant (a case which can occur with isomeric compounds). In this case, it is necessary to determine the respective contributions of the pollutant and labeled compounds to the respective EICP areas. If the peaks are separated well enough to permit the data system or operator to remove the contributions of the compounds to each other, the equations in Section 7.4.3 apply. This usually occurs when the height of the valley between the two GC peaks at the same m/z is less than 10 percent of the height of the shorter of the two peaks. If significant GC and spectral overlap occur, RR is computed using the following equation:

$RR = (R_y - R_m) (R_X + 1)/(R_m - R_X) (R_y + 1)$, where R_X is measured as shown in Figure 3A, R_y is measured as shown in Figure 3B, and R_m is measured as shown in Figure 3C. For example, R_X = 46100/4780 = 9.644, R_y = 2650/43600 = 0.0608, R_m = 49200/48300 = 1.019. amd RR = 1.114.

7.4.5 To calibrate the analytical system by isotope dilution, analyze a 1.0 µL aliquot of each of the calibration standards (Section 6.13) using the procedure in Section 11. Compute the RR at each concentration.

7.4.6 Linearity—if the ratio of relative response to concentration for any compound is constant (less than 20 percent coefficient of variation) over the 5 point calibration range, and averaged relative response/concentration ratio may be used for that compound; otherwise, the complete calibration curve for that compound shall be used over the 5 point calibration range.

7.5 Calibration by internal standard—used when criteria for istope dilution (Section 7.4) cannot be met. The internal standard to be used for both acid and base/neutral analyses is 2,2′-difluorobiphenyl. The internal standard method is also applied to determination of compounds having no labeled analog, and to measurement of labeled compounds for intra-laboratory statistics (Sections 8.4 and 12.7.4).

7.5.1 Response factors—calibration requires the determination of response factors (RF) which are defined by the following equation:

$RF = (A_s \times C_{is})/(A_{is} \times C_s)$, where

A_s is the area of the characteristic mass for the compmund in the daily standard

A_{is} is the area of the characteristic mass for the internal standard

C_{is} is the concentration of the internal standard (µg/mL)

C_s is the concentration of the compound in the daily standard (µg/mL)

7.5.1.1 The response factor is determined for at least five concentrations appropriate to the response of each compound (Section 6.13); nominally, 10, 20, 50, 100, and 200 µg/mL. The amount of internal standard added to each extract is the same (100 µg/mL) so that C_{is} remains constant. The RF is plotted vs concentration for each compound in the standard (C_s) to produce a calibration curve.

7.5.1.2 Linearity—if the response factor (RF) for any compound is constant (less than 35 percent coefficient of variation) over the 5 point calibration range, an averaged response factor may be used for that compound; otherwise, the complete calibration curve for that compound shall be used over the 5 point range.

7.6 Combined calibration—by using calibration solutions (Section 6.13) containing the pollutants, labeled compounds, and the internal standard, a single set of analyses can be used to produce calibration curves for the isotope dilution and internal standard methods. These curves are verified each shift (Section 12.5) by analyzing the 100 µg/mL calibration standard (Section 6.13). Recalibration is required only if calibration verification (Section 12.5) criteria cannot be met.

8. *Quality Assurance/Quality Control*

8.1 Each laboratory that uses this method is required to operate a formal quality assurance program. The minimum requirements of this program consist of an initial demonstration of laboratory capability, analysis of samples spiked with labeled compounds to evaluate and document data quality, and analysis of standards and blanks as tests of continued performance. Laboratory performance is compared to established performance criteria to determine if the results of analyses meet the performance characteristics of the method.

8.1.1 The analyst shall make an initial demonstration of the ability to generate acceptable accuracy and precision with this method. This ability is established as described in Section 8.2.

8.1.2 The analyst is permitted to modify this method to improve separations or lower the costs of measurements, provided all performance specifications are met. Each time a modification is made to the method, the analyst is required to repeat the procedure in Section 8.2 to demonstrate method performance.

8.1.3 Analyses of blanks are required to demonstrate freedom from contamination. The procedures and criteria for analysis of a blank are described in Section 8.5.

8.1.4 The laboratory shall spike all samples with labeled compounds to monitor method performance. This test is described in Section 8.3. When results of these spikes indicate atypical method performance for samples, the samples are diluted to bring method performance within acceptable limits (Section 15).

8.1.5 The laboratory shall, on an on-going basis, demonstrate through calibration verification and the analysis of the precision and recovery standard (Section 6.14) that the analysis system is in control. These procedures are described in Sections 12.1, 12.5, and 12.7.

8.1.6 The laboratory shall maintain records to define the quality of data that is generated. Development of accuracy statements is described in Section 8.4.

8.2 Initial precision and accuracy—to establish the ability to generate acceptable precision and accuracy, the analyst shall perform the following operations:

8.2.1 Extract, concentrate, and analyze two sets of four one-liter aliquots (8 aliquots total) of the precision and recovery standard (Section 6.14) according to the procedure in Section 10.

8.2.2 Using results of the first set of four analyses, compute the average recovery ($\bar{X}$) in µg/mL and the standard deviation of the recovery (s) in θg/µL for each compound, by isotope dilution for pollutants with a labeled analog, and by internal standard for labeled compounds and pollutants with no labeled analog.

8.2.3 For each compound, compare s and $\bar{X}$ with the corresponding limits for initial precision and accuracy in Table 8. If s and $\bar{X}$ for all compounds meet the acceptance criteria, system performance is acceptable and analysis of blanks and samples may begin. If, however, any individual s exceeds the precision limit or any individual $\bar{X}$ falls outside the range for accuracy, system performance is unacceptable for that compound.

NOTE: The large number of compounds in Table 8 present a substantial probability that one or more will fail the acceptance criteria when all compounds are analyzed. To determine if the analytical system is out of control, or if the failure can be attributed to probability, proceed as follows:

8.2.4 Using the results of the second set of four analyses, compute s and $\bar{X}$ for only those compounds which failed the test of the first set of four analyses (Section 8.2.3). If these compounds now pass, system performance is acceptable for all compounds and analysis of blanks and samples may begin. If, however, any of the same compoulds fail again, the analysis system is not performing properly for these compounds. In this event, correct the problem and repeat the entire test (Section 8.2.1).

8.3 The laboratory shall spike all samples with labeled compounds to assess method performance on the sample matrix.

8.3.1 Analyze each sample according to the method in Section 10.

8.3.2 Compute the percent recovery (P) of the labeled compounds using the internal standard methmd (Section 7.5).

8.3.3 Compare the labeled compound recovery for each compound with the corresponding limits in Table 8. If the recovery of any compounds falls outside its warning limit, method performance is unacceptable for that compound in that sample, Therefore, the sample is complex and is to be diluted and reanalyzed per Section 15.4.

8.4 As part of the QA program for the laboratory, method accuracy for wastewater samples shall be assessed and records shall be maintained. After the analysis of five wastewater samples for which the labeled compounds pass the tests in Section 8.3, compute the average percent recovery (P) and the standard deviation of the percent recovery (s_p) for the labeled compounds only. Express the accuracy assessment as a percent recovery interval from P—2 $_{sp}$ to P+2$_{sp}$. For example, if P=90% and s_p=10%, the accuracy interval is expressed as 70–100%. Update the accuracy assessment for each compound on a regular basis (e.g. after each 5–10 new accuracy measurements).

8.5 Blanks—reagent water blanks are analyzed to demonstrate freedom from contamination.

8.5.1 Extract and concentrate a blank with each sample lot (samples started through the extraction process on the same 8 hr shift, to a maximum of 20 samples). Analyze the blank immediately after analysis of the precision and recovery standard (Section 6.14) to demonstrate freedom from contamination.

8.5.2 If any of the compounds of interest (Tables 1 and 2) or any potentially interfering compound is found in a blank at greater than 10 µg/L (assuming a response factor of 1 relative to the internal standard for compounds not listed in Tables 1 and 2), analysis of samples is halted until the source of contamination is eliminated and a blank shows no evidence of contamination at this level.

8.6 The specifications contained in this method can be met if the apparatus used is calibrated properly, then maintained in a calibrated state. The standards used for calibration (Section 7), calibration verification (Section 12.5), and for initial (Section 8.2) and on-going (Section 12.7) precision and recovery should be identical, so that the most precise results will be obtained. The GC/MS instrument in particular will provide the most reproducible results if dedicated to the settings and conditions required for the analysis of semi-volatiles by this method.

8.7 Depending on specific program requirements, field replicates may be collected to determine the precision of the sampling technique, and spiked samples may be required to determine the accuracy of the analysis when internal or external standard methods are used.

9. Sample Collection, Preservation, and Handling

9.1 Collect samples in glass containers following conventional sampling practices (Reference 7). Composite samples are collected in refrigerated glass containers (Section 5.1.3) in accordance with the requirements of the sampling program.

9.2 Maintain samples at 0–4 °C from the time collectimn until extraction. If residual chlorine is present, add 80 mg sodium thiosulfate per liter of water. EPA Methods 330.4 and 330.5 may be used to measure residual chlorine (Reference 8).

9.3 Begin sample extraction within seven days of collection, and analyze all extracts within 40 days of extraction.

10. Sample Extraction and Concentration (See Figure 4)

10.1 Labeled compound spiking—measure 1.00 ±0.01 liter of sample into a glass container. For untreated effluents, and samples which are expected to be difficult to extract and/or concentrate, measure an additional 10.0 ±0.1 mL and dilute to a final volume of 1.00 ±0.01 liter with reagent water in a glass container.

10.1.1 For each sample or sample lot (to a maximum of 20) to be extracted at the same time, place three 1.00 ±0.10 liter aliquots of reagent water in glass containers.

10.1.2 Spike 0.5 mL of the labeled compound spiking solution (Section 6.8) into all samples and one reagant water aliquot.

10.1.3 Spike 1.0 mL of the precision and recovery standard (Section 6.14) into the two remaining reagent water aliquots.

10.1.4 Stir and equilibrate all solutions for 1–2 hr.

10.2 Base/neutral extraction—place 100–150 mL methylene chloride in each continuous extractor and 200–300 in each distilling flask.

10.2.1 Pour the sample(s), blank, and standard aliquots into the extractors. Rinse the glass containers with 50–100 mL methylene chloride and add to the respective extractor.

10.2.2 Adjust the pH of the waters in the extractors to 12–13 with 6N NaOH while monitoring with a pH meter. Begin the extraction by heating the flask until the methylene chloride is boiling. When properly adjusted, 1–2 drops of methylene chloride per second will fall from the condensor tip into the water. After 1–2 hours of extraction, test the pH and readjust to 12–13 if required. Extract for 18–24 hours.

10.2.3 Remove the distilling flask, estimate and record the volume of extract (to the nearest 100 mL), and pour the contents through a drying column containing 7 to 10 cm anhydrous sodium sulfate. Rinse the distilling flask with 30–50 mL of methylene chloride and pour through the drying column. Collect the solution in a 500 mL K-D evaporator flask equipped with a 10 mL concentrator tube. Seal, label as the base/neutral fraction, and concentrate per Sections 10.4 to 10.5.

10.3 Acid extraction—adjust the pH of the waters in the extractors to 2 or less using 6N sulfuric acid. Charge clean distilling flasks with 300–400 mL of methylene chloride. Test and adjust the pH of the waters after the first 1–2 hr of extraction. Extract for 18–24 hours.

10.3.1 Repeat Section 10.2.3, except label as the acid fraction.

10.4 Concentration—concentrate the extracts in separate 500 mL K-D flasks equipped with 10 mL concentrator tubes.

10.4.1 Add 1 to 2 clean boiling chips to the flask and attach a three-ball macro Snyder column. Prewet the column by adding approximately one mL of methylene chloride through the top. Place the K-D apparatus in a hot water bath so that the entire lower rounded surface of the flask is bathed with steam. Adjust the vertical position of the apparatus and the water temperature as required to complete the concentration in 15 to 20 minutes. At the proper rate of distillation, the balls of the column will actively chatter but the chambers will not flood. When the liquid has reached an apparent volume of 1 mL, remove the K-D apparatus from the bath and allow the solvent to drain and cool for at least 10 minutes. Remove the Snyder column and rinse the flask and its lower joint into the concentrator tube with 1–2 mL of methylene chloride. A 5-mL syringe is recommended for this operation.

10.4.2 For performance standards (Sections 8.2 and 12.7) and for blanks (Section 8.5), combine the acid and base/neutral extracts for each at this point. Do not combine the acid and base/neutral extracts for samples.

10.5 Add a clean boiling chip and attach a two ball micro Snyder column to the concentrator tube. Prewet the column by adding approx 0.5 mL methylene chloride through the top. Place the apparatus in the hot water bath. Adjust the vertical position and the water temperature as required to complete the concentration in 5–10 minutes. At the proper rate of distillation, the balls of the column will actively chatter but the chambers will not flood. When the liquid reaches an apparent volume of approx 0.5 mL, remove the apparatus from the water bath and allow to drain and cool for at least 10 minutes. Remove the micro Snyder column and rinse its lower joint into the concentrator tube with approx 0.2 mL of methylene chloride. Adjust the final volume to 1.0 mL.

10.6 Transfer the concentrated extract to a clean screw-cap vial. Seal the vial with a Teflon-lined lid, and mark the level on the vial. Label with the sample number and fraction, and store in the dark at −20 to −10 °C until ready for analysis.

11. GC/MS Analysis

11.1 Establish the operating conditions given in Table 3 or 4 for analysis of the base/neutral or acid extracts, respectively. For analysis of combined extracts (Section 10.4.2), use the operating conditions in Table 3.

11.2 Bring the concentrated extract (Section 10.6) or standard (Sections 6.13 through 6.14) to room temperature and verify that any precipitate has redissolved. Verify the level on the extract (Sections 6.6 and 10.6) and bring to the mark with solvent if required.

11.3 Add the internal standard solution (Section 6.10) to the extract (use 1.0 uL of solution per 0.1 mL of extract) immediately prior to injection to minimize the possibility of loss by evaporation, adsorption, or reaction. Mix thoroughly.

11.4 Inject a volume of the standard solution or extract such that 100 ng of the internal standard will be injected, using on-column or splitless injection. For 1 mL extracts, this volume will be 1.0 uL. Start the GC column initial isothermal hold upon injection. Start MS data collection after the solvent peak elutes. Stop data collection after the benzo (ghi) perylene or pentachlorophenol peak elutes for the base/neutral or acid fraction, respectively. Return the column to the initial temperature for analysis of the next sample.

12. System and Laboratory Performance

12.1 At the beginning of each 8 hr shift during which analyses are performed, GC/MS system performance and calibration are verified for all pollutants and labeled compounds. For these tests, analysis of the 100 µg/mL calibration standard (Section 6.13) shall be used to verify all performance criteria. Adjustment and/or recalibration (per Section 7) shall be performed until all performance criteria are met. Only after all performance criteria are met may samples, blanks, and precision and recovery standards be analyzed.

12.2 DFTPP spectrum validity—inject 1 µL of the DFTPP solution (Section 6.11) either separately or within a few seconds of injection of the standard (Section 12.1) analyzed at the beginning of each shift. The criteria in Table 5 shall be met.

12.3 Retention times—the absolute retention time of 2,2′-difluorobiphenyl shall be within the range of 1078 to 1248 seconds and the relative retention times of all pollutants and labeled compounds shall fall within the limits given in Tables 3 and 4.

12.4 GC resolution—the valley height between anthracene and phenanthrene at m/z 178 (or the analogs at m/z 188) shall not exceed 10 percent of the taller of the two peaks.

12.5 Calibration verification—compute the concentration of each pollutant (Tables 1 and 2) by isotope dilution (Section 7.4) for those compounds which have labeled analogs. Compute the concentration of each pollutant which has no labeled analog by the internal standard method (Section 7.5). Compute the concentration of the labeled compounds by the internal standard method. These concentrations are computed based on the calibration data determined in Section 7.

12.5.1 For each pollutant and labeled compound being tested, compare the concentration with the calibration verification limit in Table 8. If all compounds meet the acceptance criteria, calibration has been verified and analysis of blanks, samples, and precision and recovery standards may proceed. If, however, any compound fails, the measurement system is not performing properly for that compound. In this event, prepare a fresh calibration standard or correct the problem causing the failure and repeat the test (Section 12.1), or recalibrate (Section 7).

12.6 Multiple peaks—each compound injected shall give a single, distinct GC peak.

12.7 On-going precision and accuracy.

12.7.1 Analyze the extract of one of the pair of precision and recovery standards (Section 10.1.3) prior to analysis of samples from the same lot.

12.7.2 Compute the concentration of each pollutant (Tables 1 and 2) by isotope dilution (Section 7.4) for those compounds which have labeled analogs. Compute the concentration of each pollutant which has no labeled analog by the internal standard method (Section 7.5). Compute the concentration of the labeled compounds by the internal standard method.

12.7.3 For each pollutant and labeled compound, compare the concentration with the limits for on-going accuracy in Table 8. If all compounds meet the acceptance criteria, system performance is acceptable and analysis of blanks and samples may proceed. If, however, any individual concentration falls outside of the range given, system performance is unacceptable for that compound.

NOTE: The large number of compounds in Table 8 present a substantial probability that one or more will fail when all compounds are analyzed. To determine if the extraction/concentration system is out of control or if the failure is caused by probability, proceed as follows:

12.7.3.1 Analyze the second aliquot of the pair of precision and recovery standard (Section 10.1.3).

12.7.3.2 Compute the concentration of only those pollutants or labeled compounds that failed the previous test (Section 12.7.3). If these compounds now pass, the extraction/concentration processes are in control and analysis of blanks and samples may proceed. If, however, any of the same compounds fail again, the extraction/concentration processes are not being performed properly for these compounds. In this event, correct the problem, re-extract the sample lot (Section 10) and repeat the on-going precision and recovery test (Section 12.7).

12.7.4 Add results which pass the specifications in Section 12.7.2 to initial and previous on-going data. Update QC charts to perform a graphic representation of continued laboratory performance (Figure 5). Develop a statement of laboratory accuracy for each pollutant and labeled compound by calculating the average percent recovery (R) and the standard deviation of percent recovery (s_r). Express the accuracy as a recovery interval from $R-2s_r$ to $R+2s_r$. For example, if $R=95\%$ and $s_r=5\%$, the accuracy is 85−105%.

13. Qualitative Determination

13.1 Qualititative determination is accomplished by comparison of data from analysis of a sample or blank with data from analysis of the shift standard (Section 12.1) and with data stored in the spectral libraries (Section 7.2.4). Identification is confirmed when spectra and retention times agree per the criteria below.

13.2 Labeled compounds and pollutants having no labeled analog:

13.2.1 The signals for all characteristic masses stored in the spectral library (Section 7.2.4) shall be present and shall maximize within the same two consecutive scans.

13.2.2 Either (1) the background corrected EICP areas, or (2) the corrected relative intensities of the mass spectral peaks at the GC peak maximum shall agree within a factor of two (0.5 to 2 times) for all masses stored in the library.

13.2.3 The retention time relative to the nearest eluted internal standard shall be within ±15 scans or ±15 seconds, whichever is greater of this difference in the shift standard (Section 12.1).

13.3 Pollutants having a labled analog:

13.3.1 The signals for all characteristic masses stored in the spectral library (Section 7.2.4) shall be present and shall maximize within the same two consecutive scans.

13.3.2. Either (1) the background corrected EICP areas, or (2) the corrected relative intensities of the mass spectral peaks at the GC peak maximum shall agree within a factor of two for all masses stored in the spectral library.

13.3.3. The retention time difference between the pollutant and its labeled analog shall agree within ±6 scans or ±6 seconds (whichever is greater) of this difference in the shift standard (Section 12.1).

13.4 Masses present in the experimental mass spectrum that are not present in the reference mass spectrum shall be accounted for by contaminant or background ions. If the experimental mass spectrum is contaminated, an experienced spectrometrist (Section 1.4) is to determine the presence or absence of the cmmpound.

14. Quantitative Determination

14.1 Isotope dilution—by adding a known amount of a labeled compound to every sample prior to extraction, correction for recovery of the pollutant can be made because the pollutant and its labeled analog exhibit the same effects upon extraction, concentration, and gas chromatography. Relative response (RR) values for mixtures are used in conjunction with calibration curves described in

Section 7.4 to determine concentrations directly, so long as labeled compound spiking levels are constant. For the phenml example given in Figure 1 (Section 7.4.1), RR would be equal to 1.114. For this RR value, the phenol calibration curve given in Figure 1 indicates a concentration of 27 µg/mL in the sample extract (C_{ex}).

14.2 Internal standard—compute the concentration in the extract using the response factor determined from calibration data (Section 7.5) and the following equation: $C_{ex}(\mu g/mL)=(A_s \times C_{is}/(A_{is} \times RF)$ where C_{ex} is the concentration of the compound in the extract, and the other terms are as defined in Section 7.5.1.

14.3 The concentration of the pollutant in water is computed using the volumes of the original water sample (Section 10.1) and the final extract volume (Section 10.5), as follows: Concentration in water $(\mu g/L)=(C_{ex} \times V_{ex})/V_s$ where V_{ex} is the extract volume in mL, and V_s is the sample volume in liters.

14.4 If the EICP area at the quantitiation mass for any compound exceeds the calibration range of the system, the extract of the dilute aliquot (Section 10.1) is analyzed by isotope dilution; otherwise, the extract is diluted by a factor of 10, 9 µL of internal standard solution (Section 6.10) are added to a 1.0 mL aliquot, and this diluted extract is analyzed by the internal standard method (Section 14.2). Quantify each compound at the highest concentration level within the calibration range.

14.5 Report results for all pollutants and labeled compounds (Tables 1 and 2) found in all standards, blanks, and samples in µg/L, to three significant figures. Results for samples which have been diluted are reported at the least dilute level at which the area at the quantitation mass is within the calibration range (Section 14.4) and the labeled compound recovery is within the normal range for the method (Section 15.4).

15. Analysis of Complex Samples

15.1 Untreated effluents and other samples frequently contain high levels (>1000 µg/L) of the compounds of interest, interfering compounds, and/or polymeric materials. Some samples will not concentrate to one mL (Section 10.5); others will overload the GC column and/or mass spectrometer.

15.2 Analyze the dilute aliquot (Section 10.1) when the sample will not concentrate to 1.0 mL. If a dilute aliquot was not extracted, and the sample holding time (Section 9.3) has not been exceeded, dilute an aliquot of the sample with reagent water and re-extract (Section 10.1); otherwise, dilute the extract (Section 14.4) and analyze by the internal standard method (Section 14.2).

15.3 Recovery of internal standard—the EICP area of the internal standard should be within a factor of two of the area in the shift standard (Section 12.1). If the absolute areas of the labeled compounds are within a factor of two of the respective areas in the shift standard, and the internal standard area is less than one-half of its respective area, then internal standard loss in the extract has occurred. In this case, use one of the labeled compounds (perferably a polynuclear aromatic hydrocarbon) to compute the concentration of a pollutant with no labeled analog.

15.4 Recovery of labeled compounds—in most samples, labeled compound recoveries will be similar to those from reagent water (Section 12.7). If the labeled compound recovery is outside the limits given in Table 8, the dilute extract (Section 10.1) is analyzed as in Section 14.4. If the recoveries of all labeled compounds and the internal staldard are low (per the criteria above), then a loss in instrument sensitivity is the most likely cause. In this case, the 100 µg/mL calibration standard (Section 12.1) shall be analyzed and calibration verified (Section 12.5). If a loss in sensitivity has occurred, the instrument shall be repaired, the performance specifications in Section 12 shall be met, and the extract reanalyzed. If a loss in instrument sensitivity has not occurred, the method does not work on the sample being analyzed and the result may not be reported for regulatory compliance purposes.

16. Method Performance

16.1 Interlaboratory performance for this method is detailed in references 9 and 10.

16.2 A chromatogram of the 100 µg/mL acid/base/neutral calibration standard (Section 6.13) is shown in Figure 6.

REFERENCES

1. ''Performance Tests for the Evaluation of Computerized Gas Chromatography/Mass Spectrometry Equipment and Laboratories'' USEPA, EMSL/Cincinnati, OH 45268, EPA–600/4–80–025 (April 1980).

2. ''Working with Carcinogens,'' DHEW, PHS, CDC, NIOSH, Publication 77–206, (August 1977).

3. ''OSHA Safety and Health Standards, General Industry'' OSHA 2206, 29 CFR part 1910 (January 1976).

4. ''Safety in Academic Chemistry Laboratories, '' ACS Committee on Chemical Safety (1979).

5. ''Reference Compound to Calibrate Ion Abundance Measurement in Gas Chromatography-Mass Spectrometry Systems,'' J.W. Eichelberger, L.E. Harris, and W.L. Budde, Anal. Chem., *47,* 955 (1975).

6. ''Handbook of Analytical Quality Control in Water and Wastewater Laboratories,'' USEPA, EMSL/Cincinnati, OH 45268, EPA–600/4–79–019 (March 1979).

7. ''Standard Practice for Sampling Water,'' ASTM Annual Book of Standards, ASTM, Philadelphia, PA, 76 (1980).

8. ‘‘Methods 330.4 and 330.5 for Total Residual Chlorine,’’ USEPA, EMSL/ Cincinnati, OH 45268, EPA 600/4–70–020 (March 1979).

9. Colby, B.N., Beimer, R.G., Rushneck, D.R., and Telliard, W.A., ‘‘Isotope Dilution Gas Chromatography-Mass Spectrometry for the determination of Priority Pollutants in Industrial Effluents.’’ USEPA, Effluent Guidelines Division, Washington, DC 20460 (1980).

10. ‘‘Inter-laboratory Validation of US Environmental Protection Agency Method 1625,’’ USEPA, Effluent Guidelines Division, Washington, DC 20460 (June 15, 1984).

TABLE 1—BASE/NEUTRAL EXTRACTABLE COMPOUNDS

Compound	STORET	CAS registry	EPA-EGD	NPDES
Acenaphthene	34205	83–32–9	001 B	001 B
Acenaphthylene	34200	208–96–8	077 B	002 B
Anthracene	34220	120–12–7	078 B	003 B
Benzidine	39120	92–87–5	005 B	004 B
Benzo(a)anthracene	34526	56–55–3	072 B	005 B
Benzo(b)fluoranthene	34230	205–99–2	074 B	007 B
Benzo(k)fluoranthene	34242	207–08–9	075 B	009 B
Benzo(a)pyrene	34247	50–32–8	073 B	006 B
Benzo(ghi)perylene	34521	191–24–2	079 B	008 B
Biphenyl (Appendix C)	81513	92–52–4	512 B	....
Bis(2-chloroethyl) ether	34273	111–44–4	018 B	011 B
Bis(2-chloroethyoxy)methane	34278	111–91–1	043 B	010 B
Bis(2-chloroisopropyl) ether	34283	108–60–1	042 B	012 B
Bis(2-ethylhexyl) phthalate	39100	117–81–7	066 B	013 B
4-bromophenyl phenyl ether	34636	101–55–3	041 B	014 B
Butyl benzyl phthalate	34292	85–68–7	067 B	015 B
n-C10 (Appendix C)	77427	124–18–5	517 B	....
n-C12 (Appendix C)	77588	112–40–2	506 B	....
n-C14 (Appendix C)	77691	629–59–4	518 B	....
n-C16 (Appendix C)	77757	544–76–3	519 B	....
n-C18 (Appendix C)	77804	593–45–3	520 B	....
n-C20 (Appendix C)	77830	112–95–8	521 B	....
n-C22 (Appendix C)	77859	629–97–0	522 B	....
n-C24 (Appendix C)	77886	646–31–1	523 B	....
n-C26 (Appendix C)	77901	630–01–3	524 B	....
n-C28 (Appendix C)	78116	630–02–4	525 B	....
n-C30 (Appendix C)	78117	638–68–6	526 B	....
Carbazole (4c)	77571	86–74–8	528 B	....
2-chloronaphthalene	34581	91–58–7	020 B	016 B
4-chlorophenyl phenyl ether	34641	7005–72–3	040 B	017 B
Chrysene	34320	218–01–9	076 B	018 B
P-cymene (Appendix C)	77356	99–87–6	513 B	....
Dibenzo(a,h)anthracene	34556	53–70–3	082 B	019 B
Dibenzofuran (Appendix C and 4c)	81302	132–64–9	505 B	....
Dibenzothiophene (Synfuel)	77639	132–65–0	504 B	....
Di-n-butyl phthalate	39110	84–74–2	068 B	026 B
1,2-dichlorobenzene	34536	95–50–1	025 B	020 B
1,3-dichlorobenzene	34566	541–73–1	026 B	021 B
1,4-dichlorobenzene	34571	106–46–7	027 B	022 B
3,3′-dichlorobenzidine	34631	91–94–1	028 B	023 B
Diethyl phthalate	34336	84–66–2	070 B	024 B
2,4-dimethylphenol	34606	105–67–9	034 A	003 A
Dimethyl phthalate	34341	131–11–3	071 B	025 B
2,4-dinitrotoluene	34611	121–14–2	035 B	027 B
2,6-dinitrotoluene	34626	606–20–2	036 B	028 B
Di-n-octyl phthalate	34596	117–84–0	069 B	029 B
Diphenylamine (Appendix C)	77579	122–39–4	507 B	....
Diphenyl ether (Appendix C)	77587	101–84–8	508 B	....
1,2-diphenylhydrazine	34346	122–66–7	037 B	030 B
Fluoranthene	34376	206–44–0	039 B	031 B
Fluorene	34381	86–73–7	080 B	032 B
Hexachlorobenzene	39700	118–74–1	009 B	033 B
Hexachlorobutadiene	34391	87–68–3	052 B	034 B
Hexachloroethane	34396	67–72–1	012 B	036 B
Hexachlorocyclopentadiene	34386	77–47–4	053 B	035 B
Indeno(1,2,3-cd)pyrene	34403	193–39–5	083 B	037 B
Isophorone	34408	78–59–1	054 B	038 B
Naphthalene	34696	91–20–3	055 B	039 B
B-naphthylamine (Appendix C)	82553	91–59–8	502 B	....
Nitrobenzene	34447	98–95–3	056 B	040 B
N-nitrosodimethylamine	34438	62–75–9	061 B	041 B
N-nitrosodi-n-propylamine	34428	621–64–7	063 B	042 B
N-nitrosodiphenylamine	34433	86–30–3	062 B	043 B

Table 1—Base/Neutral Extractable Compounds—Continued

Compound	STORET	CAS registry	EPA-EGD	NPDES
Phenanthrene	34461	85–01–8	081 B	044 B
Phenol	34694	108–95–2	065 A	010 A
a-Picoline (Synfuel)	77088	109–06–89	503 B	....
Pyrene	34469	129–00–0	084 B	045 B
styrene (Appendix C)	77128	100–42–5	510 B	....
a-terpineol (Appendix C)	77493	98–55–5	509 B	....
1,2,3-trichlorobenzene (4c)	77613	87–61–6	529 B	....
1,2,4-trichlorobenzene	34551	120–82–1	008 B	046 B

Table 2—Acid Extractable Compounds

Compound	STORET	CAS registry	EPA-EGD	NPDES
4-chloro-3-methylphenol	34452	59–50–7	022 A	008 A
2-chlorophenol	34586	95–57–8	024 A	001 A
2,4-dichlorophenol	34601	120–83–2	031 A	002 A
2,4-dinitrophenol	34616	51–28–5	059 A	005 A
2-methyl-4,6-dinitrophenol	34657	534–52–1	060 A	004 A
2-nitrophenol	34591	88–75–5	057 A	006 A
4-nitrophenol	34646	100–02–7	058 A	007 A
Pentachlorophenol	39032	87–86–5	064 A	009 A
2,3,6-trichlorophenol (4c)	77688	93–37–55	530 A	....
2,4,5-trichlorophenol (4c)	....	95–95–4	531 A	....
2,4,6-trichlorophenol	34621	88–06–2	021 A	011 A

Table 3—Gas Chromatography of Base/Neutral Extractable Compounds

EGD No.[1]	Compound	Retention time			Detection limit[2] (µg/L)
		Mean (sec)	EGD Ref	Relative	
164	2,2′-difluorobiphenyl (int std)	1163	164	1.000–1.000	10
061	N-nitrosodimethylamine	385	164	ns	50
603	alpha picoline-d7	417	164	0.326–0.393	50
703	alpha picoline	426	603	1.006–1.028	50
610	styrene-d5	546	164	0.450–0.488	10
710	styrene	549	610	1.002–1.009	10
613	p-cymene-d14	742	164	0.624–0.652	10
713	p-cymene	755	613	1.008–1.023	10
265	phenol-d5	696	164	0.584–0.613	10
365	phenol	700	265	0.995–1.010	10
218	bis(2-chloroethyl) ether-d8	696	164	0.584–0.607	10
318	bis(2-chloroethyl) ether	704	218	1.007–1.016	10
617	n-decane-d22	698	164	0.585–0.615	10
717	n-decane	720	617	1.022–1.038	10
226	1,3-dichlorobenzene-d4	722	164	0.605–0.636	10
326	1,3-dichlorobenzene	724	226	0.998–1.008	10
227	1,4-dichlorobenzene-d4	737	164	0.601–0.666	10
327	1,4-dichlorobenzene	740	227	0.997–1.009	10
225	1,2-dichlorobenzene-d4	758	164	0.632–0.667	10
325	1,2-dichlorobenzene	760	225	0.995–1.008	10
242	bis(2-chloroisopropyl) ether-d12	788	164	0.664–0.691	10
342	bis(2-chloroisopropyl) ether	799	242	1.010–1.016	10
212	hexachloroethane-13C	819	164	0.690–0.717	10
312	hexachloroethane	823	212	0.999–1.001	10
063	N-nitrosodi-n-propylamine	830	164	ns	20
256	nitrobenzene-d5	845	164	0.706–0.727	10
356	nitrobenzene	849	256	1.002–1.007	10
254	isophorone-d8	881	164	0.747–0.767	10
354	isophorone	889	254	0.999–1.017	10
234	2,4-dimethyl phenol-d3	921	164	0.781–0.803	10
334	2,4-dimethylphenol	924	234	0.999–1.003	10
043	bis(2-chloroethoxy) methane	939	164	ns	10
208	1,2,4-trichlorobenzene-d3	955	164	0.813–0.830	10
308	1,2,4-trichlorobenzene	958	208	1.000–1.005	10
255	naphthalene-d8	963	164	0.819–0.836	10
355	naphthalene	967	255	1.001–1.006	10
609	alpha-terpineol-d3	973	164	0.829–0.844	10

TABLE 3—GAS CHROMATOGRAPHY OF BASE/NEUTRAL EXTRACTABLE COMPOUNDS—Continued

EGD No.[1]	Compound	Retention time			Detection limit[2] (µg/L)
		Mean (sec)	EGD Ref	Relative	
709	alpha-terpineol	975	609	0.998–1.008	10
606	n-dodecane-d26	953	164	0.730–0.908	10
706	n-dodecane	981	606	0.986–1.051	10
529	1,2,3-trichlorobenzene	1003	164	ns	10
252	hexachlorobutadiene-13C4	1005	164	0.856–0.871	10
352	hexachlorobutadiene	1006	252	0.999–1.002	10
253	hexachlorocyclopentadiene-13C4	1147	164	0.976–0.986	10
353	hexachlorocyclopentadiene	1142	253	0.999–1.001	10
220	2-chloronaphthalene-d7	1185	164	1.014–1.024	10
320	2-chloronaphthalene	1200	220	0.997–1.007	10
518	n-tetradecane	1203	164	ns	10
612	Biphenyl-d10	1205	164	1.016–1.027	10
712	Biphenyl	1195	612	1.001–1.006	10
608	Diphenyl ether-d10	1211	164	1.036–1.047	10
708	Diphenyl ether	1216	608	0.997–1.009	10
277	Acenaphthylene-d8	1265	164	1.080–1.095	10
377	Acenaphthylene	1247	277	1.000–1.004	10
271	Dimethyl phthalate-d4	1269	164	1.083–1.102	10
371	Dimethyl phthalate	1273	271	0.998–1.005	10
236	2,6-dinitrotoluene-d3	1283	164	1.090–1.112	10
336	2,6-dinitrotoluene	1300	236	1.001–1.005	10
201	Acenaphthene-d10	1298	164	1.107–1.125	10
301	Acenaphthene	1304	201	0.999–1.009	10
605	Dibenzofuran-d8	1331	164	1.134–1.155	10
705	Dibenzofuran	1335	605	0.998–1.007	10
602	Beta-naphthylamine-d7	1368	164	1.163–1.189	50
702	Beta-naphthylamine	1371	602	0.996–1.007	50
280	Fluorene-d10	1395	164	1.185–1.214	10
380	Fluorene	1401	281	0.999–1.008	10
240	4-chlorophenyl phenyl ether-d5	1406	164	1.194–1.223	10
340	4-chlorophenyl phenyl ether	1409	240	0.990–1.015	10
270	Diethyl phthalate-d4	1409	164	1.197–1.229	10
370	Diethyl phthalate	1414	270	0.996–1.006	10
619	n-hexadecane-d34	1447	164	1.010–1.478	10
719	n-hexadecane	1469	619	1.013–1.020	10
235	2,4-dinitrotoluene-d3	1359	164	1.152–1.181	10
335	2,4-dinitrotoluene	1344	235	1.000–1.002	10
237	1,2-diphenylhydrazine-d8	1433	164	1.216–1.248	20
337	1,2-diphenylhydrazine (3)	1439	237	0.999–1.009	20
607	Diphenylamine-d10	1437	164	1.213–1.249	20
707	Diphenylamine	1439	607	1.000–1.007	20
262	N-nitrosodiphenylamine-d6	1447	164	1.225–1.252	20
362	N-nitrosodiphenylamine (4)	1464	262	1.000–1.002	20
041	4-bromophenyl phenyl ether	1498	164	1.271–1.307	10
209	Hexachlorobenzene-13C6	1521	164	1.288–1.327	10
309	Hexachlorobenzene	1522	209	0.999–1.001	10
281	Phenanthrene-d10	1578	164	1.334–1.380	10
520	n-octadecane	1580	164	ns	10
381	Phenanthrene	1583	281	1.000–1.005	10
278	Anthracene-d10	1588	164	1.342–1.388	10
378	Anthracene	1592	278	0.998–1.006	10
604	Dibenzothiophene-d8	1559	164	1.314–1.361	10
704	Dibenzothiophene	1564	604	1.000–1.006	10
528	Carbazole	1650	164	ns	20
621	n-eicosane-d42	1655	164	1.184–1.662	10
721	n-eicosane	1677	621	1.010–1.021	10
268	Di-n-butyl phthalate-d4	1719	164	1.446–1.510	10
368	Di-n-butyl phthalate	1723	268	1.000–1.003	10
239	Fluoranthene-d10	1813	164	1.522–1.596	10
339	Fluoranthene	1817	239	1.000–1.004	10
284	Pyrene-d10	1844	164	1.523–1.644	10
384	Pyrene	1852	284	1.001–1.003	10
205	Benzidine-d8	1854	164	1.549–1.632	50
305	Benzidine	1853	205	1.000–1.002	50
522	n-docosane	1889	164	ns	10
623	n-tetracosane-d50	1997	164	1.671–1.764	10
723	n-tetracosane	2025	612	1.012–1.015	10
067	Butylbenzyl phthalate	2060	164	ns	10
276	Chrysene-d12	2081	164	1.743–1.837	10
376	Chrysene	2083	276	1.000–1.004	10

TABLE 3—GAS CHROMATOGRAPHY OF BASE/NEUTRAL EXTRACTABLE COMPOUNDS—Continued

EGD No.[1]	Compound	Retention time			Detection limit[2] (µg/L)
		Mean (sec)	EGD Ref	Relative	
272	Benzo(a)anthracene-d12	2082	164	1.735–1.846	10
372	Benzo(a)anthracene	2090	272	0.999–1.007	10
228	3,3′-dichlorobenzidine-d6	2088	164	1.744–1.848	50
328	3,3′-dichlorobenzidine	2086	228	1.000–1.001	50
266	Bis(2-ethylhexyl) phthalate-d4	2123	164	1.771–1.880	10
366	Bis(2-ethylhexyl) phthalate	2124	266	1.000–1.002	10
524	n-hexacosane	2147	164	ns	10
269	di-n-octyl phthalate-d4	2239	164	1.867–1.982	10
369	di-n-octyl phthalate	2240	269	1.000–1.002	10
525	n-octacosane	2272	164	ns	10
274	Benzo(b)fluoranthene-d12	2281	164	1.902–2.025	10
354	Benzo(b)fluoranthene	2293	274	1.000–1.005	10
275	Benzo(k)fluoranthene-d12	2287	164	1.906–2.033	10
375	Benzo(k)fluoranthene	2293	275	1.000–1.005	10
273	Benzo(a)pyrene-d12	2351	164	1.954–2.088	10
373	Benzo(a)pyrene	2350	273	1.000–1.004	10
626	N-triacontane-d62	2384	164	1.972–2.127	10
726	N-triacontane	2429	626	1.011–1.028	10
083	Indeno(1,2,3-cd)pyrene	2650	164	ns	20
082	Dibenzo(a,h)anthracene	2660	164	ns	20
279	Benzo(ghi)perylene-d12	2741	164	2.187–2.524	20
379	Benzo(ghi)perylene	2750	279	1.001–1.006	20

[1] Reference numbers beginning with 0, 1 or 5 indicate a pollutant quantified by the internal standard method; reference numbers beginning with 2 or 6 indicate a labeled compound quantified by the internal standard method; reference numbers beginning with 3 or 7 indicate a pollutant quantified by isotope dilution.

[2] This is a minimum level at which the entire GC/MS system must give recognizable mass spectra (background corrected) and acceptable calibration points.

[3] Detected as azobenzene.

[4] Detected as diphenylamine.

ns = specification not available at time of release of method.

Column: 30 ±2 m × 0.25 ±0.02 mm i.d. 94% methyl, 4% phenyl, 1% vinyl bonded phase fused silica capillary.

Temperature program: 5 min at 30 °C; 30 – 280 °C at 8 °C per min; isothermal at 280 °C until benzo(ghi)perylene elutes.

Gas velocity: 30 ±5 cm/sec.

TABLE 4—GAS CHROMATOGRAPHY OF ACID EXTRACTABLE COMPOUNDS

EGD No.[1]	Compound	Retention time			Detection limit[2] (µg/L)
		Mean (sec)	EGD Ref	Relative	
164	2,2′-difluorobiphenyl (int std)	1163	164	1.000–1.000	10
224	2-chlorophenol-d4	701	164	0.587–0.618	10
324	2-chlorophenol	705	224	0.997–1.010	10
257	2-nitrophenol-d4	898	164	0.761–0.783	20
357	2-nitrophenol	900	257	0.994–1.009	20
231	2,4-dichlorophenol-d3	944	164	0.802–0.822	10
331	2,4-dichlorophenol	947	231	0.997–1.006	10
222	4-chloro-3-methylphenol-d2	1086	164	0.930–0.943	10
322	4-chloro-3-methylphenol	1091	222	0.998–1.003	10
221	2,4,6-trichlorophenol-d2	1162	164	0.994–1.005	10
321	2,4,6-trichlorophenol	1165	221	0.998–1.004	10
531	2,4,5-trichlorophenol	1170	164	ns	10
530	2,3,6-trichlorophenol	1195	164	ns	10
259	2,4-dinitrophenol-d3	1323	164	1.127–1.149	50
359	2,4-dinitrophenol	1325	259	1.000–1.005	50
258	4-nitrophenol-d4	1349	164	1.147–1.175	50
358	4-nitrophenol	1354	258	0.997–1.006	50
260	2-methyl-4,6-dinitrophenol-d2	1433	164	1.216–1.249	20
360	2-methyl-4,6-dinitrophenol	1435	260	1.000–1.002	20
264	Pentachlorophenol-13C6	1559	164	1.320–1.363	50
364	Pentachlorophenol	1561	264	0.998–1.002	50

[1] Reference numbers beginning with 0, 1 or 5 indicate a pollutant quantified by the internal standard method; reference numbers beginning with 2 or 6 indicate a labeled compound quantified by the internal standard method; reference numbers beginning with 3 or 7 indicate a pollutant quantified by isotope dilution.

[2] This is a minimum level at which the entire GC/MS system must give recognizable mass spectra (background corrected) and acceptable calibration points.

ns=specification not available at time of release of method.

Column: 30 ±2m×0.25 ±0.02mm i.d. 94% methyl, 4% phenyl, 1% vinyl bonded phase fused silica capillary.

Temperature program: 5 min at 30 °C; 8 °C/min. to 250°C or until pentachlorophenol elutes.

Gas velocity: 30 ±5 cm/sec.

TABLE 5—DFTPP MASS INTENSITY SPECIFICATIONS

Mass	Intensity required
51	30–60 percent of mass 198.
68	Less than 2 percent of mass 69.
70	Less than 2 percent of mass 69.
127	40–60 percent of mass 198.
197	Less than 1 percent of mass 198.
199	5–9 percent of mass 198.
275	10–30 percent of mass 198.
365	greater than 1 percent of mass 198
441	present and less than mass 443
442	40–100 percent of mass 198.
443	17–23 percent of mass 442.

TABLE 6—BASE/NEUTRAL EXTRACTABLE COMPOUND CHARACTERISTIC MASSES

Compound	Labeled analog	Primary m/z
Acenaphthene	d10	154/164
Acenaphthylene	d8	152/160
Anthracene	d10	178/188
Benzidine	d8	184/192
Benzo(a)anthracene	d12	228/240
Benzo(b)fluoranthene	d12	252/264
Benzo(k)fluoranthene	d12	252/264
Benzo(a)pyrene	d12	252/264
Benzo(ghi)perylene	d12	276/288
Biphenyl	d10	154/164
Bis(2-chloroethyl) ether	d8	93/101
Bis(2-chloroethoxy)methane	....	93
Bis(2-chloroisopropyl) ether	d12	121/131
Bis(2-ethylhexyl) phthalate	d4	149/153
4-bromophenyl phenyl ether	....	248
Butyl benzyl phthalate	....	149
n-C10	d22	55/66
n-C12	d26	55/66
n-C14	....	55
n-C16	d34	55/66
n-C18	....	55
n-C20	d42	55/66
n-C22	....	55
n-C24	d50	55/66
n-C26	....	55
n-C28	....	55
n-C30	d62	55/66
Carbazole	d8	167/175
2-chloronaphthalene	d7	162/169
4-chlorophenyl phenyl ether	d5	204/209
Chrysene	d12	228/240
p-cymene	d14	114/130
Dibenzo(a,h)anthracene	....	278
Dibenzofuran	d8	168/176
Dibenzothiophene	d8	184/192
Di-n-butyl phthalate	d4	149/153
1,2-dichlorobenzene	d4	146/152
1,3-dichlorobenzene	d4	146/152
1,4-dichlorobenzene	d4	146/152
3,3′-dichlorobenzidine	d6	252/258
Diethyl phthalate	d4	149/153
2,4-dimethylphenol	d3	122/125
Dimethyl phthalate	d4	163/167
2,4-dinitrotoluene	d3	164/168
2,6-dinitrotoluene	d3	165/167
Di-n-octyl phthalate	d4	149/153
Diphenylamine	d10	169/179
Diphenyl ether	d10	170/180
1,2-diphenylhydrazine[1]	d10	77/82
Fluoranthene	d10	202/212
Fluorene	d10	166/176
Hexachlorobenzene	13C6	284/292
Hexachlorobutadiene	13C4	225/231
Hexachloroethane	13C	201/204
Hexachlorocyclopentadiene	13C4	237/241
Ideno(1,2,3-cd)pyrene	....	276
Isophorone	d8	82/88
Naphthalene	d8	128/136
B-naphthylamine	d7	143/150
Nitrobenzene	d5	123/128
N-nitrosodimethylamine	....	74
N-nitrosodi-n-propylamine	....	70
N-nitrosodiphenylamile[2]	d6	169/175
Phenanthrene	d10	178/188
Phenol	d5	94/71
a-picoline	d7	93/100
Pyrene	d10	202/212
Styrene	d5	104/109
a-terpineol	d3	59/62
1,2,3-trichlorobenzene	d3	180/183
1,2,4-trichlorobenzene	d3	180/183

[1] Detected as azobenzene.
[2] Detected as diphenylamine.

TABLE 7—ACID EXTRACTABLE COMPOUND CHARACTERISTIC MASSES

Compound	Labeled analog	Primary m/z
4-chloro-3-methylphenol	d2	107/109
2-chlorophenol	d4	128/132
2,4-dichlorophenol	d3	162/167
2,4-dinitrophenol	d3	184/187
2-methyl-4,6-dinitrophenol	d2	198/200
2-nitrophenol	d4	139/143
4-nitrophenol	d4	139/143
Pentachlorophenol	13C6	266/272
2,3,6-trichlorophenol	d2	196/200
2,4,5-trichlorophenol	d2	196/200
2,4,6-trichlorophenol	d2	196/200

TABLE 8—ACCEPTANCE CRITERIA FOR PERFORMANCE TESTS

EGD No.[1]	Compound	Acceptance criteria				
		Initial precision and accuracy section 8.2.3 (µg/L)		Labeled compound recovery sec. 8.3 and 14.2 P (percent)	Calibration verification sec. 12.5 (µg/mL)	On-going accuracy sec. 11.6 R (µg/L)
		s	X			
301	Acenaphthene	21	79–134	....	80–125	72–144
201	Acenaphthene-d10	38	38–147	20–270	71–141	30–180
377	Acenaphtylene	38	69–186	....	60–166	61–207
277	Acenaphthylene-d8	31	38–146	23–239	66–152	33–168

TABLE 8—ACCEPTANCE CRITERIA FOR PERFORMANCE TESTS—Continued

EGD No. [1]	Compound	Acceptance criteria				
		Initial precision and accuracy section 8.2.3 (µg/L)		Labeled compound recovery sec. 8.3 and 14.2 P (percent)	Calibration verification sec. 12.5 (µg/mL)	On-going accuracy sec. 11.6 R (µg/L)
		s	X			
378	Anthracene	41	58–174		60–168	50–199
278	Anthracene-d10	49	31–194	14–419	58–171	23–242
305	Benzidine	119	16–518		34–296	11–672
205	Benzidine-d8	269	ns-ns	ns-ns	ns-ns	ns-ns
372	Benzo(a)anthracene	20	65–168		70–142	62–176
272	Benzo(a)anthracene-d12	41	25–298	12–605	28–357	22–329
374	Benzo(b)fluoranthene	183	32–545		61–164	20–ns
274	Benzo(b)fluoranthene-d12	168	11–577	ns-ns	14–ns	ns-ns
375	Benzo(k)fluoranthene	26	59–143		13–ns	53–155
275	Benzo(k)fluoranthene-d12	114	15–514	ns-ns	13–ns	ns–685
373	Benzo(a)pyrene	26	62–195		78–129	59–206
273	Benzo(a)pyrene-d12	24	35–181	21–290	12–ns	32–194
379	Benzo(ghi)perylene	21	72–160		69–145	58–168
279	Benzo(ghi)perylene-d12	45	29–268	14–529	13–ns	25–303
712	Biphenyl (Appendix C)	41	75–148		58–171	62–176
612	Biphenyl-d12	43	28–165	ns-ns	52–192	17–267
318	Bis(2-chloroethyl) ether	34	55–196		61–164	50–213
218	Bis(2-chloroethyl) ether-d8	33	29–196	15–372	52–194	25–222
043	Bis(2-chloroethoxy)methane*	27	43–153		44–228	39–166
342	Bis(2-chloroisopropyl) ether	17	81–138		67–148	77–145
242	Bis(2-chloroisopropyl)ether-d12	27	35–149	20–260	44–229	30–169
366	Bis(2-ethylhexyl) phthalate	31	69–220		76–131	64–232
266	Bis(2-ethylhexyl) phthalate-d4	29	32–205	18–364	43–232	28–224
041	4-bromophenyl phenyl ether*	44	44–140		52–193	35–172
067	Butyl benzyl phthalate*	31	19–233		22–450	35–170
717	n-C10 (Appendix C)	51	24–195		42–235	19–237
617	n-C10-d22	70	ns–298	ns-ns	44–227	ns–504
706	n-C12 (Appendix C)	74	35–369		60–166	29–424
606	n-C12-d26	53	ns–331	ns-ns	41–242	ns–408
518	n-C14 (Appendix C)*	109	ns–985		37–268	ns-ns
719	n-C16 (Appendix C)	33	80–162		72–138	71–181
619	n-C16-d34	46	37–162	18–308	54–186	28–202
520	n-C18 (Appendix C)*	39	42–131		40–249	35–167
721	n-C20 (Appendix C)	59	53–263		54–184	46–301
621	n-C20-d42	34	34–172	19–306	62–162	29–198
522	n-C22 (Appendix C)*	31	45–152		40–249	39–195
723	n-C24 (Appendix C)	11	80–139		65–154	78–142
623	n-C24-d50	28	27–211	15–376	50–199	25–229
524	n-C26 (Appendix C)*	35	35–193		26–392	31–212
525	n-C28 (Appendix C)*	35	35–193		26–392	31–212
726	n-C30 (Appendix C)	32	61–200		66–152	56–215
626	n-C30-d62	41	27–242	13–479	24–423	23–274
528	Carbazole (4c)*	38	36–165		44–227	31–188
320	2-chloronaphthalene	100	46–357		58–171	35–442
220	2-chloronaphthalene-d7	41	30–168	15–324	72–139	24–204
322	4-chloro-3-methylphenol	37	76–131		85–115	62–159
222	4-chloro-3-methylphenol-d2	111	30–174	ns–613	68–147	14–314
324	2-chlorophenol	13	79–135		78–129	76–138
224	2-chlorophenol-d4	24	36–162	23–255	55–180	33–176
340	4-chlorophenyl phenyl ether	42	75–166		71–142	63–194
240	4-chlorophenyl phenyl ether-d5	52	40–161	19–325	57–175	29–212
376	Chrysene	51	59–186		70–142	48–221
276	Chrysene-d12	69	33–219	13–512	24–411	23–290
713	p-cymene (Appendix C)	18	76–140		79–127	72–147
613	p-cymene-d14	67	ns–359	ns-ns	66–152	ns–468
082	Dibenzo(a,h)anthracene*	55	23–299		13–761	19–340
705	Dibenzofuran (Appendix C)	20	85–136		73–136	79–146
605	Dibenzofuran-d8	31	47–136	28–220	66–150	39–160
704	Dibenzothiophene (Synfuel)	31	79–150		72–140	70–168
604	Dibenzothiophene-d8	31	48–130	29–215	69–145	40–156
368	Di-n-butyl phthalate	15	76–165		71–142	74–169
268	Di-n-butyl phthalate-d4	23	23–195	13–346	52–192	22–209
325	1,2-dichlorobenzene	17	73–146		74–135	70–152
225	1,2-dichlorobenzene-d4	35	14–212	ns–494	61–164	11–247
326	1,3-dichlorobenzene	43	63–201		65–154	55–225
226	1,3-dichlorobenzene-d4	48	13–203	ns–550	52–192	ns–260
327	1,4-dichlorobenzene	42	61–194		62–161	53–219

TABLE 8—ACCEPTANCE CRITERIA FOR PERFORMANCE TESTS—Continued

EGD No. [1]	Compound	Acceptance criteria				
		Initial precision and accuracy section 8.2.3 (µg/L)		Labeled compound recovery sec. 8.3 and 14.2 P (percent)	Calibration verification sec. 12.5 (µg/mL)	On-going accuracy sec. 11.6 R (µg/L)
		s	X			
227	1,4-dichlorobenzene-d4	48	15–193	ns–474	65–153	11–245
328	3,3′-dichlorobenzidine	26	68–174		77–130	64–185
228	3,3′-dichlorobenzidine-d6	80	ns–562	ns-ns	18–558	ns-ns
331	2,4-dichlorophenol	12	85–131		67–149	83–135
231	2,4-dichlorophenol-d3	28	38–164	24–260	64–157	34–182
370	Diethyl phthalate	44	75–196		74–135	65–222
270	Diethyl phthalate-d4	78	ns–260	ns-ns	47–211	ns-ns
334	2,4-dimethylphenol	13	62–153		67–150	60–156
234	2,4-dimethylphenol-d3	22	15–228	ns–449	58–172	14–242
371	Dimethyl phthalate	36	74–188		73–137	67–207
271	Dimethyl phthalate-d4	108	ns–640	ns-ns	50–201	ns-ns
359	2,4-dinitrophenol	18	72–134		75–133	68–141
259	2,4-dinitrophenol-d3	66	22–308	ns-ns	39–256	17–378
335	2,4-dinitrotoluene	18	75–158		79–127	72–164
235	2,4-dinitrotoluene-d3	37	22–245	10–514	53–187	19–275
336	2,6-dinitrotoluene	30	80–141		55–183	70–159
236	2,6-dinitrotoluene-d3	59	44–184	17–442	36–278	31–250
369	Di-n-octyl phthalate	16	77–161		71–140	74–166
269	Di-n-octyl phthalate-d4	46	12–383	ns-ns	21–467	10–433
707	Diphenylamine (Appendix C)	45	58–205		57–176	51–231
607	Diphenylamine-d10	42	27–206	11–488	59–169	21–249
708	Diphenyl ether (Appendix C)	19	82–136		83–120	77–144
608	Diphenyl ether-d10	37	36–155	19–281	77–129	29–186
337	1,2-diphenylhydrazine	73	49–308		75–134	40–360
237	1,2-diphenylhydrazine-d10	35	31–173	17–316	58–174	26–200
339	Fluoranthene	33	71–177		67–149	64–194
239	Fluoranthene-d10	35	36–161	20–278	47–215	30–187
380	Fluorene	29	81–132		74–135	70–151
280	Fluorene-d10	43	51–131	27–238	61–164	38–172
309	Hexachlorobenzene	16	90–124		78–128	85–132
209	Hexachlorobenzene-13C6	81	36–228	13–595	38–265	23–321
352	hexachlorobutadiene	56	51–251		74–135	43–287
252	hexachlorobutadiene-13C4	63	ns–316	ns-ns	68–148	ns–413
312	hexachloroethane	227	21–ns		71–141	13–ns
212	hexachloroethane-13C1	77	ns–400	ns-ns	47–212	ns–563
353	hexachlorocyclopentadiene	15	69–144		77–129	67–148
253	hexachlorocyclopentadiene-13C4	60	ns-ns	ns-ns	47–211	ns-ns
083	ideno(1,2,3-cd)pyrene*	55	23–299		13–761	19–340
354	isophorone	25	76–156		70–142	70–168
254	isophorone-d8	23	49–133	33–193	52–194	44–147
360	2-methyl-4,6-dinitrophenol	19	77–133		69–145	72–142
260	2-methyl-4,6-dinitrophenol-d2	64	36–247	16–527	56–177	28–307
355	naphthalene	20	80–139		73–137	75–149
255	naphthalene-d8	39	28–157	14–305	71–141	22–192
702	B-naphthylamine (Appendix C)	49	10–ns		39–256	ns-ns
602	B-naphthylamine-d7	33	ns-ns	ns-ns	44–230	ns-ns
356	nitrobenzene	25	69–161		85–115	65–169
256	nitrobenzene-d5	28	18–265	ns-ns	46–219	15–314
357	2-nitrophenol	15	78–140		77–129	75–145
257	2-nitrophenol-d4	23	41–145	27–217	61–163	37–158
358	4-nitrophenol	42	62–146		55–183	51–175
258	4-nitrophenol-d4	188	14–398	ns-ns	35–287	ns-ns
061	N-nitrosodimethylamile*	198	21–472		40–249	12–807
063	N-nitrosodi-n-proplyamine*	198	21–472		40–249	12–807
362	N-nitrosodiphenylamine	45	65–142		68–148	53–173
262	N-nitrosodiphenylamine-d6	37	54–126	26–256	59–170	40–166
364	pentachlorophenol	21	76–140		77–130	71–150
264	pentachlorophenol-13C6	49	37–212	18–412	42–237	29–254
381	phenanthrene	13	93–119		75–133	87–126
281	phenanthrene-d10	40	45–130	24–241	67–149	34–168
365	phenol	36	77–127		65–155	62–154
265	phenol-d5	161	21–210	ns-ns	48–208	ns-ns
703	a-picoline (Synfuel)	38	59–149		60–165	50–174
603	a-picoline-d7	138	11–380	ns-ns	31–324	ns–608
384	pyrene	19	76–152		76–132	72–159
284	pyrene-d10	29	32–176	18–303	48–210	28–196
710	styrene (Appendix C)	42	53–221		65–153	48–244

TABLE 8—ACCEPTANCE CRITERIA FOR PERFORMANCE TESTS—Continued

EGD No. [1]	Compound	Acceptance criteria				
		Initial precision and accuracy section 8.2.3 (µg/L)		Labeled compound recovery sec. 8.3 and 14.2 P (percent)	Calibration verification sec. 12.5 (µg/mL)	On-going accuracy sec. 11.6 R (µg/L)
		s	X			
610	styrene-d5	49	ns–281	ns-ns	44–228	ns–348
709	a-terpineol (Appendix C)	44	42–234		54–186	38–258
609	a-terpineol-d3	48	22–292	ns–672	20–502	18–339
529	1,2,3-trichlorobenzene (4c)*	69	15–229		60–167	11–297
308	1,2,4-trichlorobenzene	19	82–136		78–128	77–144
208	1,2,4-trichlorobenzene-d3	57	15–212	ns–592	61–163	10–282
530	2,3,6-trichlorophenol (4c)*	30	58–137		56–180	51–153
531	2,4,5-trichlorophenol (4c)*	30	58–137		56–180	51–153
321	2,4,6-trichlorophenol	57	59–205		81–123	48–244
221	2,4,6-trichlorophenol-d2	47	43–183	21–363	69–144	34–226

[1] Reference numbers beginning with 0, 1 or 5 indicate a pollutant quantified by the internal standard method; reference numbers beginning with 2 or 6 indicate a labeled compound quantified by the internal standard method; reference numbers beginning with 3 or 7 indicate a pollutant quantified by isotope dilution.

* Measured by internal standard; specification derived from related compound.

ns=no specification; limit is outside the range that can be measured reliably.

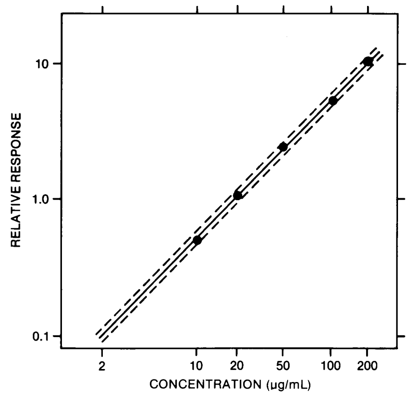

FIGURE 1 Relative Response Calibration Curve for Phenol. The Dotted Lines Enclose a ±10 Percent Error Window.

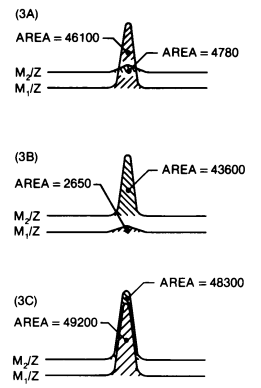

FIGURE 3 Extracted Ion Current Profiles for (3A) Unlabeled Compound, (3B) Labeled Compound, and (3C) Equal Mixture of Unlabeled and Labeled Compounds.

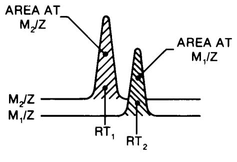

FIGURE 2 Extracted Ion Current Profiles for Chromatographically Resolved Labeled (m_2/z) and Unlabeled (m_1/z) Pairs.

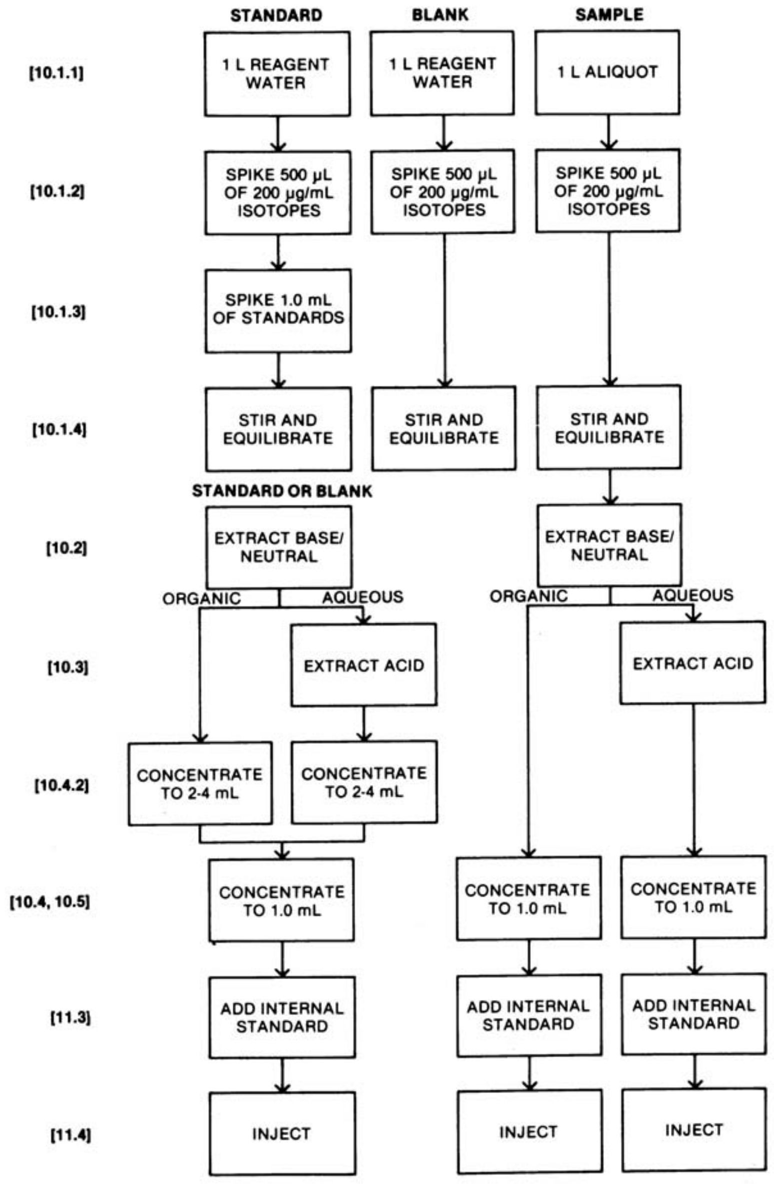

FIGURE 4 Flow Chart for Extraction/Concentration of Precision and Recovery Standard, Blank, and Sample by Method 1625. Numbers in Brackets [ ] Refer to Section Numbers in the Method.

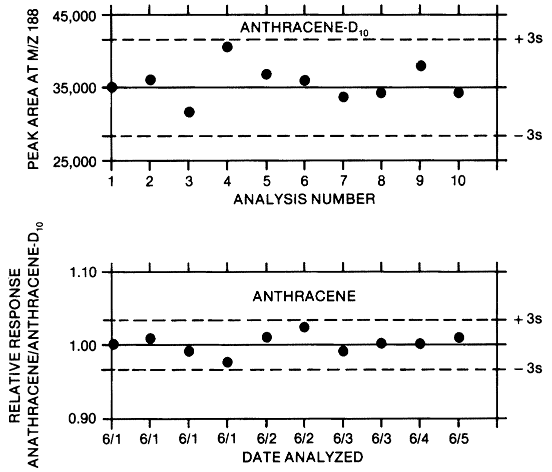

FIGURE 5 Quality Control Charts Showing Area (top graph) and Relative Response of Anthracene to Anthracene-d_{10} (lower graph) Plotted as a Function of Time or Analysis Number.

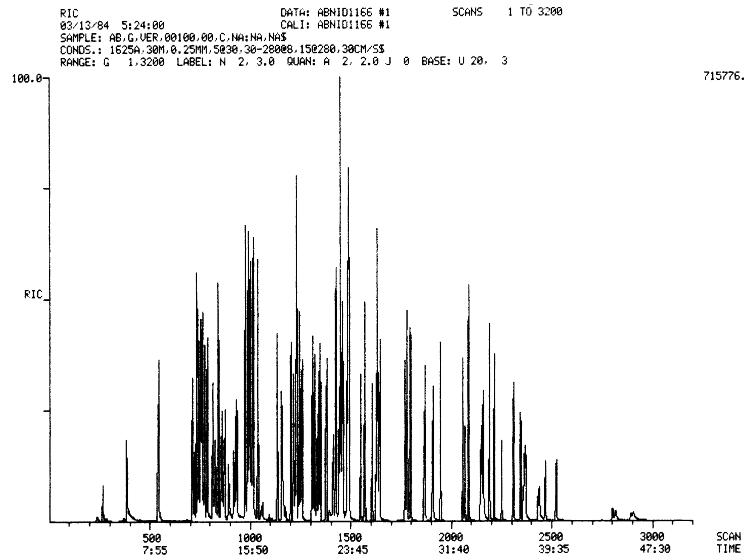

```
RIC                                       DATA: ABNID1166 #1         SCANS   1 TO 3200
03/13/84  5:24:00                         CALI: ABNID1166 #1
SAMPLE: AB,G,VER,00100,00,C,NA:NA,NA$
CONDS.: 1625A,30M,0.25MM,5@30,30-280@8,15@280,30CM/S$
RANGE: G   1,3200  LABEL: N  2, 3.0  QUAN: A  2, 2.0 J  0  BASE: U 20,  3
```

FIGURE 6 Chromatogram of Combined Acid/base/neutral Standard.

ATTACHMENT 1 TO METHOD 1625

INTRODUCTION

To support measurement of several semivolatile pollutants, EPA has developed this attachment to EPA Method 1625B.[1] The modifications listed in this attachment are approved only for monitoring wastestreams from the Centralized Waste Treatment Point Source Category (40 CFR part 437) and the Landfills Point Source Category (40 CFR part 445). EPA Method 1625B (the Method) employs sample extraction with methylene chloride followed by analysis of the extract using capillary column gas chromatography-mass spectrometry (GC/MS). This attachment addresses the addition of the semivolatile pollutants listed in Tables 1 and 2 to all applicable standard, stock, and spiking solutions utilized for the determination of semivolatile organic compounds by EPA Method 1625B.

1.0 EPA METHOD 1625 REVISION B MODIFICATION SUMMARY

The additional semivolatile organic compounds listed in Tables 1 and 2 are added to all applicable calibration, spiking, and other solutions utilized in the determination of semivolatile compounds by EPA Method 1625. The instrument is to be calibrated with these compounds, and all procedures and quality control tests described in the Method must be performed.

2.0 SECTION MODIFICATIONS

NOTE: All section and figure numbers in this Attachment reference section and figure numbers in EPA Method 1625 Revision B unless noted otherwise. Sections not listed here remain unchanged.

Section 6.7 The stock standard solutions described in this section are modified such that the analytes in Tables 1 and 2 of this attachment are required in addition to those specified in the Method.

Section 6.8 The labeled compound spiking solution in this section is modified to include the labeled compounds listed in Tables 5 and 6 of this attachment.

Section 6.9 The secondary standard is modified to include the additional analytes listed in Tables 1 and 2 of this attachment.

Section 6.12 The solutions for obtaining authentic mass spectra are to include all additional analytes listed in Tables 1 and 2 of this attachment.

Section 6.13 The calibration solutions are modified to include the analytes listed in Tables 1 and 2 and the labeled compounds listed in Tables 5 and 6 of this attachment.

Section 6.14 The precision and recovery standard is modified to include the analytes listed in Tables 1 and 2 and the labeled compounds listed in Tables 5 and 6 of this attachment.

Section 6.15 The solutions containing the additional analytes listed in Tables 1 and 2 of this attachment are to be analyzed for stability.

Section 7.2.1 This section is modified to include the analytes listed in Tables 1 and 2 and the labeled compounds listed in Tables 5 and 6 of this attachment.

Section 7.4.5 This section is modified to include the analytes listed in Tables 1 and 2 and the labeled compounds listed in Tables 5 and 6 in the calibration.

Section 8.2 The initial precision and recovery (IPR) requirements are modified to include the analytes listed in Tables 1 and 2 and the labeled compounds listed in Tables 5 and 6 of this attachment. Additional IPR performance criteria are supplied in Table 7 of this attachment.

Section 8.3 The labeled compounds listed in Tables 3 and 4 of this attachment are to be included in the method performance tests. Additional method performance criteria are supplied in Table 7 of this attachment.

Section 8.5.2 The acceptance criteria for blanks includes the analytes listed in Tables 1 and 2 of this attachment.

Section 10.1.2 The labeled compound solution must include the labeled compounds listed in Tables 5 and 6 of this attachment.

Section 10.1.3 The precision and recovery standard must include the analytes listed in Tables 1 and 2 and the labeled compounds listed in Tables 5 and 6 of this attachment.

Section 12.5 Additional QC requirements for calibration verification are supplied in Table 7 of this attachment.

Section 12.7 Additional QC requirements for ongoing precision and recovery are supplied in Table 7 of this attachment.

---

[1] EPA Method 1625 Revision B, Semivolatile Organic Compounds by Isotope Dilution GC/MS, 40 CFR part 136, appendix A.

Table 1—Base/Neutral Extractable Compounds

Compound	Pollutant	
	CAS Registry	EPA-EGD
acetophenone [1]	98–86–2	758
aniline [2]	62–53–3	757
-2,3-dichloroaniline [1]	608–27–5	578
-o-cresol [1]	95–48–7	771
pyridine [2]	110–86–1	1330

CAS = Chemical Abstracts Registry.
EGD = Effluent Guidelines Division.

[1] Analysis of this pollutant is approved only for the Centralized Waste Treatment industry.

[2] Analysis of this pollutant is approved only for the Centralized Waste Treatment and Landfills industries.

Table 2—Acid Extractable Compounds

Compound	Pollutant	
	CAS Registry	EPA-EGD
p-cresol [1]	106–44–5	1744

CAS = Chemical Abstracts Registry.
EGD = Effluent Guidelines Division.

[1] Analysis of this pollutant is approved only for the Centralized Waste Treatment and Landfills industries.

Table 3—Gas Chromatography [1] of Base/Neutral Extractable Compounds

EGD No.	Compound	Retention time [2]			Minimum level [3] (µg/L)
		Mean (sec)	EGD Ref	Relative	
758	acetophenone [4]	818	658	1.003–1.005	10
757	aniline [5]	694	657	0.994–1.023	10
578	2,3-dichloroaniline [4]	1160	164	1.003–1.007	10
771	o-cresol [4]	814	671	1.005–1.009	10
1330	pyridine [5]	378	1230	1.005–1.011	10

EGD = Effluent Guidelines Division.

[1] The data presented in this table were obtained under the chromatographic conditions given in the footnote to Table 3 of EPA Method 1625B.

[2] Retention times are approximate and are intended to be consistent with the retention times for the analytes in EPA Method 1625B.

[3] See the definition in footnote 2 to Table 3 of EPA Method 1625B.

[4] Analysis of this pollutant is approved only for the Centralized Waste Treatment industry.

[5] Analysis of this pollutant is approved only for the Centralized Waste Treatment and Landfills industries.

Table 4—Gas Chromatography [1] of Acid Extractable Compounds

EGD No.	Compound	Retention time [2]			Minimum level (µ/L) [3]
		Mean (sec)	EGD Ref	Relative	
1744	p-cresol [4]	834	1644	1.004–1.008	20

EGD = Effluent Guidelines Division.

[1] The data presented in this table were obtained under the chromatographic conditions given in the footnote to Table 4 of EPA Method 1625B.

[2] Retention times are approximate and are intended to be consistent with the retention times for the analytes in EPA Method 1625B.

[3] See the definition in footnote 2 to Table 4 of EPA Method 1625B.

[4] Analysis of this pollutant is approved only for the Centralized Waste Treatment and Landfills industries.

Table 5—Base/Neutral Extractable Compound Characteristic m/z's

Compound	Labeled Analog	Primary m/z [1]
acetophenone [2]	d_5	105/110
aniline [3]	d_7	93/100
o-cresol [2]	d_7	108/116
2,3-dichloroaniline [2]	n/a	161
pyridine [3]	d_5	79/84

m/z = mass to charge ratio.

[1] Native/labeled.

[2] Analysis of this pollutant is approved only for the Centralized Waste Treatment industry.

[3] Analysis of this pollutant is approved only for the Centralized Waste Treatment and Landfills industries.

TABLE 6—ACID EXTRACTABLE COMPOUND CHARACTERISTIC M/Z'S

Compound	Labeled Analog	Primary m/z[1]
p-cresol[2]	d_7	108/116

m/z = mass to charge ratio.

[1] Native/labeled.

[2] Analysis of this pollutant is approved only for the Centralized Waste Treatment and Landfills industries.

TABLE 7—ACCEPTANCE CRITERIA FOR PERFORMANCE TESTS

EGD No.	Compound	Acceptance criteria			Calibration verification sec. 12.5 µg/mL)	On-going accuracy sec. 12.7 R (µg/L)
		Initial precision and accuracy section 8.2 (µg/L)		Labeled compound recovery sec. 8.3 and 14.2 P (percent)		
		s (µg/L)	X			
758	acetophenone[1]	34	44–167		85–115	45–162
658	acetophenone-d_5[1]	51	23–254	45–162	85–115	22–264
757	aniline[2]	32	30–171		85–115	33–154
657	aniline-d_7[2]	71	15–278	33–154	85–115	12–344
771	o-cresol[1]	40	31–226		85–115	35–196
671	o-cresol-d_7[1]	23	30–146	35–196	85–115	31–142
1744	p-cresol[2]	59	54–140		85–115	37–203
1644	p-cresol-d_7[2]	22	11–618	37–203	85–115	16–415
578	2,3-dichloroaniline[1]	13	40–160		85–115	44–144
1330	pyridine[2]	28	10–421		83–117	18–238
1230	pyridine-d_5[2]	ns	7–392	19–238	85–115	4–621

s = Standard deviation of four recovery measurements.

X = Average recovery for four recovery measurements.

EGD = Effluent Guidelines Division.

ns = no specification; limit is outside the range that can be measured reliably.

[1] Analysis of this pollutant is approved only for the Centralized Waste Treatment industry.

[2] Analysis of this pollutant is approved only for the Centralized Waste Treatment and Landfills industries.

[49 FR 43261, Oct. 26, 1984; 50 FR 692, 695, Jan. 4, 1985, as amended at 51 FR 23702, June 30, 1986; 62 FR 48405, Sept. 15, 1997; 65 FR 3044, Jan. 19, 2000; 65 FR 81295, 81298, Dec. 22, 2000]

APPENDIX B TO PART 136—DEFINITION AND PROCEDURE FOR THE DETERMINATION OF THE METHOD DETECTION LIMIT—REVISION 1.11

Definition

The method detection limit (MDL) is defined as the minimum concentration of a substance that can be measured and reported with 99% confidence that the analyte concentration is greater than zero and is determined from analysis of a sample in a given matrix containing the analyte.

Scope and Application

This procedure is designed for applicability to a wide variety of sample types ranging from reagent (blank) water containing analyte to wastewater containing analyte. The MDL for an analytical procedure may vary as a function of sample type. The procedure requires a complete, specific, and well defined analytical method. It is essential that all sample processing steps of the analytical method be included in the determination of the method detection limit.

The MDL obtained by this procedure is used to judge the significance of a single measurement of a future sample.

The MDL procedure was designed for applicability to a broad variety of physical and chemical methods. To accomplish this, the procedure was made device- or instrument-independent.

Procedure

1. Make an estimate of the detection limit using one of the following:

(a) The concentration value that corresponds to an instrument signal/noise in the range of 2.5 to 5.

(b) The concentration equivalent of three times the standard deviation of replicate instrumental measurements of the analyte in reagent water.

(c) That region of the standard curve where there is a significant change in sensitivity, *i.e.*, a break in the slope of the standard curve.

(d) Instrumental limitations.

It is recognized that the experience of the analyst is important to this process. However, the analyst must include the above considerations in the initial estimate of the detection limit.

2. Prepare reagent (blank) water that is as free of analyte as possible. Reagent or interference free water is defined as a water sample in which analyte and interferent concentrations are not detected at the method detection limit of each analyte of interest. Interferences are defined as systematic errors in the measured analytical signal of an established procedure caused by the presence of interfering species (interferent). The interferent concentration is presupposed to be normally distributed in representative samples of a given matrix.

3. (a) If the MDL is to be determined in reagent (blank) water, prepare a laboratory standard (analyte in reagent water) at a concentration which is at least equal to or in the same concentration range as the estimated method detection limit. (Recommend between 1 and 5 times the estimated method detection limit.) Proceed to Step 4.

(b) If the MDL is to be determined in another sample matrix, analyze the sample. If the measured level of the analyte is in the recommended range of one to five times the estimated detection limit, proceed to Step 4.

If the measured level of analyte is less than the estimated detection limit, add a known amount of analyte to bring the level of analyte between one and five times the estimated detection limit.

If the measured level of analyte is greater than five times the estimated detection limit, there are two options.

(1) Obtain another sample with a lower level of analyte in the same matrix if possible.

(2) The sample may be used as is for determining the method detection limit if the analyte level does not exceed 10 times the MDL of the analyte in reagent water. The variance of the analytical method changes as the analyte concentration increases from the MDL, hence the MDL determined under these circumstances may not truly reflect method variance at lower analyte concentrations.

4. (a) Take a minimum of seven aliquots of the sample to be used to calculate the method detection limit and process each through the entire analytical method. Make all computations according to the defined method with final results in the method reporting units. If a blank measurement is required to calculate the measured level of analyte, obtain a separate blank measurement for each sample aliquot analyzed. The average blank measurement is subtracted from the respective sample measurements.

(b) It may be economically and technically desirable to evaluate the estimated method detection limit before proceeding with 4a. This will: (1) Prevent repeating this entire procedure when the costs of analyses are high and (2) insure that the procedure is being conducted at the correct concentration. It is quite possible that an inflated MDL will be calculated from data obtained at many times the real MDL even though the level of analyte is less than five times the calculated method detection limit. To insure that the estimate of the method detection limit is a good estimate, it is necessary to determine that a lower concentration of analyte will not result in a significantly lower method detection limit. Take two aliquots of the sample to be used to calculate the method detection limit and process each through the entire method, including blank measurements as described above in 4a. Evaluate these data:

(1) If these measurements indicate the sample is in desirable range for determination of the MDL, take five additional aliquots and proceed. Use all seven measurements for calculation of the MDL.

(2) If these measurements indicate the sample is not in correct range, reestimate the MDL, obtain new sample as in 3 and repeat either 4a or 4b.

5. Calculate the variance (S^2) and standard deviation (S) of the replicate measurements, as follows:

$$S^2 = \frac{1}{n-1}\left[\frac{\sum_{i=1}^{n} x_i^2 - \left(\sum_{i=1}^{n} X_i\right)^2}{n}\right]$$

$$S = \left(S^2\right)^{\frac{1}{2}}$$

where:

X_i; i=1 to n, are the analytical results in the final method reporting units obtained from the n sample aliquots and Σ refers to the sum of the X values from i=l to n.

6. (a) Compute the MDL as follows:

$$\text{MDL} = T_{(n\text{-}1,1\text{-}\alpha=0.99)} \quad (S)$$

where:
MDL = the method detection limit
$t_{(n\text{-}1,1\text{-}\alpha=.99)}$ = the students' t value appropriate for a 99% confidence level and a standard deviation estimate with n-1 degrees of freedom. See Table.
S = standard deviation of the replicate analyses.

(b) The 95% confidence interval estimates for the MDL derived in 6a are computed according to the following equations derived from percentiles of the chi square over degrees of freedom distribution (χ^2/df).

LCL = 0.64 MDL
UCL = 2.20 MDL
where: LCL and UCL are the lower and upper 95% confidence limits respectively based on seven aliquots.

7. Optional iterative procedure to verify the reasonableness of the estimate of the MDL and subsequent MDL determinations.

(a) If this is the initial attempt to compute MDL based on the estimate of MDL formulated in Step 1, take the MDL as calculated in Step 6, spike the matrix at this calculated MDL and proceed through the procedure starting with Step 4.

(b) If this is the second or later iteration of the MDL calculation, use S^2 from the current MDL calculation and S^2 from the previous MDL calculation to compute the F-ratio. The F-ratio is calculated by substituting the larger S^2 into the numerator S^2_A and the other into the denominator S^2_B. The computed F-ratio is then compared with the F-ratio found in the table which is 3.05 as follows: if $S^2_A/S^2_B<3.05$, then compute the pooled standard deviation by the following equation:

$$S_{\text{pooled}} = \left[\frac{6S_A^2 + 6S_B^2}{12}\right]^{\frac{1}{2}}$$

if $S^2_A/S^2_B>3.05$, respike at the most recent calculated MDL and process the samples through the procedure starting with Step 4. If the most recent calculated MDL does not permit qualitative identification when samples are spiked at that level, report the MDL as a concentration between the current and previous MDL which permits qualitative identification.

(c) Use the S_{pooled} as calculated in 7b to compute The final MDL according to the following equation:

$\text{MDL}=2.681\ (S_{\text{pooled}})$

where 2.681 is equal to $t_{(12,1-\alpha=.99)}$.

(d) The 95% confidence limits for MDL derived in 7c are computed according to the following equations derived from precentiles of the chi squared over degrees of freedom distribution.

LCL=0.72 MDL
UCL=1.65 MDL

where LCL and UCL are the lower and upper 95% confidence limits respectively based on 14 aliquots.

TABLES OF STUDENTS' T VALUES AT THE 99 PERCENT CONFIDENCE LEVEL

Number of replicates	Degrees of freedom (n-1)	$t_{cn-1,.99}$)
7	6	3.143
8	7	2.998
9	8	2.896
10	9	2.821
11	10	2.764
16	15	2.602
21	20	2.528
26	25	2.485
31	30	2.457
61	60	2.390
00	00	2.326

Reporting

The analytical method used must be specifically identified by number or title ald the MDL for each analyte expressed in the appropriate method reporting units. If the analytical method permits options which affect the method detection limit, these conditions must be specified with the MDL value. The sample matrix used to determine the MDL must also be identified with MDL value. Report the mean analyte level with the MDL and indicate if the MDL procedure was iterated. If a laboratory standard or a sample that contained a known amount analyte was used for this determination, also report the mean recovery.

If the level of analyte in the sample was below the determined MDL or exceeds 10 times the MDL of the analyte in reagent water, do not report a value for the MDL.

[49 FR 43430, Oct. 26, 1984; 50 FR 694, 696, Jan. 4, 1985, as amended at 51 FR 23703, June 30, 1986]

APPENDIX C TO PART 136—INDUCTIVELY COUPLED PLASMA—ATOMIC EMISSION SPECTROMETRIC METHOD FOR TRACE ELEMENT ANALYSIS OF WATER AND WASTES METHOD 200.7

1. *Scope and Application*

1.1 This method may be used for the determination of dissolved, suspended, or total elements in drinking water, surface water, and domestic and industrial wastewaters.

1.2 Dissolved elements are determined in filtered and acidified samples. Appropriate steps must be taken in all analyses to ensure that potential interferences are taken into account. This is especially true when dissolved solids exceed 1500 mg/L. (See Section 5.)

1.3 Total elements are determined after appropriate digestion procedures are performed. Since digestion techniques increase the dissolved solids content of the samples, appropriate steps must be taken to correct for potential interference effects. (See Section 5.)

1.4 Table 1 lists elements for which this method applies along with recommended wavelengths and typical estimated instrumental detection limits using conventional pneumatic nebulization. Actual working detection limits are sample dependent and as the sample matrix varies, these concentrations may also vary. In time, other elements may be added as more information becomes available and as required.

1.5 Because of the differences between various makes and models of satisfactory instruments, no detailed instrumental operating instructions can be provided. Instead, the analyst is referred to the instruction provided by the manufacturer of the particular instrument.

2. *Summary of Method*

2.1 The method describes a technique for the simultaneous or sequential multielement determination of trace elements in solution. The basis of the method is the measurement of atomic emission by an optical spectroscopic technique. Samples are nebulized and the aerosol that is produced is transported to the plasma torch where excitation occurs. Characteristic atomic-line emission spectra are produced by a radio-frequency inductively coupled plasma (ICP). The spectra are dispersed by a grating spectrometer and the intensities of the lines are monitored by photomultiplier tubes. The photocurrents from the photomultiplier tubes are processed and controlled by a computer system. A background correction technique is required to compensate for variable background contribution to the determination of trace elements. Background must be measured adjacent to analyte lines on samples during analysis. The position selected for the background intensity measurement, on either or both sides of the analytical line, will be determined by the complexity of the spectrum adjacent to the analyte line. The position used must be free of spectral interference and reflect the same change in background intensity as occurs at the analyte wavelength measured. Background correction is not required in cases of line broadening where a background correction measurement would actually degrade the analytical result. The possibility of additional interferences named in 5.1 (and tests for their presence as described in 5.2) should also be recognized and appropriate corrections made.

3. *Definitions*

3.1 *Dissolved*—Those elements which will pass through a 0.45 µm membrane filter.

3.2 *Suspended*—Those elements which are retained by a 0.45 µm membrane filter.

3.3 *Total*—The concentration determined on an unfiltered sample following vigorous digestion (Section 9.3), or the sum of the dissolved plus suspended concentrations. (Section 9.1 plus 9.2).

3.4 *Total recoverable*—The concentration determined on an unfiltered sample following treatment with hot, dilute mineral acid (Section 9.4).

3.5 *Instrumental detection limit*—The concentration equivalent to a signal, due to the analyte, which is equal to three times the standard deviation of a series of ten replicate measurements of a reagent blank signal at the same wavelength.

3.6 *Sensitivity*—The slope of the analytical curve, *i.e.*, functional relationship between emission intensity and concentration.

3.7 *Instrument check standard*—A multielement standard of known concentrations prepared by the analyst to monitor and verify instrument performance on a daily basis. (See 7.6.1)

3.8 *Interference check sample*—A solution containing both interfering and analyte elemelts of known concentration that can be used to verify background and interelement correction factors. (See 7.6.2.)

3.9 *Quality control sample*—A solution obtained from an outside source having known, concentration values to be used to verify the calibration standards. (See 7.6.3)

3.10 *Calibration standards*—A series of known standard solutions used by the analyst for calibration of the instrument (*i.e.*, preparation of the analytical curve). (See 7.4)

3.11 *Linear dynamic range*—The concentration range over which the analytical curve remains linear.

3.12 *Reagent blank*—A volume of deionized, distilled water containing the same acid matrix as the calibration standards carried through the entire analytical scheme. (See 7.5.2)

3.13 *Calibration blank*—A volume of deionized, distilled water acidified with HNO_3 and HCl. (See 7.5.1)

3.14 *Methmd of standard addition*— The standard addition technique involves the use of the unknown and the unknown plus a known amount of standard. (See 10.6.1.)

4. Safety

4.1 The toxicity of carcinogenicity of each reagent used in this method has not been precisely defined; however, each chemical compound should be treated as a potential health hazard. From this viewpoint, exposure to these chemicals must be reduced to the lowest possible level by whatever means available. The laboratory is repsonsible for maintaining a current awareness file of OSHA regulations regarding the safe handling of the chemicals specified in this method. A reference file of material data handling sheets should also be made available to all personnel involved in the chemical analysis. Additional references to laboratory safety are available and have been identified[(14.7,14.8 and 14.9)] for the information of the analyst.

5. Interferences

5.1 Several types of interference effects may contribute to inaccuracies in the determination of trace elements. They can be summarized as follows:

5.1.1 *Spectral interferences* can be categorized as (1) overlap of a spectral line from another element; (2) unresolved overlap of molecular band spectra; (3) background contribution from continuous or recombination phenomena; and (4) background contribution from stray light from the line emission of high concentration elements. The first of these effects can be compensated by utilizing a computer correction of the raw data, requiring the monitoring and measurement of the interfering element. The second effect may require selection of an alternate wavelength. The third and fourth effects can usually be compensated by a background correction adjacent to the analyte line. In addition, users of simultaneous multi-element instrumentation must assume the responsibility of verifying the absence of spectral interference from an element that could occur in a sample but for which there is no channel in the instrument array. Listed in Table 2 are some interference effects for the recommended wavelengths given in Table 1. The data in Table 2 are intended for use only as a rudimentary guide for the indication of potential spectral interferences. For this purpose, linear relations between concentration and intensity for the analytes and the interferents can be assumed. The Interference information, which was collected at the Ames Laboratory,[1] is expressed as analyte concentration equivalents (*i.e.*, false analyte concentrations) arising from 100 mg/L of the interferent element. The suggested use of this information is as follows: Assume that arsenic (at 193.696 nm) is to be determined in a sample containing approximately 10 mg/L of aluminum. According to Table 2, 100 mg/L of aluminum would yield a false signal for arsenic equivalent to approximately 1.3 mg/L. Therefore, 10 mg/L of aluminum would result in a false signal for arsenic equivalent to approximately 0.13 mg/L. The reader is cautioned that other analytical systems may exhibit somewhat different levels of interference than those shown in Table 2, and that the interference effects must be evaluated for each individual system.

Only those interferents listed were investigated and the blank spaces in Table 2 indicate that measurable interferences were not observed for the interferent concentrations listed in Table 3. Generally, interferences were discernible if they produced peaks or background shifts corresponding to 2–5% of the peaks generated by the analyte concentrations also listed in Table 3.

At present, information on the listed silver and potassium wavelengths are not available but it has been reported that second order energy from the magnesium 383.231 nm wavelength interferes with the listed potassium line at 766.491 nm.

5.1.2 *Physical interferences* are generally considered to be effects associated with the sample nebulization and transport processes. Such properties as change in viscosity and surface tension can cause significant inaccuracies especially in samples which may contain high dissolved solids and/or acid concentrations. The use of a peristaltic pump may lessen these interferences. If these types of interferences are operative, they must be reduced by dilution of the sample and/or utilization of standard addition techniques. Another problem which can occur from high dissolved solids is salt buildup at the tip of the nebulizer. This affects aersol flow rate causing instrumental drift. Wetting the argon prior to nebulization, the use of a tip washer, or sample dilution have been used to control this problem. Also, it has been reported that better control of the argon flow rate improves instrument performance. This is accomplished with the use of mass flow controllers.

---

[1] Ames Laboratory, USDOE, Iowa State University, Ames Iowa 50011.

5.1.3 *Chemical Interferences* are characterized by molecular compound formation, ionization effects and solute vaporization effects. Normally these effects are not pronounced with the ICP technique, however, if observed they can be minimized by careful selection of operating conditions (that is, incident power, observation position, and so forth), by buffering of the sample, by matrix matching, and by standard addition procedures. These types of interferences can be highly dependent on matrix type and the specific analyte element.

5.2 It is recommended that whenever a new or unusual sample matrix is encountered, a series of tests be performed prior to reporting concentration data for analyte elements. These tests, as outlined in 5.2.1 through 5.2.4, will ensure the analyst that neither positive nor negative interference effects are operative on any of the analyte elements thereby distorting the accuracy of the reported values.

5.2.1 *Serial dilution*. If the analyte concentration is sufficiently high (minimally a factor of 10 above the instrumental detection limit after dilution), an analysis of a dilution should agree within 5 percent of the original determination (or within some acceptable control limit (14.3) that has been established for that matrix.). If not, a chemical or physical interference effect should be suspected.

5.2.2 *Spike addition*. The recovery of a spike addition added at a minimum level of 10X the instrumental detection limit (maximum 100X) to the original determination should be recovered to within 90 to 110 percent or within the established control limit for that matrix. If not, a matrix effect should be suspected. The use of a standard addition analysis procedure can usually compensate for this effect.

Caution: The standard addition technique does not detect coincident spectral overlap. If suspected, use of computerized compensation, an alternate wavelength, or comparison with an alternate method is recommended (See 5.2.3).

5.2.3 *Comparison with alternate method of analysis*. When investigating a new sample matrix, comparison tests may be performed with other analytical techniques such as atomic absorption spectrometry, or other approved methodology.

5.2.4 *Wavelength scanning of analyte line region*. If the appropriate equipment is available, wavelength scanning can be performed to detect potential spectral interferences.

6. Apparatus

6.1 Inductively Coupled Plasma-Atomic Emission Spectrometer.

6.1.1 Computer controlled atomic emission spectrometer with background correction.

6.1.2 Radiofrequency generator.

6.1.3 Argon gas supply, welding grade or better.

6.2 Operating conditions—Because of the differences between various makes and models of satisfactory instruments, no detailed operating instructions can be provided. Instead, the analyst should follow the instructions provided by the manufacturer of the particular instrument. Sensitivity, instrumental detection limit, precision, linear dynamic range, and interference effects must be investigated and established for each individual analyte line on that particular instrument. It is the responsibility of the analyst to verify that the instrument configuration and operating conditions used satisfy the analytical requirements and to maintain quality control data confirming instrument performance and analytical results.

7. Reagents and Standards

7.1 Acids used in the preparation of standards and for sample processing must be ultra-high purity grade or equivalent. Redistilled acids are acceptable.

7.1.1 *Acetic acid*, conc. (sp gr 1.06).

7.1.2 *Hydrochloric acid*, conc. (sp gr 1.19).

7.1.3 *Hydrochloric acid*, (1+1): Add 500 mL conc. HCl (sp gr 1.19) to 400 mL deionized, distilled water and dilute to 1 liter.

7.1.4 *Nitric acid*, conc. (sp gr 1.41).

7.1.5 *Nitric acid*, (1+1): Add 500 mL conc. HNO_3 (sp gr 1.41) to 400 mL deionized, distilled water and dilute to 1 liter.

7.2 *Deionized, distilled water:* Prepare by passing distilled water through a mixed bed of cation and anion exchange resins. Use deionized, distilled water for the preparation of all reagents, calibration standards and as dilution water. The purity of this water must be equivalent to ASTM Type II reagent water of Specification D 1193 (14.6).

7.3 *Standard stock solutions* may be purchased or prepared from ultra high purity grade chemicals or metals. All salts must be dried for 1 h at 105 °C unless otherwise specified.

(CAUTION: Many metal salts are extremely toxic and may be fatal if swallowed. Wash hands thoroughly after handling.)

Typical stock solution preparation procedures follow:

7.3.1 *Aluminum solution, stock*, 1 mL=100µg Al: Dissolve 0.100 g of aluminum metal in an acid mixture of 4 mL of (1+1) HCl and 1 mL of conc. HNO_3 in a beaker. Warm gently to effect solution. When solution is complete, transfer quantitatively to a liter flask add an additional 10 mL of (1+1) HCl and dilute to 1,000 mL with deionized, distilled water.

7.3.2 *Antimony solution stock*, 1 mL=100 µg Sb: Dissolve 0.2669 g $K(SbO)C_4H_4O_6$ in deionized distilled water, add 10 mL (1+1) HCl and dilute to 1,000 mL with deionized, distilled water.

7.3.3 *Arsenic solution, stock,* 1 mL=100 µg As: Dissolve 0.1320 g of As_2O_3 in 100 mL of deionized, distilled water containing 0.4 g NaOH. Acidify the solution with 2 mL conc. HNO_3 and dilute to 1,000 mL with deionized, distilled water.

7.3.4 *Barium solution, stock,* 1 mL=100 µg Ba: Dissolve 0.1516 g $BaCl_2$ (dried at 250 °C for 2 hrs) in 10 mL deionized, distilled water with 1 mL (1+1) HCl. Add 10.0 mL (1+1) HCl and dilute to 1,000 with mL deionized, distilled water.

7.3.5 *Beryllium solution, stock,* 1 mL=100 µg Be: *Do not dry*. Dissolve 1.966 g $BeSO_4 \cdot 4H_2O$, in deionized, distilled water, add 10.0 mL conc. HNO_3 and dilute to 1,000 mL with deionized, distilled water.

7.3.6 *Boron solution, stock,* 1 mL=100µg B: *Do not dry*. Dissolve 0.5716 g anhydrous H_3BO_3 in deionized, distilled water and dilute to 1,000 mL. Use a reagent meeting ACS specifications, keep the bottle tightly stoppered and store in a desiccator to prevent the entrance of atmospheric moisture.

7.3.7 *Cadmium solution, stock,* 1 mL=100 µg Cd: Dissolve 0.1142 g CdO in a minimum amount of (1+1) HNO_3. Heat to increase rate of dissolution. Add 10.0 mL conc. HNO_3 and dilute to 1,000 mL with deionized, distilled water.

7.3.8 *Calcium solution, stock,* 1 mL=100 µg Ca: Suspend 0.2498 g $CaCO_3$ dried at 180 °C for 1 h before weighing in deionized, distilled water and dissolve cautiously with a minimum amount of (1+1) HNO_3. Add 10.0 mL conc. HNO_3 and dilute to 1,000 mL with deionized, distilled water.

7.3.9 *Chromium solution, stock,* 1 mL=100 µg Cr: Dissolve 0.1923 g of CrO_3 in deionized, distilled water. When solution is complete, acidify with 10 mL conc. HNO_3 and dilute to 1,000 mL with deionized, distilled water.

7.3.10 *Cobalt solution, stock,* 1 mL=100 µg Co: Dissolve 0.1000 g of cobalt metal in a minimum amount of (1+1) HNO_3. Add 10.0 mL (1+1) HCl and dilute to 1,000 mL with deionized, distilled water.

7.3.11 *Copper solution, stock,* 1 mL=100 µg Cu: Dissolve 0.1252 g CuO in a minimum amount of (1+1) HNO_3. Add 10.0 mL conc. HNO_3 and dilute to 1,000 mL with deionized, distilled water.

7.3.12 *Iron solution, stock,* 1 mL=100 µg Fe: Dissolve 0.1430 g Fe_2O_3 in a warm mixture of 20 mL (1+1) HCl and 2 mL of conc. HNO_3. Cool, add an additional 5 mL of conc. HNO_3 and dilute to 1,000 mL with deionized, distilled water.

7.3.13 *Lead solution, stock,* 1 mL=100 µg Pb: Dissolve 0.1599 g $Pb(NO_3)_2$ in a minimum amount of (1+1) HNO_3. Add 10.0 mL conc. HNO_3 and dilute to 1,000 mL with deionized, distilled water.

7.3.14 *Magnesium solution, stock,* 1 mL=100 µg Mg: Dissolve 0.1658 g MgO in a minimum amount of (1+1) HNO_3. Add 10.0 mL conc. HNO_3 and dilute to 1,000 mL with deionized, distilled water.

7.3.15 *Manganese solution, stock,* 1 mL=100 µg Mn: Dissolve 0.1000 g of manganese metal in the acid mixture 10 mL conc. HCl and 1 mL conc. HNO_3, and dilute to 1,000 mL with deionized, distilled water.

7.3.16 *Molybdenum solution, stock,* 1 mL=100 µg Mo: Dissolve 0.2043 g $(NH_4)_2 MoO_4$ in deionized, distilled water and dilute to 1,000 mL.

7.3.17 *Nickel solution, stock,* 1 mL=100 µg Ni: Dissolve 0.1000 g of nickel metal in 10 mL hot conc. HNO_3, cool and dilute to 1,000 mL with deionized, distilled water.

7.3.18 *Potassium solution, stock,* 1 mL=100 µg K: Dissolve 0.1907 g KCl, dried at 110 °C, in deionized, distilled water and dilute to 1,000 mL.

7.3.19 *Selenium solution, stock,* 1 mL=100 µg Se: *Do not dry*. Dissolve 0.1727 g H_2SeO_3 (actual assay 94.6%) in deionized, distilled water and dilute to 1,000 mL.

7.3.20 *Silica solution, stock,* 1 mL=100 µg SiO_2: *Do not dry*. Dissolve 0.4730 g $Na_2SiO_3 \cdot 9H_2O$ in deionized, distilled water. Add 10.0 mL conc. HNO_3 and dilute to 1,000 mL with deionized, distilled water.

7.3.21 *Silver solution, stock,* 1 mL=100 µg Ag: Dissolve 0.1575 g $AgNO_3$ in 100 mL of deionized, distilled water and 10 mL conc. HNO_3. Dilute to 1,000 mL with deionized, distilled water.

7.3.22 *Sodium solution, stock,* 1 mL=100 µg Na: Dissolve 0.2542 g NaCl in deionized, distilled water. Add 10.0 mL conc. HNO_3 and dilute to 1,000 mL with deionized, distilled water.

7.3.23 *Thallium solution, stock,* 1 mL=100 µg Tl: Dissolve 0.1303 g $TlNO_3$ in deionized, distilled water. Add 10.0 mL conc. HNO_3 and dilute to 1,000 mL with deionized, distilled water.

7.3.24 *Vanadium solution, stock,* 1 mL=100 µg V: Dissolve 0.2297 $NH_4 VO_3$ in a minimum amount of conc. HNO_3. Heat to increase rate of dissolution. Add 10.0 mL conc. HNO_3 and dilute to 1,000 mL with deionized, distilled water.

7.3.25 *Zinc solution, stock,* 1 mL=100 µg Zn: Dissolve 0.1245 g ZnO in a minimum amount of dilute HNO_3. Add 10.0 mL conc. HNO_3 and dilute to 1,000 mL deionized, distilled water.

7.4 *Mixed calibration standard solutions*—Prepare mixed calibration standard solutions by combining appropriate volumes of the stock solutions in volumetric flasks. (See 7.4.1 thru 7.4.5) Add 2 mL of (1+1) HNO_3 and 10 mL of (1+1) HCl and dilute to 100 mL with deionized, distilled water. (See Notes 1 and 6.) Prior to preparing the mixed standards, each stock solution should be analyzed separately to determine possible spectral interference or the presence of impurities. Care should be taken when preparing the mixed standards that the elemelts are compatible and stable. Transfer the mixed standard solutions to a FEP fluorocarbon or unused polyethylene bottle for storage. Fresh mixed standards should be prepared as needed with the realization that concentration can change on aging. Calibration standards must be initially verified using a quality control sample and monitored weekly for stability (See 7.6.3). Although not specifically required, some typical calibration standard combinations follow when using those specific wavelengths listed in Table 1.

7.4.1 *Mixed standard solution I*—Manganese, beryllium, cadmium, lead, and zinc.

7.4.2 *Mixed standard solution II*—Barium, copper, iron, vanadium, and cobalt.

7.4.3 *Mixed standard solution III*—Molybdenum, silica, arsenic, and selenium.

7.4.4 *Mixed standard solution IV*—Calcium, sodium, potassium, aluminum, chromium and nickel.

7.4.5 *Mixed standard solution V*— Antimony, boron, magnesium, silver, and thallium.

NOTE: 1. If the addition of silver to the recommended acid combination results in an initial precipitation, add 15 mL of deionized distilled water and warm the flask until the solution clears. Cool and dilute to 100 mL with deionized, distilled water. For this acid combination the silver concentration should be limited to 2 mg/L. Silver under these conditions is stable in a tap water matrix for 30 days. Higher concentrations of silver require additional HCl.

7.5 Two types of blanks are required for the analysis. The calibration blank (3.13) is used in establishing the analytical curve while the reagent blank (3.12) is used to correct for possible contamination resulting from varying amounts of the acids used in the sample processing.

7.5.1 *The calibration blank* is prepared by diluting 2 mL of (1+1) HNO_3 and 10 mL of (1+1) HCl to 100 mL with deionized, distilled water. (See Note 6.) Prepare a sufficient quantity to be used to flush the system between standards and samples.

7.5.2 *The reagent blank* must contain all the reagents and in the same volumes as used in the processing of the samples. The reagent blank must be carried through the complete procedure and contain the same acid concentration in the final solution as the sample solution used for analysis.

7.6 In addition to the calibration standards, an instrument check standard (3.7), an interference check sample (3.8) and a quality control sample (3.9) are also required for the analyses.

7.6.1 The *instrument check standard* is prepared by the analyst by combining compatible elements at a concentration equivalent to the midpoint of their respective calibration curves. (See 12.1.1.)

7.6.2 The *interference check sample* is prepared by the analyst in the following manner. Select a representative sample which contains minimal concentrations of the analytes of interest but known concentration of interfering elements that will provide an adequate test of the correction factors. Spike the sample with the elements of interest at the approximate concentration of either 100 µg/L or 5 times the estimated detection limits given in Table 1. (For effluent samples of expected high concentrations, spike at an appropriate level.) If the type of samples analyzed are varied, a synthetically prepared sample may be used if the above criteria and intent are met.

7.6.3 The *quality control sample* should be prepared in the same acid matrix as the calibration standards at a concentration near 1 mg/L and in accordance with the instructions provided by the supplier. The Quality Assurance Branch of EMSL-Cincinnati will either supply a quality control sample or information where one of equal quality can be procured. (See 12.1.3.)

8. Sample Handling and Preservation

8.1 For the determination of trace elements, contamination and loss are of prime concern. Dust in the laboratory environment, impurities in reagents and impurities on laboratory apparatus which the sample contacts are all sources of potential contamination. Sample containers can introduce either positive or negative errors in the measurement of trace elements by (a) contributing contaminants through leaching or surface desorption and (b) by depleting concentrations through adsorption. Thus the collection and treatment of the sample prior to analysis requires particular attention. Laboratory glassware including the sample bottle (whether polyethylene, polyproplyene or FEP-fluorocarbon) should be thoroughly washed with detergent and tap water; rinsed with (1+1) nitric acid, tap water, (1+1) hydrochloric acid, tap and finally deionized, distilled water in that order (See Notes 2 and 3).

NOTE: 2. Chromic acid may be useful to remove organic deposits from glassware; however, the analyst should be cautioned that the glassware must be thoroughly rinsed with water to remove the last traces of chromium. This is especially important if chromium is to be included in the analytical scheme. A commercial product, NOCHROMIX, available from Godax Laboratories, 6 Varick St., New York, NY 10013, may be used in place of chromic acid. Chromic acid should not be used with plastic bottles.

NOTE: 3. If it can be documented through an active analytical quality control program using spiked samples and reagent blanks, that certain steps in the cleaning procedure are not required for routine samples, those steps may be eliminated from the procedure.

8.2 Before collection of the sample a decision must be made as to the type of data desired, that is dissolved, suspended or total, so that the appropriate preservation and pretreatment steps may be accomplished. Filtration, acid preservation, etc., are to be performed at the time the sample is collected or as soon as possible thereafter.

8.2.1 For the determination of dissolved elements the sample must be filtered through a 0.45-µm membrane filter as soon as practical after collection. (Glass or plastic filtering apparatus are recommended to avoid possible contamination.) Use the first 50–100 mL to rinse the filter flask. Discard this portion and collect the required volume of filtrate. Acidify the filtrate with (1+1) HNO_3 to a pH of 2 or less. Normally, 3 mL of (1+1) acid per liter should be sufficient to preserve the sample.

8.2.2 For the determination of suspended elements a measured volume of unpreserved sample must be filtered through a 0.45-µm membrane filter as soon as practical after collection. The filter plus suspended material should be transferred to a suitable container for storage and/or shipment. No preservative is required.

8.2.3 For the determination of total or total recoverable elements, the sample is acidified with (1+1) HNO_3 to pH 2 or less as soon as possible, preferably at the time of collection. The sample is not filtered before processing.

9. Sample Preparation

9.1 For the determinations of dissolved elements, the filtered, preserved sample may often be analyzed as received. The acid matrix and concentration of the samples and calibration standards must be the same. (See Note 6.) If a precipitate formed upon acidification of the sample or during transit or storage, it must be redissolved before the analysis by adding additional acid and/or by heat as described in 9.3.

9.2 For the determination of suspended elements, transfer the membrane filter containing the insoluble material to a 150-mL Griffin beaker and add 4 mL conc. HNO_3. Cover the beaker with a watch glass and heat gently. The warm acid will soon dissolve the membrane. Increase the temperature of the hot plate and digest the material. When the acid has nearly evaporated, cool the beaker and watch glass and add another 3 mL of conc. HNO_3. Cover and continue heating until the digestion is complete, generally indicated by a light colored digestate. Evaporate to near dryness (2 mL), cool, and 10 mL HCl (1+1) and 15 mL deionized, distilled water per 100 mL dilution and warm the beaker gently for 15 min. to dissolve any precipitated or residue material. Allow to cool, wash down the watch glass and beaker walls with deionized distilled water and filter the sample to remove insoluble material that could clog the nebulizer. (See Note 4.) Adjust the volume based on the expected concentrations of elements present. This volume will vary depending on the elements to be determined (See Note 6). The sample is now ready for analysis. Concentrations so determined shall be reported as ''suspended.''

NOTE: 4. In place of filtering, the sample after diluting and mixing may be centrifuged or allowed to settle by gravity overnight to remove insoluble material.

9.3 For the determination of total elements, choose a measured volume of the well mixed acid preserved sample appropriate for the expected level of elements and transfer to a Griffin beaker. (See Note 5.) Add 3 mL of conc. HNO_3. Place the beaker on a hot plate and evaporate to near dryness cautiously, making certain that the sample does not boil and that no area of the bottom of the beaker is allowed to go dry. Cool the beaker and add another 5 mL portion of conc. HNO_3. Cover the beaker with a watch glass and return to the hot plate. Increase the temperature of the hot plate so that a gently reflux action occurs. Continue heating, adding additional acid as necessary, until the digestion is complete (generally indicated when the digestate is light in color or does not change in appearance with continued refluxing.) Again, evaporate to near dryness and cool the beaker. Add 10 mL of 1+1 HCl and 15 mL of deionized, distilled water per 100 mL of final solution and warm the beaker gently for 15 min. to dissolve any precipitate or residue resulting from evaporation. Allow to cool, wash down the beaker walls and watch glass with deionized distilled water and filter the sample to remove insoluble material that could clog the nebulizer. (See Note 4.) Adjust the sample to a predetermined volume based on the expected concentrations of elements present. The sample is now ready for analysis (See Note 6). Concentrations so determined shall be reported as ''total.''

NOTE: 5. If low determinations of boron are critical, quartz glassware should be used.

NOTE: 6. If the sample analysis solution has a different acid concentration from that given in 9.4, but does not introduce a physical interference or affect the analytical result, the same calibration standards may be used.

9.4 For the determination of total recoverable elements, choose a measured volume of a well mixed, acid preserved sample appropriate for the expected level of elements and transfer to a Griffin beaker. (See Note 5.) Add 2 mL of (1+1) HNO_3 and 10 mL of (1+1) HCl to the sample and heat on a steam bath or hot plate until the volume has been reduced to near 25 mL making certain the sample does not boil. After this treatment, cool the sample and filter to remove insoluble material that could clog the nebulizer. (See Note 4.) Adjust the volume to 100 mL and mix. The sample is now ready for analysis. Concentrations so determined shall be reported as ''total.''

10. Procedure

10.1 Set up instrument with proper operating parameters established in Section 6.2. The instrument must be allowed to become thermally stable before beginning. This usually requires at least 30 min. of operation prior to calibration.

10.2 Initiate appropriate operating configuration of computer.

10.3 Profile and calibrate instrument according to instrument manufacturer's recommended procedures, using the typical mixed calibration standard solutions described in Section 7.4. Flush the system with the calibration blank (7.5.1) between each standard. (See Note 7.) (The use of the average intensity of multiple exposures for both standardization and sample analysis has been found to reduce random error.)

NOTE: 7. For boron concentrations greater than 500 µg/L extended flush times of 1 to 2 minutes may be required.

10.4 Before beginning the sample run, reanalyze the highest mixed calibration standard as if it were a sample. Concentration values obtained should not deviate from the actual values by more than ±5 percent (or the established control limits whichever is lower). If they do, follow the recommendations of the instrument manufacturer to correct for this condition.

10.5 Begin the sample run flushing the system with the calibration blank solution (7.5.1) between each sample. (See Note 7.) Analyze the instrument check standard (7.6.1) and the calibration blank (7.5.1) each 10 samples.

10.6 If it has been found that methods of standard addition are required, the following procedure is recommended.

10.6.1 The standard addition technique (14.2) involves preparing new standards in the sample matrix by adding known amounts of standard to one or more aliquots of the processed sample solution. This technique compensates for a sample constitutent that enhances or depresses the analyte signal thus producing a different slope from that of the calibration standards. It will not correct for additive interference which causes a baseline shift. The simplest version of this technique is the single-addition method. The procedure is as follows. Two identical aliquots of the sample solution, each of volume V_X, are taken. To the first (labeled A) is added a small volume V_s of a standard analyte solution of concentration c_s. To the second (labeled B) is added the same volume V_s of the solvent. The analytical signals of A and B are measured and corrected for nonanalyte signals. The unknown sample concentration c_X is calculated:

$$c_x = \frac{S_B V_s c_s}{(S_A - S_B) V_x}$$

where S_A and S_B are the analytical signals (corrected for the blank) of solutions A and B, respectively. V_s and c_s should be chosen so that S_A is roughly twice S_B on the average. It is best if V_s is made much less than V_X, and thus c_s is much greater than c_X, to avoid excess dilution of the sample matrix. If a separation or concentration step is used, the additions are best made first and carried through the entire procedure. For the results from this technique to be valid, the following limitations must be taken into consideration:

1. The analytical curve must be linear.
2. The chemical form of the analyte added must respond the same as the analyte in the sample.
3. The interference effect must be constant over the working range of concern.
4. The signal must be corrected for any additive interference.

11. Calculation

11.1 Reagent blanks (7.5.2) should be subtracted from all samples. This is particularly important for digested samples requiring large quantities of acids to complete the digestion.

11.2 If dilutions were performed, the appropriate factor must be applied to sample values.

11.3 Data should be rounded to the thousandth place and all results should be reported in mg/L up to three significant figures.

12. Quality Control (Instrumental)

12.1 Check the instrument standardization by analyzing appropriate quality control check standards as follow:

12.1.1 Analyze and appropriate instrument check standard (7.6.1) containing the elements of interest at a frequency of 10%. This check standard is used to determine instrument drift. If agreement is not within ±5% of the expected values or within the established control limits, whichever is lower, the analysis is out of control. The analysis should be terminated, the problem corrected, and the instrument recalibrated.

Analyze the calibration blank (7.5.1) at a frequency of 10%. The result should be within the established control limits of 2 standard deviations of the meal value. If not, repeat the analysis two more times and average the three results. If the average is not wihin the control limit, terminate the analysis, correct the problem and recalibrate the instrument.

12.1.2 To verify interelement and background correction factors analyze the interference check sample (7.6.2) at the beginning, end, and at periodic intervals throughout the sample run. Results should fall within the established control limits of 1.5 times the standard deviation of the mean value. If not, terminate the analysis, correct the problem and recalibrate the instrument.

12.1.3 A quality control sample (7.6.3) obtained from an outside source must first be used for the initial verification of the calibration standards. A fresh dilution of this sample shall be analyzed every week thereafter to monitor their stability. If the results are not within ±5% of the true value listed for the control sample, prepare a new calibration standard and recalibrate the instrument. If this does not correct the problem, prepare a new stock standard and a new calibration standard and repeat the calibration.

13. Precision and Accuracy

13.1 An interlaboratory study of metal analyses by this method was conducted by the Quality Assurance Branch (QAB) of the Environmental Monitoring Systems Laboratory—Cincinnati (EMSL-CI). Synthetic concentrates containing various levels of the twenty-five elements listed in Table 4 were added to reagent water, surface water, drinking water and three effluents. These samples were digested by both the total digestion procedure (9.3) and the total recoverable procedure (9.4). Results for both digestions for the twenty-five elements in reagent water are given in Table 4; results for the other matrices can be found in Reference 14.10.

14. References

14.1 Winge, R.K., V.J. Peterson, and V.A. Fassel, ''Inductively Coupled Plasma-Atomic Emission Spectroscopy: Prominent Lines, EPA–600/4–79–017.

14.2 Winefordner, J.D., ''Trace Analysis: Spectroscopic Methods for Elements,'' *Chemical Analysis*, Vol, *46*, pp. 41–42.

14.3 Handbook for Analytical Quality Control in Water and Wastewater Laboratories, EPA–600/4–79–019.

14.4 Garbarino, J.R. and Taylor, H.E., ''An Inductively-Coupled Plasma Atomic Emission Spectrometric Method for Routine Water Quality Testing,'' Applied Spectroscopy *33*, No. 3 (1979).

14.5 ''Methods for Chemical Analysis of Water and Wastes,'' EPA–600/4–79–020.

14.6 Annual Book of ASTM Standards, Part 31.

14.7 ''Carcinogens—Working With Carcinogens,'' Department of Health, Education, and Welfare, Public Health Service, Center for Disease Control, National Institute for Occupational Safety and Health, Publication No. 77–206, August 1977.

14.8 ''OSHA Safety and Health Standards, General Industry,'' (29 CFR part 1910), Occupational Safety and Health Administration, OSHA 2206, (Revised, January 1976).

14.9 ''Safety in Academic Chemistry Laboratories, American Chemical Society Publication, Committee on Chemical Safety, 3rd Edition, 1979.

14.10 Maxfield R. and Minak B., ''EPA Method Study 27, Method 200.7 Trace Metals by ICP,'' National Technical Information Service, Order No. PB 85–248–656, November 1983.

TABLE 1—RECOMMENDED WAVELENGTHS [1] AND ESTIMATED INSTRUMENTAL DETECTION LIMITS

Element	Wavelength, nm	Estimated detection limit, µg/L [2]
Aluminum	308.215	45
Arsenic	193.696	53
Antimony	206.833	32
Barium	455.403	2
Beryllium	313.042	0.3
Boron	249.773	5
Cadmium	226.502	4
Calcium	317.933	10
Chromium	267.716	7
Cobalt	228.616	7
Copper	324.754	6
Iron	259.940	7
Lead	220.353	42
Magnesium	279.079	30
Manganese	257.610	2
Molybdenum	202.030	8
Nickel	231.604	15
Potassium	766.491	[3]
Selenium	196.026	75
Silica (SiO_2)	288.158	58
Silver	328.068	7
Sodium	588.995	29
Thallium	190.864	40
Vanadium	292.402	8
Zinc	213.856	2

[1] The wavelengths listed are recommended because of their sensitivity and overall acceptance. Other wavelengths may be substituted if they can provide the needed sensitivity and are treated with the same corrective techniques for spectral interference. (See 5.1.1).

[2] The estimated instrumental detection limits as shown are taken from ''Inductively Coupled Plasma-Atomic Emission Spectroscopy-Prominent Lines,'' EPA–600/4–79–017. They are given as a guide for an instrumental limit. The actual method detection limits are sample dependent and may vary as the sample matrix varies.

[3] Highly dependent on operating conditions and plasma position.

Table 1—Analyte Concentration Equivalents (mg/L) Arising From Interferents at the 100 mg/L Level

Analyte	Wave-length, nm	Interferent—									
		A1	Ca	Cr	Cu	Fe	Mg	Mn	Ni	Ti	V
Aluminum	308.214	....	....	....	....	....	....	0.21	....	....	1.4
Antimony	206.833	0.47	....	2.9	....	0.08	....	....	....	0.25	0.45
Arsenic	193.696	1.3	....	0.44	....	....	....	....	....	....	1.1
Barium	455.403	....	....	....	....	....	....	....	....	....	....
Beryllium	313.042	....	....	....	....	....	....	....	....	0.04	0.05
Boron	249.773	0.04	....	....	....	0.32	....	....	....	....	....
Cadmium	226.502	....	....	....	....	0.03	....	....	0.02	....	....
Calcium	317.933	....	....	0.08	....	0.01	0.01	0.04	....	0.03	0.03
Chromium	267.716	....	....	....	....	0.003	....	0.04	....	....	0.04
Cobalt	228.616	....	....	0.03	....	0.005	....	....	0.03	0.15	....
Copper	324.754	....	....	....	....	0.003	....	....	....	0.05	0.02
Iron	259.940	....	....	....	....	....	....	0.12	....	....	....
Lead	220.353	0.17	....	....	....	....	....	....	....	....	....
Magnesium	279.079	....	0.02	0.11	....	0.13	....	0.25	....	0.07	0.12
Manganese	257.610	0.005	....	0.01	....	0.002	0.002	....	....	....	....
Molybdenum	202.030	0.05	....	....	....	0.03	....	....	....	....	....
Nickel	231.604	....	....	....	....	....	....	....	....	....	....
Selenium	196.026	0.23	....	....	....	0.09	....	....	....	....	....
Silicon	288.158	....	....	0.07	....	....	....	....	....	....	0.01
Sodium	588.995	....	....	....	....	....	....	....	....	0.08	....
Thallium	190.864	0.30	....	....	....	....	....	....	....	....	....
Vanadium	292.402	....	....	0.05	....	0.005	....	....	....	0.02	....
Zinc	213.856	....	....	....	0.14	....	....	....	0.29	....	....

Table 3—Interferent and Analyte Elemental Concentrations Used for Interference Measuremelts in Table 2

	Analytes	(mg/L)		Interferents	(mg/L)	
	Al	10		Al	1,000	
	AS	10		Ca	1,000	
	B	10		Cr	200	
	Ba	1		Cu	200	
	Be	1		Fe	1,000	
	Ca	1		Mg	1,000	
	Cd	10		Mn	200	
	Co	1		Ni	200	
	Cr	1		Ti	200	
	Cu	1		V	200	
	Fe	1				
	Mg	1				
	Mn	1				
	Mo	10				
	Na	10				
	Ni	10				
	Pb	10				
	Sb	10				
	Se	10				
	Si	1				
	Tl	10				
	V	1				
	Zn	10				

Table 4—ICP Precision and Recovery Data

Analyte	Concentration µg/L	Total digestion (9.3) µg/L	Recoverable digestion (9.4) µg/L
Aluminum	69–4792	X=0.9273(C)+3.6 S=0.0559(X)+18.6 SR=0.0507(X)+3.5	X=0.9380(C)+22.1 S=0.0873(X)+31.7 SR=0.0481(X)+18.8
Antimony	77–1406	X=0.7940(C) − 17.0 S=0.1556(X) − 0.6 SR=0.1081(X)+3.9	X=0.8908(C)+0.9 S=0.0982(X)+8.3 SR=0.0682(X)+2.5
Arsenic	69–1887	X=1.0437(C) − 12.2 S=0.1239(X)+2.4 SR=0.0874(X)+6.4	X=1.0175(C)+3.9 S=0.1288(X)+6.1 SR=0.0643(X)+10.3

TABLE 4—ICP PRECISION AND RECOVERY DATA—Continued

Analyte	Concentration µg/L	Total digestion (9.3) µg/L	Recoverable digestion (9.4) µg/L
Barium	9–377	X=0.7683(C)+0.47 S=0.1819(X)+2.78 SR=0.1285(X)+2.55	X=0.8380(C)+1.68 S=0.2540(X)+0.30 SR=0.0826(X)+3.54
Beryllium	3–1906	X=0.9629(C)+0.05 S=0.0136(X)+0.95 SR=0.0203(X) − 0.07	X=1.0177(C) − 0.55 S=0.0359(X)+0.90 SR=0.0445(X) − 0.10
Boron	19–5189	X=0.8807(C)+9.0 S=0.1150(X)+14.1 SR=0.0742(X)+23.2	X=0.9676(C)+18.7 S=0.1320(X)+16.0 SR=0.0743(X)+21.1
Cadmium	9–1943	X=0.9874(C) − 0.18 S=0.557(X)+2.02 SR=0.0300(X)+0.94	X=1.0137(C) − 0.65 S=0.0585(X)+1.15 SR=0.332(X)+0.90
Calcium	17–47170	X=0.9182(C) − 2.6 S=0.1228(X)+10.1 SR=0.0189(X)+3.7	X=0.9658(C)+0.8 S=0.0917(X)+6.9 SR=0.0327(X)+10.1
Chromium	13–1406	X=0.9544(C)+3.1 S=0.0499(X)+4.4 SR=0.0009(X)+7.9	X=1.0049(C) − 1.2 S=0.0698(X)+2.8 SR=0.0571(X)+1.0
Cobalt	17–2340	X=0.9209(C) − 4.5 S=0.0436(X)+3.8 SR=0.0428(X)+0.5	X=0.9278(C) − 1.5 S=0.0498(X)+2.6 SR=0.0407(X)+0.4
Copper	8–1887	X=0.9297(C) − 0.30 S=0.0442(X)+2.85 SR=0.0128(X)+2.53	X=0.9647(C) − 3.64 S=0.0497(X)+2.28 SR=0.0406(X)+0.96
Iron	13–9359	X=0.8829(C)+7.0 S=0.0683(X)+11.5 SR=0.0046(X)+10.0	X=0.9830(C)+5.7 S=0.1024(X)+13.0 SR=0.0790(X)+11.5
Lead	42–4717	X=0.9699(C) − 2.2 S=0.0558(X)+7.0 SR=0.0353(X)+3.6	X=1.0056(C)+4.1 S=0.0779(X)+4.6 SR=0.0448(X)+3.5
Magnesium	34–13868	X=0.9881(C) − 1.1 S=0.0607(C)+11.6 SR=0.0298(X)+0.6	X=0.9879(C)+2.2 S=0.0564(X)+13.2 SR=0.0268(X)+8.1
Manganese	4–1887	X=0.9417(C)+0.13 S=0.0324(X)+0.88 SR=0.0153(X)+0.91	X=0.9725(C)+0.07 S=0.0557(X)+0.76 SR=0.0400(X)+0.82
Molybdenum	17–1830	X=0.9682(C)+0.1 S=0.0618(X)+1.6 SR=0.0371(X)+2.2	X=0.9707(C) − 2.3 S=0.0811(X)+3.8 SR=0.0529(X)+2.1
Nickel	17–47170	X=0.9508(C)+0.4 S=0.0604(X)+4.4 SR=0.0425(X)+3.6	X=0.9869(C)+1.5 S=0.0526(X)+5.5 SR=0.0393(X)+2.2
Potassium	347–14151	X=0.8669(C) − 36.4 S=0.0934(X)+77.8 SR=0.0099(X)+144.2	X=0.9355(C) − 183.1 S=0.0481(X)+177.2 SR=0.0329(X)+60.9
Selenium	69–1415	X=0.9363(C) − 2.5 S=0.0855(X)+17.8 SR=0.0284(X)+9.3	X=0.9737(C) − 1.0 S=0.1523(X)+7.8 SR=0.0443(X)+6.6
Silicon	189–9434	X=0.5742(C) − 35.6 S=0.4160(X)+37.8 SR=0.1987(X)+8.4	X=0.9737(C) − 60.8 S=0.3288(X)+46.0 SR=0.2133(X)+22.6
Silver	8–189	X=0.4466(C)+5.07 S=0.5055(X) − 3.05 SR=0.2086(X) − 1.74	X=0.3987(C)+8.25 S=0.5478(X) − 3.93 SR=0.1836(X) − 0.27
Sodium	35–47170	X=0.9581(C)+39.6 S=0.2097(X)+33.0 SR=0.0280(X)+105.8	X=1.0526(C)+26.7 S=0.1473(X)+27.4 SR=0.0884(X)+50.5
Thallium	79–1434	X=0.9020(C) − 7.3 S=0.1004(X)+18.3 SR=0.0364(X)+11.5	X=0.9238(C)+5.5 S=0.2156(X)+5.7 SR=0.0106(X)+48.0
Vanadium	13–4698	X=0.9615(C) − 2.0 S=0.0618(X)+1.7 SR=0.0220(X)+0.7	X=0.9551(C)+0.4 S=0.0927(X)+1.6 SR=0.0472(X)+0.5
Zinc	7–7076	X=0.9356(C) − 0.30 S=0.0914(X)+3.75 SR=0.0130(X)+10.7	X=0.9500(C)+1.82 S=0.0597(X)+6.50 SR=0.0153(X)+7.78

AAAAAX=Mean Recovery, µg/L
AAAAAC=True Value for the Concentration, µg/L
AAAAAS=Multi-laboratory Standard Deviation, µg/L
SR=Single-analyst Standard Deviation, µg/L

[49 FR 43431, Oct. 26, 1984; 50 FR 695, 696, Jan. 4, 1985, as amended at 51 FR 23703, June 30, 1986; 55 FR 33440, Aug. 15, 1990]

APPENDIX D TO PART 136—PRECISION AND RECOVERY STATEMENTS FOR METHODS FOR MEASURING METALS

Twenty-eight selected methods from ''Methods for Chemical Analysis of Water and Wastes,'' EPA–600/4–79–020 (1979) have been subjected to interlaboratory method validation studies. The following precision and recovery statements are presented in this appendix and incorporated into part 136:

Method 202.1

For Aluminum, Method 202.1 (Atomic Absorption, Direct Aspiration) replace the Precision and Accuracy Section with the following:

Precision and Accuracy

An interlaboratory study on metal analyses by this method was conducted by the Quality Assurance Branch (QAB) of the Environmental Monitoring Systems Laboratory—Cincinnati (EMSL-CI). Synthetic concentrates containing various levels of this element were added to reagent water and a natural water or effluent of the analyst's choice. The digestion procedure was not specified. Results for the reagent water are given below. Results for other water types and study details are found in ''USEPA Method Study 7, Analyses for Trace Methods in water by Atomic Absorption Spectroscopy (Direction Aspiration) and Colorimetry'', National Technical Information Service, 5285 Port Royal Road, Springfield, VA 22161, Order No. PB86–208709/AS, Winter, J.A. and Britton, P.W., June, 1986.

For a concentration range of 500–1200 μg/L

X=0.979(C)+6.16
S=0.066(X)+125
SR=0.086(X)+40.5

where:

C=True Value for the Concentration, μg/L
X=Mean Recovery, μg/L
S=Multi-laboratory Standard Deviation, μg/L
SR=Single-analyst Standard Deviation, μg/L

Method 206.4

For Arsenic, Method 206.4 (Spectrophotometric-SDDC) add the following to the Precision and Accuracy Section:

Precision and Accuracy

An interlaboratory study on metal analyses by this method was conducted by the Quality Assurance Branch (QAB) of the Environmental Monitoring Systems Laboratory—Cincinnati (EMSL-CI). Synthetic concentrates containing various levels of this element were added to reagent water and a natural water or effluent of the analyst's choice. Results for the reagent water are given below. Results for other water types and study details are found in ''USEPA Method Study 7, Analyses for Trace Methods in Water by Atomic Absorption Spectroscopy (Direct Aspiration) and Colorimetry'', National Technical Information Service, 5285 Port Royal Road, Springfield, VA 22161, Order No. PB86–208709/AS, Winter, J.A. and Britton, P.W., June, 1986.

For a concentration range of 20–292 μg/L

X=0.850(C)−0.25
S=0.198(X)+5.93
SR=0.122(X)+3.10

where:

C=True Value for the Concentration, μg/L
X=Mean Recovery, μg/L
S=Multi-laboratory Standard Deviation, μg/L
SR=Single-analyst Standard Deviation, μg/L

Method 213.1

For Cadmium, Method 213.1 (Atomic Absorption, Direct Aspiration) replace the Precision and Accuracy Section with the following:

Precision and Accuracy

An interlaboratory study on metal analyses by this method was conducted by the Quality Assurance Branch (QAB) of the Environmental Monitoring Systems Laboratory—Cincinnati (EMSL-CI). Synthetic concentrates containing various levels of this element were added to reagent water and a natural water or effluent of the analyst's choice. The digestion procedure was not specified. Results for the reagent water are given below. Results for other water types and study details are found in ''USEPA Method Study 7, Analyses for Trace Methods in Water by Atomic Absorption Spectroscopy (Direct Aspiration) and Colorimetry'', National Technical Information Service, 5285 Port Royal Road, Springfield, VA 22161, Order No. PB86–208709/AS, Winter, J.A. and Britton, P.W., June, 1986.

For a concentration range of 14–78 μg/L

X=0.919(C)+2.97
S=0.108(X)+5.08
SR=0.120(X)+0.89

where:

C=True Value for the Concentration, μg/L
X=Mean Recovery, μg/L
S=Multi-laboratory Standard Deviation, μg/L
SR=Single-analyst Standard Deviation, μg/L

Method 218.1

For Chromium, Method 218.1 (Atomic Absorption, Direct Aspiration) replace the Precision and Accuracy Section with the following:

Precision and Accuracy

An interlaboratory study on metal analyses by this method was conducted by the Quality Assurance Branch (QAB) of the Environmental Monitoring Systems Laboratory—Cincinnati (EMSL-CI). Synthetic concentrates containing various levels of this element were added to reagent water and a natural water or effluent of the analyst's choice. The digestion procedure was not specified. Results for the reagent water are given below. Results for other water types and study details are found in "USEPA Method Study 7, Analyses for Trace Methods in Water by Atomic Absorption Spectroscopy (Direct Aspiration) and Colorimetry", National Technical Information Service, 5285 Port Royal Road, Springfield, VA 22161, Order No. PB86–208709/AS, Winter, J.A. and Britton, P.W., June 1986.

For a concentration range of 74–407 μg/L

X=0.976(C)+3.94
S=0.131(X)+4.26
SR=0.052(X)+3.01

where:

C=True Value for the Concentration, μg/L
X=Mean Recovery, μg/L
S=Multi-laboratory Standard Deviation, μg/L
SR=Single-analyst Standard Deviation, μg/L

Method 220.1

For Copper, Method 220.1 (Atomic Absorption, Direct Aspiration) replace the Precision and Accuracy Section with the following:

Precision and Accuracy

An interlaboratory study on metal analyses by this method was conducted by the Quality Assurance Branch (QAB) of the Environmental Monitoring Systems Laboratory—Cincinnati (EMSL-CI). Synthetic concentrates containing various levels of this element were added to reagent water and a natural water or effluent of the analyst's choice. The digestion procedure was not specified. Results for the reagent water are given below. Results for other water types and study details are found in "USEPA Method Study 7, Analyses for Trace Methods in Water by Atomic Absorption Spectroscopy (Direct Aspiration) and Colorimetry", National Technical Information Service, 5285 Port Royal Road, Springfield, VA 22161, Order No. PB86–208709/AS, Winter, J.A. and Britton, P.W., June, 1986.

For concentration range 60–332 μg/L

X=0.963(C)+3.49
S=0.047(X)+12.3
SR=0.042(X)+4.60

where:

C=True Value for the Concentration, μg/L
X=Mean Recovery, μg/L
S=Multi-laboratory Standard Deviation, μg/L
SR=Single-analyst Standard Deviation, μg/L

Method 236.1

For Iron, Method 236.1 (Atomic Absorption, Direct Aspiration) replace the Precision and Accuracy Section with the following:

Precision and Accuracy

An interlaboratory study on metal analyses by this method was conducted by the Quality Assurance Branch (QAB) of the Environmental Monitoring Systems Laboratory—Cincinnati (EMSL-CI). Synthetic concentrates containing various levels of this element were added to reagent water and a natural water or effluent of the analyst's choice. The digestion procedure was not specified. Results for the reagent water are given below. Results for other water types and study details are found in "USEPA Method Study 7, Analyses for Trade Methods in Water by Atomic Absorption Spectroscopy (Direct Aspiration) and Colorimetry", National Technical Information Service, 5285 Port Royal Road, Springfield, VA 22161, Order No. PB86–208709/AS, Winter, J.A. and Britton, P.W., June, 1986.

For concentration range 350–840 μg/L

X=0.999(C)−2.21
S=0.022(X)+41.0
SR=0.019(X)+21.2

where:

C=True Value for the Concentration, μg/L
X=Mean Recovery, μg/L
S=Multi-Laboratory Standard Deviation, μg/L
SR=Single-analyst Standard Deviation, μg/L

Method 239.1

For Lead, Method 239.1 (Atomic Absorption, Direct Aspiration) replace Precision and Accuracy Section with the following:

Precision and Accuracy

An interlaboratory study on metal analyses by this method was conducted by the Quality Assurance Branch (QAB) of the Environmental Monitoring Systems Laboratory—Cincinnati (EMSL-CI). Synthetic concentrates containing various levels of this element were added to reagent water and a natural water or effluent of the analyst's choice. The digestion procedure was not specified. Results for the reagent water are given below. Results for other water types and study details are found in "USEPA Method Study 7 Analyses for Trace Methods in Water by Atomic Absorption Spectroscopy

(Direct Aspiration) and Colorimetry''; National Technical Information Service, 5285 Port Royal Road, Springfield, VA 22161, Order No. PB86–208709/AS, Winter, J.A. and Britton, P.W., June, 1986.

For concentration range of 84–367 μg/L

X=0.961(C)+13.8
S=0.028(C)+33.9
SR=0.011(X)+16.1

where:

C=True Value for the Concentration, μg/L
X=Mean Recovery, μg/L
S=Multi-laboratory Standard Deviation, μg/L
SR=Single-analyst Standard Deviation, μg/L

Method 243.1

For Manganese, Method 243.1 (Atomic Absorption, Direct Aspiration) replace Precision and Accuracy Section with the following:

Precision and Accuracy

An interlaboratory study on metal analyses by this method was conducted by the Quality Assurance Branch (QAB) of the Environmental Monitoring Systems Laboratory—Cincinnati (EMSL-CI). Synthetic concentrates containing various levels of this element were added to reagent water and a natural water or effluent of the analyst's choice. The digestion procedure was not specified. Results for the reagent water are given below. Results for other water types and study details are found in ''USEPA Method Study 7, Analyses for Trace Methods in Water by Atomic Absorption Spectroscopy (Direct Aspiration) and Colorimetry'', National Technical Information Service, 5285 Port Royal Road, Springfield, VA 22161, Order No. PB86–208709/AS, Winter, J.A. and Britton, P.W., June, 1986.

For concentration range 84–469 μg/L

X=0.987(C) − 1.27
S=0.042(X)+8.95
SR=0.023(X)+4.90

where:

C=True Value for the Concentration, μg/L
X=Mean Recovery, μg/L
S=Multi-laboratory Standard Deviation, μg/L
SR=Single-analyst Standard Deviation, μg/L

Method 289.1

For Zinc, Method 289.1 (Atomic Absorption, Direct Aspiration) replace the Precision and Accuracy Section with the following:

Precision and Accuracy

An interlaboratory study on metal analyses by this method was conducted by the Quality Assurance Branch (QAB) of the Environmental Monitoring Systems Laboratory-Cincinnati (EMSL-CI). Synthetic concentrates containing various levels of this element were added to reagent water and a natural water or effluent of the analyst's choice. The digestion procedure was not specified. Results for the reagent water are given below. Results for other water types and study details are found in ''USEPA Method Study 7, Analyses for Trace Methods in Water by Atomic Absorption Spectroscopy (Direct Aspiration) and Colorimetry'', National Technical Information Service, 5285 Port Royal Road, Springfield, VA 22161, Order No. PB86–208709/AS, Winter, J. A. and Britton, P. W., June, 1986.

For concentration range 56–310 μg/L

X=0.999(C)+0.033
S=0.078(X)+10.8
SR=0.049(X)+1.10

where:

C=True Value for the Concentration, μg/L
X=Mean Recovery, μg/L
S=Multi-laboratory Standard Deviation, μg/L
SR=Single-analyst Standard Deviation, μg/L

Method 202.2

For Aluminum, Method 202.2 (Atomic Absorption, Furnace Technique) replace the Precision and Accuracy Section statement with the following:

Precision and Accuracy

An interlaboratory study on metal analyses by this method was conducted by the Quality Assurance Branch (QAB) of the Environmental Monitoring Systems Laboratory-Cincinnati (EMSL-CI). Synthetic concentrates containing various levels of this element were added to reagent water, surface water, drinking water and three effluents. These samples were digested by the total digestion procedure, 4.1.3 in this manual. Results for the reagent water are given below. Results for other water types and study details are found in ''EPA Method Study 31, Trace Metals by Atomic Absorption (Furnace Techniques), ''National Technical Information Service, 5285 Port Royal Road, Springfield, VA 22161, Order No. PB 86–121 704/AS, by Copeland, F.R. and Maney, J.P., January 1986.

For a concentration range of 0.46 − 125 μg/L

X=1.1579(C) − 0.121
S=0.4286(X) − 0.124
SR=0.2908(X) − 0.082

where:

C=True Value for the Concentration, μg/L
X=Mean Recovery, μg/L
S=Multi-laboratory Standard Deviation, μg/L
SR=Single-analyst Standard Deviation, μg/L

Method 204.2

For Antimony, Method 204.2 (Atomic Absorption, Furnace Technique) replace the Precision and Accuracy Section statement with the following:

Precision and Accuracy

An interlaboratory study on metal analyses by this method was conducted by the Quality Assurance Branch (QAB) of the Environmental Monitoring Systems Laboratory-Cincinnati (EMSL-CI). Synthetic concentrates containing various levels of this element were added to reagent water, surface water, drinking water and three effluents. These samples were digested by the total digestion procedure, 4.1.3 in this manual as modified by this method. Results for the reagent water are given below. Results for other water types and study details are found in “EPA Method Study 31, Trace Metals by Atomic Absorption (Furnace Techniques),” National Technical Information Service, 5285 Port Royal Road, Springfield, VA 22161, Order No. PB 86–121 704/AS, by Copeland, F.R. and Maney, J.P., January 1986.

For a concentration range of 10.50−240 µg/L
$X=0.7219(C)-0.986$
$S=0.3732(X)+0.854$
$SR=0.1874(X)-0.461$

where:

C=True Value for the Concentration, µg/L
X=Mean Recovery, µg/L
S=Multi-laboratory Standard Deviation, µg/L
SR=Single-analyst Standard Deviation, µg/L

Method 206.2

For Arsenic, Method 206.2 (Atomic Absorption, Furnace Technique) add the following to the existing Precision and Accuracy statement:

Precision and Accuracy

An interlaboratory study on metal analyses by this method was conducted by the Quality Assurance Branch (QAB) of the Environmental Monitoring Systems Laboratory-Cincinnati (EMSL-CI). Synthetic concentrates containing various levels of this element were added to reagent water, surface water, drinking water and three effluents. Results for the reagent water are given below. Results for other water types and study details are found in “EPA Method Study 31, Trace Metals by Atomic Absorption (Furnace Techniques),” National Technical Information Service, 5285 Port Royal Road, Springfield, VA 22161, Order No. PB 86–121 704/AS, by Copeland, F.R. and Maney, J.P., January 1986.

For a concentration range of 9.78−237 µg/L
$X=0.9652(C)+2.112$
$S=0.1411(X)+1.873$
$SR=0.0464(X)+2.109$

where:

C=True Value for the Concentration, µg/L
X=Mean Recovery, µg/L
S=Multi-laboratory Standard Deviation, µg/L
SR=Single-analyst Standard Deviation, µg/L

Method 208.2

For Barium, Method 208.2 (Atomic Absorption, Furnace Technique) add the following to the existing Precision and Accuracy information:

Precision and Accuracy

An interlaboratory study on metal analyses by this method was conducted by the Quality Assurance Branch (QAB) of the Environmental Monitoring Systems Laboratory—Cincinnati (EMSL-CI). Synthetic concentrates containing various levels of this element were added to reagent water, surface water, drinking water and three effluents. These samples were digested by the total digestion procedure, 4.1.3 in this manual. Results for the reagent water are given below. Results for other water types and study details are found in “EPA Method Study 31, Trace Metals by Atomic Absorption (Furnace Techniques),” National Technical Information Service, 5285 Port Royal Road, Springfield, VA 22161, Order No. PB 86–121 704/AS, by Copeland, F.R. and Maney, J.P., January 1986.

For a concentration range of 56.50–437 µg/L
$X=0.8268(C)+59.459$
$S=0.2466(X)+6.436$
$SR=0.1393(X)-0.428$

where:

C=True Value for the Concentration, µg/L
X=Mean Recovery, µg/L
S=Multi-laboratory Standard Deviation, µg/L
SR=Single-analyst Standard Deviation, µg/L

Method 210.2

For Beryllium, Method 210.2 (Atomic Absorption, Furnace Technique) replace the existing Precision and Accuracy statement with the following:

Precision and Accuracy

An interlaboratory study on metal analyses by this method was conducted by the Quality Assurance Branch (QAB) of the Environmental Monitoring Systems Laboratory—Cincinnati (EMSL-CI). Synthetic concentrates containing various levels of this element were added to reagent water, surface water, drinking water and three effluents. These samples were digested by the total digestion procedure, 4.1.3 in this manual. Results for the reagent water are given below. Results for other water types and study details are found in “EPA Method Study 31, Trace Metals by Atomic Absorption (Furnace Techniques),'' National Technical Information Service, 5285 Port Royal Road, Springfield, VA 22161, Order No. PB 86–121 704/AS, by Copeland, F.R. and Maney, J.P., January 1986.

For a concentration range of 0.45–11.4 µg/L
X=1.0682(C) − 0.158
S=0.2167(X)+0.090
SR=0.1096(X)+0.061

where:

C=True Value for the Concentration, µg/L
X=Mean Recovery, µg/L
S=Multi-laboratory Standard Deviation, µg/L
SR=Single-analyst Standard Deviation, µg/L

Method 213.2

For Cadmium, Method 213.2 (Atomic Absorption, Furnace Technique) add the following to the existing Precision and Accuracy information:

Precision and Accuracy

An interlaboratory study on metal analyses by this method was conducted by the Quality Assurance Branch (QAB) of the Environmental Monitoring System Laboratory—Cincinnati (EMSL-CI). Synthetic concentrates containing various levels of this element were added to reagent water, surface water, drinking water and three effluents. These samples were digested by the total digestion procedure, 4.1.3 in this manual. Results for the reagent water are given below. Results for other water types and study details are found in ''EPA Method Study 31, Trace Metals by Atomic Absorption (Furnace Techniques),'' National Technical Information Service, 5285 Port Royal Road, Springfield, VA 22161, Order No. PB 86–121 704/AS, by Copeland, F.R. and Maney, J.P., January 1986.

For a concentration range of 0.43–12.5 µg/L
X=0.9826(C)+0.171
S=0.2300(X)+0.045
SR=0.1031(X)+0.116

where:

C=True Value for the Concentration, µg/L
X=Mean Recovery, µg/L
S=Multi-laboratory Standard Deviation, µg/L
SR=Single-analyst Standard Devision, µg/L

Method 218.2

For Chromium, Method 218.2 (Atomic Absorption, Furnace Technique) add the following to the existing Precision and Accuracy Section:

Precision and Accuracy

An interlaboratory study on metal analyses by this method was conducted by the Quality Assurance Branch (QAB) of the Environmental Monitoring Systems Laboratory—Cincinnati (EMSL-CI). Synthetic concentrates containing various levels of this element were added to reagent water, surface water, drinking water and three effluents. These samples were digested by the total digestion procedure, 4.1.3 in this manual. Results for the reagent water are given below. Results for other water types and study details are found in ''EPA Method Study 31, Trace Metals by Atomic Absorption (Furnace Techniques),'' National Technical Information Service, 5285 Port Royal Road, Springfield, VA 22161, Order No. PB 86–121 704/AS, by Copeland, F.R. and Maney, J.P., January 1986.

For a concentration range of 9.87–246 µg/L
X=0.9120(C)+0.234
S=0.1684(X)+0.852
SR=0.1469(X)+0.315

where:

C=True Value for the Concentration, µg/L
X=Mean Recovery, µg/L
S=Multi-laboratory Standard Deviation, µg/L
SR=Single-analyst Standard Devision, µg/L

Method 219.2

For Cobalt, Method 219.2 (Atomic Absorption, Furnace Technique), replace the Precision and Accuracy Section statement with the following:

Precision and Accuracy

An interlaboratory study on metal analyses by this method was conducted by the Quality Assurance Branch (QAB) of the Environmental Monitoring Systems Laboratory—Cincinnati (EMSL-CI). Synthetic concentrates containing various levels of this element were added to reagent water, surface water, drinking water and three effluents. These samples were digested by the total digestion procedure, 4.1.3 in this manual. Results for the reagent water are given below. Results for other water types and study details are found in ''EPA Method Study 31, Trace Metals by Atomic Absorption (Furnace Techniques),'' National Technical Information Service, 5285 Port Royal Road, Springfield, VA 22161 Order No. PB 86–121 704/AS, by Copeland, F.R. and Maney, J.P., January 1986.

For a concentration range of 21.10 − 461 µg/L
X=0.8875(C)+0.859
S=0.2481(X) − 2.541
SR=0.0969(X)+0.134

where:

C=True Value for the Concentration, µg/L
X=Mean Recovery, µg/L
S=Multi-laboratory Standard Deviation, µg/L
SR=Single-analyst Standard Deviation, µg/L

Method 220.2

For Copper, Method 220.2 (Atomic Absorption, Furnace Technique) replace the Precision and Accuracy Section statement with the following:

Precision and Accuracy

An interlaboratory study on metal analyses by this method was conducted by the Quality Assurance Branch (QAB) of the Environmental Monitoring Systems Laboratory—Cincinnati (EMSL-CI). Synthetic concentrates containing various levels of this element were added to reagent water, surface water, drinking water and three effluents. These samples were digested by the total digestion procedure, 4.1.3 in this manual. Results for the reagent water are given below. Results for other water types and study details are found in ''EPA Method Study 31, Trace Metals by Atomic Absorption (Furnace Techniques),'' National Technical Information Service, 5285 Port Royal Road, Springfield, VA 22161 Order No. PB 86–121 704/AS, by Copeland, F.R. and Maney, J.P., January 1986.

For a concentration range of 0.30 − 245 μg/L
$X=0.9253(C)+0.010$
$S=0.2735(X)-0.058$
$SR=0.2197(X)-0.050$

where:

C=True Value for the Concentration, μg/L
X=Mean Recovery, μg/L
S=Multi-laboratory Standard Deviation, μg/L
SR=Single-analyst Standard Deviation, μg/L

Method 236.2

For Iron, Method 236.2 (Atomic Absorption, Furnace Technique) replace the Precision and Accuracy Section statement with the following:

Precision and Accuracy

An interlaboratory study on metal analyses by this method was conducted by the Quality Assurance Branch (QAB) of the Environmental Monitoring Systems Laboratory—Cincinnati (EMSL-CI). Synthetic concentrates containing various levels of this element were added to reagent water, surface water, drinking water and three effluents. These samples were digested by the total digestion procedure, 4.1.3 in this manual. Results for the reagent water are given below. Results for other water types and study details are found in ''EPA Method Study 31, Trace Metals by Atomic Absorption (Furnace Techniques),'' National Technical Information Service, 5285 Port Royal Road, Springfield, VA 22161 Order No. PB 86–121 704/AS, by Copeland, F.R. and Maney, J.P., January 1986.

For a concentration range of 0.37 − 455 μg/L
$X=1.4494(C)-0.229$
$S=0.3611(X)-0.079$
$SR=0.3715(X)-0.161$

where:

C=True Value for the Concentration, μg/L
X=Mean Recovery, μg/L
S=Multi-laboratory Standard Deviation, μg/L
SR=Single-analyst Standard Deviation, μg/L

Method 239.2

For Lead, Method 239.2 (Atomic Absorption, Furnace Technique) add the following to the existing Precisions and Accuracy Section:

Precision and Accuracy

An interlaboratory study on metal analyses by this method was conducted by the Quality Assurance Branch (QAB) of the Environmental Monitoring Systems Laboratory—Cincinnati (EMSL-CI). Synthetic concentrates containing various levels of this element were added to reagent water, surface water, drinking water and three effluents. These samples were digested by the total digestion procedure, 4.1.3 in this manual. Results for the reagent water are given below. Results for other water types and study details are found in ''EPA Method Study 31, Trace Metals by Atomic Absorption (Furnace Techniques),'' National Technical Information Service, 5285 Port Royal Road, Springfield, VA 22161 Order No. PB 86–121 704/AS, by Copeland, F.R. and Maney, J.P., January 1986.

For a concentration range of 10.40 − 254 μg/L
$X=0.9430(C)-0.504$
$S=0.2224(X)+0.507$
$SR=0.1931(X)-0.378$

where:

C=True Value for the Concentration, μg/L
X=Mean Recovery, μg/L
S=Multi-laboratory Standard Deviation, μg/L
SR=Single-analyst Standard Deviation, μg/L

Method 243.2

For Manganese, Method 243.2 (Atomic Absorption, Furnace Technique) replace the Precision and Accuracy Section statement with the following:

Precision and Accuracy

An interlaboratory study on metal analyses by this method was conducted by the Quality Assurance Branch (QAB) of the Environmental Monitoring Systems Laboratory—Cincinnati (EMSL—CI). Synthetic concentrates containing various levels of this element were added to reagent water, surface water, drinking water and three effluents. These samples were digested by the total digestion procedure, 4.1.3 in this manual. Results for the reagent water are given below.

Results for other water types and study details are found in ''EPA Method Study 31, Trace Metals by Atomic Absorption (Furnace Techniques),'' National Technical Information Service, 5285 Port Royal Road, Springfield, VA 22161. Order No. PB 86–121 704/AS, by Copeland, F.R. and Maney, J.P., January 1986.

For a concentration range of 0.42–666 μg/L

X=1.0480(C)+1.404

S=0.2001(X)+1.042

SR=0.1333(X)+0.680

where:

C=True Value for the Concentration, μg/L

X=Mean Recovery, μg/L

S=Multi-laboratory Standard Deviation, μg/L

SR=Single-analyst Standard Deviation, μg/L

Method 249.2

For Nickel, Method 249.2 (Atomic Absorption, Furnace Technique) replace the Precision and Accuracy Section statement with the following:

Precision and Accuracy

An interlaboratory study on metal analyses by this method was conducted by the Quality Assurance Branch (QAB) of the Environmental Monitoring Systems Laboratory—Cincinnati (EMSL—CI). Synthetic concentrates containing various levels of this element were added to reagent water, surface water, drinking water and three effluents. These samples were digested by the total digestion procedure, 4.1.3 in this manual. Results for the reagent water are given below. Results for other water types and study details are found in ''EPA Method Study 31, Trace Metals by Atomic Absorption (Furnace Techniques),'' National Technical Information Service, 5285 Port Royal Road, Springfield, VA 22161. Order No. PB 86–121 704/AS, by Copeland, F.R. and Maney, J.P., January 1986.

For a concentration range of 26.20–482 μg/L

X=0.8812(C)+2.426

S=0.2475(X)+1.896

SR=0.1935(X)+1.315

where:

C=True Value for the Concentration, μg/L

X=Mean Recovery, μg/L

S=Multi-laboratory Standard Deviation, μg/L

SR=Single-analyst Standard Deviation, μg/L

Method 270.2

For Selenium, Method 270.2 (Atomic Absorption, Furnace Technique) add the following to the existing Precision and Accuracy Section:

Precision and Accuracy

An interlaboratory study on metal analyses by this method was conducted by the Quality Assurance Branch (QAB) of the Environmental Monitoring Systems Laboratory—Cincinnati (EMSL—CI). Synthetic concentrates containing various levels of this element were added to reagent water, surface water, drinking water and three effluents. Results for the reagent water are given below. Results for other water types and study details are found in ''EPA Method Study 31, Trace Metals by Atomic Absorption (Furnace Techniques),'' National Technical Information Service, 5285 Port Royal Road, Springfield, VA 22161. Order No. PB 86–121 704/AS, by Copeland, F.R. and Maney, J.P., January 1986.

For a concentration range of 10.00–246 μg/L

X=0.9564(C)+0.476

S=0.1584(X)+0.878

SR=0.0772(X)+0.547

where:

C=True Value for the Concentration, μg/L

X=Mean Recovery, μg/L

S=Multi-laboratory Standard Deviation, μg/L

SR=Single-analyst Standard Deviation, μg/L

Method 272.2

For Silver, Method 272.2 (Atomic Absorption, Furnace Technique) add the following to the existing Precision and Accuracy Section:

Precision and Accuracy

An interlaboratory study on metal analyses by this method was conducted by the Quality Assurance Branch (QAB) of the Environmental Monitoring Systems Laboratory—Cincinnati (EMSL—CI). Synthetic concentrates containing various levels of this element were added to reagent water, surface water, drinking water and three effluents. These samples were digested by the total digestion procedure, 4.1.3 in this manual. Results for the reagent water are given below. Results for other water types and study details are found in ''EPA Method Study 31, Trace Metals by Atomic Absorption (Furnace Techniques),'' National Technical Information Service, 5285 Port Royal Road, Springfield, VA 22161. Order No. PB 86–121 704/AS, by Copeland, F.R. and Maney, J.P., January 1986.

For a concentration range of 0.45–56.5 μg/L

X=0.9470(C)+0.181

S=0.1805(X)+0.153

SR=0.1417(X)+0.039

where:

C=True Value for the Concentration, μg/L

X=Mean Recovery, μg/L

S=Multi-laboratory Standard Deviation, μg/L

SR=Single-analyst Standard Deviation, µg/L

Method 279.2

For Thalliu, Method 279.2 (Atomic Absorption, Furnace Technique) replace the Precision and Accuracy Section statement with the following:

Precision and Accuracy

An interlaboratory study on metal analyses by this method was conducted by the Quality Assurance Branch (QAB) of the Environmental Monitoring Systems Laboratory—Cincinnati (EMSL-CI). Synthetic concentrates containing various levels of this element were added to reagent water, surface water, drinking water and three effluents. These samples were digested by the total digestion procedure, 4.1.3 in this manual. Results for the reagent water are given below. Results for other water types and study details are found in ''EPA Method Study 31, Trace Metals by Atomic Absorption (Furnace Techniques),'' National Technical Information Service, 5285 Port Royal Road, Springfield, VA 22161 Order No. PB 86–121 704/AS, by Copeland, F.R. and Maney, J.P., January 1986.

For a concentration range of 10.00–252 µg/L.
X=0.8781(C)−0.715
S=0.1112(X)+0.669
SR=0.1005(X)+0.241

where:

C=True Value for the Concentration, µg/L
X=Mean Recovery, µg/L
S=Multi-laboratory Standard Deviation, µg/L
SR=Single-analyst Standard Deviation, µg/L

Method 286.2

For Vanadium, Method 286.2 (Atomic Absorption, Furnace Technique) replace the Precision and Accuracy Section statement with the following:

Precision and Accuracy

An interlaboratory study on metal analyses by this method was conducted by the Quality Assurance Branch (QAB) of the Environmental Monitoring Systems Laboratory—Cincinnati (EMSL-CI). Synthetic concentrates containing various levels of this element were added to reagent water, surface water, drinking water and three effluents. These samples were digested by the total digestion procedure, 4.1.3 in this manual. Results for the reagent water are given below. Results for other water types and study details are found in ''EPA Method Study 31, Trace Metals by Atomic Absorption (Furnace Techniques),'' National Technical Information Service, 5285 Port Royal Road, Springfield, VA 22161 Order No. PB 86–121 704/AS, by Copeland, F.R. and Maney, J.P., January 1986.

For a concentration range of 1.36–982 µg/L.
X=0.8486(C)+0.252
S=0.3323(X)−0.428
SR=0.1195(X)−0.121

where:

C=True Value for the Concentration, µg/L
X=Mean Recovery, µg/L
S=Multi-laboratory Standard Deviation, µg/L
SR=Single-analyst Standard Deviation, µg/L

Method 289.2

For Zinc, Method 289.2 (Atomic Absorption, Furnace Technique) replace the Precision and Accuracy Section statement with the following:

Precision and Accuracy

An interlaboratory study on metal analyses by this method was conducted by the Quality Assurance Branch (QAB) of the Environmental Monitoring Systems Laboratory—Cincinnati (EMSL-CI). Synthetic concentrates containing various levels of this element were added to reagent water, surface water, drinking water and three effluents. These samples were digested by the total digestion procedure, 4.1.3 in this manual. Results for the reagent water are given below. Results for other water types and study details are found in ''EPA Method Study 31, Trace Metals by Atomic Absorption (Furnace Techniques),'' National Technical Information Service, 5285 Port Royal Road, Springfield, VA 22161 Order No. PB 86–121 704/AS, by Copeland, F.R. and Maney, J.P., January 1986.

For a concentration range of 0.51–189 µg/L.
X=1.6710(C)+1.485
S=0.6740(X)−0.342
SR=0.3895(X)−0.384

where:

C=True Value for the Concentration, µg/L
X=Mean Recovery, µg/L
S=Multi-laboratory Standard Deviation, µg/L
SR=Single-analyst Standard Deviation, µg/L

[55 FR 33442, Aug. 15, 1990]

PART 140—MARINE SANITATION DEVICE STANDARD

Sec.

AUTHORITY: 33 U.S.C. 1322, as amended.

Attachment R: U.S. Fish and Wildlife Service and the National Marine Fisheries Service Consultation letter and Fish and Wildlife Service Certification

United States Department of the Interior

FISH AND WILDLIFE SERVICE
Caribbean Ecological Services Field Office
Post Office Box 491
Boqueron, PR 00622-0491
Phone: (787) 851-7297 Fax: (787) 851-7440
http://www.fws.gov/caribbean/es

In Reply Refer To:
Consultation Code: 04EC1000-2021-SLI-0899
Event Code: 04EC1000-2021-E-01515
Project Name: Puerto del Rey Marina

May 25, 2021

Subject: List of threatened and endangered species that may occur in your proposed project location or may be affected by your proposed project

To Whom It May Concern:

THE FOLLOWING SPECIES LIST IS NOT A SECTION 7 CONSULTATION. PLEASE CONTACT OUR OFFICE TO COMPLETE THE CONSULTATION PROCESS

The purpose of the Endangered Species Act (Act) is to provide a means whereby threatened and endangered species and the ecosystems upon which they depend may be conserved. Under sections 7(a)(1) and 7(a)(2) of the Act and its implementing regulations (50 CFR 402 et seq.), Federal agencies are required to utilize their authorities to carry out programs for the conservation of threatened and endangered species and to determine whether projects may affect those species and/or their designated critical habitat.

Federal agencies are required to "request of the Secretary of Interior information whether any species which is listed or proposed to be listed may be present in the area of a proposed action". The enclosed species list provides information to assist with the consultation process with the U.S. Fish and Wildlife Service (Service) under section 7 of the Act. However, the enclosed species list **does not complete the required consultation process**. The species list identifies threatened, endangered, proposed and candidate species, as well as proposed and designated critical habitats, that may occur within the boundary of your proposed project and/or may be affected by your proposed project.

A discussion between the Federal agency and the Service should include what types of listed species may occur in the proposed action area, and what effect the proposed action may have on those species. This process initiates informal consultation.

When a Federal agency, after discussions with the Service, determines that the proposed action is not likely to adversely affect any listed species, or adversely modify any designated critical habitat, and the Service concurs, the informal consultation is complete and the proposed project moves ahead. If the proposed action is suspected to affect a listed species or modify designated critical habitat, the Federal agency may then prepare a Biological Assessment (BA) to assist in its determination of the project’s effects on species and their habitat.

However, a BA is required for construction projects (or other undertakings having similar physical impacts) that are major Federal actions significantly affecting the quality of the human environment as defined in the National Environmental Policy Act (42 U.S.C. 4332(2) (c)). For projects other than major construction activities, the Service suggests that a biological evaluation similar to a BA where the agency provides the Service with an evaluation on the likely effects of the action to determine whether the project may affect listed or proposed species and/or designated or proposed critical habitat. Recommended contents of a BA are described at 50 CFR 402.12.

If a Federal agency determines, based on its BA or biological evaluation, that listed species and/or designated critical habitat may be affected by the proposed project, the agency is required to further consult with the Service pursuant to 50 CFR 402. In addition, the Service recommends that candidate species, proposed species, and proposed critical habitat be addressed within the consultation process.

More information on the regulations and procedures for section 7 consultation, including the role of permit or license applicants, can be found in the "Endangered Species Consultation Handbook" at:

http://www.fws.gov/endangered/esa-library/pdf/TOC-GLOS.PDF

New information based on updated surveys, changes in the abundance and distribution of species, changed habitat conditions, or other factors could change this list. Please feel free to contact us if you need more current information or assistance regarding the potential impacts to federally proposed, listed, and candidate species and federally designated and proposed critical habitat. Please note that under 50 CFR 402.12(e) of the regulations implementing section 7 of the Act, the accuracy of this species list should be verified after 90 days. This verification can be completed formally or informally as desired. The Service recommends that verification be completed by visiting the ECOS-IPaC website at regular intervals during project planning and implementation for updates to species lists and information. An updated list may be requested through the ECOS-IPaC system by completing the same process used to receive the enclosed list.

Additionally, wind energy projects should follow the wind energy guidelines (http://www.fws.gov/windenergy/) for minimizing impacts to migratory birds and bats.

Guidance for minimizing impacts to migratory birds for projects including communications towers (e.g., cellular, digital television, radio, and emergency broadcast) can be found at:

http://www.fws.gov/migratorybirds/CurrentBirdIssues/Hazards/towers/towers.htm; http://www.towerkill.com; and http://www.fws.gov/migratorybirds/CurrentBirdIssues/Hazards/towers/comtow.html.

We appreciate your concern for threatened and endangered species. The Service encourages Federal agencies to include conservation of threatened and endangered species into their project planning to further the purposes of the Act. Please include the Consultation Tracking Number in the header of this letter with any request for consultation or correspondence about your project that you submit to our office.

For more information:

U.S. Fish and Wildlife Service
Caribbean Ecological Services Field Office
Road 301, Km. 5.1 / Bo. Corozo
Boquerón, PR 00622
Telephone: (787) 851-7297
Fax: (787) 851-7440
Email: caribbean_es@fws.gov
http://www.fws.gov/caribbean/es

Send all documents to:

U.S. Fish and Wildlife Service
P.O. Box 491
Boquerón, Puerto Rico 00622

Attachment(s):

- Official Species List
- USFWS National Wildlife Refuges and Fish Hatcheries
- Migratory Birds
- Marine Mammals
- Wetlands

Official Species List

This list is provided pursuant to Section 7 of the Endangered Species Act, and fulfills the requirement for Federal agencies to "request of the Secretary of the Interior information whether any species which is listed or proposed to be listed may be present in the area of a proposed action".

This species list is provided by:

Caribbean Ecological Services Field Office
Post Office Box 491
Boqueron, PR 00622-0491
(787) 851-7297

Project Summary

Consultation Code: 04EC1000-2021-SLI-0899
Event Code: 04EC1000-2021-E-01515
Project Name: Puerto del Rey Marina
Project Type: TRANSPORTATION
Project Description: Puerto del Rey Marina facilities are localized in Fajardo, Puerto Rico. Only 30 acres, approximately, are part of the facilities that operate industrial activities exposed to stormwater. Water transportation and and boat maintenance and repair are the activities in the Marina tipically during daylight.

Project Location:

Approximate location of the project can be viewed in Google Maps: https://www.google.com/maps/@18.281834,-65.63798831536693,14z

Counties: Ceiba and Fajardo counties, Puerto Rico

Endangered Species Act Species

There is a total of 3 threatened, endangered, or candidate species on this species list.

Species on this list should be considered in an effects analysis for your project and could include species that exist in another geographic area. For example, certain fish may appear on the species list because a project could affect downstream species.

IPaC does not display listed species or critical habitats under the sole jurisdiction of NOAA Fisheries[1], as USFWS does not have the authority to speak on behalf of NOAA and the Department of Commerce.

See the "Critical habitats" section below for those critical habitats that lie wholly or partially within your project area under this office's jurisdiction. Please contact the designated FWS office if you have questions.

---

1. NOAA Fisheries, also known as the National Marine Fisheries Service (NMFS), is an office of the National Oceanic and Atmospheric Administration within the Department of Commerce.

Mammals

NAME	STATUS
West Indian Manatee *Trichechus manatus* There is **final** critical habitat for this species. The location of the critical habitat is not available. ***This species is also protected by the Marine Mammal Protection Act, and may have additional consultation requirements.*** Species profile: https://ecos.fws.gov/ecp/species/4469	Threatened

Birds

NAME	STATUS
Yellow-shouldered Blackbird *Agelaius xanthomus* There is **final** critical habitat for this species. Your location overlaps the critical habitat. Species profile: https://ecos.fws.gov/ecp/species/7383	Endangered

Reptiles

NAME	STATUS
Puerto Rican Boa *Epicrates inornatus* No critical habitat has been designated for this species. Species profile: https://ecos.fws.gov/ecp/species/6628 General project design guidelines: https://ecos.fws.gov/docs/tess/ipac_project_design_guidelines/doc6757.pdf	Endangered

Critical habitats

There is 1 critical habitat wholly or partially within your project area under this office's jurisdiction.

NAME	STATUS
Yellow-shouldered Blackbird *Agelaius xanthomus* https://ecos.fws.gov/ecp/species/7383#crithab	Final

USFWS National Wildlife Refuge Lands And Fish Hatcheries

Any activity proposed on lands managed by the National Wildlife Refuge system must undergo a 'Compatibility Determination' conducted by the Refuge. Please contact the individual Refuges to discuss any questions or concerns.

THERE ARE NO REFUGE LANDS OR FISH HATCHERIES WITHIN YOUR PROJECT AREA.

Migratory Birds

Certain birds are protected under the Migratory Bird Treaty Act[1] and the Bald and Golden Eagle Protection Act[2].

Any person or organization who plans or conducts activities that may result in impacts to migratory birds, eagles, and their habitats should follow appropriate regulations and consider implementing appropriate conservation measures, as described below.

---

1. The Migratory Birds Treaty Act of 1918.
2. The Bald and Golden Eagle Protection Act of 1940.
3. 50 C.F.R. Sec. 10.12 and 16 U.S.C. Sec. 668(a)

THERE ARE NO FWS MIGRATORY BIRDS OF CONCERN WITHIN THE VICINITY OF YOUR PROJECT AREA.

Migratory Birds FAQ

Tell me more about conservation measures I can implement to avoid or minimize impacts to migratory birds.

Nationwide Conservation Measures describes measures that can help avoid and minimize impacts to all birds at any location year round. Implementation of these measures is particularly important when birds are most likely to occur in the project area. When birds may be breeding in the area, identifying the locations of any active nests and avoiding their destruction is a very helpful impact minimization measure. To see when birds are most likely to occur and be breeding in your project area, view the Probability of Presence Summary. Additional measures or permits may be advisable depending on the type of activity you are conducting and the type of infrastructure or bird species present on your project site.

What does IPaC use to generate the migratory birds potentially occurring in my specified location?

The Migratory Bird Resource List is comprised of USFWS Birds of Conservation Concern (BCC) and other species that may warrant special attention in your project location.

The migratory bird list generated for your project is derived from data provided by the Avian Knowledge Network (AKN). The AKN data is based on a growing collection of survey, banding, and citizen science datasets and is queried and filtered to return a list of those birds reported as occurring in the 10km grid cell(s) which your project intersects, and that have been identified as warranting special attention because they are a BCC species in that area, an eagle (Eagle Act requirements may apply), or a species that has a particular vulnerability to offshore activities or development.

Again, the Migratory Bird Resource list includes only a subset of birds that may occur in your project area. It is not representative of all birds that may occur in your project area. To get a list of all birds potentially present in your project area, please visit the AKN Phenology Tool.

What does IPaC use to generate the probability of presence graphs for the migratory birds potentially occurring in my specified location?
The probability of presence graphs associated with your migratory bird list are based on data provided by the Avian Knowledge Network (AKN). This data is derived from a growing collection of survey, banding, and citizen science datasets .

Probability of presence data is continuously being updated as new and better information becomes available. To learn more about how the probability of presence graphs are produced and how to interpret them, go the Probability of Presence Summary and then click on the "Tell me about these graphs" link.

How do I know if a bird is breeding, wintering, migrating or present year-round in my project area?
To see what part of a particular bird's range your project area falls within (i.e. breeding, wintering, migrating or year-round), you may refer to the following resources: The Cornell Lab of Ornithology All About Birds Bird Guide, or (if you are unsuccessful in locating the bird of interest there), the Cornell Lab of Ornithology Neotropical Birds guide. If a bird on your migratory bird species list has a breeding season associated with it, if that bird does occur in your project area, there may be nests present at some point within the timeframe specified. If "Breeds elsewhere" is indicated, then the bird likely does not breed in your project area.

What are the levels of concern for migratory birds?
Migratory birds delivered through IPaC fall into the following distinct categories of concern:

1. "BCC Rangewide" birds are Birds of Conservation Concern (BCC) that are of concern throughout their range anywhere within the USA (including Hawaii, the Pacific Islands, Puerto Rico, and the Virgin Islands);
2. "BCC - BCR" birds are BCCs that are of concern only in particular Bird Conservation Regions (BCRs) in the continental USA; and
3. "Non-BCC - Vulnerable" birds are not BCC species in your project area, but appear on your list either because of the Eagle Act requirements (for eagles) or (for non-eagles) potential susceptibilities in offshore areas from certain types of development or activities (e.g. offshore energy development or longline fishing).

Although it is important to try to avoid and minimize impacts to all birds, efforts should be made, in particular, to avoid and minimize impacts to the birds on this list, especially eagles and BCC species of rangewide concern. For more information on conservation measures you can implement to help avoid and minimize migratory bird impacts and requirements for eagles, please see the FAQs for these topics.

Details about birds that are potentially affected by offshore projects
For additional details about the relative occurrence and abundance of both individual bird species and groups of bird species within your project area off the Atlantic Coast, please visit the Northeast Ocean Data Portal. The Portal also offers data and information about other taxa besides birds that may be helpful to you in your project review. Alternately, you may download the bird model results files underlying the portal maps through the NOAA NCCOS Integrative Statistical

Modeling and Predictive Mapping of Marine Bird Distributions and Abundance on the Atlantic Outer Continental Shelf project webpage.

Bird tracking data can also provide additional details about occurrence and habitat use throughout the year, including migration. Models relying on survey data may not include this information. For additional information on marine bird tracking data, see the Diving Bird Study and the nanotag studies or contact Caleb Spiegel or Pam Loring.

What if I have eagles on my list?

If your project has the potential to disturb or kill eagles, you may need to obtain a permit to avoid violating the Eagle Act should such impacts occur.

Proper Interpretation and Use of Your Migratory Bird Report

The migratory bird list generated is not a list of all birds in your project area, only a subset of birds of priority concern. To learn more about how your list is generated, and see options for identifying what other birds may be in your project area, please see the FAQ "What does IPaC use to generate the migratory birds potentially occurring in my specified location". Please be aware this report provides the "probability of presence" of birds within the 10 km grid cell(s) that overlap your project; not your exact project footprint. On the graphs provided, please also look carefully at the survey effort (indicated by the black vertical bar) and for the existence of the "no data" indicator (a red horizontal bar). A high survey effort is the key component. If the survey effort is high, then the probability of presence score can be viewed as more dependable. In contrast, a low survey effort bar or no data bar means a lack of data and, therefore, a lack of certainty about presence of the species. This list is not perfect; it is simply a starting point for identifying what birds of concern have the potential to be in your project area, when they might be there, and if they might be breeding (which means nests might be present). The list helps you know what to look for to confirm presence, and helps guide you in knowing when to implement conservation measures to avoid or minimize potential impacts from your project activities, should presence be confirmed. To learn more about conservation measures, visit the FAQ "Tell me about conservation measures I can implement to avoid or minimize impacts to migratory birds" at the bottom of your migratory bird trust resources page.

Marine Mammals

Marine mammals are protected under the Marine Mammal Protection Act. Some are also protected under the Endangered Species Act[1] and the Convention on International Trade in Endangered Species of Wild Fauna and Flora[2].

The responsibilities for the protection, conservation, and management of marine mammals are shared by the U.S. Fish and Wildlife Service [responsible for otters, walruses, polar bears, manatees, and dugongs] and NOAA Fisheries[3] [responsible for seals, sea lions, whales, dolphins, and porpoises]. Marine mammals under the responsibility of NOAA Fisheries are **not** shown on this list; for additional information on those species please visit the Marine Mammals page of the NOAA Fisheries website.

The Marine Mammal Protection Act prohibits the take of marine mammals and further coordination may be necessary for project evaluation. Please contact the U.S. Fish and Wildlife Service Field Office shown.

---

1. The Endangered Species Act (ESA) of 1973.
2. The Convention on International Trade in Endangered Species of Wild Fauna and Flora (CITES) is a treaty to ensure that international trade in plants and animals does not threaten their survival in the wild.
3. NOAA Fisheries, also known as the National Marine Fisheries Service (NMFS), is an office of the National Oceanic and Atmospheric Administration within the Department of Commerce.

NAME

West Indian Manatee *Trichechus manatus*

Species profile: https://ecos.fws.gov/ecp/species/4469

Wetlands

Impacts to NWI wetlands and other aquatic habitats may be subject to regulation under Section 404 of the Clean Water Act, or other State/Federal statutes.

For more information please contact the Regulatory Program of the local U.S. Army Corps of Engineers District.

Please note that the NWI data being shown may be out of date. We are currently working to update our NWI data set. We recommend you verify these results with a site visit to determine the actual extent of wetlands on site.

ESTUARINE AND MARINE DEEPWATER

- E1UBL
- M1AB3/RF1L
- M1UBL

ESTUARINE AND MARINE WETLAND

- E2EM1N
- E2FO3P
- M2US2P

FRESHWATER EMERGENT WETLAND

- PEM1A
- PEM1C

FRESHWATER FORESTED/SHRUB WETLAND

- PFO3C

United States Department of the Interior

FISH AND WILDLIFE SERVICE
Caribbean Ecological Services
Field Office
P.O. Box 491
Boqueron, PR 00622

In Reply Refer To:
FWS/R4/CESFO/72-MM-099

AUG 20 2015

Mr. Edgardo Hernández Alvarado
EHA Engineering, PSC
PO Box 1186
Fajardo, PR 00738

Re: MSGP Storm Water Discharge
Permit Marina Puerto del Rey

Dear Mr. Hernández-Alvarado:

We have reviewed your request for information regarding endangered and threatened species and their habitats for the above referenced action. Our comments are provided under the Endangered Species Act (Act) (87 Stat. 884, as amended; 16 United States Code 1531 *et seq.*), and in accordance with the Fish and Wildlife Coordination Act (47 Stat. 401, as amended; 16 U.S.C. 661 *et seq.*).

Marina Puerto del Rey is applying for a storm water discharge permit for its operations in Fajardo, Puerto Rico. The proposed site location lies within the range of the endangered Antillean manatee (*Trichechus manatus manatus*). Based on the information provided, the location of the facility and the nature of the permit we believe that the storm water discharge qualifies under Criterion C, Federally-listed threatened or endangered species or their designated critical habitat(s) are likely to occur in or near the facility's "action area," and the industrial activity's discharges and discharge-related activities are not likely to adversely affect listed threatened or endangered species or critical habitat under our purview.

We appreciate your interest in protecting endangered species and their habitats. It is the Service's mission to work with others to conserve, protect, and enhance marine life, wildlife, plants and their habitats for the continuing benefit of our people. Please do not hesitate to contact Felix López at 787-851-7297.

Sincerely yours,

Edwin E. Muñiz
Field Supervisor

agcs

UNITED STATES DEPARTMENT OF COMMERCE
National Oceanic and Atmospheric Administration
NATIONAL MARINE FISHERIES SERVICE
Southeast Regional Office
263 13th Avenue South
St. Petersburg, Florida 33701-5505
http://sero.nmfs.noaa.gov

F/SER31:LC
SER-2014-14602

JUN 25 2015

Chief, Antilles Regulatory Section
Jacksonville District Corps of Engineers
Antilles Office
Department of the Army
400 Fernández Juncos Avenue
San Juan, Puerto Rico 00901-3299

Ref.: SAJ-1988-00267 (SP-CGR) and (NWP-CGR), Mr. Jeremy Griffiths of Marina PDR Acquisitions, LLC, Maintenance Dredging of Marina Channels and Fairways, Replacement of 133 Mooring Piles, and Repair of Breakwater, Marina Puerto del Rey, Fajardo, Puerto Rico

Dear Sir or Madam:

This letter responds to the July 11, 2014, letter and the February 20, 2015, email from the U.S. Army Corps of Engineers (USACE) for the above-referenced permit applications by Mr. Jeremy Griffiths of Marina PDR Acquisitions, LLC. The USACE is requesting concurrence with its project-effects determination that the maintenance dredging of marina channels, repair or replacement of wooden piles and the breakwater may affect, but is not likely to adversely affect, Endangered Species Act (ESA)-listed hawksbill (*Eretmochelys imbricata*), leatherback (*Dermochelys coriacea*), loggerhead (*Caretta caretta*), and green sea turtles (*Chelonia mydas)*. You also determined that the project would have no effect on federally listed acroporid corals or their critical habitat. Our findings on the project's potential effects are based on the project description in this response. Changes to the proposed action may negate our findings and may require reinitiation of consultation.

The project is located within the existing Puerto del Rey Marina in Fajardo, Puerto Rico (approximate position 18.286305°N, 65.635942°W, National American Datum of 1983). The applicant proposes the dredging of up to approximately 8,000 cubic yards (yd^3) of material annually from approximately 31 acres within the existing marina footprint (Figure 1) over a 10-year period. Dredging will take place within channels and fairways (watercourses within marina by which boats travel between interior channels and marina berths). Dredging is proposed in 5 locations marked A, B, C, D, and E on Figure 1. Based on conversations with the applicant during a site inspection on February 17, 2015, dredging of section E, which is the entrance channel to the marina, may not be completed immediately, but the dredging of sections A-D will take place as soon as a permit is issued. All of the dredging will take place in areas that were previously dredged as part of marina construction and a 1999 expansion. Dredging will be done using a suction hydraulic pump on a barge and dredge spoil will be pumped through an 8-inch (in)-diameter pipe to a temporary upland disposal site within the marina property for drying. The pipe will be run under the existing docks along the marine bottom so as not to interfere with daily marina operations. The temporary upland disposal site will contain geotextile bags enclosed within an earthen dike with a holding capacity of 2,500 yd^3. Water from the dredge spoil will be contained in uplands. Once the dredged material is dry, it will be disposed of in a landfill or other upland site.

The applicant also proposes the replacement of 133 mooring piles with an outer diameter of 12.75 in and the repair of 205 linear meters of the breakwater (Figure 2). The wooden mooring piles will be cut level with the sea floor by a diver and a crane will then lift the pile out of the water for disposal. New steel piles will then be installed adjacent to the old pile with a floating crane. New steel piles will be pushed into the marine bottom until they reach hard substrate. The piles will be forced then into the hard substrate using a hydraulic hammer. The southern breakwater is connected to the terrestrial portion of the marina by a bridge, which will be used to transport rocks overland for placement along the southern section of breakwater to be repaired (see Figure 1). Rocks will be deposited along the southern section of the breakwater using an excavator or crane to complete the repairs. The eastern section of the breakwater will be repaired using the excavator or crane from a barge. Only the toe of the new rock placement will reach the water; the rest of the repair will be placed over existing rocks on the upland portion of the breakwater.

The applicant indicated that the pile replacement work is expected to take 3 months to complete working Monday through Friday for 8 hours per day. The applicant estimates that it will take 20 minutes to cut each old wooden pile and 20 minutes to complete the removal of the pile. The applicant estimates that it will take approximately 50 minutes to install each new steel pile, of which 15 minutes are for the use of the hydraulic hammer.

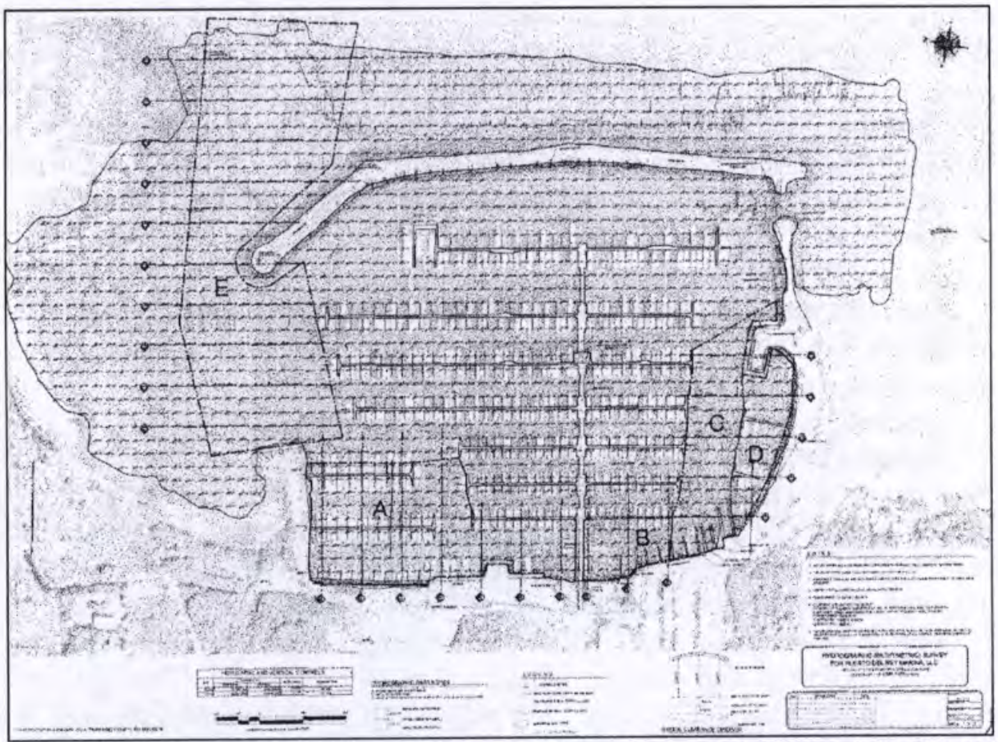

Figure 1. Figure showing the locations of the proposed dredging areas A-E (from Joint Permit Application submitted to the USACE by Marina PDR Acquisitions, 2014)

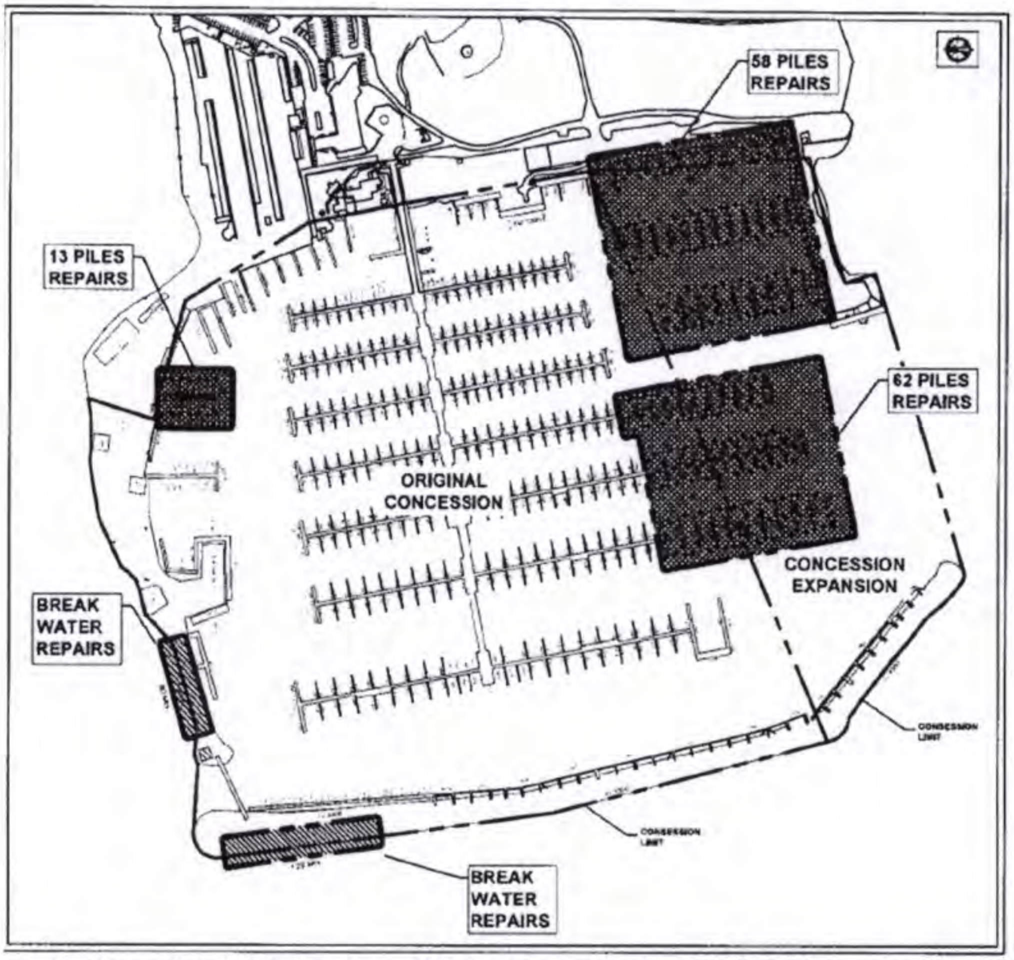

Figure 2. Figure showing the locations of the breakwater repairs and pile replacements (from Joint Permit Application submitted to the USACE by Marina PDR Acquisitions, 2014)

The USACE will include the following requirements for protection of ESA resources as special conditions in any permit issued for the project:

1. No impacts to seagrass or corals are authorized as part of these projects.
2. Compliance with NMFS's *Sea Turtle and Smalltooth Sawfish Construction Conditions* (dated March 23, 2006, enclosed) is required.
3. Compliance with NMFS's *Vessel Strike Avoidance Measures and Reporting for Mariners* (revised February 2008, enclosed) is required.
4. The permittee shall have designated personnel in a vessel at all times during the dredging to survey the proposed area for the presence of sea turtles prior to commencing in-water work. Work will stop if sea turtles are sighted within 50 feet as per NMFS's *Sea Turtle and Smalltooth Sawfish Construction Conditions* and will not resume until the animal or animals have left the area.
5. No debris shall be discharged into the water as part of the breakwater repair. Any debris that accidently falls into the water shall be removed immediately.
6. Prior to the initiation of repair work, floating turbidity curtains, nets, or barriers shall be installed around all in-water work areas to collect any debris that may fall to the sea floor

and to prevent the transport of sediment outside the project area. Similarly, floating turbidity curtains or barriers shall be installed around all dredging areas prior to the commencement of dredging activities. The turbidity barriers, curtains, or nets shall remain in place and be maintained until the authorized work has been completed and all erodible materials have been stabilized. The turbidity curtains, barriers, or nets shall be monitored prior to commencement of work and during construction, including by designated personnel doing in-water monitoring, to ensure that the barriers or nets are properly secured and are effective in preventing the transport of sediment outside the project area and in collecting any debris that falls in the water. No work shall commence or proceed until the turbidity curtains, barriers, or nets are properly installed and functional.

7. Any vessel or barge associated with the construction of the proposed project shall be moored to the existing dock and is only authorized to anchor in sandy bottom when necessary.

ESA-listed species under our purview that may occur in the area include the endangered hawksbill, endangered leatherback, threatened Northwest Atlantic Ocean distinct population segment loggerhead, and threatened[1] green sea turtles. Hawksbill and green sea turtles are known to use nearshore areas containing reefs and seagrass along the east coast of Puerto Rico, including in the project area. Hawksbill nesting and infrequent green sea turtle nesting has been reported on beaches in the Fajardo area (Puerto Rico Department of Natural and Environmental Resources [DNER], unpublished data). Leatherback sea turtles are an offshore species that are rarely observed close to shore except during their nesting season. Loggerhead sea turtles have been infrequently reported in Caribbean waters. Leatherback sea turtles have been reported as nesting on Los Machos Beach in Ceiba, south of the project site and 1 loggerhead nest was also reported on this beach a decade ago. There have been no reported sightings of any sea turtles in the marina based on information from the applicant. Manatees are the only ESA-listed species that are sighted in the marina. Because all of the dredging activities are occurring inside the existing marina basin and in the entrance channel where no leatherback nesting habitat is present, we do not believe leatherbacks will be present in the project area during dredging, breakwater repair, or pile replacement work. Similarly, due to the rarity of loggerhead sea turtles in waters of Puerto Rico based on the lack of frequent nesting reports, no sightings reports from DNER or the marina, and no reported strandings of loggerheads in Fajardo or Ceiba based on unpublished stranding data from DNER from 1989-2009, we do not believe loggerhead sea turtles will be present in the project area during dredging. Therefore, we believe that the proposed project will have no effect on leatherback and loggerhead sea turtles.

We concur with USACE's determination that the proposed action may affect, but is not likely to adversely affect, hawksbill and green sea turtles. Hawksbill and green sea turtles may be affected by being temporarily unable to use the areas within the marina where dredging and pile replacement will occur due to construction activities and related noise that could cause them to abandon the area, and physical exclusion from areas blocked by turbidity barriers, curtains, or nets. These impacts will be ephemeral because the applicant estimates that the pile repair will be completed within 3 months and all work will take place during normal working hours only. The

---

[1] Green sea turtles are listed as threatened except for the Florida and the Pacific coast of Mexico breeding populations, which are listed as endangered.

USACE will require the use of turbidity barriers, curtains, or nets around the construction area and observers to ensure these are working properly and to ensure that no turtles are in the water prior to commencement of dredging. The use of turbidity barriers will provide a level of protection to hawksbill and green sea turtles by serving as a barrier preventing turtles from entering the construction area. The use of dedicated personnel to inspect the barriers will also serve to ensure that no sea turtles are within the work area during dredging and pile replacement. According to information provided by the applicant, no sea turtles have been sighted within the marina, likely due to the lack of refuge and foraging habitat in the marina basin. There are dense seagrass beds, as well as coral reefs and colonized hard grounds outside of the marina basin. The proposed dredging is not expected to affect these seagrass beds because, based on a site inspection on February 17, 2015, there are no seagrasses in the entrance channel. Seagrass in waters up to 10 ft in depth outside the entrance channel are very patchy, likely due to the high wave energy and associated elevated turbidity in the area. There are dense seagrass beds north of the entrance channel, but these would not be affected by dredging in the marina footprint or in the entrance channel because turbidity barriers will be used to minimize sediment transport outside the dredging area. In addition, based on observations during the site inspection, the prevailing current is toward the marina and away from these shallow seagrass beds. The proposed repair and replacement work is not expected to affect seagrass beds and coral habitats because of the location of the pile replacement and breakwater repair work in relation to these habitats as well as the special permit conditions that will be required by the USACE to protect seagrass and coral habitats and ESA species.

We believe sea turtles are not at risk of injury from in-water dredging and construction machinery. The USACE will require the presence of an observer to ensure there are no sea turtles in the work area prior to the commencement of any dredging activities. The repairs to the southern breakwater will be done from uplands and the new rock revetment will extend only to the water line. The repairs to the eastern breakwater will be done from a barge pulled along the breakwater or anchored immediately adjacent to the shoreline where there is no seagrass or coral. Additionally, the USACE will require the use of turbidity barriers, curtains, or nets around all work areas. The pile replacement will be done using a diver to cut the old piles and a crane operated from the existing docks to remove them and to install the new piles. The hydraulic hammer used to secure the new steel piles will also be operated from the existing docks. Required compliance with NMFS's *Sea Turtle and Smalltooth Sawfish Construction Conditions* will provide additional protection by requiring work to stop if one of these species is seen within 50 ft of operating machinery. Further protection will be provided by required compliance with NMFS's *Vessel Strike Avoidance Measures and Reporting for Mariners* by calling for vessel operators to be trained regarding vessel operation regarding protection of sea turtles and marine mammals. Due to the ability of sea turtles to move away from the project site if disturbed and the information from the applicant indicating that sea turtles are not sighted within the marina basin, we believe the risk of injury from in-water construction machinery will be discountable.

Steel pile driving can have acoustic impacts to sea turtles. The project includes the installation of 133 steel piles to replace old wooden piles that will be removed. Injurious decibel (dB) levels are expressed in units of sound exposure level (SEL or sSEL for a single pile-driving strike).

Based on CALTRANS[2], the installation of a 14-in diameter steel pipe pile using an impact hammer has an sSEL of 174 dB at 10 m from the source with water depths up to 15 m. At the source, the sSEL is 189 dB (calculated as the sSEL at 10 m plus 15 dB), which is slightly above the exceedance threshold for injury to sea turtles of 187 dB sSEL. Noise levels drop below the threshold for injury at 1.36 m from the source. The peak pressure is the level based on the absolute value of the largest positive or negative pressure associated with the pulse. The peak pressure from impact pile driving will be 200 dB at 10 m from the source and 215 dB at the source (200 plus 15). The NMFS-accepted threshold for peak pressure injury is 206 dB. Peak pressure noise drops below the 206 dB threshold at 4 m from the source. Because no sea turtles have been reported in the marina basin and the contractor will be required to monitor prior to any construction and pile driving activities to ensure no sea turtles or manatees are in the area as a safety precaution, we believe the risk of injury from sSEL or peak pressure is discountable.

Daily cumulative noise exposure (cSEL) is the exposure to pile-driving noise over time. The exposure zone is the area between the source noise (pile installation) and the onset of injury. Injury can result if daily cumulative noise exposure levels from pile driving exceed threshold levels and animals remain in the exposure zone during the entire daily installation process. The cSEL threshold noise level associated with injury to sea turtles is 187 dB. Based on information from the applicant, the pile installation requires approximately 2,160 strikes per day to install up to 6 piles, assuming 360 strikes per pile. If we calculate the daily cumulative SEL (cSEL) assuming 360 strikes per pile and the installation of 6 piles per day, we get a daily cSEL of 222 dB (daily cSEL = SEL at the pile + 10log [# of strikes/pile][# of piles installed/day] or 189+33). The calculated cSEL from the project is 35 dB over the sea turtle injury threshold, making potential injury from cumulative sound exposure possible up to approximately 227 m from the piles that are being installed. Sea turtle presence within that zone is unlikely based on information from the project consultant. The consultant, who has worked on projects for the marina, including the 1999 expansion, has not sighted sea turtles in the marina basin (F. Torres, Ecosystems & Associates, pers. comm. to L. Carrubba, NMFS, February 17, 2015). This is likely due to the lack of habitat within the basin, as well as the noise associated with the constant operation of vessels. The contractor will be required to monitor the area during all construction activities and pile driving will not be allowed to commence until any turtles that are observed leave the area. The fact that there is no suitable habitat within the marina basin where injurious impacts could occur means that it is unlikely that green and hawksbill sea turtles will be in the project area rather than in open waters outside the marina basin where there are numerous seagrass beds, coral reefs, and colonized hard bottoms north and east of the project area. Also, NMFS believes that sea turtles would move outside the cSEL injury zone before injury occurred due to disturbance from the increased noise levels due to pile driving. Therefore, we believe the risk of injury from cSEL is discountable.

In terms of potential behavioral impacts to green and hawksbill sea turtles associated with pile driving, we use the metric of root mean square (RMS) to determine the extent of potential behavioral noise disturbance. The RMS threshold for behavioral disturbance is 160 dB RMS for sea turtles. The RMS noise level from pile driving associated with this project is 184 dB RMS at

---

[2] CALTRANS. 2009 with 2012 Compendium. Technical Guidance for Assessment and Mitigation of the Hydroacoustic Effects of Pile Driving on Fish. Report prepared by ICF Jones & Stokes, Sacramento, CA, and Illingworth and Rodkin, Inc., Petaluma, CA. 298 pp.

10 m from the source and 199 dB RMS at the source (184 plus 15). RMS noise levels drop below 160 dB threshold at 398 m from the source. The nearest seagrass beds, coral reefs, and colonized hard bottom that are likely provide refuge and foraging habitat for green and hawksbill sea turtles are approximately 500 m from the marina basin and even further from the locations where new piles will be installed, so it is unlikely that turtles would occur within the behavioral disturbance zone. However, if they did occur in the zone, we would expect them to move away from noise disturbances due to pile driving. We believe behavioral disturbance effects will be insignificant. Also, since installation will occur only during the day, these species will be able to resume normal activities during quiet periods between pile installations, and at night.

Sediments could be re-suspended and transported to areas within the marina basin during the dredging and pile removal and installation. As noted previously, there is no sea turtle refuge and foraging habitat within the marina basin based on information provided by the applicant. The old piles will be cut level with the sea floor by a diver and removed by a crane, which should not result in significant re-suspension of sediment. The maintenance dredging will take place within an area of approximately 31 acres to remove up to approximately 8,000 yd^3 in order to reestablish the control depths in the marina, which will generate some sediment resuspension and transport. This dredging may be done annually over the next 10 years. The USACE will require the installation, monitoring, and maintenance of turbidity barriers around the in-water construction areas, which will minimize the potential transport of re-suspended sediment from the dredging and pile installation outside the construction footprint. Therefore, we believe that impacts to green and hawksbill sea turtles from damage to refuge or foraging habitat will be insignificant.

We concur with the USACE that the dredging, replacement of the piles, and repair of the breakwater will have no effect on ESA-listed corals or elkhorn and staghorn coral critical habitat. No acroporid corals or hard grounds containing the essential feature of coral critical habitat[3] are present in the marina basin where work is proposed. The area has been dredged in the past and is characterized by uncolonized sand or mud bottom largely because of past dredging activities and the fact that the area is a functioning marina servicing large vessels. Similarly, no ESA-listed coral colonies were reported in the project area based on information submitted by the applicant. There are areas containing coral reefs and colonized hard grounds outside the marina, but none are adjacent to the entrance channel or other areas where work will take place.

This concludes the USACE's consultation responsibilities under Section 7 of the ESA for the proposed action. Be advised that a new consultation must be initiated if a take occurs or new information reveals effects of the action not previously considered, or the identified action is subsequently modified in a manner that causes an effect to listed species or critical habitat in a manner or to an extent not previously considered, or if a new species is listed or critical habitat designated that may be affected by the identified action.

---

[3] The essential feature of critical habitat for listed corals is substrate of suitable quality and availability, in water depths from the mean high water line to 30 m, to support successful larval settlement, recruitment, and reattachment of fragments. Substrate of suitable quality and availability means consolidated hard bottom or dead coral skeletons free from fleshy macroalgae and sediment cover.

We have enclosed additional relevant information for your review. We look forward to further cooperation with you on other projects to ensure the conservation of our threatened and endangered marine species and designated critical habitat. If you have any questions regarding this consultation, please contact Dr. Lisamarie Carrubba, Consultation Biologist, at (787) 851-3700, or by email at Lisamarie.Carrubba@noaa.gov.

Sincerely,

Roy E. Crabtree, Ph.D.
For Regional Administrator

Enc.: 1. *Sea Turtle and Small Tooth Sawfish Construction Conditions* (Revised March 23, 2006)
2. *Vessel Strike Avoidance Measures and Reporting for Mariners* (Revised February 7, 2008)
3. *PCTS Access and Additional Considerations for ESA Section 7 Consultations* (Revised March 10, 2015)

cc: USACE – Gisela Román
F/SER4 – José A. Rivera, Pace Wilber

File: 1514.22.F.9

SEA TURTLE AND SMALLTOOTH SAWFISH CONSTRUCTION CONDITIONS

The permittee shall comply with the following protected species construction conditions:

a. The permittee shall instruct all personnel associated with the project of the potential presence of these species and the need to avoid collisions with sea turtles and smalltooth sawfish. All construction personnel are responsible for observing water-related activities for the presence of these species.

b. The permittee shall advise all construction personnel that there are civil and criminal penalties for harming, harassing, or killing sea turtles or smalltooth sawfish, which are protected under the Endangered Species Act of 1973.

c. Siltation barriers shall be made of material in which a sea turtle or smalltooth sawfish cannot become entangled, be properly secured, and be regularly monitored to avoid protected species entrapment. Barriers may not block sea turtle or smalltooth sawfish entry to or exit from designated critical habitat without prior agreement from the National Marine Fisheries Service's Protected Resources Division, St. Petersburg, Florida.

d. All vessels associated with the construction project shall operate at "no wake/idle" speeds at all times while in the construction area and while in water depths where the draft of the vessel provides less than a four-foot clearance from the bottom. All vessels will preferentially follow deep-water routes (e.g., marked channels) whenever possible.

e. If a sea turtle or smalltooth sawfish is seen within 100 yards of the active daily construction/dredging operation or vessel movement, all appropriate precautions shall be implemented to ensure its protection. These precautions shall include cessation of operation of any moving equipment closer than 50 feet of a sea turtle or smalltooth sawfish. Operation of any mechanical construction equipment shall cease immediately if a sea turtle or smalltooth sawfish is seen within a 50-ft radius of the equipment. Activities may not resume until the protected species has departed the project area of its own volition.

f. Any collision with and/or injury to a sea turtle or smalltooth sawfish shall be reported immediately to the National Marine Fisheries Service's Protected Resources Division (727-824-5312) and the local authorized sea turtle stranding/rescue organization.

g. Any special construction conditions, required of your specific project, outside these general conditions, if applicable, will be addressed in the primary consultation.

Revised: March 23, 2006

Vessel Strike Avoidance Measures and Reporting for Mariners
NOAA Fisheries Service, Southeast Region

Background

The National Marine Fisheries Service (NMFS) has determined that collisions with vessels can injure or kill protected species (e.g., endangered and threatened species, and marine mammals). The following standard measures should be implemented to reduce the risk associated with vessel strikes or disturbance of these protected species to discountable levels. NMFS should be contacted to identify any additional conservation and recovery issues of concern, and to assist in the development of measures that may be necessary.

Protected Species Identification Training

Vessel crews should use an Atlantic and Gulf of Mexico reference guide that helps identify protected species that might be encountered in U.S. waters of the Atlantic Ocean, including the Caribbean Sea, and Gulf of Mexico. Additional training should be provided regarding information and resources available regarding federal laws and regulations for protected species, ship strike information, critical habitat, migratory routes and seasonal abundance, and recent sightings of protected species.

Vessel Strike Avoidance

In order to avoid causing injury or death to marine mammals and sea turtles the following measures should be taken when consistent with safe navigation:

1. Vessel operators and crews shall maintain a vigilant watch for marine mammals and sea turtles to avoid striking sighted protected species.

2. When whales are sighted, maintain a distance of 100 yards or greater between the whale and the vessel.

3. When sea turtles or small cetaceans are sighted, attempt to maintain a distance of 50 yards or greater between the animal and the vessel whenever possible.

4. When small cetaceans are sighted while a vessel is underway (e.g., bow-riding), attempt to remain parallel to the animal's course. Avoid excessive speed or abrupt changes in direction until the cetacean has left the area.

5. Reduce vessel speed to 10 knots or less when mother/calf pairs, groups, or large assemblages of cetaceans are observed near an underway vessel, when safety permits. A single cetacean at the surface may indicate the presence of submerged animals in the vicinity; therefore, prudent precautionary measures should always be exercised. The vessel shall attempt to route around the animals, maintaining a minimum distance of 100 yards whenever possible.

6. Whales may surface in unpredictable locations or approach slowly moving vessels. When an animal is sighted in the vessel's path or in close proximity to a moving vessel and when safety permits, reduce speed and shift the engine to neutral. Do not engage the engines until the animals are clear of the area.

Additional Requirements for the North Atlantic Right Whale

1. If a sighted whale is believed to be a North Atlantic right whale, federal regulation requires a minimum distance of 500 yards be maintained from the animal (50 CFR 224.103 (c)).

2. Vessels entering North Atlantic right whale critical habitat are required to report into the Mandatory Ship Reporting System.

3. Mariners shall check with various communication media for general information regarding avoiding ship strikes and specific information regarding North Atlantic right whale sighting locations. These include NOAA weather radio, U.S. Coast Guard NAVTEX broadcasts, and Notices to Mariners. Commercial mariners calling on United States ports should view the most recent version of the NOAA/USCG produced training CD entitled "A Prudent Mariner's Guide to Right Whale Protection" (contact the NMFS Southeast Region, Protected Resources Division for more information regarding the CD).

4. Injured, dead, or entangled right whales should be immediately reported to the U.S. Coast Guard via VHF Channel 16.

Injured or Dead Protected Species Reporting
Vessel crews shall report sightings of any injured or dead protected species immediately, regardless of whether the injury or death is caused by your vessel.

Report marine mammals to the Southeast U.S. Stranding Hotline: 877-433-8299
Report sea turtles to the NMFS Southeast Regional Office: 727-824-5312

If the injury or death of a marine mammal was caused by a collision with your vessel, responsible parties shall remain available to assist the respective salvage and stranding network as needed. NMFS' Southeast Regional Office shall be immediately notified of the strike by email (takereport.nmfsser@noaa.gov) using the attached vessel strike reporting form.

For additional information, please contact the Protected Resources Division at:
NOAA Fisheries Service
Southeast Regional Office
263 13th Avenue South
St. Petersburg, FL 33701
Tel: (727) 824-5312
Visit us on the web at http://sero.nmfs.noaa.gov

NMFS Southeast Region Vessel Strike Avoidance Measures and Reporting for Mariners; revised February 2008.

PCTS Access and Additional Considerations for ESA Section 7 Consultations
(Revised 03-10-2015)

Public Consultation Tracking System (PCTS) Guidance: PCTS is a Web-based query system at **https://pcts.nmfs.noaa.gov/** that allows all federal agencies (e.g., U.S. Army Corps of Engineers - USACE), project managers, permit applicants, consultants, and the general public to find the current status of NMFS's Endangered Species Act (ESA) and Essential Fish Habitat (EFH) consultations which are being conducted (or have been completed) pursuant to ESA Section 7 and the Magnuson-Stevens Fishery Conservation and Management Act's (MSA) Sections 305(b)2 and 305(b)(4). Basic information including access to documents is available to all.

The PCTS Home Page is shown below. For USACE-permitted projects, the easiest and quickest way to look up a project's status, or review completed ESA/EFH consultations, is to click on either the "Corps Permit Query" link (top left); or, below it, click the "Find the status of a consultation based on the Corps Permit number" link in the golden "I Want To…" window.

The Public Consultation Tracking System (PCTS) is an information management system covering National Marine Fisheries Service (NOAA Fisheries) consultations under the Endangered Species Act (ESA) and under the Magnuson-Stevens Fishery Conservation and Management Act sections 305(b)(2) & 305(b)(4) Essential Fish Habitat (EFH)

Then, from the "Corps District Office" list pick the appropriate USACE district. In the "Corps Permit #" box, type in the 9-digit USACE permit number identifier, with no hyphens or letters. Simply enter the year and the permit number, joined together, using preceding zeros if necessary after the year to obtain the necessary 9-digit (no more, no less) number. For example, the USACE Jacksonville District's issued permit number SAJ-2013-0235 (LP-CMW) must be typed in as 201300235 for PCTS to run a proper search and provide complete and accurate results. For querying permit applications submitted for ESA/EFH consultation by other USACE districts, the procedure is the same. For example, an inquiry on Mobile District's permit MVN201301412 is entered as 201301412 after selecting the Mobile District from the "Corps District Office" list. PCTS questions should be directed to Kelly Shotts at Kelly.Shotts@noaa.gov or (727) 551-5603.

EFH Recommendations: In addition to its protected species/critical habitat consultation requirements with NMFS' Protected Resources Division pursuant to Section 7 of the ESA, prior to proceeding with the proposed action the action agency must also consult with NMFS' Habitat Conservation Division (HCD) pursuant to the MSA requirements for EFH consultation (16 U.S.C. 1855 (b)(2) and 50 CFR 600.905-.930, subpart K). The action agency should also ensure that the applicant understands the ESA and EFH processes; that ESA and EFH consultations are separate, distinct, and guided by different statutes, goals, and time lines for responding to the action agency; and that the action agency will (and the applicant may) receive separate consultation correspondence on NMFS letterhead from HCD regarding their concerns and/or finalizing EFH consultation.

Marine Mammal Protection Act (MMPA) Recommendations: The ESA Section 7 process does not authorize incidental takes of listed or non-listed marine mammals. If such takes may occur an incidental take authorization under MMPA Section 101 (a)(5) is necessary. Please contact NMFS' Permits, Conservation, and Education Division at (301) 713-2322 for more information regarding MMPA permitting procedures.

Attachment S: 2021 MSGP

UNITED STATES ENVIRONMENTAL PROTECTION AGENCY (EPA)
NATIONAL POLLUTANT DISCHARGE ELIMINATION SYSTEM (NPDES)
MULTI-SECTOR GENERAL PERMIT (MSGP)
FOR STORMWATER DISCHARGES ASSOCIATED WITH INDUSTRIAL ACTIVITY

In compliance with the provisions of the Clean Water Act (CWA), as amended (33 U.S.C. 1251 et seq.), operators of stormwater discharges associated with industrial activity located in an area identified in Appendix C where EPA is the permitting authority are authorized to discharge to waters of the United States in accordance with the eligibility and Notice of Intent (NOI) requirements, effluent limitations, inspection requirements, and other conditions set forth in this permit. This permit is structured as follows:

- **Parts 1-7:** General requirements that apply to all facilities;
- **Part 8:** Industry sector-specific requirements;
- **Part 9:** Specific requirements that apply in individual states and Indian country; and
- **Appendices A through P:** Additional permit conditions that apply to all operators covered under this permit.

This permit becomes effective on **March 1, 2021.** This permit and the authorization to discharge shall expire at 11:59 pm eastern time, **February 28, 2026.**

Signed and issued this 15th day of January 2021
DENNIS DEZIEL
Digitally signed by DENNIS DEZIEL
Date: 2021.01.15 11:27:28 -05'00'
Dennis Deziel,
Regional Administrator, EPA Region 1.

Signed and issued this 15th day of January 2021
JEFFREY GRATZ
Digitally signed by JEFFREY GRATZ
Date: 2021.01.15 09:35:36 -05'00'
Jeffrey Gratz,
Deputy Director, Water Division, EPA Region 2.

Signed and issued this 15th day of January 2021
CARMEN GUERRERO PEREZ
Digitally signed by CARMEN GUERRERO PEREZ
Date: 2021.01.15 11:13:39 -04'00'
Carmen R. Guerrero-Perez,
Director, Caribbean Environmental Protection Division, EPA Region 2.

Signed and issued this 15th day of January 2021
CATHERINE LIBERTZ
Digitally signed by CATHERINE LIBERTZ
Date: 2021.01.15 10:55:42 -05'00'
Catherine A. Libertz,
Director, Water Division, EPA Region 3.

Signed and issued this 15th day of January 2021
JEANEANNE GETTLE
Digitally signed by JEANEANNE GETTLE
Date: 2021.01.15 08:29:14 -05'00'
Jeaneanne Gettle,
Director, Water Division, EPA Region 4.

Signed and issued this 15th day of January 2021
Digitally signed by TERA FONG
Date: 2021.01.15 11:31:25 -06'00'
Tera L. Fong,
Director, Water Division, EPA Region 5.

Signed and issued this 15th day of January 2021
CHARLES MAGUIRE
Digitally signed by CHARLES MAGUIRE
DN: c=US, o=U.S. Government, ou=Environmental Protection Agency, cn=CHARLES MAGUIRE, 0.9.2342.19200300.100.1.1=68001003650036
Date: 2021.01.15 12:41:18 -06'00'
Charles Maguire,
Director, Water Division, EPA Region 6.

Signed and issued this 15th day of January 2021
JEFFERY ROBICHAUD
Digitally signed by JEFFERY ROBICHAUD
Date: 2021.01.15 13:43:45 -06'00'
Jeffery Robichaud,
Director, Water Division, EPA Region 7.

Signed and issued this 15th day of January 2021
DARCY OCONNOR
Digitally signed by DARCY OCONNOR
Date: 2021.01.15 14:22:01 -07'00'
Darcy O'Connor,
Director, Water Division, EPA Region 8.

Signed and issued this 15th day of January 2021
TOMAS TORRES
Digitally signed by TOMAS TORRES
Date: 2021.01.15 15:00:36 -08'00'
Tomás Torres,
Director, Water Division, EPA Region 9.

Signed and issued this 15th day of January 2021
DANIEL OPALSKI
Digitally signed by DANIEL OPALSKI
Date: 2021.01.15 15:30:11 -08'00'
Daniel D. Opalski,
Director, Water Division, EPA Region 10.

Table of Contents

1 How to Obtain Coverage Under the 2021 MSGP

To be covered under this permit, you must meet all of the eligibility conditions and follow the requirements for obtaining permit coverage in Part 1.

1.1 Eligibility Conditions

1.1.1 **Location of Your Facility.** Your facility must be located in an area where EPA is the permitting authority and where coverage under this permit is available (see Appendix C); [1]

1.1.2 **Your Discharges Are Associated with Industrial Activity.** Your facility must have an authorized stormwater discharge or an authorized non-stormwater discharge per Part 1.2 associated with industrial activity from your primary industrial activity (as defined in Appendix A and as listed in Appendix D), or you have been notified by EPA that you are eligible for coverage under Sector AD.

1.1.3 **Limitations on Coverage.** Discharges from your facility are **not**:

1.1.3.1 **Discharges mixed with non-stormwater discharges.** Discharges mixed with non-stormwater discharges other than those mixed with authorized non-stormwater discharges listed in Part 1.2.2, and/or those mixed with a discharge authorized by a different NPDES permit and/or a discharge that does not require NPDES authorization.

1.1.3.2 **Stormwater discharges associated with construction activity.** Stormwater discharges associated with construction activity disturbing one acre or more, or that are part of a larger common plan of development or sale if the larger common plan will ultimately disturb one acre or more, unless in conjunction with mining activities or certain oil and gas extraction activities as specified in Sectors G, H, I, and J of this permit.

1.1.3.3 **Discharges already covered by another NPDES permit.** Unless you have received written notification from EPA specifically allowing these discharges to be covered under this permit, you are not eligible for coverage under this permit for any of the following:

a. Stormwater discharges associated with industrial activity that are currently covered under an individual NPDES permit or an alternative NPDES general permit;

b. Stormwater discharges covered within five years prior to the effective date of this permit by an individual NPDES permit or alternative NPDES general permit where that permit established site-specific numeric water quality-based effluent limitations developed for the industrial stormwater component of the discharge; or

c. Discharges from facilities where any NPDES permit has been or is in the process of being denied, terminated, or revoked by EPA (this does not apply to the routine expiration and reissuance of NPDES permits every five years).

1.1.3.4 **Stormwater Discharges Subject to Effluent Limitations Guidelines.** Stormwater discharges subject to stormwater effluent limitation guidelines under 40 CFR, Subchapter N, other than those listed in Table 1-1 of this permit.

---

[1] This condition also applies in the limited circumstances where your facility is located in a jurisdiction where EPA is not the permitting authority, but your discharge point location is to a water of the United States where EPA is the permitting authority.

1.1.4 **Eligibility Related to Endangered Species Act (ESA) Listed Species and Critical Habitat Protection.** You are able to demonstrate that your stormwater discharges, authorized non-stormwater discharges, and stormwater discharge-related activities are not likely to adversely affect any species that are federally listed as endangered or threatened ("ESA-listed") and are not likely to adversely affect habitat that is designated as "critical habitat" under the Endangered Species Act (ESA), or said discharges and activities were the subject of an ESA Section 7 consultation or an ESA Section 10 permit. You must follow the procedures outlined in the Endangered Species Protection section of the NOI in EPA's NPDES eReporting Tool (NeT-MSGP) and meet one of the criteria listed in Appendix E. You must comply with any measures that formed the basis of your criteria eligibility determination to be in compliance with the MSGP. These measures become permit requirements per Part 2.3. Documentation of these measures must be kept as part of your Stormwater Pollution Prevention Plan (SWPPP) (see Part 6.2.6.1).

1.1.5 **Eligibility related to National Historic Preservation Act (NHPA)-Protected Properties.** You must follow the procedures outlined in the Historic Properties section of the NOI in NeT-MSGP to demonstrate that your stormwater discharges, authorized non-stormwater discharges, and stormwater discharge-related activities meet one of the eligibility criteria in Appendix F.

1.1.6 **Eligibility for "New Dischargers" and "New Sources" (as defined in Appendix A)[2] ONLY**

1.1.6.1 **Eligibility for "New Dischargers" and "New Sources" Based on Water Quality Standards.** Your stormwater discharge must be controlled as necessary such that the receiving water of the United States will meet applicable water quality standards. You are ineligible for coverage under this permit if EPA determines prior to your authorization to discharge that your stormwater discharges will not be controlled as necessary such that the receiving water of the United States will not meet an applicable water quality standard. In such case, EPA may notify you that an individual permit application is necessary per Part 1.3.8, or, alternatively, EPA may authorize your coverage under this permit after you implement additional control measures so that your stormwater discharges will be controlled as necessary such that the receiving water of the United States will meet applicable water quality standards.

1.1.6.2 **Eligibility for "New Dischargers" and "New Sources" for Water-Quality Impaired Waters.** If you discharge to an "impaired water" (as defined in Appendix A), you must do one of the following:

a. Prevent all exposure to stormwater of the pollutant(s) for which the waterbody is impaired, and retain documentation of procedures taken to prevent exposure onsite with your SWPPP;

b. When submitting your NOI in NeT-MSGP, provide the technical information or other documentation to support your claim that the pollutant(s) for which the waterbody

---

[2] "New Discharger" means a facility from which there is or may be a discharge, that did not commence the discharge of pollutants at a particular site prior to August 13, 1979, which is not a new source, and which has never received a finally effective NPDES permit for discharges at that site. See 40 CFR 122.2.

"New Source" means any building, structure, facility, or installation from which there is or may be a "discharge of pollutants," the construction of which commenced: i) after promulgation of standards of performance under section 306 of the CWA which are applicable to such source, or ii) after proposal of standards of performance in accordance with section 306 of the CWA which are applicable to such source, but only if the standards are promulgated in accordance with section 306 within 120 days of their proposal. See 40 CFR 122.2.

is impaired is not present at your facility, and retain such documentation with your SWPPP; or

c. When submitting your NOI in NeT-MSGP, provide either data or other technical documentation, to support a conclusion that the stormwater discharge will be controlled as necessary such that the receiving water of the United States will meet applicable water quality standards and retain such information with your SWPPP. The information you submit must demonstrate:

i. For discharges to waters without an EPA-approved or established total maximum daily load (TMDL), that the discharge of the pollutant for which the water is impaired will be controlled as necessary such that the receiving water of the United States will meet applicable water quality standards at the point of discharge to the waterbody; or

ii. For discharges to waters with an applicable EPA-approved or established TMDL, that there are, in accordance with 40 CFR 122.4(i), sufficient remaining wasteload allocations in the TMDL to allow your discharge and that existing dischargers to the waterbody are subject to compliance schedules designed to bring the waterbody into attainment with water quality standards (e.g., a reserve allocation for future growth).

You are eligible under Part 1.1.6.2.c if you receive a determination from the applicable EPA Regional Office that your stormwater discharge will be controlled as necessary such that the receiving water of the United States will meet applicable water quality standards and you document the Region's determination in your SWPPP. If the applicable EPA Regional Office fails to respond to you within 30 days after submission of data, you are considered eligible for coverage.

1.1.6.3 **<u>Eligibility for "New Dischargers" and "New Sources" for Waters with High Water Quality (Tier 2, 2.5, and 3).</u>**

a. For new dischargers and new sources to Tier 2 or Tier 2.5 waters, your discharge must not lower the water quality of the applicable water. See a list of Tier 2 and Tier 2.5 waters in Appendix L.

b. For new dischargers and new sources to waters designed by a state or tribe as Tier 3 waters[3] (i.e., outstanding national resource waters) for antidegradation purposes under 40 CFR 131.13(a)(3), you are not eligible under this permit and you must apply for an individual permit. See a list of Tier 3 waters in Appendix L.

1.1.7 **<u>Eligibility for Discharges to a Federal Comprehensive Environmental Response, Compensation, and Liability Act (CERCLA) Site.</u>** If you discharge to a federal CERCLA Site listed in Appendix P, you must notify the EPA Region 10 Office when submitting your NOI, and the EPA Region 10 Office must determine that you are eligible for permit coverage. In determining eligibility for coverage under this Part, the EPA Region 10 Office may evaluate whether you are implementing or plan to implement adequate controls and/or procedures to ensure that your discharge will not lead to

---

[3] For the purposes of this permit, your project is considered to discharge to a Tier 2, Tier 2.5, or Tier 3 water if the first water of the United States to which you discharge is identified by a state, tribe, or EPA as a Tier 2, Tier 2.5, or Tier 3 water. For discharges that enter a separate storm sewer system prior to discharge, the first water of the United States to which you discharge is the waterbody that receives the stormwater discharge from the storm sewer system (separate storm sewer systems (MS4s and non-municipal storm sewers systems) do not include combined sewer systems or separate sanitary sewer systems).

recontamination of aquatic media at the CERCLA Site (i.e., your stormwater discharge will be controlled as necessary such that the receiving water of the United States will meet an applicable water quality standard). If it is determined that your facility discharges to a CERCLA Site listed in Appendix P after you have obtained coverage under this permit, you must contact the EPA Region 10 Office and ensure that you either have implemented or will implement adequate controls and/or procedures to ensure that your discharges will not lead to recontamination of aquatic media at the CERCLA Site such that your stormwater discharge will be controlled as necessary such that the receiving water of the United States will meet an applicable water quality standard.

For the purposes of this permit, a facility discharges to a federal CERCLA Site if the discharge flows directly into the site through its own conveyance, or through a conveyance owned by others, such as a municipal separate storm sewer system (MS4).

1.2 Types of Discharges Authorized Under the MSGP[4]

1.2.1 **Authorized Stormwater Discharges.** If you meet all the eligibility criteria in Part 1.1, then the following discharges from your facility are authorized under this permit:

1.2.1.1 Stormwater discharges associated with industrial activity for any primary industrial activities and co-located industrial activities (as defined in Appendix A) except for any stormwater discharges prohibited in Part 8;

1.2.1.2 Discharges EPA has designated as needing a stormwater permit as provided in Sector AD;

1.2.1.3 Discharges that are not otherwise required to obtain NPDES permit authorization but are mixed with discharges that are authorized under this permit; and

1.2.1.4 Stormwater discharges from facilities subject to any of the national stormwater-specific effluent limitations guidelines listed in Table 1-1.

Table 1-1. Stormwater-Specific Effluent Limitations Guidelines

Regulated Discharge	40 CFR Section	MSGP Sector	New Source Performance Standard (NSPS)	New Source Date
Discharges resulting from spray down or intentional wetting of logs at wet deck storage areas	Part 429, Subpart I	A	Yes	1/26/81
Runoff from phosphate fertilizer manufacturing facilities that comes into contact with any raw materials, finished product, by-products or waste products (SIC 2874)	Part 418, Subpart A	C	Yes	4/8/74
Runoff from asphalt emulsion facilities	Part 443, Subpart A	D	Yes	7/28/75
Runoff from material storage piles at cement manufacturing facilities	Part 411, Subpart C	E	Yes	2/20/74

---

[4] Any discharges not expressly authorized in this permit cannot become authorized or shielded from liability under Clean Water Act (CWA) section 402(k) by disclosure to EPA, state, or local authorities after issuance of this permit via any means, including the Notice of Intent (NOI) to be covered by the permit, the Stormwater Pollution Prevention Plan (SWPPP), or during an inspection.

Regulated Discharge	40 CFR Section	MSGP Sector	New Source Performance Standard (NSPS)	New Source Date
Mine dewatering discharges at crushed stone, construction sand and gravel, or industrial sand mining facilities	Part 436, Subparts B, C, and D	J	No	N/A
Runoff from hazardous waste and non-hazardous waste landfills	Part 445, Subparts A and B	K, L	Yes	2/2/00
Runoff from coal storage piles at steam electric generating facilities	Part 423	O	Yes	11/19/82 (10/8/74)[1]
Runoff containing urea from airfield pavement deicing at existing and new primary airports with 1,000 or more annual non-propeller aircraft departures	Part 449	S	Yes	6/15/1

[1] NSPS promulgated in 1974 were not removed via the 1982 regulation; therefore, wastewaters generated by 40 CFR Part 423-applicable sources that were New Sources under the 1974 regulations are subject to the 1974 NSPS.

1.2.2 **Authorized Non-Stormwater Discharges.** Below is the list of non-stormwater discharges authorized under this permit. Unless specifically listed in this Part, this permit does not authorize any other non-stormwater discharges requiring NPDES permit coverage and you must either eliminate those discharges or they must be covered under another NPDES permit; this includes the sector-specific non-stormwater discharges that are listed in Part 8 as prohibited (a non-exclusive list is provided only to raise awareness of contaminants or sources of contaminants generally characteristic of certain sectors).

1.2.2.1 **Authorized Non-Stormwater Discharges for All Sectors.** The following are the only non-stormwater discharges authorized under this permit for all sectors provided that all discharges comply with the effluent limits set forth in Parts 2 and 8.

a. Discharges from emergency/unplanned fire-fighting activities;

b. Fire hydrant flushings;

c. Potable water, including uncontaminated water line flushings;

d. Uncontaminated condensate from air conditioners, coolers/chillers, and other compressors and from the outside storage of refrigerated gases or liquids;

e. Irrigation/landscape drainage, provided all pesticides, herbicides, and fertilizers have been applied in accordance with the approved labeling;

f. Pavement wash waters, provided that detergents or hazardous cleaning products are not used (e.g., bleach, hydrofluoric acid, muriatic acid, sodium hydroxide, nonylphenols), and the wash waters do not come into contact with oil and grease deposits, sources of pollutants associated with industrial activities (see Part 6.2.3), or any other toxic or hazardous materials, unless residues are first cleaned up using dry clean-up methods (e.g., applying absorbent materials and sweeping, using hydrophobic mops/rags) and you have implemented appropriate control measures to minimize discharges of mobilized solids and other pollutants (e.g., filtration, detention, settlement);

g. External building/structure washdown / power wash water that does not use detergents or hazardous cleaning products (e.g., those containing bleach, hydrofluoric acid, muriatic acid, sodium hydroxide, nonylphenols) and you have implemented appropriate control measures to minimize discharges of mobilized solids and other pollutants (e.g., filtration, detention, settlement);

h. Uncontaminated ground water or spring water;

i. Foundation or footing drains where flows are not contaminated with process materials;

j. Incidental windblown mist from cooling towers that collects on rooftops or adjacent portions of your facility, but not intentional discharges from the cooling tower (e.g., "piped" cooling tower blowdown; drains); and

k. Any authorized non-stormwater discharge listed above in this Part 1.2.2 or any stormwater discharge listed in Part 1.2.1 mixed with a discharge authorized by a different NPDES permit and/or a discharge that does not require NPDES permit authorization.

1.2.2.2 **Additional Authorized Non-Stormwater Discharge for Sector A Facilities.** Discharges from the spray down of lumber and wood product storage yards where no chemical additives are used in the spray-down waters and no chemicals are applied to the wood during storage, provided the non-stormwater component of the discharge is in compliance with the non-numeric effluent limits requirements in Part 2.1.2.

1.2.2.3 **Additional Authorized Non-Stormwater Discharges for Earth-Disturbing Activities Conducted Prior to Active Mining Activities for Sectors G, H and J Facilities**. The following non-stormwater discharges are only authorized for earth-disturbing activities conducted prior to active mining activities, as defined in Part 8.G.3.2, 8.H.3.2, and 8.J.3.2, provided that, with the exception of water used to control dust, these discharges are not routed to areas of exposed soil and all discharges comply with the permit's effluent limits. Once the earth-disturbing activities conducted prior to active mining activities have ceased, the only authorized non-stormwater discharges for Sectors G, H, and J are those listed here in Part 1.2.2.3:

a. Water used to wash vehicles and equipment, provided that there is no discharge of soaps, solvents, or detergents used for such purposes;

b. Water used to control dust; and

c. Dewatering water that has been treated by an appropriate control under Parts 8.G.4.2.9, 8.H.4.2.9, or 8.J.4.2.9.

1.3 Obtaining Authorization to Discharge

1.3.1 **Prepare Your Stormwater Pollution Prevention Plan (SWPPP) Prior to Submitting Your Notice of Intent (NOI).** You must develop a SWPPP or update your existing SWPPP per Part 6 prior to submitting your NOI for coverage under this permit, per Part 1.3.2 below. You must make your SWPPP publicly available by either attaching it to your NOI, including a URL in your NOI, or providing additional information from your SWPPP on your NOI, per Part 6.4.

1.3.2 **How to Submit Your NOI to Get Permit Coverage.** To be covered under this permit, you must use EPA's NPDES eReporting Tool for the MSGP (NeT-MSGP) to electronically prepare and submit to EPA a complete and accurate NOI by the deadline applicable to your facility presented in Table 1-2. The NOI certifies to EPA that you are eligible for coverage according to Part 1.1 and provides information on your industrial activities and related discharges. Per Part 7.1, you must submit your NOI electronically via NeT-MSGP, unless the applicable EPA Regional Office grants you a waiver from electronic reporting, in which case you may use the paper NOI form in Appendix G. To access NeT-MSGP, go to https://www.epa.gov/npdes/stormwater-discharges-industrial-activities#accessingmsgp

1.3.3 **Deadlines for Submitting Your NOI and Your Official Date of Permit Coverage.** Table 1-2 provides the deadlines for submitting your NOI and your official start date of permit coverage.

Table 1-2. NOI Submittal Deadlines and Discharge Authorization Dates

Category of Facility/Operator	NOI Submission Deadline	Discharge Authorization Date[1, 2]
Existing MSGP facility. Operators of industrial activities whose stormwater discharges were covered under the 2015 MSGP.	No later than May 30, 2021.	30 calendar days after EPA notifies you that it has received a complete NOI, unless EPA notifies you that your authorization has been denied or delayed. Note: You must review and update your SWPPP to ensure that this permit's requirements are addressed prior to submitting your NOI. Provided you submit your NOI in accordance with the deadline, your authorization under the 2015 MSGP is automatically continued until you have been granted coverage under this permit or an alternative permit, or coverage is otherwise terminated.
Operator operating consistent with EPA's No Action Assurance and submitted an Intent to Operate (ITO) form. Operators of industrial activities who commenced discharging between June 4, 2020 and March 1, 2021 and have been operating consistent with EPA's June 3, 2020 'No Action Assurance for the NPDES Stormwater Multi-Sector General Permit for Industrial Activities.'	As soon as possible, but see the June 3, 2020 'No Action Assurance for the NPDES Stormwater Multi-Sector General Permit for Industrial Activities' (and any updates to that document) for additional guidance on deadlines.	30 calendar days after EPA notifies you that it has received a complete NOI, unless EPA notifies you that your authorization has been denied or delayed.
New facility without MSGP coverage. Operators of industrial activities that will commence discharging after March 1, 2021.	At least 30 calendar days prior to commencing discharge.	30 calendar days after EPA notifies you that it has received a complete NOI, unless EPA notifies you that your authorization has been denied or delayed.
Existing facility covered under an alternative permit. Operators seeking coverage for stormwater discharges previously covered under an individual permit or an alternative general permit.	At least 30 calendar days prior to commencing discharge.	

Category of Facility/Operator	NOI Submission Deadline	Discharge Authorization Date[1, 2]
Existing MSGP facility with a new operator. New operators of existing industrial activities with stormwater discharges previously authorized under the 2021 MSGP.	At least 30 calendar days prior to the date of transfer of control to the new operator.	
Existing facility without MSGP coverage. Operators of industrial activities that commenced discharging prior to March 1, 2021, but whose stormwater discharges were not covered under the 2015 MSGP or another NPDES permit and have not been operating consistent with EPA's No Action Assurance for EPA's NPDES MSGP.	Immediately; your stormwater discharges are currently unpermitted.[1]	

[1] If you have missed the deadline to submit your NOI, any and all discharges from your industrial activities will continue to be unauthorized under the CWA until they are covered by this or a different NPDES permit. EPA may take enforcement action for any unpermitted discharges that occur between the commencement of discharging and discharge authorization.

[2] Discharges are not authorized if your NOI is incomplete or inaccurate or if you are ineligible for permit coverage.

1.3.4 **Modifying your NOI.** If after submitting your NOI, you need to correct or update any fields, you may do so by submitting a "Change NOI" form using NeT-MSGP. Per Part 7.1, you must submit your Change NOI electronically via NeT-MSGP, unless the EPA Regional Office grants you a waiver from electronic reporting, in which case you may use the suggested format for the paper Change NOI form.

1.3.4.1 For an existing operator, if any of the information supplied on the NOI changes, you must submit a Change NOI form within thirty (30) calendar days after the change occurs.

1.3.4.2 At a facility where there is a transfer in operator or a new operator takes over operational control at an existing facility, the new operator must submit a new NOI no later than thirty (30) calendar days after a change in operators. The previous operator must submit a Notice of Termination (NOT) no later than thirty (30) calendar days after MSGP coverage becomes active for the new operator, as specified in Part 1.4.

1.3.5 **Requirement to Post a Sign of your Permit Coverage.** You must post a sign or other notice of your permit coverage at a safe, publicly accessible location in close proximity to your facility. Public signage is not required where other laws or local ordinances prohibit such signage, in which case you must document in your SWPPP a brief explanation for why you cannot post a sign and a reference to the law or ordinance. You must use a font large enough to be readily viewed from a public right-of-way and perform periodic maintenance of the sign to ensure that it remains legible, visible, and factually correct. At minimum, the sign must include:

1.3.5.1 The following statement: "[*Name of facility*] is permitted for industrial stormwater discharges under the U.S. EPA's Multi-Sector General Permit (MSGP)";

1.3.5.2 Your NPDES ID number;

1.3.5.3 A contact phone number for obtaining additional facility information;

1.3.5.4 **One** of the following:

a. The Uniform Resource Locator (URL) for the SWPPP (if available), and the following statement: "To report observed indicators of stormwater pollution, contact [*optional: include facility point of contact and*] EPA at: [*include the applicable MSGP Regional Office contact information found at https://www.epa.gov/npdes/contact-us-stormwater#regional*]; **or**

b. The following statement: "To obtain the Stormwater Pollution Prevention Plan (SWPPP) for this facility or to report observed indicators of stormwater pollution, contact [*optional: include facility point of contact and*] EPA at [*include the applicable MSGP Regional Office contact information found at https://www.epa.gov/npdes/contact-us-stormwater#regional*]."

1.3.6 **Your Official End Date of Permit Coverage.** Once covered under this permit, your coverage will last until the date that:

1.3.6.1 You terminate permit coverage by submitting a Notice of Termination (NOT) per Part 1.4; or

1.3.6.2 You receive coverage under a different NPDES permit or a reissued or replacement version of this permit after it expires on February 28, 2026; or

1.3.6.3 You fail to submit an NOI for coverage under a reissued or replacement version of this permit before the required deadline.

1.3.7 Continuation of Coverage for Existing Operators After the Permit Expires

1.3.7.1 Note that if the 2021 MSGP is not reissued or replaced prior to the expiration date, it will be administratively continued in accordance with section 558(c) of the Administrative Procedure Act (see 40 CFR 122.6) and remain in force and effect for operators that were covered prior to its expiration. All operators authorized to discharge prior to the expiration date of the 2021 MSGP will automatically remain covered under the 2021 MSGP until the earliest of:

a. The date the operator is authorized for coverage under a new version of the MSGP following the timely submittal of a complete and accurate NOI. Note that if a timely NOI for coverage under the reissued or replacement permit is not submitted, coverage will terminate on the date that the NOI was due; or

b. The date of the submittal of a Notice of Termination; or

c. Issuance of an individual permit for the facility's discharge(s); or

d. A final permit decision by EPA not to reissue the MSGP, at which time EPA will identify a reasonable time period for covered operators to seek coverage under an alternative general permit or an individual permit. Coverage under the 2021 MSGP will terminate at the end of this time period.

1.3.7.2 EPA reserves the right to modify or revoke and reissue the 2021 MSGP under 40 CFR 122.62 and 63, in which case operators will be notified of any relevant changes or procedures to which they may be subject. If EPA fails to issue another general permit prior to the expiration of a previous one, EPA does not have the authority to provide coverage to industrial operators not already covered under that prior general permit. If the five-year expiration date for the 2021 MSGP has passed and a new MSGP has not been reissued, new operators seeking discharge authorization should contact EPA regarding the options available, such as applying for individual permit coverage.

1.3.8 **Coverage Under Alternative Permits.** EPA may require you to apply for and/or obtain authorization to discharge under an alternative permit, i.e., either an individual NPDES permit or an alternative NPDES general permit, in accordance with 40 CFR 122.64 and 124.5. If EPA requires you to apply for an alternative permit, the Agency will notify you in writing that a permit application or NOI is required. This notification will include a brief statement of the reasons for this decision and will contain alternative permit application or NOI requirements, including deadlines for completing your application or NOI.

1.3.8.1 **Denial of Coverage for New or Previously Unpermitted Facilities.** For new or previously unpermitted facilities, following the submittal of your NOI, you may be denied coverage under this permit and must apply for and/or obtain authorization to discharge under an alternative permit.

1.3.8.2 **Loss of Authorization Under the 2021 MSGP for Existing Permitted Facilities.** If your stormwater discharges are covered under this permit, you may receive a written notification that you must either apply for coverage under an individual NPDES permit or submit an NOI for coverage under an alternative general NPDES permit. In addition to the reasons for the decision and alternative permit application or NOI deadlines, the notice will include a statement that on the effective date of your alternative permit coverage, your coverage under the 2021 MSGP will terminate. EPA will terminate your MSGP permit coverage in NeT-MSGP at that time. EPA may grant additional time to submit the application or NOI if you request it. If you fail to submit an alternative permit application or NOI as required by EPA, then your authorization to discharge under the 2021 MSGP is terminated at the end of the day EPA required you to submit your alternative permit application or NOI. EPA may take appropriate enforcement action for any unpermitted discharge.

1.3.8.3 **Operators Requesting Coverage Under an Alternative Permit.** You may request to be covered under an individual permit. In such a case, you must submit an individual permit application in accordance with the requirements of 40 CFR 122.28(b)(3)(iii), with reasons supporting the request, to the applicable EPA Regional Office listed in Part 7.8 of this permit. The request may be granted by issuance of an individual permit if your reasons are adequate to support the request. When you are authorized to discharge under an alternative permit, your authorization to discharge under the 2021 MSGP is terminated on the effective date of the alternative permit.

1.4 Terminating Permit Coverage

1.4.1 **How to Submit your Notice of Termination (NOT) to Terminate Permit Coverage.** To terminate permit coverage, you must use EPA's NPDES eReporting Tool for the MSGP (NeT-MSGP) to electronically prepare and submit to EPA a complete and accurate NOT. Per Part 7.1, you must submit your NOT electronically via NeT-MSGP, unless the EPA Regional Office grants you a waiver from electronic reporting, in which case you may use the paper NOT form in Appendix H. To access NeT-MSGP, go to https://www.epa.gov/npdes/stormwater-discharges-industrial-activities#accessingmsgp

Your authorization to discharge under this permit terminates at midnight of the day that you are notified that your complete NOT has been processed. If you submit a NOT without meeting one or more of the conditions in Part 1.4.2 then your NOT is not valid.

Until you terminate permit coverage, you must comply with all conditions and effluent limitations in the permit.

1.4.2 **When to Submit Your Notice of Termination.** You must submit a NOT within 30 days after one or more of the following conditions have been met:

1.4.2.1 A new owner or operator has received authorization to discharge under this permit; or

1.4.2.2 You have ceased operations at the facility and/or there are not or no longer will be discharges of stormwater associated with industrial activity from the facility, and you have already implemented necessary sediment and erosion controls per Part 2.1.2.5; or

1.4.2.3 You are a Sector G, H, or J facility and you have met the applicable termination requirements; or

1.4.2.4 You obtained coverage under an individual or alternative general permit for all discharges required to be covered by an NPDES permit, unless EPA terminates your coverage for you per Part 1.3.8.

1.5 Conditional Exclusion for No Exposure

If you are covered by this permit and become eligible for a "no exposure" exclusion from permitting under 40 CFR 122.26(g), you may file a No Exposure Certification (NEC). You are no longer required to have a permit upon submission of a complete and accurate NEC to EPA. If you are no longer required to have permit coverage because of a no exposure exclusion and have submitted a NEC form to EPA, you are not required to submit a NOT. You must submit a NEC form to EPA once every five years.

You must use EPA's NPDES eReporting Tool for the MSGP (NeT-MSGP) to electronically prepare and submit to EPA a complete and accurate NEC. Per Part 7.1, you must submit your NEC electronically via NeT-MSGP, unless the applicable EPA Regional Office grants you a waiver from electronic reporting, in which case you may use the paper NEC form in Appendix K. To access NeT-MSGP, go to https://cdxnodengn.epa.gov/net-msgp/action/login

1.6 Permit Compliance

Any noncompliance with any of the requirements of this permit constitutes a violation of this permit, and thus is a violation of the CWA. As detailed in Part 5, failure to take any required corrective actions constitutes an independent, additional violation of this permit, in addition to any original violation that triggered the need for a corrective action. As such, any actions and time periods specified for remedying noncompliance do not absolve you of the initial underlying noncompliance.

Where an Additional Implementation Measure (AIM) is triggered by an event that does not itself constitute permit noncompliance (i.e., an exceedance of an applicable benchmark), there is no permit violation provided you comply with the required responses within the relevant deadlines established in Part 5.

1.7 Severability

Invalidation of a portion of this permit does not necessarily render the whole permit invalid. EPA's intent is that the permit is to remain in effect to the extent possible; in the event that any part of this permit is invalidated, EPA will advise the regulated community as to the effect of such invalidation.

2. Control Measures and Effluent Limits

In the technology-based limits included in Parts 2.1 and 8, the term "minimize" means to reduce and/or eliminate to the extent achievable using stormwater control measures (SCMs) (including best management practices) that are technologically available and economically practicable and achievable in light of best industry practice. The term "infeasible" means not technologically possible or not economically practicable and achievable in light of best industry practices. EPA notes that it does not intend for any permit requirement to conflict with state water rights law.

2.1 Stormwater Control Measures

You must select, design, install, and implement stormwater control measures (including best management practices) to minimize pollutant discharges that address the selection and design considerations in Part 2.1.1, meet the non-numeric effluent limits in Part 2.1.2, meet limits contained in applicable effluent limitations guidelines in Part 2.1.3, and meet the water quality-based effluent limitations in Part 2.2.

The selection, design, installation, and implementation of control measures to comply with Part 2 must be in accordance with good engineering practices and manufacturer's specifications. Note that you may deviate from such manufacturer's specifications where you provide justification for such deviation and include documentation of your rationale in the part of your SWPPP that describes your control measures, consistent with Part 6.2.4. You must modify your stormwater control measures per Part 5.1 if you find that your control measures are not achieving their intended effect of minimizing pollutant discharges (i.e., your discharges will be controlled as necessary such that the receiving water of the United States will meet applicable water quality standards or meet any of the other non-numeric effluent limits in this permit). Regulated stormwater discharges from your facility include stormwater run-on that commingles with stormwater discharges associated with industrial activity at your facility.

2.1.1 **Stormwater Control Measure Selection and Design Considerations**. You must consider the following when selecting and designing control measures:

2.1.1.1 Preventing stormwater from coming into contact with polluting materials is generally more effective, and less costly, than trying to remove pollutants from stormwater;

2.1.1.2 Using stormwater control measures in combination may be more effective than using control measures in isolation for minimizing pollutants in your stormwater discharge;

2.1.1.3 Assessing the type and quantity of pollutants, including their potential to impact receiving water quality, is critical to designing effective stormwater control measures that will achieve the limits in this permit;

2.1.1.4 Minimizing impervious areas at your facility and infiltrating stormwater onsite (including bioretention cells, green roofs, and pervious pavement, among other approaches) can reduce the frequency and volume of discharges and improve ground water recharge and stream base flows in local streams, although care must be taken to avoid ground water contamination;

2.1.1.5 Attenuating flow using open vegetated swales and natural depressions can reduce in-stream impacts of erosive flows;

2.1.1.6 Conserving and/or restoring riparian buffers will help protect streams from stormwater discharges and improve water quality;

2.1.1.7 Using treatment interceptors (e.g., swirl separators and sand filters) may be appropriate in some instances to minimize the discharge of pollutants; and

2.1.1.8 Implementing structural improvements, enhanced/resilient pollution prevention measures, and other mitigation measures can help to minimize impacts from stormwater discharges from major storm events such as hurricanes, storm surge, extreme/heavy precipitation,[5] and flood events. If such stormwater control measures are already in place due to existing requirements mandated by other state, local or federal agencies, you should document in your SWPPP a brief description of the controls and a reference to the existing requirement(s). If your facility may be exposed to or has previously experienced such major storm events,[6] additional stormwater control measures that may be considered include, but are not limited to:

- **a.** Reinforce materials storage structures to withstand flooding and additional exertion of force;
- **b.** Prevent floating of semi-stationary structures by elevating to the Base Flood Elevation (BFE)[7] level or securing with non-corrosive device;
- **c.** When a delivery of exposed materials is expected, and a storm is anticipated within 48 hours, delay delivery until after the storm or store materials as appropriate (refer to emergency procedures);
- **d.** Temporarily store materials and waste above the BFE level;
- **e.** Temporarily reduce or eliminate outdoor storage;
- **f.** Temporarily relocate any mobile vehicles and equipment to higher ground;
- **g.** Develop scenario-based emergency procedures for major storms that are complementary to regular stormwater pollution prevention planning and identify emergency contacts for staff and contractors; and

---

[5] Heavy precipitation refers to instances during which the amount of rain or snow experienced in a location substantially exceeds what is normal. What constitutes a period of heavy precipitation varies according to location and season. Heavy precipitation does not necessarily mean the total amount of precipitation at a location has increased—just that precipitation is occurring in more intense or more frequent events.

[6] To determine if your facility is susceptible to an increased frequency of major storm events that could impact the discharge of pollutants in stormwater, you may reference FEMA, NOAA, or USGS flood map products at https://www.usgs.gov/faqs/where-can-i-find-flood-maps?qt-news_science_products=0#qt-news_science_products.

[7] Base Flood Elevation (BFE) is the elevation of surface water resulting from a flood that has a 1% chance of equaling or exceeding that level in any given year. The BFE is shown on the Flood Insurance Rate Map (FIRM) for zones AE, AH, A1–A30, AR, AR/A, AR/AE, AR/A1– A30, AR/AH, AR/AO, V1–V30 and VE. (Source: https://www.fema.gov/node/404233). The FEMA Flood Map Service Center can be accessed through https://msc.fema.gov/portal/search.

h. Conduct staff training for implementing your emergency procedures at regular intervals.

Note: Part 2.1.1 requires that you must consider Parts 2.1.1.1 through 2.1.1.8 when selecting and designing control measures to minimize pollutant discharges via stormwater. Part 2.1.1 does not require nor prescribe specific control measure to be implemented; however, you must document in your SWPPP per Part 6.2.4 the considerations made to select and design control measures at your facility to minimize pollutants discharged via stormwater.

2.1.2 **Non-Numeric Technology-Based Effluent Limits (BPT/BAT/BCT).**[8] You must comply with the following non-numeric effluent limits as well as any sector-specific non-numeric effluent limits in Part 8, except where otherwise specified.

Effluent limit requirements in Part 2.1.2 that do not involve the site-specific selection of a control measure or are specific activity requirements (e.g., "Cleaning catch basins when the depth of debris reaches two-thirds (2/3) of the sump depth, in line with manufacturer specifications, whichever is lower, and keeping the debris surface at least six inches below the lowest outlet pipe") are marked with an asterisk (*). When documenting in your SWPPP, per Part 6, how you will comply with the requirements marked with an asterisk, you have the option of including additional information or you may just "copy-and-paste" those effluent limits word-for-word from the permit into your SWPPP without providing additional documentation (see Part 6.2.4).

2.1.2.1 **Minimize Exposure.** You must minimize the exposure of manufacturing, processing, and material storage areas (including loading and unloading, storage, disposal, cleaning, maintenance, and fueling operations) to rain, snow, snowmelt, and stormwater in order to minimize pollutant discharges by either locating these industrial materials and activities inside or protecting them with storm resistant coverings. Unless infeasible, you must also:

a. Use grading, berming or curbing to prevent discharges of contaminated flows and divert run-on away from these areas;

b. Locate materials, equipment, and activities so that potential leaks and spills are contained or able to be contained or diverted before discharge;

c. Store leaky vehicles and equipment indoors;

d. Perform all vehicle and/or equipment cleaning operations indoors, under cover, or in bermed areas that prevent discharges and run-on and also that capture any overspray; and

e. Drain fluids from equipment and vehicles that will be decommissioned, and, for any equipment and vehicles that will remain unused for extended periods of time, inspect at least monthly for leaks.

---

[8] BPT is Best Practicable Control Technology Currently Available, as set forth in CWA section 304(b)(1) and Appendix A; BAT is Best Available Technology Economically Achievable, as set forth in CWA section 304(b)(2) and Appendix A; and BCT is Best Conventional Pollutant Control Technology, as set forth in CWA section 304(b)(4) and Appendix A.

Note: Industrial materials do not need to be enclosed or covered if stormwater from affected areas does not discharge pollutants to waters of the United States or if discharges are authorized under another NPDES permit.

2.1.2.2 **Good Housekeeping.** You must keep clean all exposed areas that are potential sources of pollutants. You must perform good housekeeping measures in order to minimize pollutant discharges, including but not limited to, the following:

a. Sweep or vacuum at regular intervals or, alternatively, wash down the area and collect and/or treat, and properly dispose of the washdown water;

b. Store materials in appropriate containers;

c. Keep all dumpster lids closed when not in use. For dumpsters and roll off boxes that do not have lids and could leak, ensure that discharges have a control (e.g., secondary containment, treatment). Consistent with Part 1.2.2 above, this permit does not authorize dry weather discharges from dumpsters or roll off boxes;*

d. Minimize the potential for waste, garbage and floatable debris to be discharged by keeping exposed areas free of such materials, or by intercepting them before they are discharged.

e. Plastic Materials Requirements: Facilities that handle pre-production plastic must implement control measures to eliminate discharges of plastic in stormwater.[9] Examples of plastic material required to be addressed as stormwater pollutants include plastic resin pellets, powders, flakes, additives, regrind, scrap, waste and recycling.

2.1.2.3 **Maintenance.**

a. **Maintenance Activities.** You must maintain all control measures that are used to achieve the effluent limits in this permit in effective operating condition, as well as all industrial equipment and systems, in order to minimize pollutant discharges. This includes:

ii. Performing inspections and preventive maintenance of stormwater drainage, source controls, treatment systems, and plant equipment and systems that could fail and result in discharges of pollutants via stormwater.

iii. Maintaining non-structural control measures (e.g., keep spill response supplies available, personnel appropriately trained).

iv. Inspecting and maintaining baghouses at least quarterly to prevent the escape of dust from the system and immediately removing any accumulated dust at the base of the exterior baghouse.*

---

[9] Examples of appropriate control measures include but are not limited to: installing a containment system, or other control, at each on-site storm drain discharge point down gradient of areas containing plastic material, designed to trap all particles retained by a 1 mm mesh screen; using a durable sealed container designed not to rupture under typical loading and unloading activities at all points of plastic transfer and storage; using capture devices as a form of secondary containment during transfers, loading, or unloading plastic materials, such as catch pans, tarps, berms or any other device that collects errant material; having a vacuum or vacuum-type system for quick cleanup of fugitive plastic material available for employees; for facilities that maintain outdoor storage of plastic materials, do so in a durable, permanent structure that prevents exposure to precipitation that could cause the material to be discharged via stormwater.

v. Cleaning catch basins when the depth of debris reaches two-thirds (2/3) of the sump depth, or in line with manufacturer specifications, whichever is lower, and keeping the debris surface at least six inches below the lowest outlet pipe.*

b. **Maintenance Deadlines.**

ii. If you find that your control measures need routine maintenance, you must conduct the necessary maintenance immediately in order to minimize pollutant discharges.

iii. If you find that your control measures need to be repaired or replaced, you must immediately take all reasonable steps to prevent or minimize the discharge of pollutants until the final repair or replacement is implemented, including cleaning up any contaminated surfaces so that the material will not be discharged during subsequent storm events. Final repairs/replacement of stormwater controls should be completed as soon as feasible but must be no later than the timeframe established in Part 5.1.3 for corrective actions, i.e., within 14 days or, if that is infeasible, within 45 days. If the completion of stormwater control repairs/replacement will exceed the 45 day timeframe, you may take the minimum additional time necessary to complete the maintenance, provided that you notify the EPA Regional Office of your intention to exceed 45 days, and document in your SWPPP your rationale for your modified maintenance timeframe. If a control measure was never installed, was installed incorrectly or not in accordance with Parts 2 and/or 8, or is not being properly operated or maintained, you must conduct corrective action as specified in Part 5.1.

Note: In this context, the term “immediately” means the day you identify that a control measure needs to be maintained, repaired, or replaced, you must take all reasonable steps to minimize or prevent the discharge of pollutants until you can implement a permanent solution. However, if you identify a problem too late in the work day to initiate action, you must perform the action the following work day morning. “All reasonable steps” means you must respond to the conditions triggering the action, such as, cleaning up any exposed materials that may be discharged in a storm event (e.g., through sweeping, vacuuming) or making arrangements (i.e., scheduling) for a new SCM to be installed.

2.1.2.4 **Spill Prevention and Response.** You must minimize the potential for leaks, spills and other releases that may be exposed to stormwater and develop plans for effective response to such spills if or when they occur in order to minimize pollutant discharges. You must conduct spill prevention and response measures, including but not limited to, the following:

a. Clean up spills and leaks promptly using dry methods (e.g., absorbents) to prevent the discharge of pollutants;

b. Use drip pans and absorbents if leaky vehicles and/or equipment are stored outdoors;

c. Use spill/overflow protection equipment;

d. Plainly label containers (e.g., “Used Oil,” “Spent Solvents,” “Fertilizers and Pesticides”) that could be susceptible to spillage or leakage to encourage proper handling and facilitate rapid response if spills or leaks occur;*

e. Implement procedures for material storage and handling, including the use of secondary containment and barriers between material storage and traffic areas, or a similarly effective means designed to prevent the discharge of pollutants from these areas;

f. Develop training on the procedures for expeditiously stopping, containing, and cleaning up leaks, spills, and other releases. As appropriate, execute such procedures as soon as possible;

g. Keep spill kits onsite, located near areas where spills may occur or where a rapid response can be made; and

h. Notify appropriate facility personnel when a leak, spill, or other release occurs.

Where a leak, spill or other release containing a hazardous substance or oil in an amount equal to or in excess of a reportable quantity established under either 40 CFR Part 110, 40 CFR Part 117, or 40 CFR Part 302, occurs during a 24-hour period, you must notify the National Response Center (NRC) at (800) 424-8802 or, in the Washington, DC, metropolitan area, call (202) 267-2675 in accordance with the requirements of 40 CFR Part 110, 40 CFR Part 117, and 40 CFR Part 302 as soon as you have knowledge of the discharge. State or local requirements may necessitate reporting spills or discharges to local emergency response, public health, or drinking water supply agencies. Contact information must be in locations that are readily accessible and available.

2.1.2.5 **Erosion and Sediment Controls.** To minimize pollutant discharges in stormwater, you must minimize erosion by stabilizing exposed soils at your facility and placing flow velocity dissipation devices at discharge locations to minimize channel and streambank erosion and scour in the immediate vicinity of discharge points. You must also use structural and non-structural control measures to minimize the discharge of sediment. If you use polymers and/or other chemical treatments as part of your controls, you must identify the polymers and/or chemicals used and the purpose in your SWPPP. There are many resources available to help you select appropriate SCMs for erosion and sediment control, including EPA's Stormwater Discharges from Construction Activities website at: https://www.epa.gov/npdes/stormwater-discharges-construction-activities.

2.1.2.6 **Management of Stormwater.** You must divert, infiltrate, reuse, contain, or otherwise reduce stormwater to minimize pollutants in your discharges. In selecting, designing, installing, and implementing appropriate control measures, you are encouraged to consult with EPA's resources relating to stormwater management, including the sector-specific *Industrial Stormwater Fact Sheet Series*, (https://www.epa.gov/npdes/stormwater-discharges-industrial-activities#factsheets) and any similar state or tribal resources.

2.1.2.7 **Salt Storage Piles or Piles Containing Salt.** You must enclose or cover storage piles of salt, or piles containing salt, used for deicing or other commercial or industrial purposes, including maintenance of paved surfaces, in order to minimize pollutant discharges. You must implement appropriate measures (e.g., good housekeeping, diversions, containment) to minimize exposure resulting from adding to or removing materials from the pile. Piles do not need to be enclosed or covered pursuant to this permit if stormwater from the piles is not discharged or if discharges from the piles are authorized under another NPDES permit.

2.1.2.8 **Employee Training.**

a. **Types of Personnel Who Require Training.** You must train all employees who work in areas where industrial materials or activities are exposed to stormwater, or who are responsible for implementing activities necessary to comply with this permit (e.g., inspectors, maintenance personnel), including all members of your stormwater pollution prevention team. You must ensure the following personnel understand the requirements of this permit and their specific responsibilities with respect to those requirements:

i. Personnel who are responsible for the design, installation, maintenance, and/or repair of controls (including pollution prevention measures);

ii. Personnel responsible for the storage and handling of chemicals and materials that could become pollutants discharged via stormwater;

iii. Personnel who are responsible for conducting and documenting monitoring and inspections as required in Parts 3 and 4; and

iv. Personnel who are responsible for taking and documenting corrective actions as required in Part 5.

b. **Areas of Required Training*.*** Personnel must be trained in at least the following if related to the scope of their job duties (e.g., only personnel responsible for conducting inspections need to understand how to conduct inspections):

i. An overview of what is in the SWPPP;

ii. Spill response procedures, good housekeeping, maintenance requirements, and material management practices;

iii. The location of all the controls required by this permit, and how they are to be maintained;

iv. The proper procedures to follow with respect to the permit's pollution prevention requirements; and

v. When and how to conduct inspections, record applicable findings, and take corrective actions; and

vi. The facility's emergency procedures, if applicable per Part 2.1.1.8.

2.1.2.9 **Non-Stormwater Discharges.** You must evaluate for the presence of non-stormwater discharges. You must eliminate any non-stormwater discharges not explicitly authorized in Part 1.2.2 or covered by another NPDES permit, including vehicle and equipment/tank wash water (except for those authorized in Part 1.2.2.3 for Sectors G, H, and J). If not covered under a separate NPDES permit, wastewater, wash water and any other unauthorized non-stormwater must be discharged to a sanitary sewer in accordance with applicable industrial pretreatment requirements, or otherwise disposed of appropriately.

2.1.2.10 **Dust Generation and Vehicle Tracking of Industrial Materials*.*** You must minimize generation of dust and off-site tracking of raw, final, or waste materials in order to minimize pollutants discharged via stormwater.

2.1.3 **Numeric Effluent Limitations Based on Effluent Limitations Guidelines.** If you are in an industrial category subject to one of the effluent limitations guidelines identified in Table 4-3 (see Part 4.2.3.1), you must meet the effluent limits referenced in Table 2-1 below:

Table 2-1. Applicable Effluent Limitations Guidelines

Regulated Activity	40 CFR Part/Subpart	Effluent Limit
Discharges resulting from spray down or intentional wetting of logs at wet deck storage areas	Part 429, Subpart I	See Part 8.A.7
Runoff from phosphate fertilizer manufacturing facilities that comes into contact with any raw materials, finished product, by-products or waste products (SIC 2874)	Part 418, Subpart A	See Part 8.C.4
Runoff from asphalt emulsion facilities	Part 443, Subpart A	See Part 8.D.4
Runoff from material storage piles at cement manufacturing facilities	Part 411, Subpart C	See Part 8.E.5
Mine dewatering discharges at crushed stone, construction sand and gravel, or industrial sand mining facilities	Part 436, Subparts B, C, or D	See Part 8.J.9
Runoff from hazardous waste landfills	Part 445, Subpart A	See Part 8.K.6
Runoff from non-hazardous waste landfills	Part 445, Subpart B	See Part 8.L.10
Runoff from coal storage piles at steam electric generating facilities	Part 423	See Part 8.O.8
Runoff containing urea from airfield pavement deicing at existing and new primary airports with 1,000 or more annual non-propeller aircraft departures	Part 449	See Part 8.S.8

2.2 Water Quality-Based Effluent Limitations

2.2.1 **Water Quality Standards.** Your discharge must be controlled as necessary to meet applicable water quality standards of all affected states.

EPA expects that compliance with the conditions in this permit will control discharges as necessary to meet applicable water quality standards. If at any time you become aware, or EPA determines, that your stormwater discharge will not be controlled as necessary such that the receiving water of the United States will not meet an applicable water quality standard, you must take corrective action(s) as required in Part 5.1 and document the corrective actions as required in Part 5.3. You must also comply with any additional requirements that your state or tribe requires in Part 9.

EPA may also require that you undertake additional control measures (to meet the narrative water quality-based effluent limit above) on a site-specific basis, or require you to obtain coverage under an individual permit, if information in your NOI, required reports, or from other sources indicates that your discharges are not controlled as necessary such that the receiving water of the United States will not meet applicable water quality standards. You must implement all measures necessary to be consistent with an available wasteload allocation in an EPA-established or approved TMDL.

2.2.2 **Discharges to Water Quality-Impaired Waters.** You are considered to discharge to an impaired water if the first water of the United States to which your discharge is identified by a state, tribe or EPA as not meeting an applicable water quality standard, and:

- Requires development of a TMDL (pursuant to section 303(d) of the CWA);
- Is addressed by an EPA-approved or established TMDL; or
- Is not in either of the above categories but the waterbody is covered by a pollution control program that meets the requirements of 40 CFR 130.7(b)(1).

Note: For discharges that enter a separate storm sewer system[10] prior to discharge, the first water of the United States to which you discharge is the waterbody that receives the water from the storm sewer system.

2.2.2.1 **Existing Discharge to an Impaired Water with an EPA-Approved or Established TMDL.** If you discharge to an impaired water with an EPA-approved or established TMDL, EPA will inform you whether any additional measures are necessary for your discharge to be consistent with the assumptions and requirements of the applicable TMDL and its wasteload allocation, or if coverage under an individual permit is necessary per Part 1.3.8.

2.2.2.2 **Existing Discharger to an Impaired Water without an EPA-Approved or Established TMDL.** If you discharge to an impaired water without an EPA-approved or established TMDL, you are still required to comply with Part 2.2.1 and the monitoring requirements of Part 4.2.5.1. Note that the impaired waters monitoring requirements of Part 4.2.5.1 also apply where EPA determines that your discharge is not controlled as necessary such that the receiving water of the United States will not meet applicable water quality standards in an impaired downstream water segment, even if your discharge is initially to a receiving water(s) that is not identified as impaired according to Part 2.2.2.

2.2.2.3 **New Discharger or New Source to an Impaired Water.** If your authorization to discharge under this permit relied on Part 1.1.6.2 for a new discharger or a new source to an impaired water, you must implement and maintain any measures that enabled you to become eligible under Part 1.1.6.2, and modify such measures as necessary pursuant to any Part 5 corrective actions. You also must comply with Part 2.2.1 and the monitoring requirements of Parts 4.2.5.1.

2.2.3 Tier 2 Antidegradation Requirements for New Dischargers, New Sources, or Increased Discharges.

If you are a new discharger or a new source (as defined in Appendix A), or an existing discharger required to notify EPA of an increased discharge consistent with Part 7.6 (i.e., a "planned changes" report), and you discharge directly to waters designated by a state or tribe as Tier 2 or Tier 2.5 for antidegradation purposes under 40 CFR 131.12(a), EPA may require that you undertake additional control measures as necessary to ensure compliance with the applicable antidegradation requirements, or notify you that an individual permit application is necessary in accordance with Part 1.3.8. See list of Tier 2 and 2.5 waters in Appendix L.

2.3 Requirements Relating to Endangered Species, Historic Properties, and CERCLA Sites

If your eligibility under either Part 1.1.4, Part 1.1.5, and/or Part 1.1.7 was made possible through your, or another operator's, agreement to undertake additional measures, you must comply with all such measures to maintain eligibility under the MSGP. Note that if

---

[10] Separate storm systems include both municipal storm sewer systems (MS4s) and non-municipal separate storm sewers. Separate storm systems do not include combined sewer systems or sanitary sewer systems.

at any time you become aware, or EPA determines, that your discharges and/or discharge-related activities have the potential to adversely affect listed species and/or critical habitat, have an effect on historic properties, or that your facility discharges to a CERCLA Site listed in Appendix P after you have obtained coverage under this permit, EPA may inform you of the need to implement additional measures on a site-specific basis to meet the effluent limits in this permit, or require you to obtain coverage under an individual permit.

3. Inspections

3.1 Routine Facility Inspections

3.1.1 **Inspection Personnel.** Qualified personnel (as defined in Appendix A) must perform the inspections. The qualified personnel may be a member of your stormwater pollution prevention team, or if the qualified personnel is a third-party you hire (i.e., a contractor), at least one member of your stormwater pollution prevention team must participate in the inspection. Inspectors must consider the results of visual and analytical monitoring (if any) for the past year when planning and conducting inspections.

3.1.2 **Areas that You Must Inspect.** During normal facility operating hours, the qualified personnel must conduct inspections of areas of the facility covered by the requirements in this permit, including, but not limited to, the following:

3.1.2.1 Areas where industrial materials or activities are exposed to stormwater;

3.1.2.2 Areas identified in the SWPPP and those that are potential pollutant sources (see Part 6.2.3);

3.1.2.3 Areas where spills and leaks have occurred in the past three years;

3.1.2.4 Discharge points; and

3.1.2.5 Control measures used to comply with the effluent limits contained in this permit.

3.1.3 **What You Must Look for During an Inspection.** During the inspection, the qualified personnel must examine or look out for, including, but not limited to, the following:

3.1.3.1 Industrial materials, residue or trash that may have or could come into contact with stormwater;

3.1.3.2 Leaks or spills from industrial equipment, drums, tanks and other containers;

3.1.3.3 Offsite tracking of industrial or waste materials, or sediment where vehicles enter or exit the site;

3.1.3.4 Tracking or blowing of raw, final or waste materials from areas of no exposure to exposed areas;

3.1.3.5 Erosion of soils at your facility, channel and streambank erosion and scour in the immediate vicinity of discharge points, per Part 2.1.2.5;

3.1.3.6 Non-authorized non-stormwater discharges, per Part 2.1.2.9;

3.1.3.7 Control measures needing replacement, maintenance or repair; and

3.1.3.8 During an inspection occurring during a stormwater event or stormwater discharge, you must observe control measures implemented to comply with effluent limits to ensure they are functioning correctly. You must also observe discharge points, as defined in Appendix A, during this inspection. If such discharge locations are inaccessible, you must inspect nearby downstream locations.

3.1.4 **Inspection Frequency.** The qualified personnel must conduct inspections at least quarterly (i.e., once each calendar quarter), or in some instances more frequently (e.g., monthly). Increased frequency may be appropriate for some types of equipment, processes and stormwater control measures, or areas of the facility with significant activities and materials exposed to stormwater. At least once each calendar year, the routine inspection must be conducted during a period when a stormwater discharge is occurring.

3.1.5 **Exceptions to Routine Facility Inspections for Inactive and Unstaffed Facilities.** The requirement to conduct facility inspections on a routine basis does not apply at a facility that is inactive and unstaffed, as long as there are no industrial materials or activities exposed to stormwater. Such a facility is only required to conduct an annual site inspection in accordance with Part 3.1. To invoke this exception, you must indicate that your facility is inactive and unstaffed on your NOI. If you are already covered under the permit and your facility has changed from active to inactive and unstaffed, you must modify and re-certify your NOI. You must also include a statement in your SWPPP per Part 6.2.5.2 indicating that the site is inactive and unstaffed, and that there are no industrial materials or activities exposed to stormwater, in accordance with the substantive requirements in 40 CFR 122.26(g)(4)(iii). The statement must be signed and certified in accordance with Appendix B, Subsection 11. If circumstances change and industrial materials or activities become exposed to stormwater or your facility becomes active and/or staffed, this exception no longer applies, and you must immediately resume routine facility inspections. If you are not qualified for this exception at the time you become authorized under this permit, but during the permit term you become qualified because your facility becomes inactive and unstaffed, and there are no industrial materials or activities exposed to stormwater, you must include the same signed and certified statement as above and retain it with your records pursuant to Part6.5.

Inactive and unstaffed facilities covered under Sectors G (Metal Mining), H (Coal Mines and Coal Mining-Related Facilities), and J (Non-Metallic Mineral Mining and Dressing) are not required to meet the “no industrial materials or activities exposed to stormwater” standard to be eligible for this exception from routine inspections, per Parts 8.G.8.4, 8.H.9.1, and 8.J.9.1.

3.1.6 **Routine Facility Inspection Documentation.** You must document the findings of your facility inspections and maintain this report with your SWPPP as required in Part 6.5. You must conduct any corrective action required as a result of a routine facility inspection consistent with Part 5. If you conducted a discharge visual assessment required in Part 3.2 during your facility inspection, you may include the results of the assessment with the report required in this Part, as long as you include all components of both types of inspections in the report.

Do not submit your routine facility inspection report to EPA, unless specifically requested to do so. However, you must summarize your findings in the Annual Report per Part 7.4. Document all findings, including but not limited to, the following information.

3.1.6.1 The inspection date and time;

3.1.6.2 The name(s) and signature(s) of the inspector(s);

3.1.6.3 Weather information;

3.1.6.4 All observations relating to the implementation of stormwater control measures at the facility, including:

- **a.** A description of any stormwater discharges occurring at the time of the inspection;
- **b.** Any previously unidentified stormwater discharges from and/or pollutants at the facility;
- **c.** Any evidence of, or the potential for, pollutants entering the stormwater drainage system;
- **d.** Observations regarding the physical condition of and around all stormwater discharge points, including any flow dissipation devices, and evidence of pollutants in discharges and/or the receiving water;
- **e.** Any stormwater control measures needing maintenance, repairs, or replacement;

3.1.6.5 Any additional stormwater control measures needed to comply with the permit requirements;

3.1.6.6 Any incidents of noncompliance; and

3.1.6.7 A statement, signed and certified in accordance with Appendix B, Subsection 11.

3.2 Quarterly Visual Assessment of Stormwater Discharges

3.2.1 **Visual Assessment Frequency.** Once each quarter for your entire permit coverage, you must collect a stormwater sample from each discharge point (except as noted in Part 3.2.4) and conduct a visual assessment of each of these samples. These samples are not required to be collected consistent with 40 CFR Part 136 procedures but must be collected in such a manner that the samples are representative of the stormwater discharge. Guidance on monitoring is available at https://www.epa.gov/sites/production/files/2015-11/documents/msgp_monitoring_guide.pdf.

3.2.2 **Visual Assessment Procedures.** You must do the following for the quarterly visual assessment:

3.2.2.1 Make the assessment of a stormwater discharge sample in a clean, colorless glass or plastic container, and examined in a well-lit area;

3.2.2.2 Make the assessment of the sample you collected within the first 30 minutes of an actual discharge from a storm event. If it is not possible to collect the sample within the first 30 minutes of discharge, the sample must be collected as soon as practicable after the first 30 minutes and you must document why it was not possible to take the sample within the first 30 minutes. In the case of snowmelt, samples must be taken during a period with a measurable discharge; and

3.2.2.3 For storm events, make the assessment on discharges that occur at least 72 hours (three days) from the previous discharge. The 72-hour (three-day) storm interval does not apply if you document that less than a 72-hour (three-day) interval is representative for local storm events during the sampling period.

3.2.2.4 Visually inspect or observe for the following water quality characteristics, which may be evidence of stormwater pollution:

- **a.** Color;
- **b.** Odor;
- **c.** Clarity (diminished);
- **d.** Floating solids;
- **e.** Settled solids;
- **f.** Suspended solids;
- **g.** Foam;
- **h.** Oil sheen; and
- **i.** Other obvious indicators of stormwater pollution.

3.2.2.5 Whenever the visual assessment shows evidence of stormwater pollution in the discharge, you must initiate the corrective action procedures in Part 5.1.1.

3.2.3 **Visual Assessment Documentation.** You must document the results of your visual assessments and maintain this documentation onsite with your SWPPP as required in Part 6.5. Any corrective action required as a result of a quarterly visual assessment must be conducted consistent with Part 5 of this permit. You are not required to submit your visual assessment findings to EPA, unless specifically requested to do so. However, you must summarize your findings in the annual report per Part 7.4. Your documentation of the visual assessment must include, but not be limited to:

3.2.3.1 Sample location(s);

3.2.3.2 Sample collection date and time, and visual assessment date and time for each sample;

3.2.3.3 Personnel collecting the sample and conducting visual assessment, and their signatures;

3.2.3.4 Nature of the discharge (i.e., stormwater from rain or snow);

3.2.3.5 Results of observations of the stormwater discharge;

3.2.3.6 Probable sources of any observed stormwater contamination;

3.2.3.7 If applicable, why it was not possible to take samples within the first 30 minutes; and

3.2.3.8 A statement, signed and certified in accordance with Appendix B, Subsection 11.

3.2.4 Exceptions to Quarterly Visual Assessments

3.2.4.1 **Adverse Weather Conditions.** When adverse weather conditions prevent the collection of stormwater discharge sample(s) during the quarter, you must take a substitute sample during the next qualifying storm event. Documentation of the rationale for no visual assessment for the quarter must be included with your SWPPP records as described in Part 6.5. Adverse conditions are those that are dangerous or create inaccessibility for personnel, such as local flooding, high winds, electrical storms, or situations that otherwise make sampling impractical, such as extended frozen conditions.

3.2.4.2 **Climates with Irregular Stormwater Discharges.** If your facility is located in an area where limited rainfall occurs during many parts of the year (e.g., arid or semi-arid climate) or in an area where freezing conditions exist that prevent discharges from occurring for extended periods, then your samples for the quarterly visual assessments may be distributed during seasons when precipitation more regularly occurs.

3.2.4.3 **Areas that Receive Snow.** If the facility is in an area that typically receives snow and the facility receives snow at least once over a period of four quarters, at least one quarterly visual assessment must capture snowmelt discharge, as described in Part 4.1.3, taking into account the exception described above for climates with irregular stormwater discharges.

3.2.4.4 **Inactive and Unstaffed Facilities.** The requirement for a quarterly visual assessment does not apply at a facility that is inactive and unstaffed, as long as there are no industrial materials or activities exposed to stormwater. To invoke this exception, you must maintain a statement in your SWPPP per Part 6.2.5.2 indicating that the site is inactive and unstaffed, and that there are no industrial materials or activities exposed to precipitation, in accordance with the substantive requirements in 40 CFR 122.26(g)(4)(iii). The statement must be signed and certified in accordance with Appendix B, Subsection 11. If circumstances change and industrial materials or activities become exposed to stormwater or your facility becomes active and/or staffed, this exception no longer applies, and you must immediately resume quarterly visual assessments. If you are not qualified for this exception at the time you are authorized under this permit, but during the permit term you become qualified because your facility becomes inactive and unstaffed, and there are no industrial materials or activities that are exposed to stormwater, then you must include the same signed and certified statement as above and retain it with your records pursuant to Part 6.5. Inactive and unstaffed facilities covered under Sectors G (Metal Mining), H (Coal Mines and Coal Mining-Related Facilities), and J (Non-Metallic Mineral Mining and Dressing), are not required to meet the “no industrial materials or activities exposed to stormwater” standard to be eligible for this exception from quarterly visual assessments, consistent with the requirements established in Parts 8.G.8.4, 8.H.9.1, and 8.J.9.1.

3.2.4.5 **Substantially Identical Discharge Points (SIDP).** If your facility has two or more discharge points that discharge substantially identical stormwater effluents, as documented in Part 6.2.5.3, you may conduct quarterly visual assessments of the discharge at just one of the discharge points and report that the results also apply to the SIDPs provided that you conduct visual assessments on a rotating basis of each SIDP throughout the period of your coverage under this permit. If stormwater contamination is identified through visual assessment conducted at a SIDP, you must assess and modify your stormwater control measures as appropriate for each discharge point represented by the monitored discharge point.

4. Monitoring

You must collect and analyze stormwater samples and document monitoring activities consistent with the procedures described in Part 4 and Appendix B, Subsections B.10 – 12, and any additional sector-specific or state/tribal-specific requirements in Parts 8 and 9, respectively. Refer to Part 7 for reporting and recordkeeping requirements.

4.1 Monitoring Procedures

4.1.1 Monitored Stormwater Discharge Points. Applicable monitoring requirements apply to each discharge point authorized by this permit, except as otherwise exempt from monitoring as a "substantially identical discharge point" (SIDP). If your facility has two or more discharge points that you believe discharge substantially identical stormwater effluents, based on the similarities of the general industrial activities and control measures, exposed materials that may significantly contribute pollutants to stormwater, and runoff coefficients of their drainage areas, you may monitor the effluent of just one of the discharge points and report that the results also apply to the SIDP(s). As required in Part 6.2.5.3, your SWPPP must identify each discharge point authorized by this permit and describe the rationale for any SIDP determinations. The allowance for monitoring only one of the SIDP is not applicable to any discharge points with numeric effluent limitations. You are required to monitor each discharge point covered by a numeric effluent limit as identified in Part 4.2.2.

4.1.2 Commingled Discharges. If any authorized stormwater discharges commingle with discharges not authorized under this permit, you must conduct any required sampling of the authorized discharges at a point before they mix with other waste streams, to the extent practicable.

4.1.3 Measurable Storm Events. You must conduct all required monitoring on a storm event that results in an actual discharge ("measurable storm event") that follows the preceding measurable storm event by at least 72 hours (three days). The 72-hour (3-day) storm interval does not apply if you are able to document that less than a 72-hour (3-day) interval is representative for local storm events during the sampling period. In the case of snowmelt, you must conduct monitoring at a time when a measurable discharge occurs.

For each monitoring event, except snowmelt monitoring, you must identify the date and duration (in hours) of the rainfall event, rainfall total (in inches) for that rainfall event, and time (in days) since the previous measurable storm event. For snowmelt monitoring, you must identify the date of the sampling event.

4.1.4 Sample Type. You must take a minimum of one grab sample from a discharge resulting from a measurable storm event as described in Part 4.1.3. You must collect samples within the first 30 minutes of a discharge associated with a measurable storm event. If it is not possible to collect the sample within the first 30 minutes of a measurable storm event, you must collect the sample as soon as possible after the first 30 minutes and keep documentation with the SWPPP explaining why it was not possible to take samples within the first 30 minutes. In the case of snowmelt, you must take samples during a period with a measurable discharge.

For indicator monitoring and benchmark monitoring, you may choose to use a composite sampling method instead of taking grab samples. This composite method may be either flow-weighted or time-weighted and performed manually or with the use of automated sampling equipment. For the purposes of this permit, a flow-weighted composite sample means a composite sample consisting of a mixture of aliquots collected at a constant or variable time interval, where the volume of each aliquot included in the composite sample is proportional to the estimated or measured incremental discharge volume at the time of the aliquot collection compared to the total discharge volume estimated or measured over the monitoring event. For the purposes of this permit, a time-weighted composite sample means a composite sample consisting of a mixture of equal volume aliquots collected at a regular defined time interval over a specific period of time. Composite sampling must be initiated during the first 30 minutes of the same storm event. If it is not possible to initiate composite sampling within the first 30 minutes of a measurable storm event, you must initiate composite sampling as soon as possible after the first 30 minutes and keep documentation with the SWPPP explaining why it was not possible to initiate composite sampling within the first 30 minutes. You must submit all monitoring results to EPA per Part 4.1.9. Composite sampling may not be used in situations where hold times for processing or sample preservation requirements cannot be satisfied. For parameters measured in-situ with a probe or meter such as dissolved oxygen, conductivity, pH, or temperature, the composite sampling method shall be modified by calculating an average all individual measurements, weighted by flow volume if applicable.

4.1.5 **Adverse Weather Conditions.** When adverse weather conditions as described in Part 3.2.4.1 prevent the collection of stormwater discharge samples according to the relevant monitoring schedule, you must take a substitute sample during the next qualifying storm event. Adverse weather does not exempt you from having to file a benchmark monitoring report in accordance with your sampling schedule. As specified in Part 7.4, you must indicate in Net-DMR any failure to monitor during the regular reporting period.

4.1.6 **Facilities in Climates with Irregular Stormwater Discharges.** If your facility is located in areas where limited rainfall occurs during parts of the year (e.g., arid or semi-arid climates) or in areas where freezing conditions exist that prevent discharges from occurring for extended periods, you may distribute your required monitoring events during seasons when precipitation occurs, or when snowmelt results in a measurable discharge from your facility. You must still collect the required number of samples. As specified in Part 7.4, you must also indicate in Net-DMR that there was no monitoring for the respective monitoring period.

4.1.7 **Monitoring Periods.** Your monitoring requirements in this permit begin in the first full quarter following either May 30, 2021or your date of discharge authorization, whichever date comes later.

- January 1 – March 31
- April 1 – June 30
- July 1 – September 30
- October 1 – December 31

For example, if you obtain permit coverage on April 10, 2021, then your first monitoring quarter for benchmark monitoring is– July 1, 2021 – September 30, 2021 and your first monitoring year for discharges to impaired waters or discharges subject to an effluent limitation guideline is July 1, 2021 – June 30, 2022. This monitoring schedule may be modified in accordance with Part 4.1.6 if you document the revised schedule in your SWPPP. However, you must indicate in Net-DMR any 3-month interval that you did not take a sample.

4.1.8 **Monitoring for Authorized Non-Stormwater Discharges.** You are only required to monitor authorized non-stormwater discharges (as delineated in Part 1.2.2) when they are commingled with stormwater discharges associated with industrial activity.

4.1.9 **Monitoring Reports.** You must report monitoring data using Net-DMR, EPA's electronic DMR tool, as described in Part 7.3 (unless the applicable EPA Regional Office grants you a waiver from electronic reporting, in which case you may submit a paper DMR form).

4.2 Required Monitoring

This permit includes six types of required analytical monitoring, one or more of which may apply to your stormwater discharge:

- Indicator monitoring (Part 4.2.1);
- Benchmark monitoring (Part 4.2.2);
- Annual effluent limitations guidelines monitoring (Part 4.2.3);
- State- or tribal-specific monitoring (Part 4.2.4);
- Impaired waters monitoring (Part 4.2.5); and
- Other monitoring as required by EPA (Part 4.2.6).

Unless otherwise specified, samples must be analyzed consistent with 40 CFR Part 136 analytical methods that are sufficiently sensitive for the monitored parameter. When more than one type of monitoring for the same pollutant at the same discharge point applies (e.g., total suspended solids once per year for an effluent limitation and once per quarter for benchmark monitoring at a given discharge point), you may use a single sample to satisfy both monitoring requirements (i.e., one sample satisfying both the annual effluent limitation sample and one of the four quarterly benchmark monitoring samples). Similarly, when the same type of monitoring is required for the same pollutant but for different activities, you may use a single sample to satisfy both monitoring requirements (i.e., when you are required to monitor for PAHs in stormwater discharges from paved surfaces that will be sealed or re-sealed with coal-tar sealcoat where industrial activities are located during coverage under this permit and you are also required to monitor for PAHs in stormwater discharges since you manufacture, use, or store creosote or creosote-treated wood in areas that are exposed to precipitation).

When the effluent limitation is lower than the benchmark threshold for the same pollutant, your Additional Implementation Measure (AIM) trigger is based on an exceedance of the effluent limitation threshold, which would subject you to the AIM requirements of Part 5.2. Exceedance of an effluent limitation associated with the results of any analytical monitoring type required by this Part subjects you to the corrective action requirements of Part 5.1. You must conduct all required monitoring in accordance with the procedures described in Appendix B, Subsection B.10.

Per Part 1.3.7, in the event that the permit is administratively continued, monitoring requirements remain in force and effect at their original frequency during any continuance for operators that were covered prior to permit expiration. In the event that monitoring results are unable to be electronically reported in Net-DMR, operators must maintain monitoring results and records within their SWPPP.

Table 4-1. Summary of Each Type of Monitoring

Monitoring Type	Monitoring Type Applies To	Frequency	Duration	Follow-up Action	Permit Part Reference
Indicator – pH, TSS, COD	Subsectors B2, C5, D2, E3, F5, I1, J3, L2, N2, O1, P1, R1, T1, U3, V1, W1, X1, Y2, Z1, AB1, AC1, and AD1	Quarterly	Entirety of permit coverage	None	Part 4.2.1.1.a
Indicator – PAHs*	Operators with stormwater discharges from paved surfaces that will be sealed or re-sealed with coal-tar sealcoat where industrial activities are located during coverage under this permit; sectors; Sector A facilities that manufacture, use, or store creosote or creosote-treated wood in areas that are exposed to precipitation; and Sectors C (SIC 2911), D, F, H, I, M, O, P (SIC 4011, 4013, and 5171), Q (SIC 4491), R, and S	Bi-annually (2 times per year)	First year and fourth year	None	Part 4.2.1.1.b
Benchmark	Subsectors A1, A2, A3, A4, B1, C1, C2, C3, C4, D1, E1, E2, F1, F2, F3, F4, G1, G2, H1, J1, J2, K1, L1, M1, N1, Q1, S1, U1, U2, Y1, AA1, AA2	Quarterly	First year and fourth year	AIM. See Part 5.2.	Part 4.2.2
Effluent limitation guidelines (ELG)	See Part 4.2.3	Annually	Entirety of permit coverage	See Part 5.1	Part 4.2.3
State- or tribal-specific	Depends on the discharge location of your facility. See Part 9				
Impaired Waters	Depends on the receiving waterbody. See Part 4.2.5				
Other as required by EPA	See Part 4.2.6				

* Monitoring is required for the 16 individual PAHs identified at Appendix A to 40 CFR Part 423: naphthalene, acenaphthylene, acenaphthene, fluorene, phenanthrene, anthracene, fluoranthene, pyrene, benzo[a]anthracene, chrysene, benzo[b]fluoranthene, benzo[k]fluoranthene, benzo[a]pyrene, benzo[g,h,i]perylene, indeno[1,2,3-c,d]pyrene, and dibenz[a,h]anthracene.

4.2.1 **Indicator Monitoring.** This permit requires indicator monitoring of stormwater discharges for three parameters – pH, Total Suspended Solids (TSS), and Chemical Oxygen Demand (COD) – for certain sectors/subsectors (see Part 4.2.1.1.a below) and for polycyclic aromatic hydrocarbons (PAHs) for certain sectors/activities, with additional limitations (see Part 4.2.1.1.b below). Indicator monitoring data will provide you and EPA with a baseline and comparable understanding of industrial stormwater discharge quality and potential water quality problems. The indicator monitoring parameters are “report-only” and do not have thresholds or baseline values for comparison, therefore no follow-up action is triggered or required under this part. The requirement in Part 2.2.1

that your stormwater discharge be controlled as necessary such that the receiving water of the United States will meet applicable water quality standards still applies. You may find it useful to evaluate and compare your indicator monitoring data over time to identify any fluctuating values and why they may be occurring, and to further inform any revisions to your SWPPP/SCMs if necessary.[11] Indicator monitoring is report-only and is neither benchmark monitoring nor an effluent limitation. Instead, it is a permit condition. Thus, failure to conduct indicator monitoring is a permit violation.

4.2.1.1 Applicability and Schedule of Indicator Monitoring

a. pH, Total Suspended Solids (TSS), and Chemical Oxygen Demand (COD).

i. **Applicability.** Operators in the following subsectors must monitor stormwater discharges for pH, TSS, and COD (also specified in the sector-specific requirements in Part 8): B2, C5, D2, E3, F5, I1, J3, L2, N2, O1, P1, R1, T1, U3, V1, W1, X1, Y2, Z1, AB1, AC1, and AD1). Samples must be analyzed consistent with 40 CFR Part 136 analytical methods.

ii. **Schedule.** You must conduct indicator monitoring of stormwater discharges for pH, TSS, and COD each quarter, beginning in your first full quarter of permit coverage as identified in Part 4.1.7.

b. Polycyclic Aromatic Hydrocarbons (PAH).

i. **Applicability.** The following operators must monitor stormwater discharges for the 16 individual priority pollutant PAHs (also specified in the sector-specific requirements in Part 8): operators in all sectors with stormwater discharges from paved surfaces that will be sealed or re-sealed with coal-tar sealcoat where industrial activities are located during coverage under this permit; operators in sectors A (facilities that manufacture, use, or store creosote or creosote-treated wood in areas that are exposed to precipitation), C (SIC Code 2911), D, F, H, I, M, O, P (SIC Codes 4011, 4013, and 5171), Q (SIC Code 4491), R, and S. Monitoring is required for the 16 individual PAHs identified at Appendix A to 40 CFR Part 423: naphthalene, acenaphthylene, acenaphthene, fluorene, phenanthrene, anthracene, fluoranthene, pyrene, benzo[a]anthracene, chrysene, benzo[b]fluoranthene, benzo[k]fluoranthene, benzo[a]pyrene, benzo[g,h,i]perylene, indeno[1,2,3-c,d]pyrene, and dibenz[a,h]anthracene. Samples must be analyzed using EPA Method 625.1, or EPA Method 610/Standard Method 6440B if preferred by the operator, consistent with 40 CFR Part 136 analytical methods.

ii. **Schedule.** You must conduct indicator monitoring of stormwater discharges for PAHs bi-annually (i.e., sample twice per year) in the first and fourth years of permit coverage. Your first year of permit coverage begins in your first full quarter of permit coverage, identified in Part 4.1.7, commencing no earlier than May 30, 2021, followed by two years of no monitoring. Bi-annual monitoring resumes in your fourth year of permit coverage for another year,

---

[11] Examples of possible reviews and revisions to the SWPPP/SCMs that could be informed by indicator monitoring values include: reviewing sources of pollution or any changes to performed industrial activities and processes; reviewing spill and leak procedures, and/or non-stormwater discharges; conducting a single comprehensive clean-up, implementing a new control measure, and/or increasing inspections. EPA notes, however, that these actions are not required under the 2021 MSGP in response to indicator monitoring.

after which you may discontinue bi-annual PAH monitoring for the remainder of your permit coverage.

4.2.1.2 **Exception for Facilities in Climates with Irregular Stormwater Discharges**. As described in Part 4.1.6, facilities in climates with irregular stormwater discharges may modify this schedule provided you report this revised schedule directly to EPA by the due date of the first indicator monitoring sample (see EPA Regional contacts in Part 7.8), and you keep this revised schedule with the facility's SWPPP as specified in Part 6.5. As noted in Part 4.1.7, you must indicate in Net-DMR any 3-month interval that you did not take a sample.

4.2.1.3 **Exception for Inactive and Unstaffed Facilities.** The requirement for indicator monitoring does not apply at a facility that is inactive and unstaffed, provided that there are no industrial materials or activities exposed to stormwater. To invoke this exception, you must do the following:

a. Maintain a statement with your SWPPP stating that the site is inactive and unstaffed, and that there are no industrial materials or activities exposed to stormwater in accordance with the substantive requirements in 40 CFR 122.26(g) and sign and certify the statement in accordance with Appendix B, Subsection 11.

b. If circumstances change and industrial materials or activities become exposed to stormwater or your facility becomes active and/or staffed, this exception no longer applies and you must immediately begin complying with the applicable indicator monitoring requirements under Part 4.2.1 as if you were in your first year of permit coverage. You must indicate in your NOI that your facility has materials or activities exposed to stormwater or has become active and/or staffed.

c. If you are not qualified for this exception at the time you are authorized under this permit, but during the permit term you become qualified because your facility is inactive and unstaffed, and there are no industrial materials or activities that are exposed to stormwater, then you must notify EPA of this change on your NOI form. You may discontinue indicator monitoring once you have notified EPA, and prepared and signed the certification statement described above concerning your facility's qualification for this special exception.

Note: This exception has different requirements for Sectors G, H, and J (see Part 8).

4.2.2 **Benchmark Monitoring.** This permit requires benchmark monitoring parameters of stormwater discharges for certain sectors/subsectors. Benchmark monitoring data are primarily for your use to determine the overall effectiveness of your stormwater control measures and to assist you in determining when additional action(s) may be necessary to comply with the effluent limitations in Part 2.

The benchmark thresholds are not effluent limitations; a benchmark exceedance, therefore, is not a permit violation. However, if a benchmark exceedance triggers Additional Implementation Measures (AIM) in Part 5.2, failure to conduct any required measures is a permit violation. At your discretion, you may take more than four samples during separate stormwater discharge events to determine the average benchmark parameter value for facility discharges.

4.2.2.1 Applicability of Benchmark Monitoring.

You must monitor stormwater discharges for any benchmark parameters specified for the industrial sector(s), both primary industrial activity and any co-located industrial activities, applicable to your discharge listed in Part 8. If your facility is in one of the industrial sectors subject to benchmark thresholds that are hardness-dependent, you must include in your NOI a hardness value, established consistent with the procedures in Appendix J, that is representative of your receiving water. Hardness is not a specific benchmark and therefore the permit does not include a benchmark threshold with which to compare.

Samples must be analyzed consistent with 40 CFR Part 136 analytical methods and using test procedures with quantitation limits at or below benchmark thresholds for all benchmark parameters for which you are required to sample, i.e. sufficiently sensitive methods. For averaging purposes, you may use a value of zero for any individual sample parameter which is determined to be less than the method detection limit. For sample values that fall between the method detection limit and the quantitation limit (i.e., a confirmed detection but below the level that can be reliably quantified), use a value halfway between zero and the quantitation limit.

4.2.2.2 Summary of the 2021 MSGP Benchmark Thresholds

The Table 4-2 presents the 2021 MSGP's freshwater and saltwater benchmark thresholds. Sector-specific benchmark requirements are detailed in Part 8. Values match the original units found in the source documents, detailed in the corresponding section of the fact sheet.

Table 4-2 2021 MSGP Benchmark Thresholds

Pollutant		2021 MSGP Benchmark Threshold
Total Recoverable Aluminum (T)		1,100 µg/L
Total Recoverable Beryllium		130 µg/L
Biochemical Oxygen Demand (5-day)		30 mg/L
pH		6.0 – 9.0 s.u.
Chemical Oxygen Demand		120 mg/L
Total Phosphorus		2.0 mg/L
Total Suspended Solids (TSS)		100 mg/L
Nitrate and Nitrite Nitrogen		0.68 mg/L
Turbidity		50 NTU
Total Recoverable Antimony		640 µg/L
Ammonia		2.14 mg/L
Total Recoverable Cadmium	Freshwater[a]	1.8 µg/L
	Saltwater	33 µg/L
Total Recoverable Copper	Freshwater	5.19 µg/L
	Saltwater	4.8 µg/L

Pollutant		2021 MSGP Benchmark Threshold
Total Recoverable Cyanide	Freshwater	22 µg/L
	Saltwater	1 µg/L
Total Recoverable Mercury	Freshwater	1.4 µg/L
	Saltwater	1.8 µg/L
Total Recoverable Nickel	Freshwater [a]	470 µg/L
	Saltwater	74 µg/L
Total Recoverable Selenium	Freshwater	1.5 µg/L for still/standing (lentic) waters 3.1 µg/L for flowing (lotic) waters
	Saltwater	290 µg/L
Total Recoverable Silver	Freshwater [a]	3.2 µg/L
	Saltwater	1.9 µg/L
Total Recoverable Zinc	Freshwater [a]	120 µg/L
	Saltwater	90 µg/L
Total Recoverable Arsenic	Freshwater [a]	150 µg/L
	Saltwater	69 µg/L
Total Recoverable Lead	Freshwater [a]	82 µg/L
	Saltwater	210 µg/L

[a] These pollutants are dependent on water hardness where discharged into freshwaters. The freshwater benchmark value listed is based on a hardness of 100 mg/L. When a facility analyzes receiving water samples for hardness, the operator must use the hardness ranges provided in Table 1 in Appendix J of the 2021 MSGP and in the appropriate tables in Part 8 of the 2021 MSGP to determine applicable benchmark values for that facility. Benchmark thresholds for discharges of these pollutants into saline waters are not dependent on receiving water hardness and do not need to be adjusted.

4.2.2.3 **Benchmark Monitoring Schedule.** Benchmark monitoring of stormwater discharges is required quarterly, as identified in Part 4.1.7, in the first and fourth year of permit coverage, as follows:

a. **Year one of permit coverage:** You must conduct benchmark monitoring for all parameters applicable to your subsector(s) for four quarters in your first year of permit coverage, beginning in your first *full* quarter of permit coverage, no earlier than May 30, 2021.

i. If the annual average[12] for a parameter does not exceed the benchmark threshold, you can discontinue benchmark monitoring for that parameter for the next two years (i.e., eight quarters).

---

[12] For this permit, an annual average exceedance for a parameter can occur if: (a) The four-quarter annual average for a parameter exceeds the benchmark threshold; or (b) Fewer than four quarterly samples are collected, but a single sample or the sum of any sample results within the sampling year exceeds the benchmark threshold by more than four times for a parameter. The result in (b) indicates an exceedance is mathematically certain (i.e., the sum of quarterly sample results to date is already more than four times the benchmark threshold). For pH, an annual average exceedance can only occur if the four-quarter annual average exceeds the benchmark threshold.

   ii. If the annual average for a parameter exceeds the benchmark threshold, you must comply with Part 5.2 (Additional Implementation Measures responses and deadlines) and continue quarterly benchmark monitoring for that parameter until results indicate that the annual average is no longer exceeded, after which you can discontinue benchmark monitoring for that parameter until monitoring resumes in year four of permit coverage, per Part 4.2.2.3.b below.

b. **Year four of permit coverage:** You must conduct benchmark monitoring for all parameters applicable to your subsector(s) for four quarters in your fourth year of permit coverage (i.e., your thirteenth through sixteenth quarters), unless the first quarter of your fourth year of permit coverage occurs on or after the date this permit expires.

   i. If the annual average[13] for a parameter does not exceed the benchmark threshold, you can discontinue benchmark monitoring for that parameter for the remainder of your permit coverage.

   ii. If the annual average for a parameter exceeds the benchmark threshold, you must comply with Part 5.2 (Additional Implementation Measures responses and deadlines) and continue quarterly benchmark monitoring for that parameter until results indicate that the annual average is no longer exceeded, after which you can discontinue benchmark monitoring for that parameter for the remainder of permit coverage.

4.2.2.4 **Exception for Facilities in Climates with Irregular Stormwater Discharges**. As described in Part 4.1.6, facilities in climates with irregular stormwater discharges may modify this quarterly schedule provided you report this revised schedule directly to EPA by the due date of the first benchmark sample (see EPA Regional contacts in Part 7.8), and you keep this revised schedule with the facility's SWPPP as specified in Part 6.5. When conditions prevent you from obtaining four samples in four consecutive quarters, you must continue monitoring until you have the four samples required for calculating your benchmark monitoring average. As noted in Part 4.1.7, you must indicate in Net-DMR any 3-month interval that you did not take a sample.

4.2.2.5 **Exception for Inactive and Unstaffed Facilities.** The requirement for benchmark monitoring does not apply at a facility that is inactive and unstaffed, provided that there are no industrial materials or activities exposed to stormwater. To invoke this exception, you must do the following:

a. Maintain a statement with your SWPPP stating that the site is inactive and unstaffed, and that there are no industrial materials or activities exposed to stormwater in accordance with the substantive requirements in 40 CFR 122.26(g) and sign and certify the statement in accordance with Appendix B, Subsection 11.

b. If circumstances change and industrial materials or activities become exposed to stormwater or your facility becomes active and/or staffed, this exception no longer applies and you must immediately begin complying with the applicable benchmark monitoring requirements under Part 4.2.2 as if you were in your first year of permit coverage. You must indicate in your NOI that your facility has

---

[13] *Ibid*.

materials or activities exposed to stormwater or has become active and/or staffed.

c. If you are not qualified for this exception at the time you are authorized under this permit, but during the permit term you become qualified because your facility is inactive and unstaffed, and there are no industrial materials or activities that are exposed to stormwater, then you must notify EPA of this change on your NOI form. You may discontinue benchmark monitoring once you have notified EPA, and prepared and signed the certification statement described above concerning your facility's qualification for this special exception.

Note: This exception has different requirements for Sectors G, H, and J (see Part 8).

4.2.3 Effluent Limitations Monitoring

4.2.3.1 **Monitoring Based on Effluent Limitations Guidelines.** Table 4-3 identifies the stormwater discharges subject to effluent limitation guidelines that are authorized for coverage under this permit. An exceedance of the effluent limitation is a permit violation. Beginning in the first full quarter following May 30, 2021 or your date of discharge authorization, whichever date comes later, you must monitor once per year at each stormwater discharge point containing the discharges identified in Table 4-3 for the parameters specified in the sector-specific section of Part 8.

Table 4-3. Required Monitoring for Effluent Limits Based on Effluent Limitations Guidelines

Regulated Activity	Effluent Limit	Monitoring Frequency	Sample Type
Discharges resulting from spray down or intentional wetting of logs at wet deck storage areas	See Part 8.A.8	1/year	Grab
Runoff from phosphate fertilizer manufacturing facilities that comes into contact with any raw materials, finished product, by-products or waste products (SIC 2874)	See Part 8.C.5	1/year	Grab
Runoff from asphalt emulsion facilities	See Part 8.D.5	1/year	Grab
Runoff from material storage piles at cement manufacturing facilities	See Part 8.E.6	1/year	Grab
Mine dewatering discharges at crushed stone, construction sand and gravel, or industrial sand mining facilities	See Part 8.J.10	1/year	Grab
Runoff from hazardous waste landfills	See Part 8.K.7	1/year	Grab
Runoff from non-hazardous waste landfills	See Part 8.L.11	1/year	Grab
Runoff from coal storage piles at steam electric generating facilities	See Part 8.O.8	1/year	Grab
Runoff containing urea from airfield pavement deicing at existing and new primary airports with 1,000 or more annual non- propeller aircraft departures.	See Part 8.S.9	1/year	Grab

4.2.3.2 **Substantially Identical Discharge Points Not Applicable.** You must monitor each discharge point discharging stormwater from any regulated activity identified in Table

4-3. The substantially identical discharge points (SIDP) monitoring provisions are not available for numeric effluent limit monitoring.

4.2.3.3 **Follow-up Actions if Discharge Exceeds Numeric Effluent Limitation*.*** If any monitoring value exceeds a numeric effluent limitation contained in this permit, you must indicate the exceedance on a "Change NOI" form in the NPDES eReporting Tool (NeT), and you must conduct follow-up monitoring within 30 calendar days (or during the next measurable storm event, should none occur within 30 days) of implementing corrective action(s) taken per Part 5.1. If your follow-up monitoring exceeds the applicable effluent limitation, you must:

a. **Submit an Exceedance Report:** You must submit an Exceedance Report no later than 30 days after you have received your laboratory result consistent with Part 7.5; and

b. **Continue to Monitor*:*** You must monitor, at least quarterly, until your stormwater discharge is in compliance with the effluent limit or until EPA waives the requirement for additional monitoring. Once your discharge is back in compliance with the effluent limitation you must indicate this on a "Change NOI" form per Part 7.3.

4.2.4 State or Tribal Required Monitoring

4.2.4.1 **Sectors Required to Conduct State or Tribal Monitoring.** You must comply with any state or tribal monitoring requirements in Part 9 of the permit applicable to your facility's discharge location.

4.2.4.2 **State or Tribal Monitoring Schedule*.*** If a monitoring frequency is not specified foran applicable requirement in Part 9, you must monitor once per year for the duration of your permit coverage.

4.2.5 **Impaired Waters Monitoring.** For the purposes of this permit, your facility is considered to discharge to an impaired water if the first water of the United States to which you discharge is identified by a state, tribe, or EPA pursuant to section 303(d) of the CWA as not meeting an applicable water quality standard (i.e., without an EPA-approved or -established TMDL, see Part 4.2.5.1.a below), or has been removed from the 303(d) list either because the impairments are addressed by an EPA-approved or established TMDL or is covered by pollution control requirements that meet the requirements of 40 CFR 130.7(b)(1) (see Part 4.2.5.1.b below). For discharges that enter a separate storm sewer system[14] prior to discharge, the first water of the United States to which you discharge is the waterbody that receives the stormwater discharge from the separate storm sewer system.

4.2.5.1 Facilities Required to Monitor Stormwater Discharges to Impaired Waters.

a. **Discharges to impaired waters without an EPA-approved or established TMDL:**

Monitoring is required annually in the first year of permit coverage and again in the fourth year of permit coverage as follows, unless you detect a pollutant causing an impairment, in which case annual monitoring must continue.

---

[14] Separate storm sewer systems do not include combined sewer systems or sanitary sewer systems. Separate storm sewer systems include both municipal storm sewer systems (MS4s) and non-municipal separate storm sewers.

i. **Year one of permit coverage:** You must take your first annual sample in your first year of permit coverage, which begins in the first full quarter following May 30, 2021 or your date of discharge authorization, whichever date comes later. You must monitor for all pollutants causing impairments using a standard analytical method, provided one exists (see 40 CFR Part 136), once at each discharge point (except substantially identical discharge points) discharging stormwater to impaired waters without an EPA-approved or established TMDL. *Note*: Except where otherwise directed by EPA, if the pollutant of concern for the impaired waterbody is suspended solids, turbidity, or sediment/sedimentation, you must monitor for Total Suspended Solids (TSS). If a pollutant of concern is expressed in the form of an indicator or surrogate pollutant, you must monitor for that indicator or surrogate pollutant. No monitoring is required when a waterbody's biological communities are impaired but no pollutant, including indicator or surrogate pollutants, is specified as causing the impairment, or when a waterbody's impairment is related to hydrologic modifications, impaired hydrology, or other non-pollutant. Operators must consult the applicable EPA Regional Office for any available guidance regarding required monitoring parameters under this part.

   1) If monitoring results indicate the monitored pollutant is not detected in your discharge, or is within the acceptable range for a given parameter for the waterbody to meet its designated use (e.g., pH or temperature),[15] you may discontinue monitoring for that pollutant for the next two years. You must resume monitoring for that pollutant in year four of permit coverage, if applicable, per Part 4.2.5.1.a.ii.

   2) If monitoring results indicate that the monitored pollutant is detected in your stormwater discharge, or is outside the acceptable range for a given parameter (e.g., pH or temperature) for the waterbody to meet its designated use,[16] you must continue to monitor for the pollutant(s) annually until no longer detected, after which you may discontinue monitoring for that pollutant until monitoring resumes in year four of permit coverage, if applicable, per Part 4.2.5.1.a.ii.

ii. **Year four of permit coverage.** Annual monitoring resumes in your fourth year of permit coverage for another year for a sub-set of parameters monitored for in the first monitoring year. In the fourth year of permit coverage, you must monitor for all pollutants causing impairment(s) that are associated with your industrial activity and/or are listed as a benchmark parameter for your subsector(s) (regardless of whether you have satisfied benchmark monitoring for the parameter per Part 4.2.2). To determine these pollutants, start with the list of pollutants for which the receiving waterbody is impaired and for which a standard analytical method exists (see 40 CFR Part 136), then compare that list to the industrial pollutants you identified in Part 6.2.3.2 and any sector-specific benchmark monitoring pollutants in Part 8 and, if applicable, Part 9. You must monitor for pollutants that appear on both the impairments list and either your industrial pollutants and/or your benchmark parameter list, including "indicator" or "surrogate" pollutants (as described in the "note" in 1 above). You must monitor once at each discharge point (except

---

[15] Refer to your state's Water Quality Standards or contact the EPA Regional Office for assistance.
[16] *Ibid*.

substantially identical discharge points (SIDPs)) for these pollutants. Consistent with Part 4.2, annual samples may be used to also satisfy any single remaining quarterly benchmark monitoring requirement applicable to your discharge.

1) If monitoring results indicate the monitored pollutant is not detected in your discharge, or is within the acceptable range for a given parameter for the waterbody to meet its designated use (e.g., pH or temperature),[17] you may discontinue monitoring for that pollutant for the remainder of your permit coverage.

2) If the monitoring results indicate that the monitored pollutant is detected in your discharge, or is outside the acceptable range for a given parameter (e.g., pH or temperature) for the waterbody to meet its designated use, you must continue to monitor for the pollutant(s) annually until no longer detected, after which you may discontinue monitoring for that pollutant for the remainder of your permit coverage.

iii. ***Exception***: If sampling results in either Part 4.2.5.1.a.i or Part 4.2.5.1.a.ii above indicate the monitored pollutant is detected in your discharge, but you have determined that its presence is caused solely by natural background sources, you may discontinue monitoring for that pollutant for the duration of your permit coverage.

To support a determination that the pollutant's presence is caused solely by natural background sources, you must document and maintain with your SWPPP, as required by Part 6.5:

1) An explanation of why you believe that the presence of the pollutant of concern in your discharge is not related to the activities or materials at your facility; and

2) Data and/or studies that tie the presence of the pollutant of concern in your discharge to natural background sources in the watershed.

Natural background pollutants include those that occur naturally as a result of native soils, and vegetation, wildlife, or ground water. Natural background pollutants do not include legacy pollutants from earlier activity on your site, or pollutants in run-on from neighboring sources that are not naturally occurring. However, you may be eligible to discontinue annual monitoring for pollutants that occur solely from these sources and should consult the applicable EPA Regional Office for related guidance.

b. **Discharges to impaired waters with an EPA-approved or established TMDL:** For stormwater discharges to waters for which there is an EPA-approved or established TMDL, you are not required to monitor for the pollutant(s) for which the TMDL was written unless EPA informs you, upon examination of the applicable TMDL and its wasteload allocation, that you are subject to such a requirement consistent with the assumptions and findings of the applicable TMDL and its wasteload allocation. EPA's notice will include specifications on stormwater discharge monitoring parameters and frequency. If there are questions, you may consult the applicable EPA Regional Office for guidance regarding required monitoring under this Part.

---

[17] *Ibid*.

4.2.5.2 **Exception for Inactive and Unstaffed Facilities.** The requirement for impaired waters monitoring does not apply at a facility that is inactive and unstaffed, as long as there are no industrial materials or activities exposed to stormwater. To invoke this exception, you must do the following:

a. Maintain a statement with your SWPPP stating that the site is inactive and unstaffed, and that there are no industrial materials or activities exposed to stormwater in accordance with the substantive requirements in 40 CFR 122.26(g) and sign and certify the statement in accordance with Appendix B, Subsection 11.

b. If circumstances change and industrial materials or activities become exposed to stormwater or your facility becomes active and/or staffed, this exception no longer applies and you must immediately begin complying with the applicable impaired waters monitoring requirements under Part 4.2.5 as if you were in your first year of permit coverage. You must indicate in a "Change NOI" form per Part 7.2 that your facility has materials or activities exposed to stormwater or has become active and/or staffed.

c. If you are not qualified for this exception at the time you are authorized under this permit, but during the permit term you become qualified because your facility is inactive and unstaffed, and there are no industrial materials or activities that are exposed to stormwater, then you must notify EPA of this change on your NOI form. You may discontinue impaired waters monitoring once you have notified EPA, and prepared and signed the certification statement described above concerning your facility's qualification for this special exception.

Note: This exception has different requirements for Sectors G, H, and J (see Part 8).

4.2.6 **Additional Monitoring Required by EPA.** EPA may notify you of additional stormwater discharge monitoring requirements that EPA determines are necessary to meet the permit's effluent limitations. Any such notice will briefly state the reasons for the monitoring, locations, and parameters to be monitored, frequency and period of monitoring, sample types, and reporting requirements.

5. Corrective Actions and Additional Implementation Measures (AIM)

5.1 Corrective Action

5.1.1 **Conditions Requiring SWPPP Review and Revision to Ensure Effluent Limits are Met.** When any of the following conditions occur or are detected during an inspection, monitoring or other means, or EPA or the operator of the MS4 through which you discharge informs you that any of the following conditions have occurred, you must review and revise, as appropriate, your SWPPP (e.g., sources of pollution; spill and leak procedures; non-stormwater discharges; the selection, design, installation and implementation of your stormwater control measures) so that this permit's effluent limits are met and pollutant discharges are minimized:

5.1.1.1 An unauthorized release or discharge (e.g., spill, leak, or discharge of non-stormwater not authorized by this or another NPDES permit to a water of the United States) occurs at your facility.

5.1.1.2 A discharge violates a numeric effluent limit listed in Table 2-1 and/or in your Part 8 sector-specific requirements.

5.1.1.3 Your stormwater control measures are not stringent enough for your stormwater discharge to be controlled as necessary such that the receiving water of the United States will meet applicable water quality standards or to meet the non-numeric effluent limits in this permit.

5.1.1.4 A required control measure was never installed, was installed incorrectly, ornot in accordance with Parts 2 and/or 8, or is not being properly operated or maintained.

5.1.1.5 Whenever a visual assessment shows evidence of stormwater pollution (e.g., color, odor, floating solids, settled solids, suspended solids, foam).

5.1.2 **Conditions Requiring SWPPP Review to Determine if Modifications Are Necessary.** If construction or a change in design, operation, or maintenance at your facility occurs that significantly changes the nature of pollutants discharged via stormwater from your facility, or significantly increases the quantity of pollutants discharged, you must review your SWPPP (e.g., sources of pollution, spill and leak procedures, non-stormwater discharges, selection, design, installation and implementation of your stormwater control measures) to determine if modifications are necessary to meet the effluent limits in this permit.

5.1.3 Deadlines for Corrective Actions

5.1.3.1 **Immediate Actions.** You must immediately take all reasonable steps to minimize or prevent the discharge of pollutants until you can implement a permanent solution, including cleaning up any contaminated surfaces so that the material will not discharge in subsequent storm events. In Part 5, the term “immediately” means that the day you find a condition requiring corrective action, you must take all reasonable steps to minimize or prevent the discharge of pollutants until you can implement a permanent solution. However, if you identify a problem too late in the work day to initiate corrective action, you must perform the corrective action the following work day morning. The term “all reasonable steps” means you must respond to the conditions triggering the corrective action, such as cleaning up any exposed materials that may be discharged in a storm event (e.g., through sweeping, vacuuming) or making arrangements (i.e., scheduling) for a new SCM to be installed.

5.1.3.2 **Subsequent Actions.** If additional actions are necessary beyond those implemented pursuant to Part 5.1.3.1, you must complete the corrective actions (e.g., install a new or modified control and make it operational, complete the repair) before the next storm event if possible, and within 14 calendar days from the time of discovery that the condition in Part 5.1.1 is not met. If it is infeasible to complete the corrective action within 14 calendar days, you must document why it is infeasible to complete the corrective action within the 14-day timeframe. You must also identify your schedule for completing the work, which must be done as soon as practicable after the 14-day timeframe but no longer than 45 days after discovery. If the completion of corrective action will exceed the 45-day timeframe, you may take the minimum additional time necessary to complete the corrective action, provided that you notify the appropriate EPA Regional Office of your intention to exceed 45 days, your rationale for an extension, and a completion date, which you must also include in your corrective action documentation (see Part 5.3). Where your corrective actions result in changes to any of the controls or procedures documented in your SWPPP, you must modify your SWPPP accordingly within 14 calendar days of completing corrective action work.

These time intervals are not grace periods, but are schedules considered reasonable for documenting your findings and for making repairs and improvements. They are included in this permit to ensure that the conditions prompting the need for these repairs and improvements do not persist indefinitely.

5.1.4 **Effect of Corrective Action.** If the event triggering the review is a permit violation (e.g., non-compliance with an effluent limit), correcting it does not remove the original violation. Additionally, failing to take corrective action in accordance with this section is an additional permit violation. EPA may consider the appropriateness and promptness of corrective action in determining enforcement responses to permit violations.

5.1.5 **Substantially Identical Discharge Points.** If the event triggering corrective action is associated with a discharge point that had been identified as a "substantially identical discharge point" (SIDP) (see Parts 3.2.4.5 and 4.1.1), your review must assess the need for corrective action for all related SIDPs. Any necessary changes to control measures that affect these other discharge points must also be made before the next storm event if possible, or as soon as practicable following that storm event. Any corrective actions must be conducted within the timeframes set forth in Part 5.1.3.

5.2 Additional Implementation Measures (AIM)

If any of the following AIM triggering events in Parts 5.2.3, 5.2.4, or 5.2.5 occur, you must follow the response procedures described in those parts, called "additional implementation measures" or "AIM." There are three AIM levels: AIM Level 1, Level 2, and Level 3. You must respond as required to different AIM levels which prescribe sequential and increasingly robust responses when a benchmark exceedance occurs. You must follow the corresponding AIM level responses and deadlines described in Parts 5.2.1, 5.2.2, and 5.2.3 unless you qualify for an exception under Part 5.2.6.

5.2.1 Baseline Status

Once you receive discharge authorization under this permit per Part 1.3, you are in a baseline status for all applicable benchmark parameters. If an AIM triggering event occurs and you have proceeded sequentially to AIM Level 1, 2 or 3, you may return directly to baseline status once the corresponding AIM-level response and conditions are met.

5.2.2 **AIM Triggering Events.** If an annual average exceeds an applicable benchmark threshold based on the following events, the AIM requirements have been triggered for that benchmark parameter. You must follow the corresponding AIM-level responses and deadlines described in Parts 5.2.3, 5.2.4, and 5.2.5 unless you qualify for an exception under Part 5.2.6. An annual average exceedance for a parameter can occur if:

5.2.2.1 The four-quarterly annual average for a parameter exceeds the benchmark threshold, or

5.2.2.2 Fewer than four quarterly samples are collected, but a single sample or the sum of any sample results within the sampling year exceeds the benchmark threshold by more than four times for a parameter. This result indicates an exceedance is mathematically certain (i.e., the sum of quarterly sample results to date is already more than four times the benchmark threshold).[18]

5.2.3 AIM Level 1

Your status changes from baseline to AIM Level 1 if quarterly benchmark monitoring results indicate that an AIM triggering event per Part 5.2.2 has occurred, unless you qualify for an exception under Part 5.2.6.

5.2.3.1 **AIM Level 1 Responses.** If any of the triggering events in Part 5.2.2 occur, you must:

a. **Review SWPPP/Stormwater Control Measures.** Immediately review your SWPPP and the selection, design, installation, and implementation of your stormwater control measures to ensure the effectiveness of your existing measures and determine if modifications are necessary to meet the benchmark threshold for the applicable parameter,[19] and

b. **Implement Additional Measures.** After reviewing your SWPPP/stormwater control measures, you must implement additional measures, considering good engineering practices, that would reasonably be expected to bring your exceedances below the parameter's benchmark threshold; or if you determine nothing further needs to be done with your stormwater control measures, you must document per Part 5.3 and include in your annual report why you expect your existing control measures to bring your exceedances below the parameter's benchmark threshold for the next 12-month period.

5.2.3.2 **AIM Level 1 Deadlines.** If any modifications to or additional control measures are necessary in response to AIM Level 1, you must implement those modifications or control measures within 14 days of receipt of laboratory results, unless doing so within 14 days is infeasible. If doing so within 14 days is infeasible, you must document per Part 5.3 why it is infeasible and implement such modifications within 45 days.

5.2.3.3 **Continue Quarterly Benchmark Monitoring**. After compliance with AIM Level 1 responses and deadlines, you must continue quarterly benchmark monitoring for the next four quarters for the parameter(s) that caused the AIM triggering event at all affected stormwater discharge points, beginning no later than the next full quarter after compliance.

5.2.3.4 **AIM Level 1 Status Update.** While in AIM Level 1 status, you may either:

a. **Return to Baseline Status.** Your AIM Level 1 status will return to baseline status if the AIM Level 1 responses have been met and continued quarterly benchmark monitoring results indicate that an AIM triggering event per Part 5.2.2 has not occurred after four quarters of monitoring (i.e., the benchmark threshold is no longer exceeded for the parameter(s)). You may discontinue benchmark monitoring for that parameter until monitoring resumes in year 4 of permit coverage per Part 4.2.2.3 or if you have fulfilled all benchmark monitoring

---

[18] For pH, an annual average exceedance can only occur if the four-quarter annual average exceeds the benchmark threshold.

[19] Examples may include: review sources of pollution, spill and leak procedures, and/or non-stormwater discharges; conducting a single comprehensive clean-up, making a change in subcontractor, implementing a new control measure, and/or increasing inspections.

requirements per Part 4.2.2.3, then you may discontinue monitoring for that parameter for the remainder of the permit.

b. **Advance to AIM Level 2.** Your AIM Level 1 status advances to AIM Level 2 status if you have completed AIM Level 1 responses and the continued quarterly benchmark monitoring results indicate that an AIM triggering event per Part 5.2.2 has occurred (i.e., the benchmark threshold continues to be exceeded for the same parameter(s)).

5.2.4 AIM Level 2

Your status changes from AIM Level 1 to AIM Level 2 if your continued quarterly benchmark monitoring results indicate that an AIM triggering event per Part 5.2.2 has occurred (i.e., the benchmark threshold continues to be exceeded for the parameter(s)), unless you qualify for an exception under Part 5.2.6.

5.2.4.1 **AIM Level 2 Responses.** If any of the events in Part 5.2.2 occur, you must review your SWPPP and implement additional pollution prevention/good housekeeping SCMs, considering good engineering practices, beyond what you did in your AIM Level 1 responses that would reasonably be expected to bring your exceedances below the parameter's benchmark threshold. Refer to the MSGP sector-specific fact sheets for recommended controls found at [https://www.epa.gov/npdes/stormwater-discharges-industrial-activities-fact-sheets-and-guidance].

5.2.4.2 **AIM Level 2 Deadlines.** You must implement additional pollution prevention/good housekeeping SCMs within 14 days of receipt of laboratory results that indicate an AIM triggering event has occurred and document per Part 5.3 how the measures will achieve benchmark thresholds. If it is feasible for you to implement a measure, but not within 14 days, you may take up to 45 days to implement such measure. You must document per Part 5.3 why it was infeasible to implement such measure in 14 days. EPA may also grant you an extension beyond 45 days, based on an appropriate demonstration by you, the operator.

5.2.4.3 **Continue Quarterly Benchmark Monitoring.** After compliance with AIM Level 2 responses and deadlines, you must continue quarterly benchmark monitoring for the next four quarters for the parameter(s) that caused the AIM triggering event at all affected discharge points, beginning no later than the next full quarter after compliance.

5.2.4.4 **AIM Level 2 Status Update.** While in AIM Level 2 status, you may either:

a. **Return to Baseline Status.** Your AIM Level 2 status will return to baseline status if the AIM Level 2 responses have been met and the continued quarterly benchmark monitoring results indicate that an AIM triggering event per Part 5.2.2 has not occurred after four quarters of monitoring (i.e., the benchmark threshold is no longer exceeded for the parameter(s)). You may discontinue benchmark monitoring for that parameter until monitoring resumes in year 4 of permit coverage per Part 4.2.2.3, or if you have fulfilled all benchmark monitoring requirements per Part 4.2.2.3, then you may discontinue monitoring for that parameter for the remainder of the permit.

b. **Advance to AIM Level 3.** Your AIM Level 2 status advances to AIM Level 3 status if you have completed the AIM Level 2 responses and the continued quarterly benchmark monitoring results indicate that an AIM triggering event per Part 5.2.2

has occurred (i.e., the benchmark threshold continues to be exceeded for the same parameter(s)).

5.2.5 AIM Level 3

Your status changes from AIM Level 2 to AIM Level 3 if your continued quarterly benchmark monitoring results indicate that an AIM triggering event per Part 5.2.2 has occurred (i.e., the benchmark threshold continues to be exceeded for the parameter(s)), unless you qualify for an exception per Part 5.2.6.

5.2.5.1 **AIM Level 3 Responses.** if any of the triggering events in Part 5.2.2 occur, you must install structural source controls (e.g., permanent controls such as permanent cover, berms, and secondary containment), and/or treatment controls (e.g., sand filters, hydrodynamic separators, oil-water separators, retention ponds, and infiltration structures), except as provided in Part 5.2.6 (AIM Exceptions). The controls or treatment technologies or treatment train you install should be appropriate for the pollutants that triggered AIM Level 3 and should be more rigorous than the pollution prevention/good housekeeping-type stormwater control measures implemented under AIM Tier 2 in Part 5.2.4. You must select controls with pollutant removal efficiencies that are sufficient to bring your exceedances below the benchmark threshold. You must install such stormwater control measures for the discharge point(s) in question and for substantially identical discharge points (SIDPs), unless you individually monitor those SIDPs and demonstrate that AIM Level 3 requirements are not triggered at those discharge points.

5.2.5.2 **AIM Level 3 Deadlines**. You must identify the schedule for installing the appropriate structural source and/or treatment stormwater control measures within 14 days and install such measures within 60 days. If is not feasible within 60 days, you may take up to 90 days to install such measures, documenting in your SWPPP per Part 5.3 why it is infeasible to install the measure within 60 days. EPA may also grant you an extension beyond 90 days, based on an appropriate demonstration by you, the operator.

5.2.5.3 **Continue Quarterly Benchmark Monitoring.** After compliance with AIM Level 3 responses and deadlines, you must continue quarterly benchmark monitoring for the next four quarters for the parameter(s) that caused the AIM triggering event at all affected discharge points, beginning no later than the next full quarter after compliance.

5.2.5.4 **AIM Level 3 Status Update.** While in AIM Level 3 status, you may either:

a. **Return to Baseline Status.** Your AIM Level 3 status will return to baseline status if the AIM Level 3 response(s) have been met and the continued quarterly benchmark monitoring results indicate that an AIM triggering event per Part 5.2.2 has not occurred after four quarters of monitoring (i.e., the benchmark threshold is no longer exceeded for the parameter(s)). You may discontinue benchmark monitoring for that parameter until monitoring resumes in what would be year 4 of permit coverage per Part 4.2.2.3, or if you have fulfilled all benchmark monitoring requirements per Part 4.2.2.3, then you may discontinue monitoring for that parameter for the remainder of the permit.

b. **Continue in AIM Level 3.** Your AIM Level 3 status will remain at Level 3 if you have completed the AIM Level 3 responses and the continued quarterly benchmark monitoring results indicate that an AIM triggering event per Part 5.2.2 has occurred (i.e., the benchmark threshold continues to be exceeded for the same parameter(s)). You must continue quarterly benchmark monitoring for the next four quarters for the parameter(s) that caused the AIM triggering event at all affected discharge points, beginning no later than the next full quarter after compliance. If you continue to exceed the benchmark threshold for the same parameter even after compliance with AIM Level 3, EPA may require you to apply for an individual permit.

5.2.6 AIM Exceptions

Following the occurrence of an AIM triggering event per Part 5.2.2, at any point or tier level of AIM and following four quarters of benchmark monitoring (or sooner if the exceedance is triggered by less than four quarters of data), you may qualify for an exception below from AIM requirements and continued benchmark monitoring. Regardless if you qualify for and claim an exception, you must still review your SCMs, SWPPP, and other on-site activities to determine if actions or modifications are necessary or appropriate in light of your benchmark exceedance(s). If claiming an AIM exception, you must follow the requirements to demonstrate that you qualify for the exception as provided below. If you qualify for an exception, you are not required to comply with the AIM responses or the continuation of quarterly benchmark monitoring for any parameters for which you can demonstrate that the benchmark exceedance is:

5.2.6.1 **Solely Attributable to Natural Background Pollutant Levels:** You must demonstrate that the benchmark exceedance is solely attributable to the presence of that pollutant in natural background sources, provided that all the following conditions are met and you submit your analysis and documentation to the applicable EPA Regional Office upon request:

a. The four-quarter average concentration of your benchmark monitoring results (or fewer than four-quarters of data that trigger an exceedance) is less than or equal to the concentration of that pollutant in the natural background; and

b. You document and maintain with your SWPPP, as required in Part 6.5.9, your supporting rationale for concluding that benchmark exceedances are in fact attributable solely to natural background pollutant levels. You must include in your supporting rationale any data previously collected by you or others (including literature studies) that describe the levels of natural background pollutants in your stormwater discharge. Natural background pollutants are those substances that are naturally occurring in soils or ground water. Natural background pollutants do not include legacy pollutants from earlier activity on your site, or pollutants in run-on from neighboring sources which are not naturally occurring, such as other industrial facilities or roadways.

5.2.6.2 **Due to Run-On:** You must demonstrate and obtain EPA agreement that run-on from a neighboring source (e.g., a source external to your facility) is the cause of the exceedance, provided that all the following conditions are met and you submit your analysis and documentation to the applicable EPA Regional Office for concurrence:

a. After reviewing and revising your SWPPP, as appropriate, you should notify the other facility or entity contributing run-on to your discharges and request that they abate their pollutant contribution.

b. If the other facility or entity fails to take action to address their discharges or sources of pollutants, you should contact your applicable EPA Regional Office.

5.2.6.3 **Due to an abnormal event:** You must immediately document per Part 5.3 that the AIM triggering event was abnormal, a description explaining what caused the abnormal event, and how any measures taken within 14 days of such event will prevent a reoccurrence of the exceedance. You must also collect a sample during the next measurable storm event to demonstrate that the result is less than the benchmark threshold, in which case you do not trigger any AIM requirements based on the abnormal event. You must report the result of this sample in NeT-DMR in lieu of the result from the sample that caused the AIM triggering event. You may avail yourself of the "abnormal" demonstration opportunity at any AIM Level, one time per parameter, and one time per discharge point, which shall include substantially identical discharge points (SIDP), provided you qualify for the exception.

5.2.6.4 **For Aluminum and Copper benchmark parameters only: Demonstrated to not result in an exceedance of your facility-specific value using the national recommended water quality criteria in-lieu of the applicable MSGP benchmark threshold:**

To be eligible for the exception, you must demonstrate to EPA that your stormwater discharge(s) that exceeded the applicable nationally representative MSGP benchmark threshold would not result in an exceedance of a derived facility-specific value. The demonstration to EPA, which will be made publicly available, must meet the minimum elements below in order to be considered for and approved by the applicable EPA Regional Office. If you exceed the MSGP benchmark threshold for aluminum or copper, you must still comply with any applicable AIM requirements and additional benchmark monitoring until the demonstration is made to and approved by the applicable EPA Regional Office. In this case, EPA suggests that samples collected for any continued benchmark monitoring also be analyzed for the required input parameters for each model for efficiency. If you are an existing operator and you anticipate an exceedance of the MSGP benchmark(s) based on previous monitoring data and expect to utilize this exception(s), EPA recommends you begin the required data collection in your first year of permit coverage.

a. **Aluminum:**

i. Conditions for this exception are:

1) Use of EPA’s 2018 National Recommended Aluminum Aquatic Life Criteria: https://www.epa.gov/wqc/aquatic-life-criteria-aluminum;

2) In-stream waterbody sampling for the three water quality input parameters for the recommended criteria model: pH, total hardness, and dissolved organic carbon (DOC); and

3) Completion of sampling events sufficient to capture spatial and temporal variability. Sampling events must adequately represent each applicable season at the facility’s location, which would likely be over the course of at least one year. An equal number of ambient waterbody samples must be collected at a single upstream and downstream location from the operator’s discharge point(s) to the receiving water of the United States. Where there exists no ambient source water upstream of the operator’s discharge point(s) to the receiving water of the United States, samples of the ambient downstream waterbody conditions are sufficient.

ii. The demonstration provided to EPA must include, at minimum:

1) A description of the sampling, analysis, and quality assurance procedures that were followed for data collection, following the guidance in Section

3 of EPA's Industrial Stormwater Monitoring and Sampling Guide. https://www.epa.gov/sites/production/files/2015-11/documents/msgp_monitoring_guide.pdf;

2) The input parameters and export of results from the Aluminum Criteria Calculator, available at: https://www.epa.gov/sites/production/files/2018-12/aluminum-criteria-calculator-v20.xlsm; and,

3) A narrative summary of results.

b. **Copper (only for discharges to freshwater):**

i. Conditions for this exception are:

1) Use of EPA's 2007 National Recommended Freshwater Copper Aquatic Life Criteria: https://www.epa.gov/wqc/aquatic-life-criteria-copper;

2) In-stream waterbody sampling for the 10 water quality input parameters to the BLM for copper: pH; dissolved organic carbon (DOC); alkalinity; temperature; major cations (calcium, magnesium, sodium, and potassium); and major anions (sulfate, chloride);

3) The water quality input parameters, with the exception of temperature, must fall within the range of conditions recommended for use in the BLM, found in Table 1-1 of the Data Requirements document: https://www.epa.gov/sites/production/files/2015-11/documents/copper-data-requirements-training.pdf; and

4) Completion of sampling events sufficient to capture spatial and temporal variability. Because some of the BLM input parameters are known to vary seasonally, EPA suggests a possible starting point of at least one sampling event per season.[20] Sampling events must adequately represent each applicable season at the facility's location, which would likely be over the course of at least one year. An equal number of ambient waterbody samples must be collected at a single upstream and downstream location from the operator's discharge point(s) to the receiving water of the United States. Where there exists no ambient source water upstream of the operator's discharge point(s) to the receiving water of the United States, samples of the ambient downstream waterbody conditions are sufficient.

ii. The demonstration provided to EPA must include, at minimum:

1) A description of the sampling, analysis, and quality assurance procedures that were followed for data collection, following the guidance in Section 3 of EPA's Industrial Stormwater Monitoring and Sampling Guide.

---

[20] EPA training materials on Copper BLM for Data Requirements states that spatial variability in the BLM input parameters caused by physical factors such as watershed size or the presence or absence of a point source discharge(s) to a waterbody should also be considered when determining how many sampling events should be collected when using the BLM to develop site-specific copper criteria. Spatial variability in the BLM input parameters should also be considered when determining how many sampling locations should be selected for development of site-specific copper criteria using the BLM. Regardless of the number of sampling events involved, data collection should reflect site-specific characteristics and consider special circumstances that may affect copper toxicity throughout the expected range of receiving water conditions. See https://www.epa.gov/sites/production/files/2015-11/documents/copper-data-requirements-training.pdf.

https://www.epa.gov/sites/production/files/2015-11/documents/msgp_monitoring_guide.pdf;

2) A discussion of how the data collected reflects the site-specific characteristics and how the operator considered special circumstances that may affect copper toxicity throughout the expected range of receiving water conditions;

3) The input file and export of the results from the BLM software, which can be requested at: https://www.epa.gov/wqs-tech/copper-biotic-ligand-model; and

4) A narrative summary of results.

5.2.6.5 **Demonstrated to not result in any exceedance of water quality standards:** You must demonstrate to EPA within 30 days of the AIM triggering event that the triggering event does not result in any exceedance of water quality standards. If it is not feasible to complete this demonstration within 30 days, you may take up to 90 days, documenting in your SWPPP why it is infeasible to complete the demonstration within 30 days. EPA may also grant you an extension beyond 90 days, based on an appropriate demonstration by you, the operator. The demonstration to EPA, which will be made publicly available, must include the following minimum elements in order to be considered for approval by the EPA Regional Office:

a. the water quality standards applicable to the receiving water;

b. the average flow rate of the stormwater discharge;

c. the average instream flow rates of the receiving water immediately upstream and downstream of the discharge point;

d. the ambient concentration of the parameter(s) of concern in the receiving water immediately upstream and downstream of the discharge point demonstrated by full-storm composite sampling;

e. the concentration of the parameter(s) of concern in the stormwater discharge demonstrated by full-storm, flow-weighted composite sampling;

f. any relevant dilution factors applicable to the discharge; and

g. the hardness of the receiving water.

Timeframe of EPA Review of Your Submitted Demonstration: EPA will review and either approve or disapprove of such demonstration within 90 days of receipt (EPA may take up to 180 days upon notice to you before the 90th day that EPA needs additional time).

- **EPA Approval of Your Submitted Demonstration**. If EPA approves such demonstration within this timeframe, you have met the requirements for this exception, and you do not have to comply with the corresponding AIM requirements and continued benchmark monitoring.
- **EPA Disapproval of Your Submitted Demonstration.** If EPA disapproves such demonstration within this timeframe, you must comply with the corresponding AIM requirements and continued benchmark monitoring, as required. Compliance with the AIM requirements would begin from the date EPA notifies you of the disapproval unless you submit a Notice of Dispute to the applicable EPA Regional Office in Part 7 within 30 days of EPA's disapproval.

- **EPA Does Not Provide Response Related to Your Submitted Demonstration**. If EPA does not provide a response on the demonstration within this timeframe, you may submit to the EPA Regional Office in Part 7 a Notice of Dispute.
- **Operator Submittal of Notice of Dispute.** You may submit all relevant materials, including support for your demonstration and all notices and responses to the Water Division Director for the applicable EPA Region to review within 30 days of EPA's disapproval or after 90 days (or 180 days if EPA has provided notice that it needs more time) of not receiving a response from EPA.
- **EPA Review of Notice of Dispute.** EPA will send you a response within 30 days of receipt of the Notice of Dispute. Time for action by you, the operator, upon disapproval shall be tolled during the period from filing of the Notice of Dispute until the decision on the Notice of Dispute is issued by the Water Division Director for the applicable EPA Region.

5.3 Corrective Action and AIM Documentation

5.3.1 **Documentation within 24 Hours.** You must document the existence of any of the conditions listed in Parts 5.1.1, 5.2.3, 5.2.4, or 5.2.5 within 24 hours of becoming aware of such condition. You are not required to submit this documentation to EPA, unless specifically required or requested to do so. However, you must summarize your findings in the annual report per Part 7.4. Include the following information in your documentation:

5.3.2 Description of the condition or event triggering the need for corrective action review and/or AIM response. For any spills or leaks, include the following information: a description of the incident including material, date/time, amount, location, and reason for spill, and any leaks, spills or other releases that resulted in discharges of pollutants to waters of United States, through stormwater or otherwise;

5.3.2.1 Date the condition/triggering event was identified;

5.3.2.2 Description of immediate actions taken pursuant to Part 5.1.3.1 to minimize or prevent the discharge of pollutants. For any spills or leaks, include response actions, the date/time clean-up completed, notifications made, and staff involved. Also include any measures taken to prevent the reoccurrence of such releases (see Part 2.1.2.4); and

5.3.2.3 A statement, signed and certified in accordance with Appendix B, Subsection 11.

5.3.3 **Documentation within 14 Days.** You must also document the corrective actions and/or AIM responses you took or will take as a result of the conditions listed in Part 5.1.1, 5.2.3, 5.2.4, and/or 5.2.5 within 14 days from the time of discovery of any of those conditions/triggering events. Provide the dates when you initiated and completed (or expect to complete) each corrective action and/or AIM response. If infeasible to complete the necessary corrective actions and/or AIM responses within the specified timeframe, per Parts 5.1.1, 5.2.3, 5.2.4, or 5.2.5, you must document your rationale and schedule for installing the controls and making them operational as soon as practicable after the specified timeframe. If you notified EPA regarding an allowed extension of the specified timeframe, you must document your rationale for an extension. Include any additional information and/or rationale that is required and/or applicable to the specified corrective action and/or AIM response in Part 5. You are not required to submit this documentation to EPA, unless specifically required or requested to do so. However, you must summarize your corrective actions and/or AIM responses in the Annual Report per Part 7.4.

6. Stormwater Pollution Prevention Plan (SWPPP)

You must prepare a SWPPP for your facility before submitting your NOI for permit coverage. If you prepared a SWPPP for coverage under a previous version of this permit, you must review and update the SWPPP to implement all provisions of this permit prior to submitting your NOI. The SWPPP does not contain effluent limitations; such limitations are contained in Parts 2, 8, and 9 of the permit. The SWPPP is intended to document the selection, design, and installation of stormwater control measures to meet the permit's effluent limits. The SWPPP is a living document. Facilities must keep their SWPPP up-to-date throughout their permit coverage, such as making revisions and improvements to their stormwater management program based on new information and experiences with major storm events. As distinct from the SWPPP, the additional documentation requirements (see Part 6.5) are so that you document the implementation (including inspection, maintenance, monitoring, and corrective action) of the permit requirements.

Note: Any discharges not expressly authorized in this permit cannot become authorized or shielded from liability under CWA section 402(k) by disclosure to EPA, state, or local authorities after issuance of this permit via any means, including the Notice of Intent (NOI) to be covered by the permit, the SWPPP, during an inspection, etc.

6.1 Person(s) Responsible for Preparing the SWPPP

You shall prepare the SWPPP in accordance with good engineering practices and to industry standards. The SWPPP may be developed by either a person on your staff or a third party you hire, but it must be developed by a "qualified person" and must be certified per the signature requirements in Part 6.2.7. If EPA concludes that the SWPPP is not in compliance with Part 6.2 of this permit, EPA may require the SWPPP to be reviewed, amended as necessary, and certified by a Professional Engineer, or for Sector G, H or J, by a Professional Geologist, with the education and experience necessary to prepare an adequate SWPPP.

Note: A "qualified person," as defined in Appendix A, is a person knowledgeable in the principles and practices of industrial stormwater controls and pollution prevention, and possesses the education and ability to assess conditions at the industrial facility that could impact stormwater quality, and the education and ability to assess the effectiveness of stormwater controls selected and installed to meet the requirements of the permit.

6.2 Required Contents of Your SWPPP

To be covered under this permit, your SWPPP must contain all of the following elements:

- Stormwater pollution prevention team (Part 6.2.1);
- Site description (Part 6.2.2);
- Summary of potential pollutant sources (Part 6.2.3);
- Description of stormwater control measures (Part 6.2.4);
- Schedules and procedures (Part 6.2.5);
- Documentation to support eligibility pertaining to other federal laws (Part 6.2.6); and

- Signature requirements (Part 6.2.7).

Where your SWPPP refers to procedures in other facility documents, such as a Spill Prevention, Control and Countermeasure (SPCC) Plan or an Environmental Management System (EMS), copies of the relevant portions of those documents must be kept with your SWPPP.

6.2.1 **Stormwater Pollution Prevention Team.** You must identify the staff members (by name or title) that comprise the facility's stormwater pollution prevention team as well as their individual responsibilities. Your stormwater pollution prevention team is responsible for overseeing development of the SWPPP, any modifications to it, and for implementing and maintaining control measures and taking corrective actions and/or AIM responses, when required. Each member of the stormwater pollution prevention team must have ready access to either an electronic or paper copy of applicable portions of this permit, the most updated copy of your SWPPP, and other relevant documents or information that must be kept with the SWPPP.

6.2.2 **Site Description.** Your SWPPP must include the following:

6.2.2.1 **Activities at the facility.** Provide a description of the nature of the industrial activities at your facility.

6.2.2.2 **General location map.** Provide a general location map (e.g., U.S. Geological Survey (USGS) quadrangle map) with enough detail to identify the location of your facility and all receiving waters for your stormwater discharges.

6.2.2.3 **Site map.** Provide a map showing:

a. Boundaries of the property and the size of the property in acres;

b. Location and extent of significant structures and impervious surfaces;

c. Directions of stormwater flow (use arrows), including flows with a significant potential to cause soil erosion;

d. Locations of all stormwater control measures;

e. Locations of all receiving waters, including wetlands, in the immediate vicinity of your facility. Indicate which waterbodies are listed as impaired and which are identified by your state, tribe, or EPA as Tier 2, Tier 2.5, or Tier 3 waters;

f. Locations of all stormwater conveyances including ditches, pipes, and swales;

g. Locations of potential pollutant sources identified under Part 6.2.3.2;

h. Locations where significant spills or leaks identified under Part 6.2.3.3 have occurred;

i. Locations of all stormwater monitoring points;

j. Locations of stormwater inlets and discharge points, with a unique identification code for each discharge point (e.g., 001, 002), indicating if you are treating one or more discharge points as "substantially identical" under Parts 3.2.4.5, 6.2.5.3, and 4.1.1, and an approximate outline of the areas draining to each discharge point;

k. If applicable, municipal separate storm sewer systems (MS4s) and where your stormwater discharges to them;

l. Areas of Endangered Species Act-designated critical habitat for endangered or threatened species, if applicable.

m. Locations of the following activities where such activities are exposed to precipitation:

- **ii.** fueling stations;
- **iii.** vehicle and equipment maintenance and/or cleaning areas;
- **iv.** loading/unloading areas;
- **v.** locations used for the treatment, storage, or disposal of wastes;
- **vi.** liquid storage tanks;
- **vii.** processing and storage areas;
- **viii.** immediate access roads and rail lines used or traveled by carriers of raw materials, manufactured products, waste material, or by-products used or created by the facility;
- **ix.** transfer areas for substances in bulk;
- **x.** machinery;
- **xi.** locations and sources of run-on to your site from adjacent property that contains significant quantities of pollutants.

6.2.3 **Summary of Potential Pollutant Sources.** You must describe in the SWPPP areas at your facility where industrial materials or activities are exposed to stormwater or from which authorized non-stormwater discharges originate. Industrial materials or activities include but are not limited to: material handling equipment or activities; industrial machinery; raw materials; industrial production and processes; and intermediate products, by-products, final products, and waste products. Material handling activities include, but are not limited to: the storage, loading and unloading, transportation, disposal, or conveyance of any raw material, intermediate product, final product or waste product. For structures located in areas of industrial activity, you must be aware that the structures themselves are potential sources of pollutants. This could occur, for example, when metals such as aluminum or copper are leached from the structures as a result of acid rain.

For each area identified, the description must include:

6.2.3.1 **Activities in the Area.** A list of the industrial activities exposed to stormwater (e.g., material storage; equipment fueling, maintenance, and cleaning; cutting steel beams).

6.2.3.2 **Pollutants.** A list of the pollutant(s) or pollutant constituents (e.g., crankcase oil, zinc, sulfuric acid, cleaning solvents) associated with each identified activity, which could be exposed to rainfall or snowmelt and could be discharged from your facility. The pollutant list must include all significant materials that have been handled, treated, stored or disposed, and that have been exposed to stormwater in the three years prior to the date you prepare or amend your SWPPP.

6.2.3.3 **Spills and Leaks.** You must document where potential spills and leaks could occur that could contribute pollutants to stormwater discharges, and the corresponding discharge point(s) that would be affected by such spills and leaks. You must document all significant spills and leaks of oil or toxic or hazardous substances that actually occurred at exposed areas, or that drained to a stormwater conveyance, in the three years prior to the date you prepare or amend your SWPPP.

Note: Significant spills and leaks include, but are not limited to, releases of oil or hazardous substances in excess of quantities that are reportable under CWA section 311 (see 40 CFR 110.6 and 40 CFR 117.21) or section 102 of the Comprehensive Environmental Response, Compensation and Liability Act (CERCLA), 42 USC § 9602. This permit does not relieve you of the reporting requirements of 40 CFR 110, 40 CFR 117, and 40 CFR 302 relating to spills or other releases of oils or hazardous substances.

6.2.3.4 **Unauthorized Non-Stormwater Discharges Evaluation.** By the end of the first year of your permit coverage under this permit, you must inspect and document all discharge points at your facility as part of the SWPPP. If it is infeasible to complete the evaluation within the first year of permit coverage, you must document in your SWPPP why this is the case and identify the schedule by which you expect to complete the evaluation. Documentation of your evaluation must include:

a. The date of the evaluation;

b. A description of the evaluation criteria used;

c. A list of the discharge points or onsite drainage points that were directly observed during the evaluation; and

d. If there are any unauthorized non-stormwater discharges (see Part 1.2.2 for the exclusive list of authorized non-stormwater discharges under this permit) you must immediately take action(s), such as implementing control measures, to eliminate those discharges or seek an individual NPDES wastewater permit and document that you obtained the permit (for example, a floor drain was sealed, a sink drain was re-routed to sanitary, or an NPDES permit application was submitted for an unauthorized cooling water discharge).

e. An explanation of everything you did to immediately eliminate the unauthorized discharge per Part 5 Corrective Actions.

6.2.3.5 **Salt Storage.** You must document the location of any storage piles containing salt used for deicing or other commercial or industrial purposes.

6.2.3.6 **Sampling Data.** Existing permitted facilities must summarize all stormwater discharge sampling data collected at the facility during the previous permit term. The summary shall include a narrative description (and may include data tables/figures) that adequately summarizes the collected sampling data to support identification of potential pollution sources at your facility. New dischargers and new sources must provide a summary of any available stormwater data they may have.

6.2.4 **Description of Stormwater Control Measures to Meet Technology-Based and Water Quality-Based Effluent Limits.** You must document the location and type of stormwater control measures you have specifically chosen and/or designed to comply with:

6.2.4.1 Part 2.1.2: Non-numeric technology-based effluent limits;

6.2.4.2 Parts 2.1.3 and 8: Applicable numeric effluent limitations guidelines-based limits;

6.2.4.3 Part 2.2: Water quality-based effluent limits;

6.2.4.4 Part 2.3: Any additional measures that formed the basis of eligibility regarding Endangered Species Act-listed threatened and endangered species or their critical habitat, National Historic Preservation Act historic properties, and/or federal CERCLA Site requirements;

6.2.4.5 Parts 8 and 9: Applicable effluent limits;

6.2.4.6 Regarding your control measures, you must also document, as appropriate:

a. How you addressed the selection and design considerations in Part 2.1.1;

b. How they address the pollutant sources identified in Part 6.2.3.

Effluent limit requirements in Part 2.1.2 that do not involve the site-specific selection of a stormwater control measure or are specific activity requirements (e.g., “cleaning catch basins when the depth of debris reaches two-thirds (2/3) of the sump depth, or in line with manufacturer specifications, whichever is lower, and keeping the debris surface at least six inches below the lowest outlet pipe”) are marked with an asterisk (*). For the requirements marked with an asterisk, you may include extra information, or you may just “copy-and-paste” these effluent limits word-for-word into your SWPPP without providing additional documentation.

6.2.5 Schedules and Procedures

6.2.5.1 **Pertaining to Stormwater Control Measures Used to Comply with the Effluent Limits in Part 2**. You must document the following in your SWPPP:

a. **Good Housekeeping (see Part 2.1.2.2)** – A schedule or the convention used for determining when pickup and disposal of waste materials occurs. Also provide a schedule for routine inspections for leaks and conditions of drums, tanks and containers.

b. **Maintenance (see Part 2.1.2.3)** – Preventative maintenance procedures, including regular inspections, testing, maintenance and repair of all stormwater control measures to avoid situations that may result in leaks, spills, and other releases, and any back-up practices in place should a storm event resulting in a stormwater discharge occur while a control measure is off-line. The SWPPP shall include the schedule or frequency for maintaining all control measures used to comply with the effluent limits in Part 2;

c. **Spill Prevention and Response Procedures (see Part 2.1.2.4**) – Procedures for preventing and responding to spills and leaks, including notification procedures. For preventing spills, include in your SWPPP the stormwater control measures for material handling and storage, and the procedures for preventing spills that can contaminate stormwater. Also specify cleanup equipment, procedures and spill logs, as appropriate, in the event of spills. You may reference the existence of other plans for Spill Prevention, Control and Countermeasure (SPCC) developed for the facility under section 311 of the CWA or BMP programs otherwise required by an NPDES permit for the facility, provided that you keep a copy of that other plan onsite and make it available for review consistent with Part 6.4;

d. **Erosion and Sediment Controls (see Part 2.1.2.5)** – If you use polymers and/or other chemical treatments as part of your erosion and sediment controls, you must identify the polymers and/or chemicals used and the purpose;

e. **Employee Training (see Part 2.1.2.8)** – The elements of your employee training plan shall include all, but not necessarily limited to, the requirements set forth in Part 2.1.2.8, and also the following:

ii. The content of the training;

iii. The frequency/schedule of training for employees who work in areas where industrial materials or activities are exposed to stormwater, or who are responsible for implementing activities necessary to meet the conditions of this permit;

iv. A log of the dates on which specific employees received training.

6.2.5.2 **Pertaining to Inspections and Assessments.** You must document in your SWPPP your procedures for performing, as appropriate, the types of inspections specified by this permit, including:

a. Routine facility inspections (see Part 3.1) and;

b. Quarterly visual assessment of stormwater discharges (see Part 3.2).

For each type of inspection performed, your SWPPP must identify:

a. Person(s) or positions of person(s) responsible for the inspection;

b. Schedules for conducting inspections, including tentative schedule for facilities in climates with irregular stormwater discharges (see Part 3.2.4);

c. Specific items to be covered by the inspection, including schedules for specific discharge points.

If you are invoking the exception for inactive and unstaffed facilities relating to routine facility inspections and quarterly visual assessments, you must include in your SWPPP the information to support this claim as required by Parts 3.1.5 and 3.2.4.

6.2.5.3 **Pertaining to Monitoring**

a. **Procedures for Each Type of Monitoring.** You must document in your SWPPP procedures for conducting the six types of analytical stormwater discharge monitoring specified by this permit, where applicable to your facility, including:

i. Indicator monitoring (Part 4.2.1);

ii. Benchmark monitoring (Part 4.2.2);

iii. Effluent limitations guidelines monitoring (Part 4.2.3);

iv. State- or tribal-specific monitoring (Part 4.2.4);

v. Impaired waters monitoring (Part 4.2.5);

vi. Other monitoring as required by EPA (Part 4.2.6).

b. **Documentation for Each Type of Monitoring.** For each type of stormwater discharge monitoring, you must document in your SWPPP:

i. Locations where samples are collected, including any determination that two or more discharge points are substantially identical;

ii. Parameters for sampling and the frequency of sampling for each parameter;

iii. Schedules for monitoring at your facility, including schedule for alternate monitoring periods for climates with irregular stormwater discharges (see Part 4.1.6);

iv. Any numeric control values (benchmark thresholds, effluent limitations guidelines, TMDL-related requirements, or other requirements) applicable to stormwater discharges from each discharge point;

v. Procedures (e.g., responsible staff, logistics, laboratory to be used) for gathering storm event data, as specified in Part 4.1.

c. **Exception for Inactive and Unstaffed Facilities**. If you are invoking the exception for inactive and unstaffed facilities for indicator monitoring, benchmark monitoring or impaired waters monitoring, you must include in your SWPPP the information to support this claim as required by Part 4.2.2.5 and 4.2.5.2.

d. **Exception for Substantially Identical Discharge Points (SIDP).** You must document the following in your SWPPP if you plan to use the SIDP exception for your quarterly visual assessment requirements in Part 3.2.4 or your indicator, benchmark, or impaired waters monitoring requirements in Parts 4.2.1, 4.2.2, and 4.2.5, respectively (see also Part 4.1.1):

i. Location of each SIDP;

ii. Description of the general industrial activities conducted in the drainage area of each discharge point;

iii. Description of the control measures implemented in the drainage area of each discharge point;

iv. Description of the exposed materials located in the drainage area of each discharge point that are likely to be significant contributors of pollutants via stormwater discharges;

v. An estimate of the runoff coefficient of the drainage areas (low = under 40%; medium = 40 to 65%; high = above 65%);

vi. Why the discharge points are expected to discharge substantially identical effluents.

6.2.6 Documentation to Support Eligibility Pertaining to Other Federal Laws

6.2.6.1 **Documentation Regarding Endangered Species Act-Listed Threatened and Endangered Species and Critical Habitat Protection.** You must keep with your SWPPP the documentation supporting your determination with regard to Part 1.1.4.

6.2.6.2 **Documentation Regarding National Historic Preservation Act Historic Properties.** You must keep with your SWPPP the documentation supporting your determination with regard to Part 1.1.5.

6.2.7 **Signature Requirements.** You must sign and date your SWPPP in accordance with Appendix B, Subsection 11.

6.3 Required SWPPP Modifications

You must modify your SWPPP based on any corrective actions and deadlines required under Part 5. You must sign and date any SWPPP modifications in accordance with Appendix B, Subsection 11.

6.4 SWPPP Availability

You must retain a complete copy of your current SWPPP required by this permit at the facility in any accessible format. A complete SWPPP includes any documents incorporated by reference and all documentation supporting your permit eligibility pursuant to Part 1.1 of this permit, as well as your signed and dated certification page. Regardless of the format, the SWPPP must be immediately available to facility employees, EPA, a state or tribe, the operator of an MS4 into which you discharge, and representatives of the U.S. Fish and Wildlife Service (USFWS) or the National Marine Fisheries Service (NMFS) at the time of an on-site inspection.

Your current SWPPP or certain information from your current SWPPP described below must also be made available to the public (except any confidential business information (CBI) or restricted information [as defined in Appendix A]), but you must clearly identify those portions of the SWPPP that are being withheld from public access; to do so, you must comply with one of the following two options:

6.4.1 Making Your SWPPP Publicly Available

You have three options to comply with the public availability requirements for the SWPPP: attaching your SWPPP to your NOI; providing a URL of your SWPPP in your NOI; or providing SWPPP information in your NOI. To remain current for all three options, you must update your SWPPP (by updating the attachment per Part 6.4.1.1 via a Change NOI, updating your webpage per Part 6.4.1.2, or updating the SWPPP information in the NOI per Part 6.4.1.3 via a Change NOI no later than 45 days after conducting the final routine facility inspection for the year required in Part 3.1. You may switch your preferred option throughout your permit coverage, but you must update your NOI as necessary to indicate your change in option. You are not required to post any CBI or restricted information (as defined in Appendix A) (such information may be redacted), but you must clearly identify those portions of the SWPPP that are being withheld from public access. CBI may not be withheld from those staff cleared for CBI review within EPA, USFWS or NMFS.

6.4.1.1 Attaching Your SWPPP to your NOI: You may attach a copy of your SWPP, and any SWPPP modifications, records, and other reporting elements that must be kept with your SWPPP, to your NOI in NeT-MSGP.

6.4.1.2 Providing a URL of your SWPPP in your NOI: You may provide a URL in your NOI in NeT-MSGP where your SWPPP can be found, and maintain your current SWPPP at this URL. You must post any SWPPP modifications, records, and other reporting elements that must be kept with your SWPPP required for the previous year at the same URL as the main body of the SWPPP.

6.4.1.3 Providing SWPPP Information in your NOI. You may include the following information in your NOI in NeT-MSGP. Irrespective of this requirement, EPA may provide access to portions of your SWPPP to a member of the public upon request (except any CBI or restricted information (as defined in Appendix A)).

a. Onsite industrial activities exposed to stormwater, including potential spill and leak areas (see Parts 6.2.3.1, 6.2.3.3 and 6.2.3.5);

b. Pollutants or pollutant constituents associated with each industrial activity exposed to stormwater that could be discharged in stormwater and/or any authorized non-stormwater discharges listed in Part 1.2.2 (see Part 6.2.3.2);

c. Stormwater control measures you employ to comply with the non-numeric technology-based effluent limits required in Part 2.1.2 and Part 8, and any other measures taken to comply with the requirements in Part 2.2 Water Quality-Based Effluent Limitations (see Part 6.2.4). If you use polymers and/or other chemical treatments as part of your erosion and sediment controls, you must identify the polymers and/or chemicals used and the purpose; and

d. Schedule for good housekeeping and maintenance (see Part 6.2.5.1) and schedule for all inspections required in Part 3 (see Part 6.2.5.2).

6.5 Additional Documentation Requirements

You are required to keep the following inspection, monitoring, and certification records with your SWPPP that together keep your records complete and up-to-date, and demonstrate your full compliance with the conditions of this permit:

6.5.1 A copy of the NOI submitted to EPA along with any correspondence exchanged between you and EPA specific to coverage under this permit;

6.5.2 A copy of the authorization email you receive from the EPA assigning your NPDES ID;

6.5.3 A copy of this permit (either a hard copy or an electronic copy easily available to SWPPP personnel);

6.5.4 Documentation of any maintenance and repairs of stormwater control measures, including the date(s) of regular maintenance, date(s) of discovery of areas in need of repair/replacement, and for repairs, date(s) that the control measure(s) returned to full function, and the justification for any extended maintenance/repair schedules (see Part 2.1.2.3);

6.5.5 All inspection reports, including the Routine Facility Inspection Reports (see Part 3.1.6) and Visual Assessment Documentation (see Part 3.2.3);

6.5.6 Description of any deviations from the schedule for visual assessments and/or monitoring, and the reason for the deviations (e.g., adverse weather or it was impracticable to collect samples within the first 30 minutes of a measurable storm event) (see Parts 3.2.4 and 4.1.5);

6.5.7 Corrective action documentation required per Part 5.1;

6.5.8 Documentation of any benchmark threshold exceedances, which AIM Level triggering event the exceedance caused, and AIM response you employed per Part 5.2, including:

6.5.8.1 The AIM triggering event;

6.5.8.2 The AIM response taken;

6.5.8.3 Any rationale that SWPPP/SCM changes were unnecessary;

6.5.8.4 Any documentation required to meet any AIM exception per Part 5.2.6.

6.5.9 Documentation to support any determination that pollutants of concern are not expected to be present above natural background levels if you discharge directly to impaired waters, and that such pollutants were not detected in your discharge after three years or were solely attributable to natural background sources (see Part 4.2.5.1); and

6.5.10 Documentation to support your claim that your facility has changed its status from active to inactive and unstaffed with respect to the requirements to conduct routine facility inspections (see Part 3.1.5), quarterly visual assessments (see Part 3.2.4.4), benchmark monitoring (see Part 4.2.2.4), and/or impaired waters monitoring (see Part 4.2.5.2).

7. Reporting and Recordkeeping

7.1 Electronic Reporting Requirement

You must submit all NOIs, NOTs, NECs, Annual Reports, Discharge Monitoring Reports (DMRs), and other reporting information as appropriate electronically, unless the EPA Regional Office grants you a waiver based on one of the following conditions:

- If your headquarters is physically located in a geographic area (i.e., zip code or census tract) that is identified as under-served for broadband Internet access in the most recent report from the Federal Communications Commission; or
- If you have limitations regarding available computer access or computer capability.

Waivers are only granted for a one-time use for a single information submittal, e.g., an initial waiver for an NOI does not apply for the entire term of the permit for other forms. If you need to submit information on paper after your first waiver, you must apply for a new waiver. The EPA Regional Office may extend a wavier on a case-by-case basis.

If you wish to obtain a waiver from submitting a report electronically, you must submit a request to the applicable EPA Regional Office, found in Part 7.9. In that request you must document which exemption you meet, provide evidence supporting any claims, and a copy of your completed paper form. A waiver may only be considered granted once you receive written confirmation from EPA or its authorized representative.

7.2 Submitting Information to EPA

7.2.1 **Submitting Forms via NeT-MSGP.** You must submit all required information via EPA's electronic NPDES eReporting tool (NeT), unless the permit states otherwise or unless you have been granted a waiver per Part 7.1. You can both prepare and submit required information in NeT-MSGP using specific forms, also found in the permit's appendices. To access NeT-MSGP, go to https://cdxnodengn.epa.gov/net-msgp/action/login.

Information you must submit to EPA via NeT-MSGP:

- Notice of Intent (NOI) (Part 1.3);
- Change Notice of Intent (NOI) (Part 1.3.4);

- No Exposure Certification (NEC) (Part 1.5);
- Notice of Termination (NOT) (Part 1.4); and
- Annual Report (AR) (Part 7.4).

Note: You must submit Discharge Monitoring Reports (see Part 7.3) electronically using Net-DMR.

If the applicable EPA Regional Office grants you a waiver from electronic reporting, you must use the required forms found in the Appendices.

7.2.2 **Other Information Required to be Submitted.** Information required to be submitted to the applicable EPA Regional Office at the address in Part 7.8:

- New Dischargers and New Sources to Water Quality-Impaired Waters (Part 1.1.6.2);
- Exceedance Report for Numeric Effluent Limitations (Part 7.5); and
- Additional Reporting (Part 7.6)

7.3 Reporting Monitoring Data to EPA

7.3.1 **Submitting Monitoring Data via NeT-DMR.** You must submit all stormwater discharge monitoring data collected pursuant to Part 4 to EPA using Net-DMR, EPA's electronic DMR system (for more information visit: https://www.epa.gov/compliance/npdes-ereporting (unless the applicable EPA Regional Office grants you a waiver from electronic reporting, in which case you may submit a paper DMR form) no later than 30 days after you have received your complete laboratory results for all monitoring discharge points for the reporting period. Your monitoring requirements (i.e., parameters required to be monitored and sample frequency) will be prepopulated on your electronic Discharge Monitoring Report (DMR) form based on the information you reported on your NOI form through the NeT-MSGP. Accordingly, you must certify the following changes to your monitoring frequency to EPA by submitting a Change NOI in NeT-MSGP, unless EPA has completed the development of planned features in the electronic systems to process submitted monitoring results to automatically turn monitoring on/off as applicable, which will trigger changes to your monitoring requirements in Net-DMR:

7.3.1.1 All benchmark monitoring requirements have been fulfilled for the permit term;

7.3.1.2 All impaired waters monitoring requirements have been fulfilled for the permit term;

7.3.1.3 Benchmark monitoring requirements no longer apply because the EPA Regional Office has concurred with your assessment that run-on from a neighboring source is the cause of the exceedance;

7.3.1.4 Benchmark and/or impaired monitoring requirements no longer apply because your facility is inactive and unstaffed;

7.3.1.5 Benchmark and/or impaired monitoring requirements now apply because your facility has changed from inactive and unstaffed to active and staffed;

7.3.1.6 For Sector G2 only: Discharges from waste rock and overburden piles have exceeded benchmark thresholds;

7.3.1.7 A numeric effluent limitation guideline has been exceeded;

7.3.1.8 A numeric effluent limitation guideline exceedance is back in compliance.

7.3.2 **When You Can Discontinue Submission of Monitoring Data.** Once you have completely fulfilled applicable monitoring requirements, you are no longer required to report monitoring results using Net-DMR. If you have only partially fulfilled your benchmark monitoring and/or impaired waters monitoring requirements (e.g., your four quarterly average is below the benchmark for some, but not all, parameters; you did not detect some, but not all, impairment pollutants), you must continue to report your results in Net-DMR for the remaining monitoring requirements. If the EPA Regional Office grants you a waiver per Part 7.1, you must submit paper reporting forms by the same deadline.

7.3.3 **State or Tribal Required Monitoring Data.** See Part 9 for specific reporting requirements applicable to individual states or tribes.

7.3.4 **Submission Deadline for Indicator and Benchmark Monitoring Data.** For both indicator and benchmark monitoring, you are required to submit sampling results to EPA no later than 30 days after receiving your complete laboratory results for all monitored discharge points for each monitoring period that you are required to collect samples, per Part 4.2.1. and Part 4.2.2. If you collect samples during multiple storm events in a single quarter (e.g., due to adverse weather conditions, climates with irregular stormwater discharges, or areas subject to snow), you are required to submit all sampling results for each storm event to EPA within 30 days of receiving all laboratory results for the event. Or, for any of your monitored discharge points that did not have a discharge within the reporting period, using Net-DMR, you must report that no discharges occurred for that discharge point no later than 30 days after the end of the reporting period.

7.4 Annual Report

You must submit an Annual Report to EPA via NeT-MSGP, per Part 7.2, by January 30th for each year of permit coverage containing information generated from the past calendar year. You must include the following information in the Annual Report:

7.4.1 A summary of your past year's routine facility inspection documentation required (Part 3.1.6). In addition, if you are an operator of an airport facility (Sector S) that is subject to the airport effluent limitations guidelines and are complying with the Part 8.S.8.1 effluent limitation through the use of non-urea-containing deicers, provide a statement certifying that you do not use pavement deicers containing urea. (Note: Operators of airport facilities that are complying with Part 8.S.8.1 by meeting the numeric effluent limitation for ammonia do not need to include this statement.)

7.4.2 A summary of your past year's visual assessment documentation (see Part 3.2.3);

7.4.3 A summary of your past year's corrective action and any required AIM documentation (see Part 5.3). If you have not completed required corrective action or AIM responses at the time you submit your annual report, you must describe the status of any outstanding corrective action(s) or AIM responses. Also describe any incidents of noncompliance in the past year or currently ongoing, or if none, provide a statement that you are in compliance with the permit.

Your Annual Report must also include a statement, signed and certified in accordance with Appendix B, Subsection 11.

7.5 Numeric Effluent Limitations Exceedance Report

If follow-up monitoring per Part 4.2.3.3 exceeds a numeric effluent limit, you must submit an Exceedance Report to EPA no later than 30 days after you have received your laboratory results. Send the Exceedance Report to the applicable EPA Regional Office listed in Part 7.8, and report the monitoring data through Net-DMR. Your report must include the following:

7.5.1 NPDES ID;

7.5.2 Facility name, physical address and location;

7.5.3 Name of receiving water;

7.5.4 Monitoring data from this and the preceding monitoring event(s);

7.5.5 An explanation of the situation, including what you have done and intend to do (should your corrective actions not yet be complete) to correct the violation;

7.5.6 An appropriate contact name and phone number.

7.6 Additional Standard Recordkeeping and Reporting Requirements

In addition to the reporting requirements stipulated in Part 7, you are also subject to the standard permit reporting provisions of Appendix B, Subsection 12. You must submit the following reports to the applicable EPA Regional Office listed in Part 7.8, as applicable. If you discharge through an MS4, you must also submit these reports to the MS4 operator (identified pursuant to Part 6.2.2).

7.6.1 24-hour reporting (see Appendix B, Subsection 12.F) – You must report any noncompliance which may endanger health or the environment. Any information must be provided orally within 24 hours from the time you become aware of the circumstances;

7.6.2 5-day follow-up reporting to the 24-hour reporting (see Appendix B, Subsection 12.F) – A written submission must also be provided within five days of the time you become aware of the circumstances;

7.6.3 Reportable quantity spills (see Part 2.1.2.4) – You must provide notification, as required under Part 2.1.2.4, as soon as you have knowledge of a leak, spill, or other release containing a hazardous substance or oil in an amount equal to or in excess of a reportable quantity;

7.6.4 Planned changes (see Appendix B, Subsection 12.A) – You must give notice to EPA promptly, no fewer than 30 days prior to making any planned physical alterations or additions to the permitted facility that qualify the facility as a new source or that could significantly change the nature or significantly increase the quantity of pollutants discharged;

7.6.5 Anticipated noncompliance (see Appendix B, Subsection 12.B) – You must give advance notice to EPA of any planned changes in the permitted facility or activity which you anticipate will result in noncompliance with permit requirements;

7.6.6 Compliance schedules (see Appendix B, Subsection 12.F) – Reports of compliance or noncompliance with, or any progress reports on, interim and final requirements contained in any compliance schedule of this permit must be submitted no later than 14 days following each schedule date;

7.6.7 Other noncompliance (see Appendix B, Subsection 12.G) – You must report all instances of noncompliance not reported in your Annual Report, compliance schedule report, or 24-hour report at the time monitoring reports are submitted; and

7.6.8 Other information (see Appendix B, Subsection 12.H) – You must promptly submit facts or information if you become aware that you failed to submit relevant facts in your NOI, or that you submitted incorrect information in your NOI or in any report.

7.7 Record Retention Requirements

You must retain copies of your SWPPP (including any modifications made during the term of this permit), additional documentation requirements pursuant to Part 6.5 (including documentation related to any corrective actions or AIM responses taken pursuant to Part 5), all reports and certifications required by this permit, monitoring data, and records of all data used to complete the NOI to be covered by this permit, for a period of at least three years from the date that your coverage under this permit expires or is terminated.

7.8 Addresses for Reports

Permit Part	EPA Region	Areas Covered	Address
7.8.1	1	Connecticut Massachusetts New Hampshire Rhode Island Vermont	U.S. EPA Region 1 Water Division Stormwater and Construction Permits Section 5 Post Office Square, Ste. 100 (06-1) Boston, MA 02109-3912
7.8.2	2	New Jersey New York	U.S. EPA Region 2 NPDES Stormwater Program 290 Broadway, 24th Floor New York, NY 10007-1866
		Puerto Rico Virgin Islands	U.S. EPA Region 2 Caribbean Environmental Protection Division NPDES Stormwater Program City View Plaza II – Suite 7000 48 Rd. 165 Km 1.2 Guaynabo, PR 00968-8069
7.8.3	3	Delaware District of Columbia Maryland Pennsylvania Virginia West Virginia	U.S. EPA Region 3 NPDES Permits Section, MC 3WD41 1650 Arch Street Philadelphia, PA 19103
7.8.4	4	Alabama Florida Georgia Kentucky Mississippi North Carolina	U.S. EPA Region 4 Water Division NPDES Stormwater Program Atlanta Federal Center 61 Forsyth Street SW Atlanta, GA 30303-3104

Permit Part	EPA Region	Areas Covered	Address
		South Carolina Tennessee	
7.8.5	5	Illinois Indiana Michigan Minnesota Ohio Wisconsin	U.S. EPA Region 5 NPDES Program Branch 77 W. Jackson Blvd. MC WP16J Chicago, IL 60604-3507
7.8.6	6	Arkansas Louisiana Oklahoma Texas New Mexico (except see Region 9 for Navajo lands, and see Region 8 for Ute Mountain Reservation lands)	U.S. EPA Region 6 Permitting Section (WD-PE) 1201 Elm Street, Suite 500 Dallas, TX 75270
7.8.7	7	Iowa Kansas Missouri Nebraska	U.S. EPA Region 7 NPDES Stormwater Program 11201 Renner Blvd Lenexa, KS 66219
7.8.8	8	Colorado Montana North Dakota South Dakota Wyoming Utah (except see Region 9 for Goshute Reservation and Navajo Reservation lands) The Ute Mountain Reservation in New Mexico The Pine Ridge Reservation in Nebraska	EPA Region 8 Storm Water Program MC: 8P-W-WW 1595 Wynkoop Street Denver, CO 80202-1129

Permit Part	EPA Region	Areas Covered	Address
7.8.9	9	Arizona California Hawaii Nevada Guam American Samoa The Commonwealth of the Northern Mariana Islands The Goshute Reservation in Utah and Nevada The Navajo Reservation in Utah New Mexico, and Arizona The Duck Valley Reservation in Idaho Fort McDermitt Reservation in Oregon	U.S. EPA Region 9 Water Division NPDES Stormwater Program (WTR-2-3) 75 Hawthorne Street San Francisco, CA 94105-3901
7.8.10	10	Alaska Idaho Oregon (except see Region 9 for Fort McDermitt Reservation) Washington	U.S. EPA Region 10 Water Division NPDES Stormwater Program (19-C04) 1200 6th Avenue, Suite 155 Seattle, WA 98101-3188
7.8.11	State and Tribal Addresses		See Part 9 (states and tribes) for the addresses of applicable states or tribes that require submission of information to their agencies.

Part 8 – Sector-Specific Requirements for Industrial Activity

Subpart A – Sector A – Timber Products

You must comply with Part 8 sector-specific requirements associated with your primary industrial activity and any co-located industrial activities, as defined in Appendix A. The sector- specific requirements apply to those areas of your facility where those sector-specific activities occur. These sector-specific requirements are in addition to any requirements specified elsewhere in this permit.

8.A.1 Covered Stormwater Discharges

The requirements in Subpart A apply to stormwater discharges associated with industrial activity from Timber Products facilities as identified by the SIC Codes specified under Sector A in Table D-1 of Appendix D of the permit.

8.A.2 Limitations on Coverage

8.A.2.1 ***Prohibition of Discharges.*** (See also Part 1.1.3) Not covered by this permit: stormwater discharges from areas where there may be contact with the chemical formulations sprayed to provide surface protection. These discharges must be covered by a separate NPDES permit.

8.A.2.2 ***Authorized Non-Stormwater Discharges.*** (See also Part 1.2.2) Also authorized by this permit, provided the non-stormwater component of the discharge is in compliance with the requirements in Part 2.1.2 (Non-Numeric Effluent Limits): discharges from the spray down of lumber and wood product storage yards where no chemical additives are used in the spray-down waters and no chemicals are applied to the wood during storage.

8.A.3 Additional Technology-Based Effluent Limits

8.A.3.1 ***Good Housekeeping.*** (See also Part 2.1.2.2) In areas where storage, loading and unloading, and material handling occur, perform good housekeeping to minimize the discharge of wood debris, leachate generated from decaying wood materials, and the generation of dust.

8.A.4 Additional SWPPP Requirements

8.A.4.1 ***Drainage Area Site Map.*** (See also Part 6.2.2) Document in your SWPPP where any of the following may be exposed to precipitation or stormwater: processing areas, treatment chemical storage areas, treated wood and residue storage areas, wet decking areas, dry decking areas, untreated wood and residue storage areas, and treatment equipment storage areas.

8.A.4.2 ***Inventory of Exposed Materials.*** (See also Part 6.2.3.2) Where such information exists, if your facility has used chlorophenolic, creosote, or chromium-copper-arsenic formulations for wood surface protection or preserving, document in your SWPPP the following: areas where contaminated soils, treatment equipment, and stored materials still remain and the management practices employed to minimize the contact of these materials with stormwater.

8.A.4.3 ***Description of Stormwater Management Controls.*** (See also Part 6.2.4) Document measures implemented to address the following activities and sources: log, lumber, and wood product storage areas; residue storage areas; loading and unloading areas; material handling areas; chemical storage areas; and equipment and vehicle maintenance, storage, and repair areas. If your facility performs wood surface protection and preservation activities, address the specific control measures, including any BMPs, for these activities.

8.A.5 Additional Inspection Requirements. (See also Part 3.1)

If your facility performs wood surface protection and preservation activities, inspect processing areas, transport areas, and treated wood storage areas monthly to assess the usefulness of practices to minimize the deposit of treatment chemicals on unprotected soils and in areas that will come in contact with stormwater discharges.

8.A.6 Indicator Monitoring (See also Part 4.2.1)

Table 8.A-1 identifies indicator monitoring that applies to the specific subsectors of Sector A. This indicator monitoring applies to both your primary industrial activity and any co-located industrial activities.

Table 8.A-1

Subsector (You may be subject to requirements for more than one sector/subsector)	Indicator Monitoring Parameter	Indicator Monitoring Threshold
Applies to all Sector A (Subsectors A1, A2, A3, and A4) facilities with stormwater discharges from paved surfaces that will be initially sealed or re-sealed with coal-tar sealcoat where industrial activities are located during coverage under this permit	Polycyclic Aromatic Hydrocarbons (PAHs)*	Report Only/ No thresholds or baseline values
Applies to all Sector A (Subsectors A1, A2, A3, and A4) facilities that manufacture, use, or store creosote or creosote-treated wood in areas that are exposed to precipitation	Polycyclic Aromatic Hydrocarbons (PAHs)*	Report Only/ No thresholds or baseline values

* Monitoring is required for the 16 individual PAHs identified at Appendix A to 40 CFR Part 423: naphthalene, acenaphthylene, acenaphthene, fluorene, phenanthrene, anthracene, fluoranthene, pyrene, benzo[a]anthracene, chrysene, benzo[b]fluoranthene, benzo[k]fluoranthene, benzo[a]pyrene, benzo[g,h,i]perylene, indeno[1,2,3-c,d]pyrene, and dibenz[a,h]anthracene.

8.A.7 Sector-Specific Benchmarks (See also Part 4.2.2)

Table 8.A-2 identifies benchmarks that apply to the specific subsectors of Sector A. These benchmarks apply to both your primary industrial activity and any co-located industrial activities.

Table 8.A-2

Subsector (You may be subject to requirements for more than one sector/subsector)	Parameter	Benchmark Monitoring Concentration
Subsector A1. General Sawmills and Planing Mills (SIC 2421)	Chemical Oxygen Demand (COD)	120.0 mg/L
	Total Suspended Solids (TSS)	100 mg/L
	Total Recoverable Zinc (freshwater)[1]	Hardness Dependent
	Total Recoverable Zinc (saltwater)[2]	90 µg/L
Subsector A2. Wood Preserving (SIC 2491)	Total Recoverable Arsenic (freshwater)	150 µg/L
	Total Recoverable Arsenic (saltwater)[1]	69 µg/L
	Total Recoverable Copper (freshwater)	5.19 µg/L
	Total Recoverable Copper (saltwater)[2]	4.8 µg/L
Subsector A3. Log Storage and Handling (SIC 2411)	Total Suspended Solids (TSS)	100 mg/L
Subsector A4. Hardwood Dimension and Flooring Mills; Special Products Sawmills, not elsewhere classified; Millwork, Veneer, Plywood, and Structural Wood; Wood Pallets and Skids; Wood Containers, not elsewhere classified; Wood Buildings and Mobile Homes; Reconstituted Wood Products; and Wood Products Facilities not elsewhere classified (SIC 2426, 2429, 2431-2439 (except 2434), 2441, 2448, 2449, 2451, 2452, 2493, and 2499)	Chemical Oxygen Demand (COD)	120.0 mg/L
	Total Suspended Solids (TSS)	100.0 mg/L

---

[1] The freshwater benchmark values of some metals are dependent on water hardness. For these parameters, permittees must determine the hardness of the receiving water (see Appendix J, "Calculating Hardness in Receiving Waters for Hardness Dependent Metals," for methodology), in accordance with Part 4.2.2.1, to identify the applicable 'hardness range' for determining their benchmark value applicable to their facility. Hardness Dependent Benchmarks follow in the table below:

Freshwater Hardness Range	Zinc
0-24.99 mg/L	37
25-49.99 mg/L	52
50-74.99 mg/L	80
75-99.99 mg/L	107
100-124.99 mg/L	132
125-149.99 mg/L	157
150-174.99 mg/L	181
175-199.99 mg/L	204
200-224.99 mg/L	227

225-249.99 mg/L	249
250+ mg/L	260

[2] Saltwater benchmark values apply to stormwater discharges into saline waters where indicated.

8.A.8 Effluent Limitations Based on Effluent Limitations Guidelines. (See also Part4.2.3)

Table 8.A-3 identifies effluent limits that apply to the industrial activities described below.

Compliance with these effluent limits is to be determined based on discharges from these industrial activities independent of commingling with any other waste streams that may be covered under this permit.

Table 8.A-3[1]

Industrial Activity	Paramete	Effluent Limitation
Discharges resulting from spray down or intentional wetting of logs at wet deck storage areas	pH	6.0 - 9.0 s.u
	Debris (woody material such as bark, twigs, branches, heartwood, or sapwood)	No discharge of debris that will not pass through a 2.54-cm (1-in.) diameter round

[1] Monitor annually.

8.A.8.1 ***Credit for Pollutants in Intake Water.*** For discharges that are comprised solely of water drawn from the same body of water into which the discharges flow and that exceed an applicable effluent limitation, you may be eligible for a credit to the extent necessary to meet the limitation. To obtain this credit, you must show that your discharge would meet the limitation in the absence of the pollutant(s) in the intake water by demonstrating that the control measures you use to meet the limitation would, if properly installed and operated, meet the limitations for the pollutant (i.e., the pollutant level in your discharge is in exceedance of the limitation due to the pollutant concentration in the source or intake water). You must consult the appropriate EPA Regional Office for guidance in seeking a pollutant credit under this Part. EPA will notify you whether you are eligible for the credit, and, if so, provide the scope of such credit.

Part 8 – Sector-Specific Requirements for Industrial Activity

Subpart B – Sector B – Paper and Allied Products

You must comply with Part 8 sector-specific requirements associated with your primary industrial activity and any co-located industrial activities, as defined in Appendix A. The sector- specific requirements apply to those areas of your facility where those sector-specific activities occur. These sector-specific requirements are in addition to any requirements specified elsewhere in this permit.

8.B.1 Covered Stormwater Discharges

The requirements in Subpart B apply to stormwater discharges associated with industrial activity from Paper and Allied Products Manufacturing facilities, as identified by the SIC Codes specified under Sector B in Table D-1 of Appendix D of the permit.

8.B.2 Indicator Monitoring (See also Part 4.2.1)

Table 8.B-1 identifies indicator monitoring that applies to the specific subsectors of Sector B. This indicator monitoring applies to both your primary industrial activity and any co-located industrial activities.

Table 8.B-1

Subsector (You may be subject to requirements for more than one sector/subsector)	Indicator Monitoring Parameter	Indicator Monitoring Threshold
Applies to all Sector B (Subsectors B1 and B2) facilities with stormwater discharges from paved surfaces that will be initially sealed or re-sealed with coal-tar sealcoat where industrial activities are located during coverage under this permit	Polycyclic Aromatic Hydrocarbons (PAHs)*	Report Only/ No thresholds or baseline values
Subsector B2. Pulp Mills (SIC Code 2611); Paper Mills (SIC Code 2621); Paperboard Containers and Boxes (SIC Code 2652-2657); Converted Paper and Paperboard Products, Except Containers and Boxes (SIC Code 2671-2679)	Chemical Oxygen Demand (COD)	Report Only/ No thresholds or baseline values
	Total Suspended Solids (TSS)	Report Only/ No thresholds or baseline values
	pH	Report Only/ No thresholds or baseline values

* Monitoring is required for the 16 individual PAHs identified at Appendix A to 40 CFR Part 423: naphthalene, acenaphthylene, acenaphthene, fluorene, phenanthrene, anthracene, fluoranthene, pyrene, benzo[a]anthracene, chrysene, benzo[b]fluoranthene, benzo[k]fluoranthene, benzo[a]pyrene, benzo[g,h,i]perylene, indeno[1,2,3-c,d]pyrene, and dibenz[a,h]anthracene.

8.B.3 Sector-Specific Benchmarks (See also Part 4.2.2)

Table 8.B-2 identifies benchmarks that apply to the specific subsectors of Sector B. These benchmarks apply to both your primary industrial activity and any co-located industrial activities.

Table 8.B-2.		
Subsector (You may be subject to requirements for more than one sector/subsector)	**Parameter**	**Benchmark Monitoring Concentration**
Subsector B1. Paperboard Mills (SIC Code 2631)	Chemical Oxygen Demand (COD)	120 mg/L

Part 8 – Sector-Specific Requirements for Industrial Activity

Subpart C – Sector C – Chemical and Allied Products Manufacturing, and Refining

You must comply with Part 8 sector-specific requirements associated with your primary industrial activity and any co-located industrial activities, as defined in Appendix A. The sector- specific requirements apply to those areas of your facility where those sector-specific activities occur. These sector-specific requirements are in addition to any requirements specified elsewhere in this permit.

8.C.1 Covered Stormwater Discharges

The requirements in Subpart C apply to stormwater discharges associated with industrial activity from Chemical and Allied Products Manufacturing, and Refining facilities, as identified by the SIC Codes specified under Sector C in Table D-1 of Appendix D of the permit.

8.C.2 Limitations on Coverage

8.C.2.1 ***Prohibition of Non-Stormwater Discharges***. (See also Part 1.1.3) The following are not covered by this permit: non-stormwater discharges containing inks, paints, or substances (hazardous, nonhazardous, etc.) resulting from an onsite spill, including materials collected in drip pans; wash water from material handling and processing areas; and wash water from drum, tank or container rinsing and cleaning. (EPA includes this prohibited non-stormwater discharge here solely as a helpful reminder to the operator that the only non-stormwater discharges authorized by this permit are at Part 1.2.2.)

8.C.3 Indicator Monitoring (See also Part 4.2.1)

Table 8.C-1 identifies indicator monitoring that applies to the specific subsectors of Sector C. This indicator monitoring applies to both your primary industrial activity and any co-located industrial activities.

Table 8.C-1

Subsector (You may be subject to requirements for more than one sector/subsector)	Indicator Monitoring Parameter	Indicator Monitoring Threshold
Applies to all Sector C (Subsectors C1, C2, C3, C4, and C5) facilities with stormwater discharges from paved surfaces that will be initially sealed or re-sealed with coal-tar sealcoat where industrial activities are located during coverage under this permit	Polycyclic Aromatic Hydrocarbons (PAHs)*	Report Only/ No thresholds or baseline values

Table 8.C-1		
Subsector (You may be subject to requirements for more than one sector/subsector)	**Indicator Monitoring Parameter**	**Indicator Monitoring Threshold**
Subsector C5. Medicinal Chemicals and Botanical Products; Pharmaceutical Preparations; in vitro and in vivo Diagnostic Substances; and Biological Products, Except Diagnostic Substances (SIC Code 2833-2836); Paints, Varnishes, Lacquers, Enamels, and Allied Products (SIC Code 2851); Industrial Organic Chemicals (SIC Code 2861-2869); Miscellaneous Chemical Products (SIC Code 2891-2899); Inks and Paints, Including China Painting Enamels, India Ink, Drawing Ink, Platinum Paints for Burnt Wood or Leather Work, Paints for China Painting, Artist's Paints and Artist's Watercolors (SIC Code 3952 (limited to list of inks and paints)); Petroleum Refining (SIC Code 2911)	Chemical Oxygen Demand (COD)	Report Only/ No thresholds or baseline values
	Total Suspended Solids (TSS)	Report Only/ No thresholds or baseline values
	pH	Report Only/ No thresholds or baseline values
Subsector C5. Petroleum Refining (SIC Code 2911)	Polycyclic Aromatic Hydrocarbons (PAHs)*	Report Only/ No thresholds or baseline values

* Monitoring is required for the 16 individual PAHs identified at Appendix A to 40 CFR Part 423: naphthalene, acenaphthylene, acenaphthene, fluorene, phenanthrene, anthracene, fluoranthene, pyrene, benzo[a]anthracene, chrysene, benzo[b]fluoranthene, benzo[k]fluoranthene, benzo[a]pyrene, benzo[g,h,i]perylene, indeno[1,2,3-c,d]pyrene, and dibenz[a,h]anthracene.

8.C.4 Sector-Specific Benchmarks (See also Part 4.2.2)

Table 8.C-2 identifies benchmarks that apply to the specific subsectors of Sector C. These benchmarks apply to both your primary industrial activity and any co-located industrial activities.

Table 8.C-2.		
Subsector (You may be subject to requirements for more than one sector/subsector)	**Parameter**	**Benchmark Monitoring Concentration**
Subsector C1. Agricultural Chemicals (SIC 2873-2879)	Nitrate plus Nitrite Nitrogen	0.68 mg/L
	Total Recoverable Lead (freshwater)[2] Total Recoverable Lead (saltwater)[1]	Hardness Dependent 210 µg/L
	Total Recoverable Zinc (freshwater)[2] Total Recoverable Zinc (saltwater)[1]	Hardness Dependent 90 µg/L
	Total Phosphorus	2.0 mg/L

Table 8.C-2.

Subsector (You may be subject to requirements for more than one sector/subsector)	Parameter	Benchmark Monitoring Concentration
Subsector C2. Industrial Inorganic Chemicals (SIC 2812-2819)	Total Recoverable Aluminum	1,100 µg/L
	Nitrate plus Nitrite Nitrogen	0.68 mg/L
Subsector C3. Soaps, Detergents, Cosmetics, and Perfumes (SIC 2841-2844)	Nitrate plus Nitrite Nitrogen	0.68 mg/L
	Total Recoverable Zinc (freshwater)[2] Total Recoverable Zinc (saltwater)[1]	Hardness Dependent 90 µg/L
Subsector C4. Plastics, Synthetics, and Resins (SIC 2821-2824)	Total Recoverable Zinc (freshwater)[2] Total Recoverable Zinc (saltwater)[1]	Hardness Dependent 90 µg/L

[1] Saltwater benchmark values apply to stormwater discharges into saline waters where indicated.

[2] The freshwater benchmark values of some metals are dependent on water hardness. For these parameters, permittees must determine the hardness of the receiving water (see Appendix J, "Calculating Hardness in Receiving Waters for Hardness Dependent Metals," for methodology), in accordance with Part 4.2.2.1, to identify the applicable 'hardness range' for determining their benchmark value applicable to their facility. Hardness Dependent Benchmarks follow in the table below:

Freshwater Hardness Range	Lead (µg/L)	Zinc (µg/L)
0-24.99 mg/L	14	37
25-49.99 mg/L	24	52
50-74.99 mg/L	45	80
75-99.99 mg/L	69	107
100-124.99 mg/L	95	132
125-149.99 mg/L	123	157
150-174.99 mg/L	152	181
175-199.99 mg/L	182	204
200-224.99 mg/L	213	227
225-249.99 mg/L	246	249
250+ mg/L	262	260

8.C.5 Effluent Limitations Based on Effluent Limitations Guidelines (See also Part 4.2.3.1)

Table 8.C-3 identifies effluent limits that apply to the industrial activities described below.

Compliance with these effluent limits is to be determined based on discharges from these industrial activities independent of commingling with any other waste streams that may be covered under this permit.

Table 8.C-3[1]

Industrial Activity	Parameter	Effluent
Runoff from phosphate fertilizer manufacturing facilities that comes into contact with any raw materials, finished product, by-products or waste products (SIC 2874)	Total Phosphorus (as P)	105.0 mg/L, daily maximum
		35 mg/L, 30-day avg.
	Fluoride	75.0 mg/L, daily maximum
		25.0 mg/L, 30-day avg.

[1] Monitor annually.

Part 8 – Sector-Specific Requirements for Industrial Activity

Subpart D – Sector D – Asphalt Paving and Roofing Materials and Lubricant Manufacturing

You must comply with Part 8 sector-specific requirements associated with your primary industrial activity and any co-located industrial activities, as defined in Appendix A. The sector- specific requirements apply to those areas of your facility where those sector-specific activities occur. These sector-specific requirements are in addition to any requirements specified elsewhere in this permit.

8.D.1 Covered Stormwater Discharges

The requirements in Subpart D apply to stormwater discharges associated with industrial activity from Asphalt Paving and Roofing Materials and Lubricant Manufacturing facilities, as identified by the SIC Codes specified under Sector D in Table D-1 of Appendix D of the permit.

8.D.2 Limitations on Coverage

The following stormwater discharges associated with industrial activity are not authorized by this permit (see also Part 1.1.3):

8.D.2.1 ***Stormwater discharges from petroleum refining facilities, including those that manufacture asphalt or asphalt products, that are subject to nationally established effluent limitation guidelines found in 40 CFR Part 419 (Petroleum Refining).***

The following stormwater discharges associated with industrial activity are not authorized under Sector D:

8.D.2.2 ***Stormwater discharges from oil recycling facilities, which are covered under Sector N*** (see Part 8.N); and

8.D.2.3 ***Stormwater discharges associated with fats and oils rendering, which are covered under Sector U*** (see Part 8.U).

8.D.3 Indicator Monitoring (See also Part 4.2.1)

Table 8.D-1 identifies indicator monitoring that applies to the specific subsectors of Sector D. This indicator monitoring applies to both your primary industrial activity and any co-located industrial activities.

Table 8.D-1

Subsector (You may be subject to requirements for more than one sector/subsector)	Indicator Monitoring Parameter	Indicator Monitoring Threshold
Applies to all Sector D (Subsectors D1 and D2) facilities with stormwater discharges from paved surfaces that will be initially sealed or re-sealed with coal-tar sealcoat where industrial activities are located during coverage under this permit	Polycyclic Aromatic Hydrocarbons (PAHs)*	Report Only/ No thresholds or baseline values
Subsector D1. Asphalt Paving and Roofing Materials (SIC Code 2951, 2952)	Polycyclic Aromatic Hydrocarbons (PAHs)*	Report Only/ No thresholds or baseline values

Table 8.D-1		
Subsector (You may be subject to requirements for more than one sector/subsector)	**Indicator Monitoring Parameter**	**Indicator Monitoring Threshold**
Subsector D2. Miscellaneous Products of Petroleum and Coal (SIC Code 2992, 2999)	Chemical Oxygen Demand (COD)	Report Only/ No thresholds or baseline values
	Total Suspended Solids (TSS)	Report Only/ No thresholds or baseline values
	pH	Report Only/ No thresholds or baseline values
	Polycyclic Aromatic Hydrocarbons (PAHs)*	Report Only/ No thresholds or baseline values

* Monitoring is required for the 16 individual PAHs identified at Appendix A to 40 CFR Part 423: naphthalene, acenaphthylene, acenaphthene, fluorene, phenanthrene, anthracene, fluoranthene, pyrene, benzo[a]anthracene, chrysene, benzo[b]fluoranthene, benzo[k]fluoranthene, benzo[a]pyrene, benzo[g,h,i]perylene, indeno[1,2,3-c,d]pyrene, and dibenz[a,h]anthracene.

8.D.4 Sector-Specific Benchmarks (See also Part 4.2.2)

Table 8.D-2 identifies benchmarks that apply to the specific subsectors of Sector D. These benchmarks apply to both your primary industrial activity and any co-located industrial activities.

Table 8.D-2.		
Subsector	**Parameter**	**Benchmark Monitoring Concentration**
Subsector D1. Asphalt Paving and Roofing Materials (SIC 2951, 2952)	Total Suspended Solids (TSS)	100 mg/L

8.D.5 Effluent Limitations Based on Effluent Limitations Guidelines (See also Part 4.2.3.1)

Table 8.D-3 identifies effluent limitations that apply to the industrial activities described below. Compliance with these effluent limitations is to be determined based on discharges from these industrial activities independent of commingling with any other waste streams that may be covered under this permit.

Table 8.D-3[1]		
Industrial Activity	**Parameter**	**Effluent Limitation**
Discharges from asphalt emulsion facilities.	Total Suspended Solids (TSS)	23.0 mg/L, daily maximum 15.0 mg/L, 30-day avg.
	pH	6.0 - 9.0 s.u.
	Oil and Grease	15.0 mg/L, daily maximum
		10 mg/L, 30-day avg.

[1] Monitor annually.

Part 8 – Sector-Specific Requirements for Industrial Activity

Subpart E – Sector E – Glass, Clay, Cement, Concrete, and Gypsum Products

You must comply with Part 8 sector-specific requirements associated with your primary industrial activity and any co-located industrial activities, as defined in Appendix A. The sector- specific requirements apply to those areas of your facility where those sector-specific activities occur. These sector-specific requirements are in addition to any requirements specified elsewhere in this permit.

8.E.1 Covered Stormwater Discharges

The requirements in Subpart E apply to stormwater discharges associated with industrial activity from Glass, Clay, Cement, Concrete, and Gypsum Products facilities, as identified by the SIC Codes specified under Sector E in Table D-1 of Appendix D of the permit.

8.E.2 Additional Technology-Based Effluent Limits

8.E.2.1 ***Good Housekeeping Measures.*** (See also Part 2.1.2.2) As part of your good housekeeping program, prevent or minimize the discharge of spilled cement, aggregate (including sand or gravel), kiln dust, fly ash, settled dust, or other significant material in stormwater from paved portions of the site that are exposed to stormwater. Sweep or vacuum paved surfaces of the site that are exposed to stormwater at regular intervals or use other equivalent measures (e.g., wash down the area and collect and/or treat and properly dispose of the washdown water) to minimize the potential discharge of these materials in stormwater. Indicate in your SWPPP the frequency of sweeping, vacuuming or other equivalent measures. Determine the frequency based on the amount of industrial activity occurring in the area and the frequency of precipitation, but it must be performed at least once a week in areas where cement, aggregate, kiln dust, fly ash or settled dust are being handled or processed and may be discharged in stormwater. You must also prevent the exposure of fine granular solids (e.g., cement, fly ash, kiln dust) to stormwater, where practicable, by storing these materials in enclosed silos, hoppers, buildings or under other covering.

8.E.3 Additional SWPPP Requirements

8.E.3.1 ***Drainage Area Site Map.*** (See also Part 6.2.2) Document in the SWPPP the locations of the following, as applicable: bag house or other dust control device; recycle/ sedimentation pond, clarifier, or other device used for the treatment of process wastewater; and the areas that drain to the treatment device.

8.E.3.2 ***Discharge Testing.*** (See also Part 6.2.3.4) For facilities producing ready-mix concrete, concrete block, brick, or similar products, include in the non-stormwater discharge testing a description of measures that ensure that process wastewaters resulting from washing trucks, mixers, transport buckets, forms, or other equipment are discharged in accordance with NPDES wastewater permit requirements or are recycled.

8.E.4 Indicator Monitoring. (See also Part 4.2.1)

Table 8.E-1 identifies indicator monitoring that applies to the specific subsectors of Sector E. This indicator monitoring applies to both your primary industrial activity and any co-located industrial activities.

Table 8.E-1		
Subsector (You may be subject to requirements for more than one sector/subsector)	**Indicator Monitoring Parameter**	**Indicator Monitoring Threshold**
Applies to all Sector E (Subsectors E1, E2, and E3) facilities with stormwater discharges from paved surfaces that will be initially sealed or re-sealed with coal-tar sealcoat where industrial activities are located during your coverage under this permit	Polycyclic Aromatic Hydrocarbons (PAHs)*	Report Only/ No thresholds or baseline values
Subsector E3. Flat Glass (SIC Code 3211); Glass and Glassware, Pressed or Blown (SIC Code 3221, 3229); Glass Products Made of Purchased Glass (SIC Code 3231); Hydraulic Cement (SIC Code 3241); Cut Stone and Stone Products (SIC Code 3281); Abrasive, Asbestos, and Miscellaneous Nonmetallic Mineral Products (SIC Code 3291-3299)	Chemical Oxygen Demand (COD)	Report Only/ No thresholds or baseline values
	Total Suspended Solids (TSS)	Report Only/ No thresholds or baseline values
	pH	Report Only/ No thresholds or baseline values

* Monitoring is required for the 16 individual PAHs identified at Appendix A to 40 CFR Part 423: naphthalene, acenaphthylene, acenaphthene, fluorene, phenanthrene, anthracene, fluoranthene, pyrene, benzo[a]anthracene, chrysene, benzo[b]fluoranthene, benzo[k]fluoranthene, benzo[a]pyrene, benzo[g,h,i]perylene, indeno[1,2,3-c,d]pyrene, and dibenz[a,h]anthracene.

8.E.5 Sector-Specific Benchmarks (See also Part 4.2.2)

Table 8.E-2 identifies benchmarks that apply to the specific subsectors of Sector E. These benchmarks apply to both your primary industrial activity and any co-located industrial activities.

Table 8.E-2.		
Subsector (You may be subject to requirements for more than one sector/subsector)	**Parameter**	**Benchmark Monitoring Concentration**
Subsector E1. Clay Product Manufacturers (SIC 3251-3259, 3261-3269)	Total Recoverable Aluminum	1,100 µg/L
Subsector E2. Concrete and Gypsum Product Manufacturers (SIC 3271-3275)	Total Suspended Solids (TSS)	100 mg/L

8.E.6 Effluent Limitations Based on Effluent Limitations Guidelines (See also Part 4.2.3.1)

Table 8.E-3 identifies effluent limits that apply to the industrial activities described below.

Compliance with these limits is to be determined based on discharges from these industrial activities independent of commingling with any other waste streams that may be covered under this permit.

Table 8.E-3[1]		
Industrial Activity	**Parameter**	**Effluent Limitation**
Discharges from material storage piles at cement manufacturing facilities (SIC 3241)	Total Suspended Solids (TSS)	50 mg/L, daily maximum[2]
	pH	6.0 - 9.0 s.u.[2]

[1] Monitor annually.

[2] Any untreated overflow from facilities designed, constructed and operated to treat the volume of stormwater from materials storage piles which is associated with a 10-year, 24-hour rainfall event shall not be subject to the pH and TSS limitations (40 CFR 411.32(b)).

Part 8 – Sector-Specific Requirements for Industrial Activity

Subpart F – Sector F – Primary Metals

You must comply with Part 8 sector-specific requirements associated with your primary industrial activity and any co-located industrial activities, as defined in Appendix A. The sector- specific requirements apply to those areas of your facility where those sector-specific activities occur. These sector-specific requirements are in addition to any requirements specified elsewhere in this permit.

8.F.1 Covered Stormwater Discharges

The requirements in Subpart F apply to stormwater discharges associated with industrial activity from Primary Metals facilities, as identified by the SIC Codes specified under Sector F in Table D-1 of Appendix D of the permit.

8.F.2 Additional Technology-Based Effluent Limits

8.F.2.1 ***Good Housekeeping Measures.*** (See also Part 2.1.2.2) As part of your good housekeeping program, you must implement a cleaning and maintenance program for all impervious areas of the facility where particulate matter, dust or debris may accumulate to minimize the discharge of pollutants in stormwater. The cleaning and maintenance program must encompass, as appropriate, areas where material loading and unloading, storage, handling and processing occur.

Stabilize unpaved areas using vegetation or paving where there is vehicle traffic or where material loading and unloading, storage, handling and processing occurs, unless feasible.

For paved areas of the facility where particulate matter, dust or debris may accumulate, to minimize the discharge of pollutants in stormwater, implement control measures such as the following, where determined to be feasible (list not exclusive): sweeping or vacuuming at regular intervals; and washing down the area and collecting and/or treating and properly disposing of the washdown water. For unstabilized areas or for stabilized areas where sweeping, vacuuming, or washing down is not possible, to minimize the discharge of particulate matter, dust, or debris or other pollutants in stormwater, implement stormwater management devices such as the following, where determined to be feasible (list not exclusive): sediment traps, vegetative buffer strips, filter fabric fence, sediment filtering boom, gravel outlet protection, and other equivalent measures that effectively trap or remove sediment.

8.F.3 Additional SWPPP Requirements

8.F.3.1 ***Drainage Area Site Map.*** (See also Part 6.2.2) Identify in the SWPPP where any of the following activities may be exposed to precipitation or stormwater: storage or disposal of wastes such as spent solvents and baths, sand, slag and dross; liquid storage tanks and drums; processing areas including pollution control equipment (e.g., baghouses); and storage areas of raw material such as coal, coke, scrap, sand, fluxes, refractories or metal in any form. In addition, indicate where an accumulation of significant amounts of particulate matter could occur from such sources as furnace or oven emissions, losses from coal and coke handling operations, etc., and could result in a discharge of pollutants in stormwater.

8.F.3.2 ***Inventory of Exposed Material.*** (See also Part 6.2.3) Include in the inventory of materials handled at the site that potentially may be exposed to precipitation or stormwater: areas where there is the potential for deposition of particulate matter from process air emissions or losses during material-handling activities.

8.F.4 Additional Inspection Requirements (See also Part 3.1)

As part of conducting your routine facility inspections at least quarterly (Part 3.1), address all potential sources of pollutants, including (if applicable) air pollution control equipment (e.g., baghouses, electrostatic precipitators, scrubbers, cyclones), for any signs of degradation (e.g., leaks, corrosion, improper operation) that could limit their efficiency and lead to excessive emissions. Consider monitoring air flow at inlets and outlets (or use equivalent measures) to check for leaks (e.g., particulate deposition) or blockage in ducts. Also inspect all process and material handling equipment (e.g., conveyors, cranes and vehicles) for leaks, drips, or the potential loss of material; and material storage areas (e.g., piles, bins, or hoppers for storing coke, coal, scrap or slag, as well as chemicals stored in tanks and drums) for signs of material losses due to wind or stormwater.

8.F.5 Indicator Monitoring (See also Part 4.2.1)

Table 8.F-1 identifies indicator monitoring that applies to the specific subsectors of Sector F. This indicator monitoring applies to both your primary industrial activity and any co-located industrial activities.

Table 8.F-1

Subsector (You may be subject to requirements for more than one sector/subsector)	Indicator Monitoring Parameter	Indicator Monitoring Threshold
Applies to all Sector F (Subsectors F1, F2, F3, F4, and F5) facilities with stormwater discharges from paved surfaces that will be initially sealed or re-sealed with coal-tar sealcoat where industrial activities are located during coverage under this permit	Polycyclic Aromatic Hydrocarbons (PAHs)*	Report Only/ No thresholds or baseline values
Subsector F1. Steel Works, Blast Furnaces, and Rolling and Finishing Mills (SIC Code 3312-3317)	Polycyclic Aromatic Hydrocarbons (PAHs)*	Report Only/ No thresholds or baseline values
Subsector F2. Iron and Steel Foundries (SIC Code 3321-3325)	Polycyclic Aromatic Hydrocarbons (PAHs)*	Report Only/ No thresholds or baseline values
Subsector F3. Rolling, Drawing, and Extruding of Nonferrous Metals (SIC Code 3351-3357)	Polycyclic Aromatic Hydrocarbons (PAHs)*	Report Only/ No thresholds or baseline values
Subsector F4. Nonferrous Foundries (Castings) (SIC Code 3363-3369)	Polycyclic Aromatic Hydrocarbons (PAHs)*	Report Only/ No thresholds or baseline values

Table 8.F-1

Subsector (You may be subject to requirements for more than one sector/subsector)	Indicator Monitoring Parameter	Indicator Monitoring Threshold
Subsector F5. Primary Smelting and Refining of Nonferrous Metals (SIC Code 3331-3339); Secondary Smelting and Refining of Nonferrous Metals (SIC Code 3341); Miscellaneous Primary Metal Products (SIC Code 3398, 3399)	Chemical Oxygen Demand (COD)	Report Only/ No thresholds or baseline values
	Total Suspended Solids (TSS)	Report Only/ No thresholds or baseline values
	pH	Report Only/ No thresholds or baseline values
	Polycyclic Aromatic Hydrocarbons (PAHs)*	Report Only/ No thresholds or baseline values

* Monitoring is required for the 16 individual PAHs identified at Appendix A to 40 CFR Part 423: naphthalene, acenaphthylene, acenaphthene, fluorene, phenanthrene, anthracene, fluoranthene, pyrene, benzo[a]anthracene, chrysene, benzo[b]fluoranthene, benzo[k]fluoranthene, benzo[a]pyrene, benzo[g,h,i]perylene, indeno[1,2,3-c,d]pyrene, and dibenz[a,h]anthracene.

8.F.6 Sector-Specific Benchmarks (See also Part 4.2.2)

Table 8.F-2 identifies benchmarks that apply to the specific subsectors of Sector F. These benchmarks apply to both your primary industrial activity and any co-located industrial activities.

Table 8.F-2.

Subsector (You may be subject to requirements for more than one sector/subsector)	Parameter	Benchmark Monitoring Concentration
Subsector F1. Steel Works, Blast Furnaces, and Rolling and Finishing Mills (SIC 3312-3317)	Total Recoverable Aluminum	1,100 µg/L
	Total Recoverable Zinc (freshwater)[2] Total Recoverable Zinc (saltwater)[1]	Hardness Dependent 90 µg/L
Subsector F2. Iron and Steel Foundries (SIC 3321-3325)	Total Recoverable Aluminum	1,100 µg/L
	Total Suspended Solids (TSS)	100 mg/L
	Total Recoverable Copper (freshwater) Total Recoverable Copper (saltwater)[1]	5.19 µg/L 4.8 µg/L
	Total Recoverable Zinc (freshwater)[2] Total Recoverable Zinc (saltwater)[1]	Hardness Dependent 90 µg/L

Table 8.F-2.

Subsector (You may be subject to requirements for more than one sector/subsector)	Parameter	Benchmark Monitoring Concentration
Subsector F3. Rolling, Drawing, and Extruding of Nonferrous Metals (SIC 3351-3357)	Total Recoverable Copper (freshwater) Total Recoverable Copper (saltwater)[1]	5.19 µg/L 4.8 µg/L
	Total Recoverable Zinc (freshwater)[2] Total Recoverable Zinc (saltwater)[1]	Hardness Dependent 90 µg/L
Subsector F4. Nonferrous Foundries (SIC 3363-3369)	Total Recoverable Copper (freshwater) Total Recoverable Copper (saltwater)[1]	5.19 µg/L 4.8 µg/L
	Total Recoverable Zinc (freshwater)[2] Total Recoverable Zinc (saltwater)[1]	Hardness Dependent 90 µg/L

[1] Saltwater benchmark values apply to stormwater discharges into saline waters where indicated.

[2] The freshwater benchmark values of some metals are dependent on water hardness. For these parameters, permittees must determine the hardness of the receiving water (see Appendix J, "Calculating Hardness in Receiving Waters for Hardness Dependent Metals," for methodology), in accordance with Part 4.2.2.1, to identify the applicable 'hardness range' for determining their benchmark value applicable to their facility. Hardness Dependent Benchmarks follow in the table below:

Freshwater Hardness Range	**Zinc**
0-24.99 mg/L	37
25-49.99 mg/L	52
50-74.99 mg/L	80
75-99.99 mg/L	107
100-124.99 mg/L	132
125-149.99 mg/L	157
150-174.99 mg/L	181
175-199.99 mg/L	204
200-224.99 mg/L	227
225-249.99 mg/L	249
250+ mg/L	260

Part 8 – Sector-Specific Requirements for Industrial Activity

Subpart G – Sector G – Metal Mining

You must comply with Part 8 sector-specific requirements associated with your primary industrial activity and any co-located industrial activities, as defined in Appendix A. The sector- specific requirements apply to those areas of your facility where those sector-specific activities occur. These sector-specific requirements are in addition to any requirements specified elsewhere in this permit.

Note: Where compliance with a requirement in a separate exploration permit, mining permit, reclamation plan, Surface Mining Control and Reclamation Act (SMCRA) requirements, etc. will result in you fully meeting any requirement in this Subpart, you are considered to have complied with the relevant requirement in this Subpart. You must include documentation in your SWPPP describing your rationale for concluding that any particular action on your part is sufficient to comply with the corresponding requirement in this Subpart.

8.G.1 Covered Stormwater Discharges

The requirements in Subpart G apply to stormwater discharges associated with industrial activity from Metal Mining facilities, including mines abandoned on Federal lands, as identified by the SIC Codes specified under Sector G in Table D-1 of Appendix D. Coverage is required for metal mining facilities that discharge stormwater contaminated by contact with, or that has come into contact with, any overburden, raw material, intermediate product, finished product, byproduct, or waste product located on the site of the operation.

8.G.1.1 ***Covered Discharges from Inactive Facilities.*** All stormwater discharges.

8.G.1.2 ***Covered Discharges from Active and Temporarily Inactive Facilities.*** Only the stormwater discharges from the following areas are covered:

- Waste rock and overburden piles if composed entirely of stormwater and not combined with mine drainage;
- Topsoil piles;
- Offsite haul and access roads;
- Onsite haul and access roads constructed of waste rock, overburden or spent ore if composed entirely of stormwater and not combining with mine drainage;
- Onsite haul and access roads not constructed of waste rock, overburden or spent ore except if mine drainage is used for dust control;
- Discharges from tailings dams or dikes when not constructed of waste rock or tailings and no process fluids are present;
- Discharges from tailings dams or dikes when constructed of waste rock or tailings and no process fluids are present, if composed entirely of stormwater and not combining with mine drainage;
- Concentration building if no contact with material piles;
- Mill site if no contact with material piles;
- Office or administrative building and housing if mixed with stormwater from industrial area;
- Chemical storage area;

- Docking facility if no excessive contact with waste product that would otherwise constitute mine drainage;
- Explosive storage;
- Fuel storage;
- Vehicle and equipment maintenance area and building;
- Parking areas (if necessary);
- Power plant;
- Truck wash areas if no excessive contact with waste product that would otherwise constitute mine drainage;
- Unreclaimed, disturbed areas outside of active mining area;
- Reclaimed areas released from reclamation requirements prior to December 17, 1990;
- Partially or inadequately reclaimed areas or areas not released from reclamation requirements.

8.G.1.3 ***Covered Discharges from Earth-Disturbing Activities Conducted Prior to Active Mining Activities.*** All stormwater discharges.

8.G.1.4 ***Covered Discharges from Facilities Undergoing Reclamation.*** All stormwater discharges.

8.G.2 Limitations on Coverage

8.G.2.1 ***Prohibition of Stormwater Discharges.*** Stormwater discharges not authorized by this permit: discharges from active metal mining facilities that are subject to effluent limitation guidelines for the Ore Mining and Dressing Point Source Category (40 CFR Part 440).

Note: Stormwater discharges from these sources are subject to 40 CFR Part 440 if they are mixed with other discharges subject to Part 440. In this case, they are not eligible for coverage under this permit. Discharges from overburden/waste rock and overburden/waste rock-related areas are not subject to 40 CFR Part 440 unless they: drain naturally (or are intentionally diverted) to a point source; and (2) combine with "mine drainage" that is otherwise regulated under the Part 440 regulations. For such sources, coverage under this permit would be available if the discharge composed entirely of stormwater does not combine with other sources of mine drainage that are not subject to 40 CFR Part 440, and meets the other eligibility criteria contained in Part 1.1 of the permit. Operators bear the initial responsibility for determining if they are eligible for coverage under this permit, or must seek coverage under another NPDES permit. EPA recommends that operators contact the relevant NPDES permit issuance authority for assistance to determine the nature and scope of the "active mining area" on a mine-by-mine basis, as well as to determine the appropriate permitting mechanism for authorizing such discharges.

8.G.2.2 ***Prohibition of Non-Stormwater Discharges.*** Not authorized by this permit: adit drainage, and contaminated springs or seeps discharging from waste rock dumps that do not directly result from precipitation events (see also the standard Limitations on Coverage in Part 1.1.3). (EPA includes these prohibited non-stormwater discharges here solely as a helpful reminder to the operator that the only non-stormwater discharges authorized by this permit are at Part 1.2.2)

8.G.3 Definitions

The following definitions are not intended to supersede the definitions of active and inactive mining facilities established by 40 CFR 122.26(b)(14)(iii).

8.G.3.1 ***Mining operations.*** For this permit, mining operations are grouped into two distinct categories, with distinct effluent limits and requirements applicable to each: a) earth-disturbing activities conducted prior to active mining activities); and b) active mining activities, which includes reclamation. "Mining operations" can occur at both inactive mining facilities and temporarily inactive mining facilities.

8.G.3.2 ***Earth-disturbing activities conducted prior to active mining activities.*** Consists of two classes of earth-disturbing (i.e., clearing, grading and excavation) activities:

a. activities performed for purposes of mine site preparation, including: cutting new rights of way (except when related to access road construction); providing access to a mine site for vehicles and equipment (except when related to access road construction); other earth disturbances associated with site preparation activities on any areas where active mining activities have not yet commenced (e.g., for heap leach pads, waste rock facilities, tailings impoundments, wastewater treatment plants); and

b. construction of staging areas to prepare for erecting structures such as to house project personnel and equipment, mill buildings, etc., and construction of access roads. Earth-disturbing activities associated with the construction of staging areas and the construction of access roads conducted prior to active mining are considered to be "construction" and have additional effluent limits in Part 8.G.4.2.

8.G.3.3 ***Active mining activities.*** Activities related to the extraction, removal or recovery, and benefication of metal ore from the earth; removal of overburden and waste rock to expose mineable minerals; and site reclamation and closure activities. All such activities occur within the "active mining area." Reclamation involves activities undertaken, in compliance with applicable mined land reclamation requirements, to return the land to an appropriate post-mining contour and land use in order to meet applicable federal and state reclamation requirements. In addition, once earth-disturbing activities conducted prior to active mining activities have ceased and all related requirements in Part 8.G.4 have been met, and a well-delineated "active mining area" has been established, all activities (including any clearing, grading, and excavation) that occur within the active mining area are "active mining activities."

8.G.3.4 ***Active mining area.*** A place where work or other activity related to the extraction, removal or recovery of metal ore is being conducted, except, with respect to surface mines, any area of land on or in which grading has been completed to return the earth to desired contour and reclamation work has begun.

Note: Earth-disturbing activities described in the definition in Part 8.G.3.2 that occur on areas outside the active mining area (e.g., for expansion of the mine into undeveloped territory) are considered "earth-disturbing conducted prior to active mining activities", and must comply with the requirements in Part 8.G.4.

8.G.3.5 ***Inactive metal mining facility.*** A site or portion of a site where metal mining and/or milling occurred in the past but there are no active mining activities occurring as defined above, and where the inactive portion is not covered by an active mining permit issued by the applicable state or federal agency. An inactive metal mining facility has an identifiable owner / operator. Sites where mining claims are being maintained prior to disturbances associated with the extraction, beneficiation, or processing of mined materials and sites where minimal activities are undertaken for the sole purpose of maintaining a mining claim are not considered either active or inactive mining facilities and do not require an NPDES industrial stormwater permit.

8.G.3.6 ***Temporarily inactive metal mining facility.*** A site or portion of a site where metal mining and/or milling occurred in the past but currently are not being actively undertaken, and the facility is covered by an active mining permit issued by the applicable state or federal agency.

8.G.4 Requirements Applicable to Earth-Disturbing Activities Conducted Prior to Active Mining Activities

Stormwater discharges from earth-disturbing activities conducted prior to active mining activities (defined in Part 8.G.3.2) are covered under this permit. For such earth-disturbing activities, you must comply with all applicable requirements in Parts 1-9 of the MSGP except for the technology-based effluent limits in Part 8.G.5 and Part 2.1.2, the inspection requirements in Part 8.G.7 and Part 3, and the monitoring requirements in Part 8.G.8 and Part 4.

Authorized discharges from areas where earth-disturbing activities have ceased and stabilization as specified in Part 8.G.4.1.9 or 8.G.4.2.11, where appropriate, has been completed (stabilization is not required for areas where active mining activities will occur), are no longer subject to the Part 8.G.4 requirements. At such time, authorized discharges become subject to all other applicable requirements in the MSGP, including the effluent limits in Parts 2.1.2 and 8.G.5, the inspection requirements in Parts 3 and 8.G.7, and the monitoring requirements in Parts 4 and 8.G.8.

8.G.4.1 ***Technology-Based Effluent Limits Applicable to All Earth-Disturbing Activities Conducted Prior to Active Mining Activities.*** The following technology-based effluent limits apply to authorized discharges from all earth-disturbing activities conducted prior to active mining activities defined in Part 8.G.3.2(a) and 8.G.3.2(b). These limits supersede the technology-based limits listed in Part 2.1.2 and Part 8.G.5 of the MSGP.

8.G.4.1.1 ***Erosion and sediment control installation requirements.***

- By the time construction activities commence, install and make operational downgradient sediment controls, unless this timeframe is infeasible. If infeasible you must install and make such controls operational as soon as practicable or as soon as site conditions permit.
- All other stormwater controls described in the SWPPP must be installed and made operational as soon as conditions on each portion of the site allows.

8.G.4.1.2 ***Erosion and sediment control maintenance requirements. You must:***

- Ensure that all erosion and sediment controls remain in effective operating condition.
- Wherever you determine that a stormwater control needs maintenance to continue operating effectively, initiate efforts to fix

the problem immediately after its discovery, and complete such work by the end of the next work day.

- When a stormwater control must be replaced or significantly repaired, complete the work within 7 days, unless infeasible. If 7 days is infeasible, you must complete the installation or repair as soon as practicable.

8.G.4.1.3 **Perimeter controls.** You must:

- Install sediment controls along those perimeter areas of your disturbed area that will receive stormwater, except where site conditions prevent the use of such controls (in which case, maximize their installation to the extent practicable).
- Remove sediment before it accumulates to one-half of the above-ground height of any perimeter control.

8.G.4.1.4 ***Sediment track-out.*** For construction vehicles and equipment exiting the site directly onto paved roads, you must:

- Use appropriate stabilization techniques to minimize sediment track-out from vehicles and equipment prior to exit;
- Use additional controls to remove sediment from vehicle and equipment tires prior to exit, where necessary;
- Remove sediment that is tracked out onto paved roads by end of the work day.

Note: EPA recognizes that some fine grains may remain visible on the surfaces of off-site streets, other paved areas, and sidewalks even after you have implemented sediment removal practices. Such “staining” is not a violation of Part 8.G.4.1.4.

8.G.4.1.5 ***Soil or sediment stockpiles.*** You must:

- Minimize erosion of stockpiles from stormwater and wind via temporary cover, if feasible.
- Prevent up-slope stormwater flows from causing erosion of stockpiles (e.g., by diverting flows around the stockpile).
- Minimize sediment from stormwater that runs off of stockpiles, using sediment controls (e.g., a sediment barrier or downslope sediment control).

8.G.4.1.6 ***Sediment basins.*** If you intend to install a sediment basin to treat stormwater from your earth-disturbing activities, you must:

- Provide storage for either (1) the 2-year, 24-hour storm, or (2) 3,600 cubic feet per acre drained.
- Prevent erosion of (1) basin embankments using stabilization controls (e.g., erosion control blankets), and (2) the inlet and outlet points of the basin using erosion controls and velocity dissipation devices.

8.G.4.1.7 **Minimize dust.** You must minimize the generation of dust through the appropriate application of water or other dust suppression techniques that minimize pollutants being discharged into surface waters.

8.G.4.1.8 ***Restrictions on use of treatment chemicals.*** If you intend to use sediment treatment chemicals at your site, you are subject to the following minimum requirements:

- Use conventional erosion and sediment controls prior to and after application of chemicals;
- Select chemicals suited to soil type, and expected turbidity, pH, flow rate;
- Minimize the discharge risk from stored chemicals;
- Comply with state/local requirements;
- Use chemicals in accordance with good engineering practices and specifications of chemical supplier;
- Ensure proper training;
- Provide proper SWPPP documentation.

If you plan to use cationic treatment chemicals (as defined in Appendix A), you are ineligible for coverage under this permit, unless you notify your applicable EPA Regional Office in advance and the EPA Regional Office authorizes coverage under this permit after you have included appropriate controls and implementation procedures designed to ensure that your use of cationic treatment chemicals will not lead to a violation of water quality standards.

8.G.4.1.9 ***Site stabilization requirements for earth-disturbing activities performed for purposes of mine site preparation as defined in 8.G.3.2(a) (i.e., not applicable to construction of staging areas for structures and access roads as defined in 8.G.3.2(b)).*** You must comply with the following stabilization requirements except where the intended function of the site accounts for such disturbed earth (e.g., the earth disturbances will become actively mined, or the controls implemented at the active mining area effectively control the disturbance) (although you are encouraged to do so within the active mining area, where appropriate):

- *Temporary stabilization of disturbed areas.* Stabilization measures must be initiated immediately in portions of the site where earth-disturbing activities performed for purposes of mine site preparation (as defined in 8.G.3.2(a)) have temporarily ceased, but in no case more than 14 days after such activities have temporarily ceased. In arid, semi-arid, and drought-stricken areas, or in areas subject to snow or freezing conditions, where initiating perennial vegetative stabilization measures is not possible within 14 days after earth-disturbing activities performed for purposes of mine site preparation has temporarily ceased, temporary vegetative stabilization measures must be initiated as soon as practicable. Until temporary vegetative stabilization is achieved, interim measures such as erosion control blankets with an appropriate seed base and tackifiers must be employed. In areas of the site where earth-disturbing activities performed for purposes of mine site preparation have permanently ceased prior to active mining, temporary stabilization measures must be implemented to minimize mobilization of sediment or other pollutants until active mining activities commence.
- *Final stabilization of disturbed areas.* Stabilization measures must be initiated immediately where earth-disturbing activities performed for purposes of mine site preparation (as defined in 8.G.3.2(a)) have permanently ceased, but in no case more than 14 days after the earth- disturbing activities have permanently ceased. In arid, semi-

arid, and drought-stricken areas, or in areas subject to snow or freezing conditions, where initiating perennial vegetative stabilization measures is not possible within 14 days after earth-disturbing activities have permanently ceased, final vegetative stabilization measures must be initiated as soon as possible. Until final stabilization is achieved, temporary stabilization measures, such as erosion control blankets with an appropriate seed base and tackifiers, must be used.

8.G.4.2 ***Additional Technology-Based Effluent Limits Applicable Only to the Construction of Staging Areas for Structures and Access Roads.*** The following technology-based effluent limits apply to authorized discharges from earth-disturbing activities associated with the construction of staging areas and the construction of access roads, as defined in Part 8.G.3.2(b). These limits supersede the technology-based limits listed in Part 2.1.2 and Part 8.G.5 of the MSGP. These limits do not apply to earth-disturbing activities performed for purposes of mine site preparation (as defined in 8.G.3.2(a)).

8.G.4.2.1 **Area of *disturbance*.** You must minimize the amount of soil exposed during construction activities.

8.G.4.2.2 ***Erosion and sediment control design requirements***. You must:

- Design, install and maintain effective erosion and sediment controls to minimize the discharge of pollutants from construction activities. Account for the following factors in designing your erosion and sediment controls:
  - The expected amount, frequency, intensity and duration of precipitation;
  - The nature of stormwater discharges and run-on at the site, including factors such as impervious surfaces, slopes and site drainage features;
  - The range of soil particle sizes expected to be present on the site.
- Direct discharges from your stormwater controls to vegetated areas of your site to increase sediment removal and maximize stormwater infiltration, including any natural buffers, unless infeasible. Use velocity dissipation devices if necessary to prevent erosion when directing stormwater to vegetated areas.
- If any stormwater flow becomes or will be channelized at your site, you must design erosion and sediment controls to control both peak flowrates and total stormwater volume to minimize channel and streambank erosion and scour in the immediate vicinity of discharge points.
- If you install stormwater conveyance channels, they must be designed to avoid unstabilized areas on the site and to reduce erosion, unless infeasible. In addition, you must minimize erosion of channels and their embankments, outlets, adjacent streambanks, slopes, and downstream waters during discharge conditions through the use of erosion controls and velocity dissipation devices within and along the length of any constructed stormwater conveyance channel, and at any outlet to provide a non-erosive flow velocity.

8.G.4.2.3 **Natural Buffers.** For any stormwater discharges from construction activities within 50 feet of a water of the U.S., you must comply with one of the following compliance alternatives:

1. Provide a 50-foot undisturbed natural buffer between construction activities and the water of the U.S.; or
2. Provide an undisturbed natural buffer that is less than 50 feet supplemented by additional erosion and sediment controls, which in combination, achieve a sediment load reduction that is equivalent to a 50-foot undisturbed natural buffer; or
3. If it is infeasible to provide an undisturbed natural buffer of any size, implement erosion and sediment controls that achieve a sediment load reduction that is equivalent to a 50-foot undisturbed natural buffer.

There are exceptions when buffer requirements do not apply:

- There is no stormwater discharge from construction disturbances to a water of the U.S;
- The natural buffer has already been eliminated by preexisting development disturbances;
- The disturbance is for the construction of a water-dependent structure or construction approved under a CWA section 404 permit;
- For linear construction projects, you are not required to comply with the requirements if there are site constraints provided that, to the extent feasible, you limit disturbances within 50 feet of a water of the U.S. and/or you provide supplemental erosion and sediment controls to treat stormwater discharges from any disturbances within 50 feet of a water of the U.S.

See EPA's industrial stormwater website under "Fact Sheets and Guidance" for information on complying with these alternatives: https://www.epa.gov/npdes/stormwater-discharges-industrial-activities.

8.G.4.2.4 **Soil *or sediment stockpiles***. In addition to the requirements in Part 8.G.4.1.5, you must locate any piles outside of any natural buffers established under Part 8.G.4.2.3.

8.G.4.2.5 ***Sediment basins***. In addition to the requirements in Part 8.G.4.1.6, you must locate sediment basins outside of any surface waters and any natural buffers established under Part 8.G.4.2.3, and you must utilize outlet structures that withdraw water from the surface, unless infeasible.

8.G.4.2.6 ***Native topsoil preservation.*** You must preserve native topsoil removed during clearing, grading, or excavation, unless infeasible. Store topsoil in a manner that will maximize its use in reclamation or final vegetative stabilization (e.g., by keeping the topsoil stabilized with seed or similar measures). This requirement does not apply if the intended function of the disturbed area dictates that topsoil be disturbed or removed.

8.G.4.2.7 ***Steep slopes.*** You must minimize the disturbance of steep slopes. The permit does not prevent or prohibit disturbance on steep slopes.

Depending on site conditions and needs, disturbance on steep slopes may be necessary (e.g., a road cut in mountainous terrain; for grading steep slopes prior to erecting the mine office). Where steep slope disturbances are necessary, you can minimize the disturbances to steep slopes through the implementation of a number of standard erosion and sediment control practices, such as by phasing disturbances in these areas and using stabilization practices specifically for steep grades.

8.G.4.2.8 ***Soil compaction.*** Where final vegetative stabilization will occur or where infiltration practices will be installed, you must either restrict vehicle/ equipment use in these areas to avoid soil compaction or use soil conditioning techniques to support vegetative growth. Minimizing soil compaction is not required where compacted soil is integral to the functionality of the site.

8.G.4.2.9 ***Dewatering Practices.*** You are prohibited from discharging ground water or accumulated stormwater that is removed from excavations, trenches, foundations, vaults or other similar points of accumulation, unless such waters are first effectively managed by appropriate controls (e.g., sediment basins or sediment traps, sediment socks, dewatering tanks, tube settlers, weir tanks, or filtration systems). Uncontaminated, non-turbid dewatering water can be discharged without being routed to a control. (An uncontaminated discharge is a discharge that meets applicable water quality standards.)

You must also meet the following requirements for dewatering activities:

- Discharge requirements:
  - No discharging visible floating solids or foam;
  - Remove oil, grease and other pollutants from dewatering water via an oil-water separator or suitable filtration device (such as a cartridge filter);
  - Utilize vegetated upland areas of the site, to the extent feasible, to infiltrate dewatering water before discharge. In no case shall waters of the U.S. be considered part of the treatment area;
  - Implement velocity dissipation devices at all points where dewatering water is discharged;
  - Haul backwash water away for disposal or return it to the beginning of the treatment process; and
  - Clean or replace the filter media used in dewatering devices when the pressure differential equals or exceeds the manufacturer's specifications.
- Treatment chemical restrictions: If you use polymers, flocculants or other chemicals to treat dewatering water, you must comply with the requirements in Parts 8.G.4.1.8.

8.G.4.2.10 ***Pollution prevention requirements.***

- *Prohibited discharges* (this non-exhaustive list of prohibited non-stormwater discharges is included here as a reminder that only the only authorized non-stormwater discharges are those enumerated in Part 1.2.2):
  - Wastewater from washout of concrete;
  - Wastewater from washout and cleanout of stucco, paint, form

    - release oils, curing compounds, and other construction materials;
    - Fuels, oils, or other pollutants used for operation and maintenance of vehicles or equipment;
    - Soaps, solvents, or detergents used in vehicle or equipment washing;
    - Toxic or hazardous substances from a spill or other release.
- *Design and location requirements:* Minimize the discharge of pollutants from pollutant sources by:
    - Minimizing exposure;
    - Using secondary containment, spill kits, or other equivalent measures;
    - Locating pollution sources away from surface waters, storm sewer inlets, and drainageways;
    - Cleaning up spills immediately (do not clean by hosing area down).
- *Pollution prevention requirements for wash waters:* Minimize the discharge of pollutants from equipment and vehicle washing, wheel wash water, and other wash waters. Wash waters must be treated in a sediment basin or alternative control that provides equivalent or better treatment prior to discharge;
- *Pollution prevention requirements for the storage, handling, and disposal of construction products, materials, and wastes:* Minimize the exposure of building materials, building products, construction wastes, trash, landscape materials, fertilizers, pesticides, herbicides, detergents, sanitary waste, and other materials present on the site to stormwater. Minimization of exposure is not required in cases where the exposure to stormwater will not result in a discharge of pollutants, or where exposure of a specific material or product poses little risk of stormwater contamination (such as final products and materials intended for outdoor use).

8.G.4.2.11 ***Site Stabilization requirements for the construction of staging areas for structures and access roads as defined in 8.G.3.2(b)*** (i.e., not applicable to earth-disturbing activities performed for purposes of mine site preparation as defined in 8.G.3.2(a)). You must comply with the following stabilization requirements, except where the intended function of the site accounts for such disturbed earth (e.g., the area of construction will become actively mined, or the controls implemented at the active mining area effectively control the disturbance):

- By no later than the end of the next work day after construction work in an area has stopped permanently or temporarily ("temporarily" means the land will be idle for a period of 14 days or more but earth-disturbing activities will resume in the future), immediately initiate stabilization measures;
- If using vegetative measures, by no later than 14 days after initiating stabilization:
    - Seed or plant the area, and provide temporary cover to protect the planted area;
    - Once established, vegetation must be uniform, perennial (if final stabilization), and cover at least 70% of stabilized area based on

density of native vegetation.

- If using non-vegetative stabilization, by no later than 14 days after initiating stabilization:
  - Install or apply all non-vegetative measures;
  - Cover all areas of exposed soil.

Note: For the purposes of this permit, EPA will consider any of the following types of activities to constitute the initiation of stabilization: 1. Prepping the soil for vegetative or non-vegetative stabilization; 2. Applying mulch or other non-vegetative product to the exposed area; 3. Seeding or planting the exposed area; 4. Starting any of the activities in # 1 – 3 on a portion of the area to be stabilized, but not on the entire area; and 5. Finalizing arrangements to have stabilization product fully installed in compliance with the applicable deadline for completing stabilization.

Exceptions:

- Arid, semi-arid (if construction occurs during seasonally dry period), or drought-stricken areas:
  - Within 14 days of stopping construction work in an area, install any necessary non-vegetative stabilization measures;
  - Initiate vegetative stabilization as soon as conditions on the site allow;
  - Document the schedule that will be followed for initiating and completing vegetative stabilization;
  - Plant the area so that within 3 years the 70% cover requirement is met.
- Sites affected by severe storm events or other unforeseen circumstances:
  - Initiate vegetative stabilization as soon conditions on the site allow;
  - Document the schedule that will be followed for initiating and completing vegetative stabilization;
  - Plant the area so that so that within 3 years the 70% cover requirement is met.

8.G.4.3 *Water Quality-Based Requirements Applicable to Earth-Disturbing Activities Conducted Prior to Active Mining Activities.*

The following water quality-based limits apply to earth-disturbing activities conducted prior to active mining activities defined in Part 8.G.3.2(a) and 8.G.3.2(b), in addition to the water quality-based limits in Part 2.2 of the MSGP.

Stricter requirements apply if your site will discharge to an impaired water or a water that is identified by your state, tribe, or EPA as a Tier 2 or Tier 2.5 for antidegradation purposes:

- More rapid stabilization of exposed areas: Complete initial stabilization activities within 7 days of stopping earth-disturbing work.
- More frequent site inspections: Once every 7 days and within 24 hours of a storm event of 0.25 inches or greater.

8.G.4.4 Inspection Requirements Applicable to Earth-Disturbing Activities Conducted Prior to Active Mining Activities.

The following requirements supersede the inspection requirements in Part 3 and 8.G.7 of the MSGP for earth-disturbing activities conducted prior to active mining activities defined in Part 8.G.3.2(a) and 8.G.3.2(b).

8.G.4.4.1 Inspection frequency

- At least once every 7 calendar days, or
- Once every 14 calendar days and within 24 hours of a storm event of 0.25 inches or greater.

Note:

- Inspections only required during working hours;
- Inspections not required during unsafe conditions; and
- If you choose to inspect once every 14 days, you must have a method for measuring rainfall amount on site (either rain gauge or representative weather station)

Note: To determine if a storm event of 0.25 inches or greater has occurred on your site, you must either keep a properly maintained rain gauge on your site, or obtain the storm event information from a weather station that is representative of your location. For any day of rainfall during normal business hours that measures 0.25 inches or greater, you must record the total rainfall measured for that day.

Note: You are required to specify in your SWPPP which schedule you will be following.

Note: “Within 24 hours of the occurrence of a storm event” means that you are required to conduct an inspection within 24 hours once a storm event has produced 0.25 inches, even if the storm event is still continuing. Thus, if you have elected to inspect bi-weekly and there is a storm event at your site that continues for multiple days, and each day of the storm produces 0.25 inches or more of rain, you are required to conduct an inspection within 24 hours of the first day of the storm and within 24 hours after the end of the storm.

8.G.4.4.2 Reductions in inspection frequency.

- Stabilized areas: You may reduce the frequency of inspections to once per month in any area of your site where stabilization has occurred pursuant to Part 8.G.4.1.9 or 8.G.4.2.11.
- Arid, semi-arid, and drought stricken areas: If earth-disturbing activities are occurring during the seasonally dry period or during a period in which drought is predicted to occur, you may reduce inspections to once per month and within 24 hours of a 0.25 inch storm event.
- Frozen conditions: You may temporarily suspend or reduce inspections to once per month until thawing conditions occur if frozen conditions are continuous and disturbed areas have been stabilized. For extreme conditions in remote areas, e.g., where transit to the site is perilous/restricted or temperatures are routinely below freezing, you may suspend inspections until the conditions are conducive to safe access, and more frequent inspections can resume.

8.G.4.4.3 **Areas to be inspected.** You must at a minimum inspect the all of the following areas:

- Disturbed areas;
- Stormwater controls and pollution prevention measures;
- Locations where stabilization measures have been implemented;
- Material, waste, borrow, or equipment storage and maintenance areas;
- Areas where stormwater flows;
- Points of discharge.

8.G.4.4.4 ***What to check for during inspections.*** At a minimum you must check:

- Whether all stormwater controls are installed, operational and working as intended;
- Whether any new or modified stormwater controls are needed;
- For conditions that could lead to a spill or leak;
- For visual signs of erosion/sedimentation at points of discharge.

If a discharge is occurring, check:

- The quality and characteristics of the discharge;
- Whether controls are operating effectively.

8.G.4.4.5 **Inspection report.** Within 24 hours of an inspection, complete a report that includes:

- Inspection date;
- Name and title of inspector(s);
- Summary of inspection findings;
- Rainfall amount that triggered the inspection (if applicable);
- If it was unsafe to inspect a portion of the site, include documentation of the reason and the location(s);
- Each inspection report must be signed;
- Keep a current copy of all reports at the site or at an easily accessible location.

8.G.5 Technology-Based Effluent Limits for Active Mining Activities

Note: These requirements do not apply for any discharges from earth-disturbing activities conducted prior to active mining as defined in 8.G.3.2(a) or 8.G.3.2(b).

8.G.5.1 ***Employee training***. (See also Part 2.1.2.8) Conduct employee training at least annually at active and temporarily inactive facilities.

8.G.5.2 ***Stormwater controls.*** Apart from the control measures you implement to meet your Part 2 technology-based effluent limits, where necessary to minimize pollutant discharges in stormwater, implement the following control measures at your site. The potential pollutants identified in Part 8.G.6.3 shall determine the priority and appropriateness of the control measures selected. For mines subject to dust control requirements under state or county air quality permits, provided the requirements are equivalent, compliance with such air permit dust requirements shall constitute compliance with the dust control effluent limit in Part 2.1.2.10.

Stormwater diversions: Divert stormwater away from potential pollutant sources through implementation of control measures such as the following, where determined to be feasible (list not exclusive): interceptor or diversion controls (e.g., dikes, swales, curbs, berms); pipe slope drains; subsurface drains; conveyance systems (e.g., channels or gutters, open-top box culverts, and waterbars; rolling dips and road sloping; roadway surface water deflector and culverts); or their equivalents.

Capping: When capping is necessary to minimize pollutant discharges in stormwater, identify the source being capped and the material used to construct the cap.

Treatment: If treatment of stormwater (e.g., chemical or physical systems, oil - water separators, artificial wetlands) is necessary to protect water quality, describe the type and location of treatment used. Passive and/or active treatment of stormwater is encouraged, where feasible. Treated stormwater may be discharged as a stormwater source regulated under this permit provided the discharge is not combined with discharges subject to effluent limitation guidelines for the Ore Mining and Dressing Point Source Category (40 CFR Part 440).

8.G.5.3 ***Discharge testing.*** (See also Part 6.2.3.4) Test or evaluate all discharge points covered under this permit for the presence of specific mining-related but unauthorized non-stormwater discharges such as seeps or adit discharges, or discharges subject to effluent limitations guidelines (e.g., 40 CFR Part 440), such as mine drainage or process water. Alternatively (if applicable), you may keep a certification with your SWPPP consistent with Part 8.G.6.6.

8.G.6 Additional SWPPP Requirements for Mining Operations

Note: The requirements in Part 8.G.6 are not applicable to inactive metal mining facilities.

8.G.6.1 ***Nature of industrial activities***. (See also Part 6.2.2) Briefly document in your SWPPP the mining and associated activities that can potentially affect the stormwater discharges covered by this permit, including a general description of the location of the site relative to major transportation routes and communities.

8.G.6.2 ***Site map***. (See also Part 6.2.2) Document in your SWPPP the locations of the following (as appropriate): mining or milling site boundaries; access and haul roads; outline of the drainage areas of each stormwater discharge points within the facility with indications of the types of discharges from the drainage areas; location(s) of all permitted discharges covered under an individual NPDES permit; outdoor equipment storage, fueling, and maintenance areas; materials handling areas; outdoor manufacturing, outdoor storage, and material disposal areas; outdoor chemicals and explosives storage areas; overburden, materials, soils, or waste storage areas; location of mine drainage (where water leaves mine) or other process water; tailings piles and ponds (including proposed ones); heap leach pads; off-site points of discharge for mine drainage and process water; surface waters; boundary of tributary areas that are subject to effluent limitations guidelines; and location(s) of reclaimed areas.

8.G.6.3 ***Potential pollutant sources.*** (See also Part 6.2.3) For each area of the mine or mill site where stormwater discharges associated with industrial activities occur, identify the types of pollutants (e.g., heavy metals, sediment) likely to be present in significant amounts. Consider these factors: the mineralogy of the ore and waste rock (e.g., acid forming); toxicity and quantity of chemicals used, produced, or discharged; the likelihood of contact with stormwater; vegetation of site (if any); and history of significant leaks or spills of toxic or hazardous pollutants. Also include a summary of any existing ore or waste rock or overburden characterization data and test results for potential generation of acid rock. If any new data is acquired due to changes in ore type being mined, update your SWPPP with this information.

8.G.6.4 ***Documentation of control measures.*** Document all control measures that you implement consistent with Part 8.G.5.2. If control measures are implemented or planned but are not listed in Part 8.G.5.2 (e.g., substituting a less toxic chemical for a more toxic one), include descriptions of them in your SWPPP. If you are in compliance with dust control requirements under state or county air quality permits, you must include (or summarize, as necessary) what the state or county air quality permit dust control requirements are and how you've achieved compliance with them.

8.G.6.5 ***Employee training***. All employee training(s) must be documented in the SWPPP.

8.G.6.6 ***Certification of permit coverage for commingled non-stormwater discharges***. If you are able, consistent with Part 8.G.5.3 above, to certify that a particular discharge composed of commingled stormwater and non-stormwater is covered under a separate NPDES permit, and that permit subjects the non-stormwater portion to effluent limitations prior to any commingling, retain such certification with your SWPPP. This certification must identify the non-stormwater discharges, the applicable NPDES permit(s), the effluent limitations placed on the non-stormwater discharge by the permit(s), and the points at which the limitations are applied.

8.G.7 Additional Inspection Requirements *(See also Part 3.1)*

Except for earth-disturbing activities conducted prior to active mining activities as defined in Part 8.G.3.2(a) and 8.G.3.2(b), which are subject to Part 8.G.4.4, inspect sites at least quarterly unless adverse weather conditions make the site inaccessible. Sites which discharge to waters designated as Tier 2 or 2.5 or waters which are impaired for sediment or nitrogen must be inspected monthly. See Part 8.G.8.5 for inspection requirements for inactive and unstaffed sites.

8.G.8 Monitoring and Reporting Requirements (See also Part 4)

Note: There are no Part 8.G.8 monitoring and reporting or impaired waters monitoring requirements for inactive and unstaffed sites.

8.G.8.1 Indicator Monitoring (See also Part 4.2.1)

Table 8.G-1 identifies indicator monitoring that applies to the specific subsectors of Sector G. This indicator monitoring applies to both your primary industrial activity and any co-located industrial activities.

Table 8.G-1		
Subsector (You may be subject to requirements for more than one sector/subsector)	**Indicator Monitoring Parameter**	**Indicator Monitoring Threshold**
Applies to all Sector G (Subsectors G1 and G2) facilities with stormwater discharges from paved surfaces that will be initially sealed or re-sealed with coal-tar sealcoat where industrial activities are located during coverage under this permit	Polycyclic Aromatic Hydrocarbons (PAHs)*	Report Only/ No thresholds or baseline values

* Monitoring is required for the 16 individual PAHs identified at Appendix A to 40 CFR Part 423: naphthalene, acenaphthylene, acenaphthene, fluorene, phenanthrene, anthracene, fluoranthene, pyrene, benzo[a]anthracene, chrysene, benzo[b]fluoranthene, benzo[k]fluoranthene, benzo[a]pyrene, benzo[g,h,i]perylene, indeno[1,2,3-c,d]pyrene, and dibenz[a,h]anthracene.

8.G.8.2 *Benchmark Monitoring for Active Copper Ore Mining and Dressing Facilities.*

Table 8.G-2 identifies benchmarks that apply to active copper ore mining and dressing facilities. These benchmarks apply to both your primary industrial activity and any co- located industrial activities.

Table 8.G-2		
Subsector (You may be subject to requirements for more than one sector/subsector)	**Parameter**	**Benchmark Monitoring Concentration**
Subsector G1. Active Copper Ore Mining and Dressing Facilities (SIC 1021)	Total Suspended Solids (TSS)	100 mg/L
	Nitrate plus Nitrite Nitrogen	0.68 mg/L
	Chemical Oxygen Demand (COD)	120 mg/L

8.G.8.3 ***Benchmark Monitoring Requirements for Discharges From Waste Rock and Overburden Piles at Active Metal Mining Facilities.*** For discharges from waste rock and overburden piles, perform benchmark monitoring once in the first year for the parameters listed in Table 8.G-3, and twice annually in all subsequent years of coverage under this permit for any parameters for which the benchmark has been exceeded. You are also required to conduct analytic monitoring for the parameters listed in Table 8.G-4 in accordance with the requirements in Part 8.G.8.4. The Director may also notify you that you must perform additional monitoring to accurately characterize the quality and quantity of pollutants discharged from your waste rock and overburden piles.

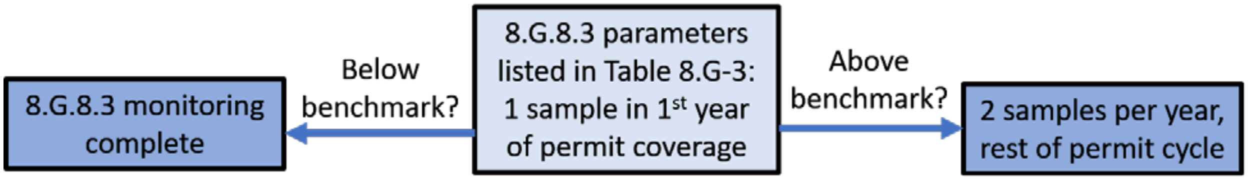

Table 8.G-3.

Subsector (Discharges may be subject to requirements for more than one sector/subsector)	Parameter	Benchmark Monitoring Concentration
Subsector G2. Iron Ores; Copper Ores; Lead and Zinc Ores; Gold and Silver Ores; Ferroalloy Ores, Except Vanadium; and Miscellaneous Metal Ores (SIC Codes 1011, 1021, 1031, 1041, 1044, 1061, 1081, 1094, 1099) (Note: when analyzing hardness for a suite of metals, it is more cost effective to add analysis of calcium and magnesium, and have hardness calculated than to require hardness analysis separately)	Total Suspended Solids (TSS)	100 mg/L
	Turbidity	50 NTU
	pH	6.0-9.0 s.u.
	Hardness (as $CaCO_3$; calc. from Ca, Mg)[2]	no benchmark value
	Total Recoverable Antimony	640 µg/L
	Total Recoverable Arsenic (freshwater) Total Recoverable Arsenic (saltwater)[1]	150 µg/L 69 µg/L
	Total Recoverable Beryllium	130 µg/L
	Total Recoverable Cadmium (freshwater)[2] Total Recoverable Cadmium (saltwater)[1]	Hardness Dependent 33 µg/L
	Total Recoverable Copper (freshwater) Total Recoverable Copper (saltwater)[1]	5.19 µg/L 4.8 µg/L
	Total Recoverable Lead (freshwater)[2] Total Recoverable Lead (saltwater)[1]	Hardness Dependent 210 µg/L
	Total Recoverable Mercury (freshwater) Total Recoverable Mercury (saltwater)[1]	1.4 µg/L 1.8 µg/L
	Total Recoverable Nickel (freshwater)[2] Total Recoverable Nickel (saltwater)[1]	Hardness Dependent 74 µg/L
	Total Recoverable Selenium (freshwater) Total Recoverable Selenium (saltwater)[1]	1.5 µg/L for still/standing (lentic) waters; 3.1 µg/L for flowing (lotic) waters 290 µg/L
	Total Recoverable Silver (freshwater)[2] Total Recoverable Silver (saltwater)[1]	Hardness Dependent 1.9 µg/L
	Total Recoverable Zinc (freshwater)[2] Total Recoverable Zinc (saltwater)[1]	Hardness Dependent 90 µg/L

---

[1] Saltwater benchmark values apply to stormwater discharges into saline waters where indicated.

[2] The freshwater benchmark values of some metals are dependent on water hardness. For these parameters,

permittees must determine the hardness of the receiving water (see Appendix J, "Calculating Hardness in Receiving Waters for Hardness Dependent Metals," for methodology), in accordance with Part 4.2.2.1, to identify the applicable 'hardness range' for determining their benchmark value applicable to their facility. Hardness Dependent Benchmarks follow in the table below:

Freshwater Hardness Range	**Cadmium** (µg/L)		**Lead** (µg/L)	**Nickel** (µg/L)	**Silver** (µg/L)	**Zinc** (µg/L)
0-24.99 mg/L	0.49		14	145	0.37	37
25-49.99 mg/L	0.73		24	203	0.80	52
50-74.99 mg/L	1.2		45	314	1.9	80
75-99.99 mg/L	1.7		69	418	3.3	107
100-124.99 mg/L	2.1		95	518	5.0	132
125-149.99 mg/L	2.6		123	614	7.1	157
150-174.99 mg/L	3.1		152	707	9.4	181
175-199.99 mg/L	3.5		182	798	12	204
200-224.99 mg/L	4.0		213	888	15	227
225-249.99 mg/L	4.4		246	975	18	249
250+ mg/L	4.7		262	1019	20	260

8.G.8.4 ***Additional Analytic Monitoring Requirements for Discharges From Waste Rock and Overburden Piles at Active Metal Mining Facilities.*** In addition to the monitoring required in Part 8.G.8.3 for discharges from waste rock and overburden piles, you must also conduct monitoring for additional parameters based on the type of ore you mine at your site. The schedule for monitoring for this Part 8.G.8.4 is the same as specified in Part 8.G.8.3: once in the first year for the parameters listed in Table 8.G-4 (except radium and uranium), and twice annually in all subsequent years of coverage under this permit for any parameters for which the benchmark has been exceeded. Where a parameter in Table 8.G-4 is the same as a pollutant you are required to monitor for in Table 8.G-3 (i.e., for all of the metals), you must use the corresponding benchmark in Table 8.G-3 and you may use any monitoring results conducted for Part 8.G.8.3 to satisfy the monitoring requirement for that parameter for Part 8.G.8.4. For radium and uranium, which do not have corresponding benchmarks in Table 8.G-3, there are no applicable benchmarks. For radium and uranium, you must monitor quarterly (as identified in Part 4.1.7) for your first four full quarters of permit coverage commencing no earlier than [insert 90 days after permit effective date], after which you may discontinue monitoring for these two parameters.

Table 8.G-4. Additional Monitoring Requirements for Discharges from Waste Rock and Overburden Piles

Supplemental Requirements

Type of Ore Mined	**Pollutants of Concern** **Total Suspended Solids (TSS)**	**pH**	**Metals, Total**
Tungsten Ore	X	X	Arsenic, Cadmium (H), Copper, Lead (H), Zinc (H)
Nickel Ore	X	X	Arsenic, Cadmium (H), Copper, Lead (H), Zinc (H)
Aluminum Ore	X	X	Iron
Mercury Ore	X	X	Nickel (H)
Iron Ore	X	X	Iron (Dissolved)

Table 8.G-4. Additional Monitoring Requirements for Discharges from Waste Rock and Overburden Piles

Supplemental Requirements			
	Pollutants of Concern		
Type of Ore Mined	Total Suspended Solids (TSS)	pH	Metals, Total
Platinum Ore			Cadmium (H), Copper, Mercury, Lead (H), Zinc (H)
Titanium Ore	X	X	Iron, Nickel (H), Zinc (H)
Vanadium Ore	X	X	Arsenic, Cadmium (H), Copper, Lead (H), Zinc (H)
Molybdenum	X	X	Arsenic, Cadmium (H), Copper, Lead (H), Mercury, Zinc (H)
Uranium, Radium, and Vanadium Ore	X	X	Chemical Oxygen Demand, Arsenic, Radium (Dissolved and Total), Uranium, Zinc (H)

Note: An "X" indicated for TSS and/or pH means that you are required to monitor for those parameters. (H) indicates that hardness must also be measured when this pollutant is measured.

8.G.8.5 ***Inactive and Unstaffed Sites – Conditional Exemption from No Exposure Requirements for Quarterly Visual Assessments and Routine Facility Inspections.*** As a Sector G facility, if you are seeking to exercise a waiver from the quarterly visual assessment and routine facility inspection requirements for inactive and unstaffed sites (including temporarily inactive sites), you are conditionally exempt from the requirement to certify that "there are no industrial materials or activities exposed to stormwater" in Parts 3.1.5 and 3.2.4.4. This exemption is conditioned on the following:

- If circumstances change and your facility becomes active and/or staffed, this exception no longer applies and you must immediately begin complying with the quarterly visual assessment requirements; and
- EPA retains the authority to revoke this exemption and/or the monitoring waiver where it is determined that the discharge causes, has a reasonable potential to cause, or contributes to an instream excursion above an applicable water quality standard, including designated uses.

Subject to the two conditions above, if your facility is inactive and unstaffed, you are waived from the requirement to conduct quarterly visual assessments and routine facility inspections. You must still do an annual site inspection in accordance with Part 3.1. You are encouraged to inspect your site more frequently where you have reason to believe that severe weather or natural disasters may have damaged control measures or increased discharges.

Table 8.G-5. Applicability of the Multi-Sector General Permit to Stormwater From Active Mining and Dressing Sites, Temporarily Inactive Sites, and Sites Undergoing Reclamation

Discharge/Source of Discharge	Note/Comment
Piles	
Waste rock/overburden	Covered under the MSGP if composed entirely of stormwater and not combined with mine drainage. See note below.
Topsoil	--

Table 8.G-5. Applicability of the Multi-Sector General Permit to Stormwater From Active Mining and Dressing Sites, Temporarily Inactive Sites, and Sites Undergoing Reclamation

Discharge/Source of Discharge	Note/Comment
Roads constructed of waste rock or spent ore	
Onsite haul roads	Covered under the MSGP if composed entirely of stormwater and not combined with mine drainage. See note below.
Offsite haul and access roads	--
Roads not constructed of waste rock or spent ore	
Onsite haul roads	Covered under the MSGP except if mine drainage is used for dust control.
Offsite haul and access roads	--
Milling/concentrating	
Runoff from tailings dams and dikes when constructed of waste rock/tailings	Covered under the MSGP except if process fluids are present and only if composed entirely of stormwater and not combined with mine drainage. See Note below.
Runoff from tailings dams/dikes when not constructed of waste rock and tailings	Covered under the MSGP except if process fluids are present.
Concentration building	Covered under the MSGP If stormwater only and no contact with piles.
Mill site	If stormwater only and no contact with piles.
Ancillary areas	
Office and administrative building and housing	Covered under the MSGP if mixed with stormwater from the industrial area.
Chemical storage area	--
Docking facility	Covered under the MSGP except if excessive contact with waste product that would otherwise constitute mine drainage.
Explosive storage	--
Fuel storage (oil tanks/coal piles)	--
Vehicle and equipment maintenance area/building	--
Parking areas	Covered under the MSGP but coverage unnecessary if only employee and visitor-type parking.
Power plant	
Truck wash area	Covered under the MSGP except when excessive contact with waste product that would otherwise constitute mine drainage.
Reclamation-related areas	
Any disturbed area (unreclaimed)	Covered under the MSGP only if not in active mining area.
Reclaimed areas released from reclamation requirements prior to Dec. 17, 1990	--
Partially/inadequately reclaimed areas or areas not released from reclamation requirements	--

Note: Stormwater from these sources are subject to the NPDES program for stormwater unless mixed with discharges subject to 40 CFR Part 440 that are regulated by another permit prior to mixing. Non-stormwater discharges from these sources are subject to NPDES permitting and may be subject to the effluent limitation guidelines under 40 CFR Part 440. Discharges from overburden/waste rock and overburden/waste rock-related areas are not subject to 40 CFR Part 440 unless: (1) it drains naturally (or is intentionally diverted) to a point source; and (2) combines with "mine drainage" that is otherwise regulated under the Part 440 regulations. For such sources, coverage under this permit would be available if the discharge composed entirely of stormwater does not combine with other sources of mine drainage that are not subject to 40 CFR Part 440, as well as meeting other eligibility criteria contained in Part 1.1 of the permit.

Operators bear the initial responsibility for determining the applicable technology-based standard for such discharges. EPA recommends that operators contact the relevant NPDES permit issuance authority for assistance to determine the nature and scope of the "active mining area" on a mine-by-mine basis, as well as to determine the appropriate permitting mechanism for authorizing such discharges.

8.G.9 <u>Termination of Permit Coverage</u>

8.G.9.1 ***Termination of Permit Coverage for Sites Reclaimed After December 17, 1990***. A site or a portion of a site that has been released from applicable state or federal reclamation requirements after December 17, 1990, is no longer required to maintain coverage under this permit. If the site or portion of a site reclaimed after December 17, 1990, was not subject to reclamation requirements, the site or portion of the site is no longer required to maintain coverage under this permit if the site or portion of the site has been reclaimed as defined in Part 8.G.3.3.

8.G.9.2 ***Termination of Permit Coverage for Sites Reclaimed Before December 17, 1990.*** A site or portion of a site that was released from applicable state or federal reclamation requirements before December 17, 1990, or that was otherwise reclaimed before December 17, 1990, is no longer required to maintain coverage under this permit if the site or portion of the site has been reclaimed. A site or portion of a site is considered to have been reclaimed if: (1) stormwater that comes into contact with raw materials, intermediate byproducts, finished products, and waste products does not have the potential to cause or contribute to violations of state water quality standards, soil disturbing activities related to mining at the sites or portion of the site have been completed, (3) the site or portion of the site has been stabilized to minimize soil erosion, and (4) as appropriate depending on location, size, and the potential to contribute pollutants to stormwater discharges, the site or portion of the site has been revegetated, will be amenable to natural revegetation, or will be left in a condition consistent with the post-mining land use.

Part 8 – Sector-Specific Requirements for Industrial Activity

Subpart H – Sector H – Coal Mines and Coal Mining-Related Facilities

You must comply with Part 8 sector-specific requirements associated with your primary industrial activity and any co-located industrial activities, as defined in Appendix A. The sector- specific requirements apply to those areas of your facility where those sector-specific activities occur. These sector-specific requirements are in addition to any requirements specified elsewhere in this permit.

Note: Where compliance with a requirement in a separate exploration permit, mining permit, reclamation plan, Surface Mining Control and Reclamation Act (SMCRA) requirements, etc. will result in you fully meeting any requirement in this Subpart, you are considered to have complied with the relevant requirement in this Subpart. You must include documentation in your SWPPP describing your rationale for concluding that any particular action on your part is sufficient to comply with the corresponding requirement in this Subpart.

8.H.1 Covered Stormwater Discharges

The requirements in Subpart H apply to stormwater discharges associated with industrial activity from Coal Mines and Coal Mining-Related facilities as identified by the SIC Codes specified under Sector H in Table D-1 of Appendix D.

8.H.2 Limitations on Coverage

8.H.2.1 ***Prohibition of Non-Stormwater Discharges.*** (See also Part 1.1.3) Not covered by this permit: discharges from pollutant seeps or underground drainage from inactive coal mines and refuse disposal areas that do not result from precipitation events, and discharges from floor drains in maintenance buildings and other similar drains in mining and preparation plant areas. (EPA includes these prohibited non-stormwater discharges here solely as a helpful reminder to the operator that the only non-stormwater discharges authorized by this permit are at Part 1.2.2).

8.H.2.2 ***Discharges Subject to Stormwater Effluent Guidelines.*** (See also Part 1.2.1.4) Not authorized by this permit: stormwater discharges subject to an existing effluent limitation guideline at 40 CFR Part 434.

8.H.3 Definitions

The following definitions are not intended to supersede the definitions of active and inactive mining facilities established by 40 CFR 122.26(b)(14)(iii).

8.H.3.1 ***Mining operations*** - For this permit, mining operations are grouped into two distinct categories, with distinct effluent limits and requirements applicable to each: a) earth-disturbing activities conducted prior to active mining activities); and b) active mining activities, which includes reclamation. "Mining operations" can occur at both inactive mining facilities and temporarily inactive mining facilities.

8.H.3.2 ***Earth-disturbing activities conducted prior to active mining activities*** – Consists of two classes of earth-disturbing (i.e., clearing, grading and excavation) activities:

a. Activities performed for purposes of mine site preparation, including: cutting new rights of way (except when related to access road construction); providing access to a mine site for vehicles and equipment (except when related to access road construction); other earth disturbances associated with site preparation activities on any areas where active mining activities have not yet commenced (e.g., for heap leach pads, waste rock facilities, tailings impoundments, wastewater treatment plants); and

b. Construction of staging areas to prepare for erecting structures such as to house project personnel and equipment, mill buildings, etc., and construction of access roads. Earth-disturbing activities associated with the construction of staging areas and the construction of access roads conducted prior to active mining are considered to be "construction" and have additional effluent limits in Part 8.H.4.2.

8.H.3.3 ***Active mining activities*** – Activities related to the extraction, removal or recovery, and preparation of coal; removal of overburden and waste rock to expose mineable minerals; and site reclamation and closure activities. All such activities occur within the "active mining area." Reclamation involves activities undertaken, in compliance with applicable mined land reclamation requirements, to return the land to an appropriate post-mining contour and land use in order to meet applicable federal and state reclamation requirements. In addition, once earth-disturbing activities conducted prior to active mining activities have ceased and all related requirements in Part 8.H.4 have been met, and a well-delineated "active mining area" has been established, all activities (including any clearing, grading, and excavation) that occur within the active mining area are "active mining activities."

8.H.3.4 ***Active mining area*** – A place where work or other activity related to the extraction, removal or recovery of coal is being conducted, except, with respect to surface mines, any area of land on or in which grading has been completed to return the earth to desired contour and reclamation work has begun.

Note: Earth-disturbing activities described in the definition in Part 8.H.3.2 that occur on areas outside the active mining area (e.g., for expansion of the mine into undeveloped territory) are considered "earth-disturbing conducted prior to active mining activities", and must comply with the requirements in Part 8.H.4.

8.H.3.5 ***Inactive coal mining facility*** – A site or portion of a site where coal mining and/or milling occurred in the past but there are no active mining operations occurring as defined above, and where the inactive portion is not covered by an active mining permit issued by the applicable state or federal agency. An inactive coal mining facility has an identifiable owner / operator. Sites where mining claims are being maintained prior to disturbances associated with the extraction, beneficiation, or processing of mined materials and sites where minimal activities are undertaken for the sole purpose of maintaining a mining claim are not considered either active or inactive mining facilities and do not require an NPDES industrial stormwater permit.

8.H.3.6 ***Temporarily inactive coal mining facility*** – A site or portion of a site where coal mining and/or milling occurred in the past but currently are not being actively undertaken, and the facility is covered by an active mining permit issued by the applicable state or federal agency.

8.H.4 Requirements Applicable to Earth-Disturbing Activities Conducted Prior to Active Mining Activities

Stormwater discharges from earth-disturbing activities conducted prior to active mining activities (defined in Part 8.H.3.2) are covered under this permit. For such earth-disturbing activities, you must comply with all applicable requirements in Parts 1-9 of the MSGP except for the technology-based effluent limits in Part 8.H.5 and Part 2.1.2, the inspection requirements in Part 8.H.7 and Part 3, and the monitoring requirements in Part 8.H.8 and Part 4.

Authorized discharges from areas where earth-disturbing activities have ceased and stabilization as specified in Part 8.H.4.19 or 8.H.4.2.11, where appropriate, has been completed (stabilization is not required for areas where active mining activities will occur), are no longer subject to the Part 8.H.4 requirements. At such time, authorized discharges become subject to all other applicable requirements in the MSGP, including the effluent limits in Parts 2.1.2 and 8.H.5, the inspection requirements in Parts 3 and 8.H.7, and the monitoring requirements in Parts 4, 8.H.8, and 8.H.9.

8.H.4.1 ***Technology-Based Effluent Limits Applicable to All Earth-Disturbing Activities Conducted Prior to Active Mining Activities.*** The following technology-based effluent limits apply to authorized discharges from all earth-disturbing activities conducted prior to active mining activities defined in Parts 8.H.3.2(a) and 8.H.3.2(b). These limits supersede the technology-based limits listed in Part 2.1.2 and Part 8.H.5 of the MSGP.

8.H.4.1.1 ***Erosion and sediment control installation requirements.***

- By the time construction activities commence, install and make operational downgradient sediment controls, unless this timeframe is infeasible. If infeasible you must install and make such controls operational as soon as practicable or as soon as site conditions permit.
- All other stormwater controls described in the SWPPP must be installed and made operational as soon as conditions on each portion of the site allows.

8.H.4.1.2 ***Erosion and sediment control maintenance requirements***. You must:

- Ensure that all erosion and sediment controls remain in effective operating condition.
- Wherever you determine that a stormwater control needs maintenance to continue operating effectively, initiate efforts to fix the problem immediately after its discovery, and complete such work by the end of the next work day.
- When a stormwater control must be replaced or significantly repaired, complete the work within 7 days, unless infeasible. If 7 days is infeasible, you must complete the installation or repair as soon as practicable.

8.H.4.1.3 ***Perimeter controls.*** You must:

- Install sediment controls along those perimeter areas of your disturbed area that will receive stormwater, except where site conditions prevent the use of such controls (in which case, maximize their installation to the extent practicable).
- Remove sediment before it accumulates to one-half of the above-ground height of any perimeter control.

8.H.4.1.4 **Sediment track-out.** For construction vehicles and equipment exiting the site directly onto paved roads, you must:

- Use appropriate stabilization techniques to minimize sediment track-out from vehicles and equipment prior to exit;
- Use additional controls to remove sediment from vehicle and equipment tires prior to exit, where necessary;

- Remove sediment that is tracked out onto paved roads by end of the work day.

Note: EPA recognizes that some fine grains may remain visible on the surfaces of off-site streets, other paved areas, and sidewalks even after you have implemented sediment removal practices. Such "staining" is not a violation of Part 8.H.4.1.4.

8.H.4.1.5 ***Soil or sediment stockpiles.*** You must:

- Minimize erosion of stockpiles from stormwater and wind via temporary cover, if feasible.
- Prevent up-slope stormwater flows from causing erosion of stockpiles (e.g., by diverting flows around the stockpile).
- Minimize sediment from stormwater that runs off of stockpiles, using sediment controls (e.g., a sediment barrier or downslope sediment control).

8.H.4.1.6 ***Sediment basins.*** If you intend to install a sediment basin to treat stormwater from your earth-disturbing activities, you must:

- Provide storage for either (1) the 2-year, 24-hour storm, or (2) 3,600 cubic feet per acre drained.
- Prevent erosion of (1) basin embankments using stabilization controls (e.g., erosion control blankets), and (2) the inlet and outlet points of the basin using erosion controls and velocity dissipation devices.

8.H.4.1.7 ***Minimize dust.*** You must minimize the generation of dust through the appropriate application of water or other dust suppression techniques that minimize pollutants being discharged into surface waters.

8.H.4.1.8 **Restrictions on use of treatment chemicals.** If you intend to use sediment treatment chemicals at your site, you are subject to the following minimum requirements:

- Use conventional erosion and sediment controls prior to and after application of chemicals;
- Select chemicals suited to soil type, and expected turbidity, pH, flow rate;
- Minimize the discharge risk from stored chemicals;
- Comply with state/local requirements;
- Use chemicals in accordance with good engineering practices and specifications of chemical supplier;
- Ensure proper training;
- Provide proper SWPPP documentation.

If you plan to use cationic treatment chemicals (as defined in Appendix A), you are ineligible for coverage under this permit, unless you notify your applicable EPA Regional Office in advance and the EPA Regional Office authorizes coverage under this permit after you have included appropriate controls and implementation procedures designed to ensure that your use of cationic treatment chemicals will not lead to a violation of water quality standards.

8.H.4.1.9 ***Site stabilization requirements for earth-disturbing activities performed for purposes of mine site preparation as defined in 8.H.3.2(a)*** (i.e., not applicable to construction of staging areas for structures and access roads as defined in 8.H.3.2(b)). You must comply with the following stabilization requirements except where the intended function of the site accounts for such disturbed earth (e.g., the earth disturbances will become actively mined, or the controls implemented at the active mining area effectively control the disturbance):

- *Temporary stabilization of disturbed areas.* Stabilization measures must be initiated immediately in portions of the site where earth-disturbing activities performed for purposes of mine site preparation (as defined in 8.H.3.2(a)) have temporarily ceased, but in no case more than 14 days after such activities have temporarily ceased. In arid, semi-arid, and drought-stricken areas, or in areas subject to snow or freezing conditions, where initiating perennial vegetative stabilization measures is not possible within 14 days after earth-disturbing activities performed for purposes of mine site preparation has temporarily ceased, temporary vegetative stabilization measures must be initiated as soon as practicable. Until temporary vegetative stabilization is achieved, interim measures such as erosion control blankets with an appropriate seed base and tackifiers must be employed. In areas of the site where earth-disturbing activities performed for purposes of mine site preparation have permanently ceased prior to active mining, temporary stabilization measures must be implemented to minimize mobilization of sediment or other pollutants until active mining activities commence.
- *Final stabilization of disturbed areas.* Stabilization measures must be initiated immediately where earth-disturbing activities performed for purposes of mine site preparation (as defined in 8.H.3.2(a)) have permanently ceased, but in no case more than 14 days after the earth- disturbing activities have permanently ceased. In arid, semi-arid, and drought-stricken areas, or in areas subject to snow or freezing conditions, where initiating perennial vegetative stabilization measures is not possible within 14 days after earth-disturbing activities have permanently ceased, final vegetative stabilization measures must be initiated as soon as possible. Until final stabilization is achieved, temporary stabilization measures, such as erosion control blankets with an appropriate seed base and tackifiers, must be used.

8.H.4.2 ***Additional Technology-Based Effluent Limits Applicable Only to the Construction of Staging Areas for Structures and Access Roads.*** The following technology-based effluent limits apply to authorized discharges from earth-disturbing activities associated with the construction of staging areas and the construction of access roads, as defined in Part 8.H.3.2(b). These limits supersede the technology-based limits listed in Part 2.1.2 and Part 8.H.5 of the MSGP. These limits do not apply to earth-disturbing activities performed for purposes of mine site preparation (as defined in 8.H.3.2(a)).

8.H.4.2.1 ***Area of disturbance.*** You must minimize the amount of soil exposed during construction activities.

8.H.4.2.2 ***Erosion and sediment control design requirements.*** You must:

- Design, install and maintain effective erosion and sediment controls to minimize the discharge of pollutants from construction activities. Account for the following factors in designing your erosion and sediment controls:
- The expected amount, frequency, intensity and duration of precipitation;
- The nature of stormwater discharges and run-on at the site, including factors such as impervious surfaces, slopes and site drainage features;
- The range of soil particle sizes expected to be present on the site.
- Direct discharges from your stormwater controls to vegetated areas of your site to increase sediment removal and maximize stormwater infiltration, including any natural buffers, unless infeasible. Use velocity dissipation devices if necessary to prevent erosion when directing stormwater to vegetated areas.
- If any stormwater flow becomes or will be channelized at your site, you must design erosion and sediment controls to control both peak flowrates and total stormwater volume to minimize channel and streambank erosion and scour in the immediate vicinity of discharge points.
- If you install stormwater conveyance channels, they must be designed to avoid unstabilized areas on the site and to reduce erosion, unless infeasible. In addition, you must minimize erosion of channels and their embankments, outlets, adjacent streambanks, slopes, and downstream waters during discharge conditions through the use of erosion controls and velocity dissipation devices within and along the length of any constructed stormwater conveyance channel, and at any outlet to provide a non-erosive flow velocity.

8.H.4.2.3 ***Natural Buffers.*** For any stormwater discharges from construction activities within 50 feet of a water of the U.S., you must comply with one of the following compliance alternatives:

1. Provide a 50-foot undisturbed natural buffer between construction activities and the water of the U.S.; or

2. Provide an undisturbed natural buffer that is less than 50 feet supplemented by additional erosion and sediment controls, which in combination, achieve a sediment load reduction that is equivalent to a 50-foot undisturbed natural buffer; or

3. If it is infeasible to provide an undisturbed natural buffer of any size, implement erosion and sediment controls that achieve a sediment load reduction that is equivalent to a 50-foot undisturbed natural buffer.

There are exceptions when buffer requirements do not apply:

- There is no stormwater discharge from construction disturbances to a water of the U.S;
- The natural buffer has already been eliminated by preexisting development disturbances;

- The disturbance is for the construction of a water-dependent structure or construction approved under a CWA section 404 permit;
- For linear construction projects, you are not required to comply with the requirements if there are site constraints provided that, to the extent feasible, you limit disturbances within 50 feet of a water of the U.S. and/or you provide supplemental erosion and sediment controls to treat stormwater discharges from any disturbances within 50 feet of a water of the U.S.

See EPA's industrial stormwater website under "Fact Sheets and Guidance" for information on complying with these alternatives: https://www.epa.gov/npdes/stormwater-discharges-industrial-activities.

8.H.4.2.4 ***Soil or sediment stockpiles.*** In addition to the requirements in Part 8.H.4.1.5, you must locate any piles outside of any natural buffers established under Part 8.H.4.2.3.

8.H.4.2.5 ***Sediment basins.*** In addition to the requirements in Part 8.H.4.1.6, you must locate sediment basins outside of any surface waters and any natural buffers established under Part 8.H.4.2.3, and you must utilize outlet structures that withdraw water from the surface, unless infeasible.

8.H.4.2.6 ***Native topsoil preservation.*** *You must preserve native topsoil removed during clearing, grading, or excavation, unless infeasible. Store topsoil in a manner that will maximize its use in reclamation or final vegetative stabilization (e.g., by keeping the topsoil stabilized with seed or similar measures). This requirement does not apply if the intended function of the disturbed area dictates that topsoil be disturbed or removed.*

8.H.4.2.7 ***Steep slopes.*** You must minimize the disturbance of steep slopes. The permit does not prevent or prohibit disturbance on steep slopes.

Depending on site conditions and needs, disturbance on steep slopes may be necessary (e.g., a road cut in mountainous terrain; for grading steep slopes prior to erecting the mine office). Where steep slope disturbances are necessary, you can minimize the disturbances to steep slopes through the implementation of a number of standard erosion and sediment control practices, such as by phasing disturbances in these areas and using stabilization practices specifically for steep grades.

8.H.4.2.8 ***Soil compaction.*** Where final vegetative stabilization will occur or where infiltration practices will be installed, you must either restrict vehicle/ equipment use in these areas to avoid soil compaction or use soil conditioning techniques to support vegetative growth. Minimizing soil compaction is not required where compacted soil is integral to the functionality of the site.

8.H.4.2.9 ***Dewatering Practices****. You are prohibited from discharging ground water or accumulated stormwater that is removed from excavations, trenches, foundations, vaults or other similar points of accumulation, unless such waters are first effectively managed by appropriate controls (e.g., sediment basins or sediment traps, sediment socks, dewatering tanks, tube settlers, weir tanks, or filtration systems). Uncontaminated, non-turbid dewatering water can be discharged without being routed to a control.*

(An uncontaminated discharge is a discharge that meets applicable water quality standards.)

You must also meet the following requirements for dewatering activities:

- Discharge requirements:
  - No discharging visible floating solids or foam;
  - Remove oil, grease and other pollutants from dewatering water via an oil-water separator or suitable filtration device (such as a cartridge filter);
  - Utilize vegetated upland areas of the site, to the extent feasible, to infiltrate dewatering water before discharge. In no case shall waters of the U.S. be considered part of the treatment area;
  - Implement velocity dissipation devices at all points where dewatering water is discharged;
  - Haul backwash water away for disposal or return it to the beginning of the treatment process; and
  - Clean or replace the filter media used in dewatering devices when the pressure differential equals or exceeds the manufacturer's specifications.
  - Treatment chemical restrictions: If you use polymers, flocculants or other chemicals to treat dewatering water, you must comply with the requirements in Parts 8.H.4.1.8.

8.H.4.2.10 ***Pollution prevention requirements.***

- *Prohibited discharges* (this non-exhaustive list of prohibited non-stormwater discharges is included here as a reminder that only the only authorized non-stormwater discharges are those enumerated in Part 1.2.2):
  - Wastewater from washout of concrete;
  - Wastewater from washout and cleanout of stucco, paint, form release oils, curing compounds, and other construction materials;
  - Fuels, oils, or other pollutants used for operation and maintenance of vehicles or equipment;
  - Soaps, solvents, or detergents used in vehicle or equipment washing;
  - Toxic or hazardous substances from a spill or other release.
- *Design and location requirements:* Minimize the discharge of pollutants from pollutant sources by:
  - Minimizing exposure;
  - Using secondary containment, spill kits, or other equivalent measures;
  - Locating pollution sources away from surface waters, storm sewer inlets, and drainageways;
  - Cleaning up spills immediately (do not clean by hosing area down).
- *Pollution prevention requirements for wash waters:* Minimize the discharge of pollutants from equipment and vehicle washing, wheel wash water, and other wash waters. Wash waters must be treated in

a sediment basin or alternative control that provides equivalent or better treatment prior to discharge;

- *Pollution prevention requirements for the storage, handling, and disposal of construction products, materials, and wastes:* Minimize the exposure of building materials, building products, construction wastes, trash, landscape materials, fertilizers, pesticides, herbicides, detergents, sanitary waste, and other materials present on the site to stormwater. Minimization of exposure is not required in cases where the exposure to stormwater will not result in a discharge of pollutants, or where exposure of a specific material or product poses little risk of stormwater contamination (such as final products and materials intended for outdoor use).

8.H.4.2.11 ***Site Stabilization requirements for the construction of staging areas for structures and access roads as defined in Part 8.H.3.2(b***) (i.e., not applicable to earth-disturbing activities performed for purposes of mine site preparation as defined in Part 8.H.3.2(a)). You must comply with the following stabilization requirements, except where the intended function of the site accounts for such disturbed earth (e.g., the area of construction will become actively mined, or the controls implemented at the active mining area effectively control the disturbance):

- By no later than the end of the next work day after construction work in an area has stopped permanently or temporarily ("temporarily" means the land will be idle for a period of 14 days or more but earth-disturbing activities will resume in the future), immediately initiate stabilization measures;
- If using vegetative measures, by no later than 14 days after initiating stabilization:
    - Seed or plant the area, and provide temporary cover to protect the planted area;
    - Once established, vegetation must be uniform, perennial (if final stabilization), and cover at least 70% of stabilized area based on density of native vegetation.
- If using non-vegetative stabilization, by no later than 14 days after initiating stabilization:
    - Install or apply all non-vegetative measures;
    - Cover all areas of exposed soil.

Note: For the purposes of this permit, EPA will consider any of the following types of activities to constitute the initiation of stabilization: 1. Prepping the soil for vegetative or non-vegetative stabilization; 2. Applying mulch or other non-vegetative product to the exposed area; 3. Seeding or planting the exposed area; 4. Starting any of the activities in # 1 – 3 on a portion of the area to be stabilized, but not on the entire area; and 5. Finalizing arrangements to have stabilization product fully installed in compliance with the applicable deadline for completing stabilization.

Exceptions:

- Arid, semi-arid (if construction occurs during seasonally dry period), or drought-stricken areas:
    - Within 14 days of stopping construction work in an area, install any necessary non-vegetative stabilization measures;
    - Initiate vegetative stabilization as soon as conditions on the site allow;
    - Document the schedule that will be followed for initiating and completing vegetative stabilization;
    - Plant the area so that within 3 years the 70% cover requirement is met.
- Sites affected by severe storm events or other unforeseen circumstances:
    - Initiate vegetative stabilization as soon conditions on the site allow;
    - Document the schedule that will be followed for initiating and completing vegetative stabilization;
    - Plant the area so that so that within 3 years the 70% cover requirement is met.

8.H.4.3 *Water Quality-Based Requirements Applicable to Earth-Disturbing Activities Conducted Prior to Active Mining Activities.*

The following water quality-based limits apply to earth-disturbing activities conducted prior to active mining activities defined in Parts 8.H.3.2(a) and 8.H.3.2(b), in addition to the water quality-based limits in Part 2.2 of the MSGP.

Stricter requirements apply if your site will discharge to an impaired water or a water that is identified by your state, tribe, or EPA as a Tier 2 or Tier 2.5 for antidegradation purposes:

- More rapid stabilization of exposed areas: Complete initial stabilization activities within 7 days of stopping earth-disturbing work.
- More frequent site inspections: Once every 7 days and within 24 hours of a storm event of 0.25 inches or greater.

8.H.4.4 *Inspection Requirements Applicable to Earth-Disturbing Activities Conducted Prior to Active Mining Activities.*

The following requirements supersede the inspections requirements in Part 3 and 8.H.7 of the MSGP for earth-disturbing activities conducted prior to active mining activities defined in Parts 8.H.3.2(a) and 8.H.3.2(b).

8.H.4.4.1 Inspection Frequency

- At least once every 7 calendar days, or
- Once every 14 calendar days and within 24 hours of a storm event of 0.25 inches or greater.

Note:

- Inspections only required during working hours;
- Inspections not required during unsafe conditions; and
- If you choose to inspect once every 14 days, you must have a

method for measuring rainfall amount on site (either rain gauge or representative weather station)

Note: To determine if a storm event of 0.25 inches or greater has occurred on your site, you must either keep a properly maintained rain gauge on your site, or obtain the storm event information from a weather station that is representative of your location. For any day of rainfall during normal business hours that measures 0.25 inches or greater, you must record the total rainfall measured for that.

Note: You are required to specify in your SWPPP which schedule you will be following.

Note: "Within 24 hours of the occurrence of a storm event" means that you are required to conduct an inspection within 24 hours once a storm event has produced 0.25 inches, even if the storm event is still continuing. Thus, if you have elected to inspect bi-weekly in and there is a storm event at your site that continues for multiple days, and each day of the storm produces 0.25 inches or more of rain, you are required to conduct an inspection within 24 hours of the first day of the storm and within 24 hours after the end of the storm.

8.H.4.4.2 Reductions in Inspection Frequency

- Stabilized areas: You may reduce the frequency of inspections to once per month in any area of your site where stabilization has occurred pursuant to Part 8.H.4.1.9 or 8.H.4.2.11.
- Arid, semi-arid, and drought stricken areas: If earth-disturbing activities are occurring during the seasonally dry period or during a period in which drought is predicted to occur, you may reduce inspections to once per month and within 24 hours of a 0.25 inch storm event.
- Frozen conditions: You may temporarily suspend or reduce inspections to once per month until thawing conditions occur if frozen conditions are continuous and disturbed areas have been stabilized. For extreme conditions in remote areas, e.g., where transit to the site is perilous/restricted or temperatures are routinely below freezing, you may suspend inspections until the conditions are conducive to safe access, and more frequent inspections can resume.

8.H.4.4.3 **Areas to be Inspected.** You must at a minimum inspect the following areas:

- Disturbed areas;
- Stormwater controls and pollution prevention measures;
- Locations where stabilization measures have been implemented;
- Material, waste, borrow, or equipment storage and maintenance areas;
- Areas where stormwater flows;
- Points of discharge.

8.H.4.4.4 ***What to Check for During Inspections***. At a minimum you must check:

- Whether all stormwater controls are installed, operational, and working as intended;
- Whether any new or modified stormwater controls are needed;
- For conditions that could lead to a spill or leak;
- For visual signs of erosion/sedimentation at points of discharge.

If a discharge is occurring:

- The quality and characteristics of the discharge (see Part 3.2.2.4);
- Whether controls are operating effectively.

8.H.4.4.5 **Inspection Report.** Within 24 hours of an inspection, complete a report that includes:

- Inspection date;
- Name and title of inspector(s);
- Summary of inspection findings;
- Rainfall amount that triggered the inspection (if applicable);
- If it was unsafe to inspect a portion of the site, include documentation of the reason and the location(s);
- Each inspection report must be signed;
- Keep a current copy of all reports at the site or at an easily accessible location.
- *Cessation of Requirements Applicable to Earth-Disturbing Activities Conducted Prior to Active Mining Activities.* The requirements in 8.H.4 no longer apply for any earth- disturbing activities conducted prior to active mining activities as defined in 8.H.3.2(a) or 8.H.3.2(b) where:
- Earth-disturbing activities have ceased; and
- Stabilization has been met consistent with Part 8.H.4.1.9 or 8.H.4.2.11 (not required for areas where active mining activities will occur).

8.H.5 Technology-Based Effluent Limits for Active Mining Activities

Note: These requirements do not apply for any discharges from earth-disturbing activities conducted prior to active mining as defined in 8.H.3.2(a) or 8.H.3.2(b).

8.H.5.1 ***Good Housekeeping Measures.*** (See also Part 2.1.2.2) As part of your good housekeeping program, in order to minimize discharges of pollutants in stormwater, implement control measures such as the following, where determined to be feasible (list not inclusive): using sweepers and covered storage; watering haul roads to minimize dust generation; and conserving vegetation to minimize erosion. For mines subject to dust control requirements under state or county air quality permits, provided the requirements are equivalent, compliance with such air permit dust requirements shall constitute compliance with the dust control effluent limit in Part 2.1.2.10.

8.H.5.2 ***Preventive Maintenance.*** (See also Part 2.1.2.3) Perform inspections or other equivalent measures of storage tanks and pressure lines of fuels, lubricants, hydraulic fluid, and slurry to prevent leaks due to deterioration or faulty connections.

8.H.6 Additional SWPPP Requirements for Mining Operations

Note: The requirements in Part 8.H.6 are not applicable to inactive coal mining facilities.

8.H.6.1 ***Other Applicable Regulations.*** Most active coal mining-related areas (SIC Codes 1221- 1241) are subject to sediment and erosion control regulations of the U.S. Office of Surface Mining (OSM) that enforces the Surface Mining Control and Reclamation Act (SMCRA). OSM has granted authority to most coal-producing states to implement SMCRA through State SMCRA regulations. All SMCRA requirements regarding control of stormwater-related pollutant discharges must be addressed and then documented with the SWPPP (directly or by reference).

8.H.6.2 ***Site Map.*** (See also Part 6.2.2) Document in your SWPPP where any of the following may be exposed to precipitation or stormwater: haul and access roads; railroad spurs, sliding, and internal hauling lines; conveyor belts, chutes, and aerial tramways; equipment storage and maintenance yards; coal handling buildings and structures; inactive mines and related areas; acidic spoil, refuse, or unreclaimed disturbed areas; and liquid storage tanks containing pollutants such as caustics, hydraulic fluids, and lubricants.

8.H.6.3 ***Potential Pollutant Sources.*** (See also Part 6.2.3) Document in your SWPPP the following sources and activities that have potential pollutants associated with them: truck traffic on haul roads and resulting generation of dust or sediment that could be discharged via stormwater; fuel or other liquid storage; pressure lines containing slurry, hydraulic fluid, or other potential harmful liquids; and loading or temporary storage of acidic refuse or spoil.

8.H.6.4 If you are in compliance with dust control requirements under state or county air quality permits, you must include (or summarize, as necessary) what the state or county air quality permit dust control requirements are and how you've achieved compliance with them.

8.H.7 Additional Inspection Requirements (See also Part 3.1)

8.H.7.1 ***Inspections of Active Mining-Related Areas.*** (See also Part 3) Except for earth-disturbing activities conducted prior to active mining activities as defined in Parts 8.H.3.2(a) and 8.H.3.2(b), which are subject to Part 8.H.4.4, perform routine inspections of active mining areas covered by this permit, corresponding with the inspections as performed by SMCRA inspectors, of all mining-related areas required by SMCRA. Also maintain the records of the SMCRA authority representative. See Part 8.H.9.1 for inspection requirements for inactive and unstaffed sties.

8.H.7.2 ***Sediment and Erosion Control.*** (See also Part 2.1.2.5) As indicated in Part 8.H.6.1, SMCRA requirements regarding sediment and erosion control measures must be complied with for those areas subject to SMCRA authority, including inspection requirements.

8.H.7.3 ***Routine Site Inspections. (See also Part 3.1***) Your inspection program must include inspections for pollutants entering the drainage system from activities located on or near coal mining-related areas. Among the areas to be inspected are haul and access roads; railroad spurs, sliding, and internal hauling lines; conveyor belts, chutes, and aerial tramways; equipment storage and maintenance yards; coal handling buildings and structures; and inactive mines and related areas.

8.H.8 Indicator Monitoring (See also Part 4.2.1)

Table 8.H-1 identifies indicator monitoring that applies to the specific subsectors of Sector H. This indicator monitoring applies to both your primary industrial activity and any co-located industrial activities.

Table 8.H-1		
Subsector (You may be subject to requirements for more than one sector/subsector)	**Indicator Monitoring Parameter**	**Indicator Monitoring Threshold**
Applies to all Sector H (Subsector H1) facilities with stormwater discharges from paved surfaces that will be initially sealed or re-sealed with coal-tar sealcoat where industrial activities are located during coverage under this permit	Polycyclic Aromatic Hydrocarbons (PAHs)*	Report Only/ No thresholds or baseline values
Subsector H1. Coal Mines and Coal Mining-Related Facilities (SIC Code 1221-1241)	Polycyclic Aromatic Hydrocarbons (PAHs)*	Report Only/ No thresholds or baseline values

* Monitoring is required for the 16 individual PAHs identified at Appendix A to 40 CFR Part 423: naphthalene, acenaphthylene, acenaphthene, fluorene, phenanthrene, anthracene, fluoranthene, pyrene, benzo[a]anthracene, chrysene, benzo[b]fluoranthene, benzo[k]fluoranthene, benzo[a]pyrene, benzo[g,h,i]perylene, indeno[1,2,3-c,d]pyrene, and dibenz[a,h]anthracene.

8.H.9 Sector-Specific Benchmarks (See also Part 4.2.2)

Table 8.H-2 identifies benchmarks that apply to the specific subsectors of Sector H. These benchmarks apply to both your primary industrial activity and any co-located industrial activities. Note: There are no Part 8.H. 8 and 8.H.9 monitoring and reporting or impaired waters monitoring requirements for inactive and unstaffed sites.

Table 8.H-2.		
Subsector (You may be subject to requirements for more than one sector/subsector)	**Parameter**	**Benchmark Monitoring Concentration**
Subsector H1. Coal Mines and Related Areas (SIC 1221-1241)	Total Recoverable Aluminum	1,100 µg/L
	Total Suspended Solids (TSS)	100 mg/L

8.H.9.1 ***Inactive and Unstaffed Sites* – Conditional Exemption from No Exposure Requirement for Routine Inspections, Quarterly Visual Assessments, and Indicator, Benchmark and Impaired Waters Monitoring.** As a Sector H facility, if you are seeking to exercise a waiver from either the quarterly visual assessment or the indicator, benchmark, and/or impaired waters monitoring requirements for inactive and unstaffed sites (including temporarily inactive sites), you are conditionally exempt from the requirement to certify that “there are no industrial materials or activities exposed to stormwater” in Parts 3.2.4.4, 4.2.1.3, and 4.2.5.2. Additionally, if you are seeking to reduce your required routine inspection frequency, as is allowed under Part 3.1.5, you are also conditionally exempt from the requirement to certify that “there are no industrial materials or activities exposed to stormwater.” These conditional exemptions are based on the following requirements:

- If circumstances change and your facility becomes active and/or staffed, this exception no longer applies and you must immediately begin complying with the applicable benchmark monitoring requirements as if you were in your first year of permit coverage, and the quarterly visual assessment requirements; and

- EPA retains the authority to revoke this exemption and/or the monitoring waiver where it is determined that the discharge causes, has a reasonable potential to cause or contribute to an instream excursion above an applicable water quality standard, including designated uses.

Subject to the two conditions above, if your facility is inactive and unstaffed, you are waived from the requirement to conduct routine facility inspections, quarterly visual assessments, and benchmark and impaired waters monitoring. You must still conduct an annual site inspection in accordance with Part 3.1. You are encouraged to inspect your site more frequently where you have reason to believe that severe weather or natural disasters may have damaged control measures or increased discharges.

8.H.10 Termination of Permit Coverage

8.H.10.1 ***Termination of Permit Coverage for Sites Reclaimed After December 17, 1990.*** A site or a portion of a site that has been released from applicable state or federal reclamation requirements after December 17, 1990, is no longer required to maintain coverage under this permit. If the site or portion of a site reclaimed after December 17, 1990, was not subject to reclamation requirements, the site or portion of the site is no longer required to maintain coverage under this permit if the site or portion of the site has been reclaimed as defined in Part 8.H.3.5.

8.H.10.2 ***Termination of Permit Coverage for Sites Reclaimed Before December 17, 1990.*** A site or portion of a site that was released from applicable state or federal reclamation requirements before December 17, 1990, or that was otherwise reclaimed before December 17, 1990, is no longer required to maintain coverage under this permit if the site or portion of the site has been reclaimed. A site or portion of a site is considered to have been reclaimed if: (1) stormwater that comes into contact with raw materials, intermediate byproducts, finished products, and waste products does not have the potential to cause or contribute to violations of state water quality standards,

(2) soil disturbing activities related to mining at the sites or portion of the site have been completed, (3) the site or portion of the site has been stabilized to minimize soil erosion, and (4) as appropriate depending on location, size, and the potential to contribute pollutants to stormwater discharges, the site or portion of the site has been revegetated, will be amenable to natural revegetation, or will be left in a condition consistent with the post-mining land use.

Part 8 – Sector-Specific Requirements for Industrial Activity

Subpart I – Sector I – Oil and Gas Extraction

You must comply with Part 8 sector-specific requirements associated with your primary industrial activity and any co-located industrial activities, as defined in Appendix A. The sector- specific requirements apply to those areas of your facility where those sector-specific activities occur. These sector-specific requirements are in addition to any requirements specified elsewhere in this permit.

8.I.1 Covered Stormwater Discharges.

The requirements in Subpart I apply to stormwater discharges associated with industrial activity from Oil and Gas Extraction facilities as identified by the SIC Codes specified under Sector I in Table D-1 of Appendix D of the permit.

8.I.1.1 Discharges of stormwater from field activities or operations associated with oil and gas exploration, production, processing, or treatment operations or transmission facilities are exempt from NPDES permit coverage unless, in accordance with 40 CFR 122.26(c)(1)(iii), the facility:

- Has had a discharge of stormwater resulting in the discharge of a reportable quantity for which notification is or was required pursuant to 40 CFR 117.21 or 40 CFR 302.6 at any time since November 16, 1987; or
- Has had a discharge of stormwater resulting in the discharge of a reportable quantity for which notification is or was required pursuant to 40 CFR 110.6 at any time since November 16, 1987; or
- Contributes to a violation of a water quality standard.

Any stormwater discharges that require permit coverage as a result of meeting one of the conditions of 122.26(c)(1)(iii) may be covered under this permit unless otherwise required to obtain coverage under an alternative NPDES general permit or an individual NPDES permit as specified in Part 1.3.8.

8.I.2 Limitations on Coverage

8.I.2.1 ***Stormwater Discharges Subject to Effluent Limitation Guidelines.*** (See also Part 4.2.3) This permit does not authorize stormwater discharges from drilling operations that are subject to nationally established effluent limitation guidelines found at 40 CFR Part 435, respectively.

8.I.2.2 ***Non-Stormwater Discharges. Discharges of vehicle and equipment wash water, including tank cleaning operations, are not authorized by this permit***. Alternatively, wash water discharges must be authorized under a separate NPDES permit, or be discharged to a sanitary sewer in accordance with applicable industrial pretreatment requirements. (EPA includes this prohibited non-stormwater discharge here solely as a helpful reminder to the operator that the only non-stormwater discharges authorized by this permit are at Part 1.2.2).

8.I.3 Additional Technology-Based Effluent Limits

8.I.3.1 ***Vegetative Controls***. Implement vegetative practices designed to preserve existing vegetation, where attainable, and revegetate open areas as soon as practicable after grade drilling. Implement appropriate vegetative practices, such as the following (list not exclusive): temporary or permanent seeding, mulching, sod stabilization, vegetative buffer strips, and tree protection practices. Begin implementing appropriate vegetative practices on all disturbed areas within 14 days following the last activity in that area.

8.I.4 Additional SWPPP Requirements

8.I.4.1 ***Drainage Area Site Map.*** (See also Part 6.2.2) Document in your SWPPP where any of the following may be exposed to precipitation or stormwater: Reportable Quantity (RQ) releases; locations used for the treatment, storage, or disposal of wastes; processing areas and storage areas; chemical mixing areas; construction and drilling areas; all areas subject to the effluent guidelines requirements for "No Discharge" in accordance with 40 CFR 435.32; and the structural controls to achieve compliance with the "No Discharge" requirements.

8.I.4.2 ***Potential Pollutant Sources.*** (See also Part 6.2.3) Also document in your SWPPP the following sources and activities that have potential pollutants associated with them: chemical, cement, mud, or gel mixing activities; drilling or mining activities; and equipment cleaning and rehabilitation activities. In addition, include information about the reportable quantity (RQ) release that triggered the permit application requirements: the nature of the release (e.g., spill of oil from a drum storage area), amount of oil or hazardous substance released, amount of substance recovered, date of the release, cause of the release (e.g., poor handling techniques and lack of containment in the area), areas affected by the release (i.e., land and water), procedures to clean up release, actions or procedures implemented to prevent or improve response to a release, and remaining potential contamination of stormwater from release (taking into account human health risks, the control of drinking water intakes, and the designated uses of the receiving water).

8.I.4.3 ***Erosion and Sediment Controls.*** (See also Part 2.1.2.5) Unless covered by EPA's Construction General Permit (CGP), the additional documentation requirements for sediment and erosion controls for well drillings and sand/shale mining areas include the following:

8.I.4.3.1 ***Site Description.*** Also include a description in your SWPPP of the nature of the exploration activity, estimates of the total area of site and area disturbed due to exploration activity, an estimate of runoff coefficient of the site, a site drainage map, including approximate slopes, and the names of all receiving waters.

8.I.4.3.2 ***Vegetative Controls****. Document vegetative practices used consistent with Part 8.I.3.1 in the SWPPP.*

8.I.5 Additional Inspection Requirements

All erosion and sediment controls must be inspected either: 1) every 7 days; or 2) once every 14 calendar days and within 24 hours of a storm event of 0.25 inches or greater.

8.I.6 Indicator Monitoring (See also Part 4.2.1)

Table 8.I-1 identifies indicator monitoring that applies to the specific subsectors of Sector I. This indicator monitoring applies to both your primary industrial activity and any co-located industrial activities.

Table 8.I-1		
Subsector (You may be subject to requirements for more than one sector/subsector)	**Indicator Monitoring Parameter**	**Indicator Monitoring Threshold**
Applies to all Sector I (Subsector I1) facilities with stormwater discharges from paved surfaces that will be initially sealed or re-sealed with coal-tar sealcoat where industrial activities are located during coverage under this permit	Polycyclic Aromatic Hydrocarbons (PAHs)*	Report Only/ No thresholds or baseline values
Subsector I1. Crude Petroleum and Natural Gas (SIC Code 1311); Natural Gas Liquids (SIC Code 1321); Oil and Gas Field Services (SIC Code 1381-1389)	Chemical Oxygen Demand (COD)	Report Only/ No thresholds or baseline values
	Total Suspended Solids (TSS)	Report Only/ No thresholds or baseline values
	pH	Report Only/ No thresholds or baseline values
	Polycyclic Aromatic Hydrocarbons (PAHs)*	Report Only/ No thresholds or baseline values

* Monitoring is required for the 16 individual PAHs identified at Appendix A to 40 CFR Part 423: naphthalene, acenaphthylene, acenaphthene, fluorene, phenanthrene, anthracene, fluoranthene, pyrene, benzo[a]anthracene, chrysene, benzo[b]fluoranthene, benzo[k]fluoranthene, benzo[a]pyrene, benzo[g,h,i]perylene, indeno[1,2,3-c,d]pyrene, and dibenz[a,h]anthracene.

Part 8 – Sector-Specific Requirements for Industrial Activity

Subpart J – Sector J – Non-Metallic Mineral Mining and Dressing

You must comply with Part 8 sector-specific requirements associated with your primary industrial activity and any co-located industrial activities, as defined in Appendix A. The sector- specific requirements apply to those areas of your facility where those sector-specific activities occur. These sector-specific requirements are in addition to any requirements specified elsewhere in this permit.

Note: Where compliance with a requirement in a separate exploration permit, mining permit, reclamation plan, Surface Mining Control and Reclamation Act (SMCRA) requirements, etc. will result in you fully meeting any requirement in this Subpart, you are considered to have complied with the relevant requirement in this Subpart. You must include documentation in your SWPPP describing your rationale for concluding that any particular action on your part is sufficient to comply with the corresponding requirement in this Subpart.

8.J.1 Covered Stormwater Discharges

The requirements in Subpart J apply to stormwater discharges associated with industrial activity from Active and Inactive Non-Metallic Mineral Mining and Dressing facilities as identified by the SIC Codes specified under Sector J in Table D-1 of Appendix D of the permit.

8.J.1.1 ***Covered Discharges from Inactive Facilities.*** All stormwater discharges.

8.J.1.2 ***Covered Discharges from Active and Temporarily Inactive Facilities.*** All stormwater discharges, except for most stormwater discharges subject to the existing effluent limitation guideline at 40 CFR Part 436. Mine dewatering discharges composed entirely of stormwater or uncontaminated ground water seepage from: construction sand and gravel, industrial sand, and crushed stone mining facilities.

8.J.1.3 ***Covered Discharges from Earth-Disturbing Activities Conducted Prior to Active Mining Activities. All stormwater discharges.***

8.J.1.4 ***Covered Discharges from Sites Undergoing Reclamation. All stormwater discharges.***

8.J.2 Limitations on Coverage.

Most stormwater discharges subject to an existing effluent limitation guideline at 40 CFR Part 436 are not authorized by this permit. The exceptions to this limitation, which are covered by this permit, are mine dewatering discharges composed entirely of stormwater or uncontaminated ground water seepage from construction sand and gravel, industrial sand, and crushed stone mining facilities.

8.J.3 Definitions

The following definitions are not intended to supersede the definitions of active and inactive mining facilities established by 40 CFR 122.26(b)(14)(iii).

8.J.3.1 ***Mining operations*** – For this permit, mining operations are grouped into two distinct categories, with distinct effluent limits and requirements applicable to each: a) earth-disturbing activities conducted prior to active mining activities); and b) active mining activities, which includes reclamation. “Mining operations” can occur at both inactive mining facilities and temporarily inactive mining facilities.

8.J.3.2 ***Earth-disturbing activities conducted prior to active mining activities*** – Consists of two classes of earth-disturbing (i.e., clearing, grading and excavation) activities:

a. activities performed for purposes of mine site preparation, including: cutting new rights of way (except when related to access road construction); providing access to a mine site for vehicles and equipment (except when related to access road construction); other earth disturbances associated with site preparation activities on any areas where active mining activities have not yet commenced (e.g., for heap leach pads, waste rock facilities, tailings impoundments, wastewater treatment plants); and

b. construction of staging areas to prepare for erecting structures such as to house project personnel and equipment, mill buildings, etc., and construction of access roads. Earth-disturbing activities associated with the construction of staging areas and the construction of access roads conducted prior to active mining are considered to be "construction" and have additional effluent limits in Part 8.J.4.2.

8.J.3.3 ***Active mining activities*** – Activities related to the extraction, removal or recovery, and benefication of non-metallic minerals from the earth; removal of overburden and waste rock to expose mineable minerals; and site reclamation and closure activities. All such activities occur within the "active mining area." Reclamation involves activities undertaken, in compliance with applicable mined land reclamation requirements, to return the land to an appropriate post-mining contour and land use in order to meet applicable federal and state reclamation requirements. In addition, once earth- disturbing activities conducted prior to active mining activities have ceased and all related requirements in Part 8.J.4 have been met, and a well-delineated "active mining area" has been established, all activities (including any clearing, grading, and excavation) that occur within the active mining area are "active mining activities

8.J.3.4 ***Active mining area*** – A place where work or other activity related to the extraction, removal or recovery of non-metallic minerals is being conducted, except, with respect to surface mines, any area of land on or in which grading has been completed to return the earth to desired contour and reclamation work has begun.

Note: Earth-disturbing activities described in the definition in Part 8.J.3.2 that occur on areas outside the active mining area (e.g., for expansion of the mine into undeveloped territory) are considered "earth-disturbing conducted prior to active mining activities", and must comply with the requirements in Part 8.J.4.

8.J.3.5 ***Inactive mineral mining facility*** – A site or portion of a site where mineral mining and/or milling occurred in the past but there are no active mining activities occurring as defined above, and where the inactive portion is not covered by an active mining permit issued by the applicable state or federal agency. An inactive mineral mining facility has an identifiable owner / operator. Sites where mining claims are being maintained prior to disturbances associated with the extraction, beneficiation, or processing of mined materials, and sites where minimal activities are undertaken for the sole purpose of maintaining a mining claim are not considered either active or inactive mining facilities and do not require an NPDES industrial stormwater permit.

8.J.3.6 ***Temporarily inactive mineral mining facility*** – A site or portion of a site where non-metallic mineral mining and/or milling occurred in the past but currently are not being actively undertaken, and the facility is covered by an active mining permit issued by the applicable state or federal agency.

8.J.4 Requirements Applicable to Earth-Disturbing Activities Conducted Prior to Active Mining Activities

Stormwater discharges from earth-disturbing activities conducted prior to active mining activities (defined in Part 8.J.3.2) are covered under this permit. For such earth-disturbing activities, you must comply with all applicable requirements in Parts 1-9 of the MSGP except for the technology-based effluent limits in Part 8.J.5 and Part 2.1.2, the inspection requirements in Part 8.J.7 and Part 3, and the monitoring requirements in Part 8.J.8, Part 8.J.9, and Part 4.

Authorized discharges from areas where earth-disturbing activities have ceased and stabilization as specified in Part 8.J.4.1.9 or 8.J.4.2.11, where appropriate, has been completed (stabilization is not required for areas where active mining activities will occur), are no longer subject to the Part 8.J.4 requirements. At such time, authorized discharges become subject to all other applicable requirements in the MSGP, including the effluent limits in Parts 2.1.2 and 8.J.5, the inspection requirements in Parts 3 and 8.J.7, and the monitoring requirements in Parts 4, 8.J.8, and 8.J.9.

8.J.4.1 ***Technology-Based Effluent Limits Applicable to All Earth-Disturbing Activities Conducted Prior to Active mining Activities.*** The following technology-based effluent limits apply to authorized discharges from all earth-disturbing activities conducted prior to active mining activities defined in Part 8.J.3.2(a) and 8.J.3.2(b). These limits supersede the technology-based limits listed in Part 2.1.2 and Part 8.J.5 of the MSGP.

8.J.4.1.1 ***Erosion and sediment control installation requirements.***

- By the time construction activities commence, install and make operational downgradient sediment controls, unless this timeframe is infeasible. If infeasible you must install and make such controls operational as soon as practicable or as soon as site conditions permit.
- All other stormwater controls described in the SWPPP must be installed and made operational as soon as conditions on each portion of the site allows.

8.J.4.1.2 ***Erosion and sediment control maintenance requirements. You must:***

- Ensure that all erosion and sediment controls remain in effective operating condition.
- Wherever you determine that a stormwater control needs maintenance to continue operating effectively, initiate efforts to fix the problem immediately after its discovery, and complete such work by the end of the next work day.
- When a stormwater control must be replaced or significantly repaired, complete the work within 7 days, unless infeasible. If 7 days is infeasible, you must complete the installation or repair as soon as practicable.

8.J.4.1.3 ***Perimeter controls.*** You must:

- Install sediment controls along those perimeter areas of your disturbed area that will receive stormwater, except where site conditions prevent the use of such controls (in which case, maximize their installation to the extent practicable).

- Remove sediment before it accumulates to one-half of the above-ground height of any perimeter control.

8.J.4.1.4 ***Sediment track-out.*** For construction vehicles and equipment exiting the site directly onto paved roads, you must:

- Use appropriate stabilization techniques to minimize sediment track-out from vehicles and equipment prior to exit;
- Use additional controls to remove sediment from vehicle and equipment tires prior to exit, where necessary;
- Remove sediment that is tracked out onto paved roads by end of the work day.

Note: EPA recognizes that some fine grains may remain visible on the surfaces of off-site streets, other paved areas, and sidewalks even after you have implemented sediment removal practices. Such “staining” is not a violation of Part 8.J.4.1.4.

8.J.4.1.5 ***Soil or sediment stockpiles.*** You must:

- Minimize erosion of stockpiles from stormwater and wind via temporary cover, if feasible.
- Prevent up-slope stormwater flows from causing erosion of stockpiles (e.g., by diverting flows around the stockpile).
- Minimize sediment from stormwater that runs off of stockpiles, using sediment controls (e.g., a sediment barrier or downslope sediment control).

8.J.4.1.6 ***Sediment basins****. If you intend to install a sediment basin to treat stormwater from your earth-disturbing activities, you must:*

- Provide storage for either (1) the 2-year, 24-hour storm, or (2) 3,600 cubic feet per acre drained.
- Prevent erosion of (1) basin embankments using stabilization controls (e.g., erosion control blankets), and (2) the inlet and outlet points of the basin using erosion controls and velocity dissipation devices.

8.J.4.1.7 ***Minimize dust.*** You must minimize the generation of dust through the appropriate application of water or other dust suppression techniques that minimize pollutants being discharged into surface waters.

8.J.4.1.8 ***Restrictions on use of treatment chemicals.*** If you intend to use sediment treatment chemicals at your site, you are subject to the following minimum requirements:

- Use conventional erosion and sediment controls prior to and after application of chemicals;
- Select chemicals suited to soil type, and expected turbidity, pH, flow rate;
- Minimize the discharge risk from stored chemicals;
- Comply with state/local requirements;
- Use chemicals in accordance with good engineering practices and specifications of chemical supplier;
- Ensure proper training;
- Provide proper SWPPP documentation.

If you plan to use cationic treatment chemicals (as defined in Appendix A), you are ineligible for coverage under this permit, unless you notify your applicable EPA Regional Office in advance and the EPA Regional Office authorizes coverage under this permit after you have included appropriate controls and implementation procedures designed to ensure that your use of cationic treatment chemicals will not lead to a violation of water quality standards.

8.J.4.1.9 ***Site stabilization requirements for earth-disturbing activities performed for purposes of mine site preparation as defined in 8.J.3.2(a***) (i.e., not applicable to construction of staging areas for structures and access roads as defined in 8.J.3.2(b)). You must comply with the following stabilization requirements except where the intended function of the site accounts for such disturbed earth (e.g., the earth disturbances will become actively mined, or the controls implemented at the active mining area effectively control the disturbance):

- *Temporary stabilization of disturbed areas.* Stabilization measures must be initiated immediately in portions of the site where earth-disturbing activities performed for purposes of mine site preparation (as defined in 8.J.3.2(a)) have temporarily ceased, but in no case more than 14 days after such activities have temporarily ceased. In arid, semi-arid, and drought-stricken areas, or in areas subject to snow or freezing conditions, where initiating perennial vegetative stabilization measures is not possible within 14 days after earth-disturbing activities performed for purposes of mine site preparation has temporarily ceased, temporary vegetative stabilization measures must be initiated as soon as practicable. Until temporary vegetative stabilization is achieved, interim measures such as erosion control blankets with an appropriate seed base and tackifiers must be employed. In areas of the site where earth-disturbing activities performed for purposes of mine site preparation have permanently ceased prior to active mining, temporary stabilization measures must be implemented to minimize mobilization of sediment or other pollutants until active mining activities commence.
- *Final stabilization of disturbed areas.* Stabilization measures must be initiated immediately where earth-disturbing activities performed for purposes of mine site preparation (as defined in 8.J.3.2(a)) have permanently ceased, but in no case more than 14 days after the earth- disturbing activities have permanently ceased. In arid, semi-arid, and drought-stricken areas, or in areas subject to snow or freezing conditions, where initiating perennial vegetative stabilization measures is not possible within 14 days after earth-disturbing activities have permanently ceased, final vegetative stabilization measures must be initiated as soon as possible. Until final stabilization is achieved, temporary stabilization measures, such as erosion control blankets with an appropriate seed base and tackifiers, must be used.

8.J.4.2 ***Additional Technology-Based Effluent Limits Applicable Only to the Construction of Staging Areas for Structures and Access Roads.*** The following technology-based effluent limits apply to authorized discharges from earth-disturbing activities associated with the construction of staging areas and the construction of access roads, as defined in Part 8.J.3.2(b). These limits supersede the technology-based limits listed in Part 2.1.2 and Part 8.J.5 of the MSGP. These limits do not apply to earth-disturbing activities performed for purposes of mine site preparation (as defined in 8.J.3.2(a)).

8.J.4.2.1 ***Area of disturbance***. You must minimize the amount of soil exposed during construction activities.

8.J.4.2.2 ***Erosion and sediment control design requirements.*** You must:

- Design, install and maintain effective erosion and sediment controls to minimize the discharge of pollutants from construction activities. Account for the following factors in designing your erosion and sediment controls:
  - The expected amount, frequency, intensity and duration of precipitation;
  - The nature of stormwater discharges and run-on at the site, including factors such as impervious surfaces, slopes and site drainage features;
  - The range of soil particle sizes expected to be present on the site.
- Direct discharges from your stormwater controls to vegetated areas of your site to increase sediment removal and maximize stormwater infiltration, including any natural buffers, unless infeasible. Use velocity dissipation devices if necessary to prevent erosion when directing stormwater to vegetated areas.
- If any stormwater flow becomes or will be channelized at your site, you must design erosion and sediment controls to control both peak flowrates and total stormwater volume to minimize channel and streambank erosion and scour in the immediate vicinity of discharge points.
- If you install stormwater conveyance channels, they must be designed to avoid unstabilized areas on the site and to reduce erosion, unless infeasible. In addition, you must minimize erosion of channels and their embankments, outlets, adjacent streambanks, slopes, and downstream waters during discharge conditions through the use of erosion controls and velocity dissipation devices within and along the length of any constructed stormwater conveyance channel, and at any outlet to provide a non-erosive flow velocity.

8.J.4.2.3 ***Natural Buffers***. For any stormwater discharges from construction activities within 50 feet of a water of the U.S., you must comply with one of the following compliance alternatives:

1. Provide a 50-foot undisturbed natural buffer between construction activities and the water of the U.S.; or

2. Provide an undisturbed natural buffer that is less than 50 feet supplemented by additional erosion and sediment controls, which in combination, achieve a sediment load reduction that is equivalent to a 50-foot undisturbed natural buffer; or

3. If it is infeasible to provide an undisturbed natural buffer of any size, implement erosion and sediment controls that achieve a sediment load reduction that is equivalent to a 50-foot undisturbed natural buffer.

There are exceptions when buffer requirements do not apply:

- There is no stormwater discharge from construction disturbances to a water of the U.S;
- The natural buffer has already been eliminated by preexisting development disturbances;
- The disturbance is for the construction of a water-dependent structure or construction approved under a CWA section 404 permit;
- For linear construction projects, you are not required to comply with the requirements if there are site constraints provided that, to the extent feasible, you limit disturbances within 50 feet of a water of the U.S. and/or you provide supplemental erosion and sediment controls to treat stormwater discharges from any disturbances within 50 feet of a water of the U.S.

See EPA's industrial stormwater website under "Fact Sheets and Guidance" for information on complying with these alternatives: https://www.epa.gov/npdes/stormwater-discharges-industrial-activities.

8.J.4.2.4 ***Soil or sediment stockpiles***. In addition to the requirements in Part 8.J.4.1.5, you must locate any piles outside of any natural buffers established under Part 8.J.4.2.3.

8.J.4.2.5 ***Sediment basins***. In addition to the requirements in Part 8.J.4.1.6, you must locate sediment basins outside of any surface waters and any natural buffers established under Part 8.J.4.2.3, and you must utilize outlet structures that withdraw water from the surface, unless infeasible.

8.J.4.2.6 ***Native topsoil preservation.*** You must preserve native topsoil removed during clearing, grading, or excavation, unless infeasible. Store topsoil in a manner that will maximize its use in reclamation or final vegetative stabilization (e.g., by keeping the topsoil stabilized with seed or similar measures). This requirement does not apply if the intended function of the disturbed area dictates that topsoil be disturbed or removed.

8.J.4.2.7 ***Steep slopes.*** You must minimize the disturbance of steep slopes. The permit does not prevent or prohibit disturbance on steep slopes.

Depending on site conditions and needs, disturbance on steep slopes may be necessary (e.g., a road cut in mountainous terrain; for grading steep slopes prior to erecting the mine office). Where steep slope disturbances are necessary, you can minimize the disturbances to steep slopes through the implementation of a number of standard erosion and sediment control practices, such as by phasing disturbances in these areas and using stabilization practices specifically for steep grades.

8.J.4.2.8 **Soil compaction.** Where final vegetative stabilization will occur or where infiltration practices will be installed, you must either restrict vehicle/ equipment use in these areas to avoid soil compaction or use soil conditioning techniques to support vegetative growth. Minimizing soil compaction is not required where compacted soil is integral to the functionality of the site.

8.J.4.2.9 **Dewatering Practices.** You are prohibited from discharging ground water or accumulated stormwater that is removed from excavations, trenches, foundations, vaults or other similar points of accumulation, unless such waters are first effectively managed by appropriate controls (e.g., sediment basins or sediment traps, sediment socks, dewatering tanks, tube settlers, weir tanks, or filtration systems). Uncontaminated, non-turbid dewatering water can be discharged without being routed to a control. (An uncontaminated discharge is a discharge that meets applicable water quality standards.)

You must also meet the following requirements for dewatering activities:

- Discharge requirements:
  - No discharging visible floating solids or foam;
  - Remove oil, grease and other pollutants from dewatering water via an oil-water separator or suitable filtration device (such as a cartridge filter);
  - Utilize vegetated upland areas of the site, to the extent feasible, to infiltrate dewatering water before discharge. In no case shall waters of the U.S. be considered part of the treatment area;
  - Implement velocity dissipation devices at all points where dewatering water is discharged;
  - Haul backwash water away for disposal or return it to the beginning of the treatment process; and
  - Clean or replace the filter media used in dewatering devices when the pressure differential equals or exceeds the manufacturer's specifications.
- Treatment chemical restrictions: If you use polymers, flocculants or other chemicals to treat dewatering water, you must comply with the requirements in Parts 8.J.4.1.8.

8.J.4.2.10 ***Pollution prevention requirements.***

- *Prohibited discharges* (this non-exhaustive list of prohibited non-stormwater discharges is included here as a reminder that only the only authorized non-stormwater discharges are those enumerated in Part 1.2.2):
  - Wastewater from washout of concrete;
  - Wastewater from washout and cleanout of stucco, paint, form release oils, curing compounds, and other construction materials;
  - Fuels, oils, or other pollutants used for operation and maintenance of vehicles or equipment;
  - Soaps, solvents, or detergents used in vehicle or equipment washing;
  - Toxic or hazardous substances from a spill or other release.
- *Design and location requirements:* Minimize the discharge of pollutants from pollutant sources by:
  - Minimizing exposure;
  - Using secondary containment, spill kits, or other equivalent measures;
  - Locating pollution sources away from surface waters, storm sewer inlets, and drainageways;
  - Cleaning up spills immediately (do not clean by hosing area

down).

- *Pollution prevention requirements for wash waters:* Minimize the discharge of pollutants from equipment and vehicle washing, wheel wash water, and other wash waters. Wash waters must be treated in a sediment basin or alternative control that provides equivalent or better treatment prior to discharge;
- *Pollution prevention requirements for the storage, handling, and disposal of construction products, materials, and wastes:* Minimize the exposure of building materials, building products, construction wastes, trash, landscape materials, fertilizers, pesticides, herbicides, detergents, sanitary waste, and other materials present on the site to stormwater. Minimization of exposure is not required in cases where the exposure to stormwater will not result in a discharge of pollutants, or where exposure of a specific material or product poses little risk of stormwater contamination (such as final products and materials intended for outdoor use).

8.J.4.2.11 ***Site Stabilization requirements for the construction of staging areas for structures and access roads as defined in 8.J.3.2(b)*** (i.e., not applicable to earth-disturbing activities performed for purposes of mine site preparation as defined in 8.J.3.2(a)). You must comply with the following stabilization requirements, except where the intended function of the site accounts for such disturbed earth (e.g., the area of construction will become actively mined, or the controls implemented at the active mining area effectively control the disturbance):

- By no later than the end of the next work day after construction work in an area has stopped permanently or temporarily ("temporarily" means the land will be idle for a period of 14 days or more but earth-disturbing activities will resume in the future), immediately initiate stabilization measures;
- If using vegetative measures, by no later than 14 days after initiating stabilization:
  - Seed or plant the area, and provide temporary cover to protect the planted area;
  - Once established, vegetation must be uniform, perennial (if final stabilization), and cover at least 70% of stabilized area based on density of native vegetation.
- If using non-vegetative stabilization, by no later than 14 days after initiating stabilization:
  - Install or apply all non-vegetative measures;
  - Cover all areas of exposed soil.

Note: For the purposes of this permit, EPA will consider any of the following types of activities to constitute the initiation of stabilization: 1. Prepping the soil for vegetative or non-vegetative stabilization; 2. Applying mulch or other non- vegetative product to the exposed area; 3. Seeding or planting the exposed area; 4. Starting any of the activities in # 1 – 3 on a portion of the area to be stabilized, but not on the entire area; and 5. Finalizing arrangements to have stabilization product fully installed in compliance with the applicable deadline for completing stabilization.

Exceptions:

- Arid, semi-arid (if construction occurs during seasonally dry period), or drought-stricken areas:
    - Within 14 days of stopping construction work in an area, install any necessary non-vegetative stabilization measures;
    - Initiate vegetative stabilization as soon as conditions on the site allow;
    - Document the schedule that will be followed for initiating and completing vegetative stabilization;
    - Plant the area so that within 3 years the 70% cover requirement is met.
- Sites affected by severe storm events or other unforeseen circumstances:
    - Initiate vegetative stabilization as soon conditions on the site allow;
    - Document the schedule that will be followed for initiating and completing vegetative stabilization;
    - Plant the area so that so that within 3 years the 70% cover requirement is met.

8.J.4.3 *Water Quality-Based Requirements Applicable to Earth-Disturbing Activities Conducted Prior to Active Mining Activities.*

The following water quality-based limits apply to earth-disturbing activities conducted prior to active mining activities defined in Parts 8.J.3.2(a) and 8.J.3.2(b), in addition to the water quality-based limits in Part 2.2 of the MSGP.

Stricter requirements apply if your site will discharge to an impaired water or a water that is identified by your state, tribe, or EPA as a Tier 2 or Tier 2.5 for antidegradation purposes:

- More rapid stabilization of exposed areas: Complete initial stabilization activities within 7 days of stopping construction work.
- More frequent site inspections: Once every 7 days and within 24 hours of a storm event of 0.25 inches or greater.

8.J.4.4 *Inspection Requirements Applicable to Earth-Disturbing Activities Conducted Prior to Active Mining Activities.*

The following requirements supersede the inspections requirements in Part 3 and 8.J.7 of the MSGP for earth-disturbing activities conducted prior to active mining activities defined in Parts 8.J.3.2(a) and 8.J.3.2(b).

8.J.4.4.1 Inspection Frequency

- At least once every 7 calendar days, or
- Once every 14 calendar days and within 24 hours of a storm event of 0.25 inches or greater.

Note: Inspections only required during working hours;

- Inspections not required during unsafe conditions; and

- If you choose to inspect once every 14 days, you must have a method for measuring rainfall amount on site (either rain gauge or representative weather station)

Note: To determine if a storm event of 0.25 inches or greater has occurred on your site, you must either keep a properly maintained rain gauge on your site, or obtain the storm event information from a weather station that is representative of your location. For any day of rainfall during normal business hours that measures 0.25 inches or greater, you must record the total rainfall measured for that day.

Note: You are required to specify in your SWPPP which schedule you will be following.

Note: "Within 24 hours of the occurrence of a storm event" means that you are required to conduct an inspection within 24 hours once a storm event has produced 0.25 inches, even if the storm event is still continuing. Thus, if you have elected to inspect bi-weekly and there is a storm event at your site that continues for multiple days, and each day of the storm produces 0.25 inches or more of rain, you are required to conduct an inspection within 24 hours of the first day of the storm and within 24 hours after the end of the storm.

8.J.4.4.2 ***Reductions in Inspection Frequency***

- Stabilized areas: You may reduce the frequency of inspections to once per month in any area of your site where stabilization has occurred pursuant to Part 8.J.4.1.9 or Part 8.J.4.2.11.
- Arid, semi-arid, and drought stricken areas: If earth-disturbing activities are occurring during the seasonally dry period or during a period in which drought is predicted to occur, you may reduce inspections to once per month and within 24 hours of a 0.25 inch storm event.
- Frozen conditions: You may temporarily suspend or reduce inspections to once per month until thawing conditions occur if frozen conditions are continuous and disturbed areas have been stabilized. For extreme conditions in remote areas, e.g., where transit to the site is perilous/restricted or temperatures are routinely below freezing, you may suspend inspections until the conditions are conducive to safe access, and more frequent inspections can resume.

8.J.4.4.3 **Areas to be Inspected.** ***You must at a minimum inspect the all of the following areas:***

- Disturbed areas;
- Stormwater controls and pollution prevention measures;
- Locations where stabilization measures have been implemented;
- Material, waste, borrow, or equipment storage and maintenance areas;
- Areas where stormwater flows;
- Points of discharge.

8.J.4.4.4 ***What to Check for During Inspections.*** At a minimum you must check:

- Whether all stormwater controls are installed, operational and working as intended;

- Whether any new or modified stormwater controls are needed;
- For conditions that could lead to a spill or leak;
- For visual signs of erosion/sedimentation at points of discharge. If a discharge is occurring:
- The quality and characteristics of the discharge (see Part 3.2.2.4);
- Whether controls are operating effectively.

8.J.4.4.5 ***Inspection Report.*** Within 24 hours of an inspection, complete a report that includes:

- Inspection date;
- Name and title of inspector(s);
- Summary of inspection findings;
- Rainfall amount that triggered the inspection (if applicable);
- If it was unsafe to inspect a portion of the site, include documentation of the reason and the location(s);
- Each inspection report must be signed;
- Keep a current copy of all reports at the site or at an easily accessible location.

8.J.4.5 ***Cessation of Requirements Applicable to Earth-Disturbing Activities Conducted Prior to Active Mining Activities.*** The requirements in 8.J.4 no longer apply for any earth-disturbing activities conducted prior to active mining activities as defined in 8.J.3.2(a) or 8.J.3.2(b) where:

1. Earth-disturbing activities have ceased; and
2. Stabilization has been met consistent with Part 8.J.4.1.9 or Part 8.J.4.2.11 (not required for areas where active mining activities will occur).

8.J.5 Technology-Based Effluent Limits for Active Mining Activities

Note: These requirements do not apply for any discharges from earth-disturbing activities conducted prior to active-mining as defined in 8.J.3.2(a) or 8.J.3.2(b).

8.J.5.1 ***Employee Training.*** Conduct employee training at least annually at active and temporarily inactive sites. (See also Part 2.1.2.8).

8.J.5.2 ***Stormwater Controls.*** Apart from the control measures you implement to meet your Part 2 effluent limits, where necessary to minimize pollutant discharges in stormwater, implement the following control measures at your site. The potential pollutants identified in Part 8.J.6.3 shall determine the priority and appropriateness of the control measures selected.

Stormwater Diversions: Divert stormwater away from potential pollutant sources through implementation of control measures such as the following, where determined to be feasible (list not exclusive): interceptor or diversion controls (e.g., dikes, swales, curbs, berms); pipe slope drains; subsurface drains; conveyance systems (e.g., channels or gutters, open-top box culverts, and waterbars; rolling dips and road sloping; roadway surface water deflector and culverts); or their equivalents. For mines subject to dust control requirements under state or county air quality permits, provided the requirements are equivalent, compliance with such air permit dust requirements shall constitute compliance with the dust control effluent limit in Part 2.1.2.10.

Capping: When capping is necessary to minimize pollutant discharges in stormwater, identify the source being capped and the material used to construct the cap.

Treatment: If treatment of stormwater (e.g., chemical or physical systems, oil and water separators, artificial wetlands) is necessary to protect water quality, describe the type and location of treatment used. Passive and/or active treatment of stormwater is encouraged. Treated stormwater may be discharged as a stormwater source regulated under this permit provided the discharge is not combined with discharges subject to effluent limitation guidelines for the Mineral Mining and Processing Point Source Category (40 CFR Part 436).

8.J.5.3 ***Discharge Testing.*** (See also Part 6.2.3.4) Test or evaluate all discharge points covered under this permit for the presence of specific mining-related but unauthorized non-stormwater discharges such as discharges subject to effluent limitations guidelines (e.g., 40 CFR Part 436). Alternatively (if applicable), you may keep a certification with your SWPPP, per Part 8.J.6.6.

8.J.6 Additional SWPPP Requirements for Mining Operations

Note: The requirements in Part 8.J.6 are not applicable to inactive mineral mining facilities.

8.J.6.1 ***Nature of Industrial Activities.*** (See also Part 6.2.2) Document in your SWPPP the mining and associated activities that can potentially affect the stormwater discharges covered by this permit, including a general description of the location of the site relative to major transportation routes and communities.

8.J.6.2 ***Site Map***. (See also Part 6.2.2) Document in your SWPPP the locations of the following (as appropriate): mining or milling site boundaries; access and haul roads; outline of the drainage areas of each stormwater discharge points within the facility with indications of the types of discharges from the drainage areas; location(s) of all permitted discharges covered under an individual NPDES permit; outdoor equipment storage, fueling, and maintenance areas; materials handling areas; outdoor manufacturing, outdoor storage, and material disposal areas; outdoor chemicals and explosives storage areas; overburden, materials, soils, or waste storage areas; location of mine drainage dewatering or other process water; heap leach pads; off-site points of discharge for mine dewatering and process water; surface waters; boundary of tributary areas that are subject to effluent limitations guidelines; and location(s) of reclaimed areas.

8.J.6.3 ***Potential Pollutant Sources.*** (See also Part 6.2.3) For each area of the mine or mill site where stormwater discharges associated with industrial activities occur, document in your SWPPP the types of pollutants (e.g., heavy metals, sediment) likely to be present in significant amounts. For example, phosphate mining facilities will likely need to document pollutants such as selenium, which can be present in significant amounts in their discharges. Consider these factors: the mineralogy of the waste rock (e.g., acid forming); toxicity and quantity of chemicals used, produced, or discharged; the likelihood of contact with stormwater; vegetation of site (if any); and history of significant leaks or spills of toxic or hazardous pollutants. Also include a summary of any existing waste rock or overburden characterization data and test results for potential generation of acid rock drainage.

8.J.6.4 ***Documentation of Control Measures.*** To the extent that you use any of the control measures in Part 8.J.5.2, document them in your SWPPP per Part 6.2.4. If control measures are implemented or planned but are not listed here (e.g., substituting a less toxic chemical for a more toxic one), include descriptions of them in your SWPPP. If you are in compliance with dust control requirements under state or county air quality permits, you must state (or summarize, as necessary) what the state or county air quality permit dust control requirements are and how you've achieved compliance with them.

8.J.6.5 ***Employee Training***. All employee training(s) conducted in accordance with Part 8.J.5.1 must be documented with the SWPPP.

8.J.6.6 ***Certification of Permit Coverage for Commingled Non-Stormwater Discharges***. If you determine that you are able to certify, consistent with Part 8.J.5.3, that a particular discharge composed of commingled stormwater and non-stormwater is covered under a separate NPDES permit, and that permit subjects the non-stormwater portion to effluent limitations prior to any commingling, you must retain such certification with your SWPPP. This certification must identify the non-stormwater discharges, the applicable NPDES permit(s), the effluent limitations placed on the non-stormwater discharge by the permit(s), and the points at which the limitations are applied.

8.J.7 Additional Inspection Requirements (See also Part 3.1)

Except for earth-disturbing activities conducted prior to active mining activities as defined in Part 8.J.3.2(a) and Part 8.J.3.2(b), which are subject to Part 8.J.4.4, perform inspections at least quarterly unless adverse weather conditions make the site inaccessible. Sites which discharge to waters which are designated as Tier 2 or 2.5 or waters which are impaired for sediment or nitrogen must be inspected monthly. See Part 8.J.9.1 for inspection requirements for inactive and unstaffed sites.

8.J.8 Indicator Monitoring (See also Part 4.2.1)

Table 8.J-1 identifies indicator monitoring that applies to the specific subsectors of Sector J. This indicator monitoring applies to both your primary industrial activity and any co-located industrial activities.

Table 8.J-1

Subsector (You may be subject to requirements for more than one sector/subsector)	Indicator Monitoring Parameter	Indicator Monitoring Threshold
Applies to all Sector J (Subsectors J1, J2, and J3) facilities with stormwater discharges from paved surfaces that will be initially sealed or re-sealed with coal-tar sealcoat where industrial activities are located during coverage under this permit	Polycyclic Aromatic Hydrocarbons (PAHs)*	Report Only/ No thresholds or baseline values
Subsector J3. Clay, Ceramic, and Refractory Materials (SIC Code 1455, 1459); Chemical and Fertilizer Mineral Mining (SIC Code 1474-1479)	Chemical Oxygen Demand (COD)	Report Only/ No thresholds or baseline values
	Total Suspended Solids (TSS)	Report Only/ No thresholds or baseline values
	pH	Report Only/ No thresholds or baseline values

* Monitoring is required for the 16 individual PAHs identified at Appendix A to 40 CFR Part 423: naphthalene, acenaphthylene, acenaphthene, fluorene, phenanthrene, anthracene, fluoranthene, pyrene, benzo[a]anthracene, chrysene, benzo[b]fluoranthene, benzo[k]fluoranthene, benzo[a]pyrene, benzo[g,h,i]perylene, indeno[1,2,3-c,d]pyrene, and dibenz[a,h]anthracene.

8.J.9 Sector-Specific Benchmarks (See also Part 4.2.2)

Table 8.J-2 identifies benchmarks that apply to the specific subsectors of Sector J. These benchmarks apply to both your primary industrial activity and any co-located industrial activities. Note: There are no Part 8.J.9 monitoring and reporting or impaired waters monitoring requirements for inactive and unstaffed sites.

Table 8.J-2.

Subsector (You may be subject to requirements for more than one sector/subsector)	Parameter	Benchmark Monitoring Concentration
Subsector J1. Sand and Gravel Mining (SIC 1442, 1446)	Nitrate plus Nitrite Nitrogen	0.68 mg/L
	Total Suspended Solids (TSS)	100 mg/L
Subsector J2. Dimension and Crushed Stone and Nonmetallic Minerals (except fuels) (SIC 1411, 1422-1429, 1481, 1499)	Total Suspended Solids (TSS)	100 mg/L

8.J.9.1 ***Inactive and Unstaffed Sites* – Conditional Exemption from No Exposure Requirement for Routine Inspections, Quarterly Visual Assessments, and Indicator, Benchmark, and Impaired Waters Monitoring.** As a Sector J facility, if you are seeking to exercise a waiver from either the routine inspection, quarterly visual assessment or the indicator, benchmark and/or impaired monitoring requirements for inactive and unstaffed sites (including temporarily inactive sites), you are conditionally exempt from the requirement to certify that "there are no industrial materials or activities exposed to stormwater" in Parts 3.1.5, 3.2.4.4, 4.2.1.3, and 4.2.5.2. This exemption is conditioned on the following:

- If circumstances change and your facility becomes active and/or staffed, this exception no longer applies and you must immediately begin complying with the applicable benchmark monitoring requirements as if you were in your first year of permit coverage, and the quarterly visual assessment requirements; and
- EPA retains the authority to revoke this exemption and/or the monitoring waiver where it is determined that the discharge causes, has a reasonable potential to cause, or contributes to an instream excursion above an applicable water quality standard, including designated uses.

Subject to the two conditions above, if your facility is inactive and unstaffed, you are waived from the requirement to conduct routine facility inspections, quarterly visual assessments, and benchmark and impaired waters monitoring. You must still conduct an annual site inspection in accordance with Part 3.1. You are encouraged to inspect your site more frequently where you have reason to believe that severe weather or natural disasters may have damaged control measures or increased discharges.

8.J.10 Effluent Limitations Based on Effluent Limitations Guidelines (See also Part 4.2.3.1)

Table 8.J-3 identifies effluent limits that apply to the industrial activities described below.

Compliance with these effluent limits is to be determined based on discharges from these industrial activities independent of commingling with any other waste streams that may be covered under this permit.

Table 8.J-3

Industrial Activity	Parameter	Effluent Limitation[1]
Mine dewatering discharges at crushed stone mining facilities (SIC 1422 - 1429)	pH	6.0 - 9.0
Mine dewatering discharges at construction sand and gravel mining facilities (SIC 1442)	pH	6.0 - 9.0
Mine dewatering discharges at industrial sand mining facilities (SIC 1446)	Total Suspended Solids (TSS)	25 mg/L, monthly avg.
		45 mg/L, daily maximum
	pH	6.0 - 9.0

[1] Monitor annually.

8.J.11 Termination of Permit Coverage

8.J.11.1 ***Termination of Permit Coverage for Sites Reclaimed After December 17, 1990.*** A site or a portion of a site that has been released from applicable state or federal reclamation requirements after December 17, 1990, is no longer required to maintain coverage under this permit. If the site or portion of a site reclaimed after December 17, 1990, was not subject to reclamation requirements, the site or portion of the site is no longer required to maintain coverage under this permit if the site or portion of the site has been reclaimed as defined in Part 8.J.3.5.

8.J.11.2 ***Termination of Permit Coverage for Sites Reclaimed Before December 17, 1990.*** A site or portion of a site that was released from applicable state or federal reclamation requirements before December 17, 1990, or that was otherwise reclaimed before December 17, 1990, is no longer required to maintain coverage under this permit if the site or portion of the site has been reclaimed. A site or portion of a site is considered to have been reclaimed if: (1) stormwater that comes into contact with raw materials, intermediate byproducts, finished products, and waste products does not have the potential to cause or contribute to violations of state water quality standards, (2) soil disturbing activities related to mining at the sites or portion of the site have been completed, (3) the site or portion of the site has been stabilized to minimize soil erosion, and (4) as appropriate depending on location, size, and the potential to contribute pollutants to stormwater discharges, the site or portion of the site has been revegetated, will be amenable to natural revegetation, or will be left in a condition consistent with the post-mining land use.

Part 8 – Sector-Specific Requirements for Industrial Activity
Subpart K – Sector K – Hazardous Waste Treatment, Storage, or Disposal Facilities

You must comply with Part 8 sector-specific requirements associated with your primary industrial activity and any co-located industrial activities, as defined in Appendix A. The sector- specific requirements apply to those areas of your facility where those sector-specific activities occur. These sector-specific requirements are in addition to any requirements specified elsewhere in this permit.

8.K.1 Covered Stormwater Discharges

The requirements in Subpart K apply to stormwater discharges associated with industrial activity from Hazardous Waste Treatment, Storage, or Disposal facilities (TSDFs) as identified by the Activity Code specified under Sector K in Table D-1 of Appendix D of the permit.

8.K.2 Industrial Activities Covered by Sector K

This permit authorizes stormwater discharges associated with industrial activity from facilities that treat, store, or dispose of hazardous wastes and that are operating under interim status or a permit under subtitle C of RCRA.

Disposal facilities that have been properly closed and capped, and have no significant materials exposed to stormwater, are considered inactive and do not require permits.

8.K.3 Limitations on Coverage

8.K.3.1 ***Prohibition of Non-Stormwater Discharges.*** (See also Part 1.1.3) The following are not authorized by this permit: leachate, gas collection condensate, drained free liquids, contaminated ground water, laboratory-derived wastewater, and contact wash water from washing truck and railcar exteriors and surface areas that have come in direct contact with solid waste at the landfill facility. (EPA includes these prohibited non- stormwater discharges here solely as a helpful reminder to the operator that the only non-stormwater discharges authorized by this permit are at Part 1.2.2.)

8.K.3.2 ***Limitations on Coverage for Facilities Providing Commercial TSDF Services.*** For facilities located in Region 6 (see Appendix C) coverage is limited to hazardous waste TSDFs that are self-generating (including occasionally accepting wastes from community household hazardous waste collection events as public service), handle only residential wastes, and/or only store hazardous wastes and do not treat or dispose of them. Coverage under this permit is not available to commercial waste disposal and treatment facilities located in Region 6 that dispose and treat on a commercial basis any produced hazardous wastes (i.e., not their own) as a service to commercial or industrial generators.

8.K.4 Definitions

8.K.4.1 ***Contaminated stormwater*** – stormwater that comes into direct contact with landfill wastes, the waste handling and treatment areas, or landfill wastewater as defined in Part 8.K.4.4. Some specific areas of a landfill that may produce contaminated stormwater include (but are not limited to) the open face of an active landfill with exposed waste (no cover added); the areas around wastewater treatment operations; trucks, equipment, or machinery that has been in direct contact with the waste; and waste dumping areas.

8.K.4.2 ***Drained free liquids*** – aqueous wastes drained from waste containers (e.g., drums) prior to landfilling.

8.K.4.3 ***Landfill*** – an area of land or an excavation in which wastes are placed for permanent disposal, but that is not a land application or land treatment unit, surface impoundment, underground injection well, waste pile, salt dome formation, salt bed formation, underground mine, or cave as these terms are defined in 40 CFR 257.2, 258.2, and 260.10.

8.K.4.4 ***Landfill wastewater*** – as defined in 40 CFR Part 445 (Landfills Point Source Category), all wastewater associated with, or produced by, landfilling activities except for sanitary wastewater, non-contaminated stormwater, contaminated ground water, and wastewater from recovery pumping wells. Landfill wastewater includes, but is not limited to, leachate, gas collection condensate, drained free liquids, laboratory derived wastewater, contaminated stormwater, and contact wash water from washing truck, equipment, and railcar exteriors and surface areas that have come in direct contact with solid waste at the landfill facility.

8.K.4.5 ***Leachate*** – liquid that has passed through or emerged from solid waste and contains soluble, suspended, or miscible materials removed from such waste.

8.K.4.6 ***Non-contaminated stormwater*** – stormwater that does not come into direct contact with landfill wastes, the waste handling and treatment areas, or landfill wastewater as defined in Part 8.K.4.4. Non-contaminated stormwater includes stormwater that flows off the cap, cover, intermediate cover, daily cover, and/or final cover of the landfill.

8.K.5 Indicator Monitoring (See also Part 4.2.1)

Table 8.K-1 identifies indicator monitoring that applies to the specific subsectors of Sector K. This indicator monitoring applies to both your primary industrial activity and any co-located industrial activities.

Table 8.K-1

Subsector (You may be subject to requirements for more than one sector/subsector)	Indicator Monitoring Parameter	Indicator Monitoring Threshold
Applies to all Sector K (Subsector K1) facilities with stormwater discharges from paved surfaces that will be initially sealed or re-sealed with coal-tar sealcoat where industrial activities are located during coverage under this permit	Polycyclic Aromatic Hydrocarbons (PAHs)*	Report Only/ No thresholds or baseline values

* Monitoring is required for the 16 individual PAHs identified at Appendix A to 40 CFR Part 423: naphthalene, acenaphthylene, acenaphthene, fluorene, phenanthrene, anthracene, fluoranthene, pyrene, benzo[a]anthracene, chrysene, benzo[b]fluoranthene, benzo[k]fluoranthene, benzo[a]pyrene, benzo[g,h,i]perylene, indeno[1,2,3-c,d]pyrene, and dibenz[a,h]anthracene.

8.K.6 Sector-Specific Benchmarks (See also Part 4.2.2)

Table 8.K-1 identifies benchmarks that apply to the specific subsectors of Sector K. These benchmarks apply to both your primary industrial activity and any co-located industrial activities.

Table 8.K-1.		
Subsector (You may be subject to requirements for more than one sector/subsector)	**Parameter**	**Benchmark Monitoring Concentration**
Subsector K1. ALL - Industrial Activity Code "HZ" (Note: permit coverage limited in some states). Benchmarks only applicable to discharges not subject to effluent limitations in 40 CFR Part 445 Subpart A (see below).	Ammonia	2.14 mg/L
	Chemical Oxygen Demand (COD)	120 mg/L
	Total Recoverable Arsenic (freshwater) Total Recoverable Arsenic (saltwater)[1]	150 µg/L 69 µg/L
	Total Recoverable Cadmium (freshwater)[2] Total Recoverable Cadmium (saltwater)[1]	Hardness Dependent 33 µg/L
	Total Recoverable Cyanide (freshwater) Total Recoverable Cyanide (saltwater)[1]	22 µg/L 1 µg/L
	Total Recoverable Lead (freshwater)[2] Total Recoverable Lead (saltwater)[1]	Hardness Dependent 210 µg/L
	Total Recoverable Mercury (freshwater) Total Recoverable Mercury (saltwater)[1]	1.4 µg/L 1.8 µg/L
	Total Recoverable Selenium (freshwater) Total Recoverable Selenium (saltwater)[1]	1.5 µg/L for still/standing (lentic) waters; 3.1 µg/L for flowing (lotic) waters 290 µg/L
	Total Recoverable Silver (freshwater)[2] Total Recoverable Silver (saltwater)[1]	Hardness Dependent 1.9 µg/L

[1] Saltwater benchmark values apply to stormwater discharges into saline waters where indicated.

[2] The freshwater benchmark values of some metals are dependent on water hardness. For these parameters, permittees must determine the hardness of the receiving water (see Appendix J, "Calculating Hardness in Receiving Waters for Hardness Dependent Metals," for methodology), in accordance with Part 4.2.2.1, to identify the applicable 'hardness range' for determining their benchmark value applicable to their facility. Hardness Dependent Benchmarks follow in the table below:

Freshwater Hardness Range	**Cadmium** (µg/L)	**Lead** (µg/L)	**Silver** (µg/L)
0-24.99 mg/L	0.49	14	0.37
25-49.99 mg/L	0.73	24	0.80
50-74.99 mg/L	1.2	45	1.9

75-99.99 mg/L	1.7	69	3.3
100-124.99 mg/L	2.1	95	5.0
125-149.99 mg/L	2.6	123	7.1
150-174.99 mg/L	3.1	152	9.4
175-199.99 mg/L	3.5	182	12
200-224.99 mg/L	4.0	213	15
225-249.99 mg/L	4.4	246	18
250+ mg/L	4.7	262	20

8.K.7 Effluent Limitations Based on Effluent Limitations Guidelines (See also Part 4.2.3.1)

Table 8.K-2 identifies effluent limitations that apply to the industrial activities described below. Compliance with these effluent limitations is to be determined based on discharges from these industrial activities independent of commingling with any other waste streams that may be covered under this permit.

Table 8.K-2[1]

Industrial Activity	Parameter	Effluent Limitation
Discharges from hazardous waste landfills subject to effluent limitations in 40 CFR Part 445 Subpart A (see footnote).	Biochemical Oxygen Demand (BOD_5)	220 mg/L, daily maximum
		56 mg/L, monthly avg. maximum
	Total Suspended Solids (TSS)	88 mg/L, daily maximum
		27 mg/L, monthly avg. maximum
	Ammonia	10 mg/L, daily maximum
		4.9 mg/L, monthly avg. maximum
	Alpha Terpineol	0.042 mg/L, daily maximum
		0.019 mg/L, monthly avg. maximum
	Aniline	0.024 mg/L, daily maximum
		0.015 mg/L, monthly avg. maximum
	Benzoic Acid	0.119 mg/L, daily maximum
		0.073 mg/L, monthly avg. maximum
	Naphthalene	0.059 mg/L, daily maximum
		0.022 mg/L, monthly avg. maximum
	p-Cresol	0.024 mg/L, daily maximum
		0.015 mg/L, monthly avg. maximum
	Phenol	0.048 mg/L, daily maximum
		0.029 mg/L, monthly avg. maximum
	Pyridine	0.072 mg/L, daily maximum
		0.025 mg/L, monthly avg. maximum
	Total Arsenic	1.1 mg/L, daily maximum
		0.54 mg/L, monthly avg. maximum
	Total Chromium	1.1 mg/L, daily maximum
		0.46 mg/L, monthly avg. maximum
	Total Zinc	0.535 mg/L, daily maximum
		0.296 mg/L, monthly avg. maximum
	pH	Within the range of 6-9 standard pH units (s.u.)

---

[1] Monitor annually. As set forth at 40 CFR Part 445 Subpart A, these numeric limitations apply to contaminated stormwater discharges from hazardous waste landfills subject to the provisions of RCRA Subtitle C at 40 CFR Parts 264 (Subpart N) and 265 (Subpart N) except for any of the following facilities:

(a) landfills operated in conjunction with other industrial or commercial operations when the landfill receives only wastes generated by the industrial or commercial operation directly associated with the landfill;

(b) landfills operated in conjunction with other industrial or commercial operations when the landfill receives wastes generated by the industrial or commercial operation directly associated with the landfill and also receives other wastes, provided that the other wastes received for disposal are generated by a facility that is subject to the same provisions in 40 CFR Subchapter N as the industrial or commercial operation or that the other wastes received are of similar nature to the wastes generated by the industrial or commercial operation;

(c) landfills operated in conjunction with Centralized Waste Treatment (CWT) facilities subject to 40 CFR Part 437, so long as the CWT facility commingles the landfill wastewater with other non-landfill wastewater for discharge. A landfill directly associated with a CWT facility is subject to this part if the CWT facility discharges landfill wastewater separately from other CWT wastewater or commingles the wastewater from its landfill only with wastewater from other landfills; or

(d) landfills operated in conjunction with other industrial or commercial operations when the landfill receives wastes from public service activities, so long as the company owning the landfill does not receive a fee or other remuneration for the disposal service.

Part 8 – Sector-Specific Requirements for Industrial Activity

Subpart L – Sector L – Landfills, Land Application Sites, and Open Dumps

You must comply with Part 8 sector-specific requirements associated with your primary industrial activity and any co-located industrial activities, as defined in Appendix A. The sector- specific requirements apply to those areas of your facility where those sector-specific activities occur. These sector-specific requirements are in addition to any requirements specified elsewhere in this permit.

8.L.1 Covered Stormwater Discharges

The requirements in Subpart L apply to stormwater discharges associated with industrial activity from Landfills and Land Application Sites as identified by the Activity Code specified under Sector L in Table D-1 of Appendix D of the permit.

8.L.2 Industrial Activities Covered by Sector L

This permit may authorize stormwater discharges for Sector L facilities associated with waste disposal at landfills, land application sites that receive or have received industrial waste, including sites subject to regulation under Subtitle D of RCRA. This permit does not cover discharges from landfills that receive only municipal wastes.

8.L.3 Limitations on Coverage

8.L.3.1 ***Prohibition of Non-Stormwater Discharges.*** (See also Part 1.1.3) The following discharges are not authorized by this permit: leachate, gas collection condensate, drained free liquids, contaminated ground water, laboratory wastewater, and contact wash water from washing truck and railcar exteriors and surface areas that have come in direct contact with solid waste at the landfill facility. (EPA includes these prohibited non- stormwater discharges here solely as a helpful reminder to the operator that the only non-stormwater discharges authorized by this permit are at Part 1.2.2.)

8.L.3.2 ***Prohibition Stormwater Discharges from Open Dumps.*** Discharges from open dumps as defined under RCRA are also not authorized under this permit.

8.L.4 Definitions

8.L.4.1 ***Contaminated stormwater*** – stormwater that comes into direct contact with landfill wastes, the waste handling and treatment areas, or landfill wastewater. Some areas of a landfill that may produce contaminated stormwater include (but are not limited to) the open face of an active landfill with exposed waste (no cover added); the areas around wastewater treatment operations; trucks, equipment, or machinery that has been in direct contact with the waste; and waste dumping areas.

8.L.4.2 ***Drained free liquids*** – aqueous wastes drained from waste containers (e.g., drums) prior to landfilling.

8.L.4.3 ***Landfill wastewater*** – as defined in 40 CFR Part 445 (Landfills Point Source Category) all wastewater associated with, or produced by, landfilling activities except for sanitary wastewater, non-contaminated stormwater, contaminated ground water, and wastewater from recovery pumping wells. Landfill process wastewater includes, but is not limited to, leachate; gas collection condensate; drained free liquids; laboratory- derived wastewater; contaminated stormwater; and contact wash water from washing truck, equipment, and railcar exteriors and surface areas that have come in direct contact with solid waste at the landfill facility.

8.L.4.4 ***Leachate*** – liquid that has passed through or emerged from solid waste and contains soluble, suspended, or miscible materials removed from such waste.

8.L.4.5 ***Non-contaminated stormwater*** – stormwater that does not come into direct contact with landfill wastes, the waste handling and treatment areas, or landfill wastewater.

8.L.5 Additional Technology-Based Effluent Limits

8.L.5.1 ***Preventive Maintenance Program***. (See also Part 2.1.2.3) As part of your preventive maintenance program, maintain the following: all elements of leachate collection and treatment systems, to prevent commingling of leachate with stormwater; the integrity and effectiveness of any intermediate or final cover (including repairing the cover as necessary), to minimize the effects of settlement, sinking, and erosion.

8.L.5.2 ***Erosion and Sedimentation Control.*** (See also Part 2.1.2.5) Provide temporary stabilization (e.g., temporary seeding, mulching, and placing geotextiles on the inactive portions of stockpiles) for the following in order to minimize discharges of pollutants in stormwater: materials stockpiled for daily, intermediate, and final cover; inactive areas of the landfill or open dump; landfills or open dump areas that have gotten final covers but where vegetation has yet to establish itself; and land application sites where waste application has been completed but final vegetation has not yet been established.

8.L.6 Additional SWPPP Requirements

8.L.6.1 ***Drainage Area Site Map***. (See also Part 6.2.2) Document in your SWPPP where any of the following may be exposed to precipitation or stormwater: active and closed landfill cells or trenches, active and closed land application areas, locations where open dumping is occurring or has occurred, locations of any known leachate springs or other areas where uncontrolled leachate may commingle with stormwater, and leachate collection and handling systems.

8.L.6.2 ***Summary of Potential Pollutant Sources***. (See also Part 6.2.3) Document in your SWPPP the following sources and activities that have potential pollutants associated with them: fertilizer, herbicide, and pesticide application; earth and soil moving; waste hauling and loading or unloading; outdoor storage of significant materials, including daily, interim, and final cover material stockpiles as well as temporary waste storage areas; exposure of active and inactive landfill and land application areas; uncontrolled leachate flows; and failure or leaks from leachate collection and treatment systems.

8.L.7 Additional Inspection Requirements (See also Part 3)

8.L.7.1 ***Inspections of Active Sites.*** Except in arid and semi-arid climates, inspect operating landfills, open dumps, and land application sites at least once every 7 days. Focus on areas of landfills that have not yet been finally stabilized; active land application areas, areas used for storage of material and wastes that are exposed to precipitation, stabilization, and structural control measures; leachate collection and treatment systems; and locations where equipment and waste trucks enter and exit the site. Ensure that sediment and erosion control measures are operating properly. For stabilized sites and areas where land application has been completed, or where the climate is arid or semi-arid, conduct inspections at least once every month.

8.L.7.2 ***Inspections of Inactive Sites.*** Inspect inactive landfills, open dumps, and land application sites at least quarterly. Qualified personnel must inspect landfill (or open dump) stabilization and structural erosion control measures, leachate collection and treatment systems, and all closed land application areas.

8.L.8 Additional Post-Authorization Documentation Requirements

8.L.8.1 ***Recordkeeping and Internal Reporting***. Keep records with your SWPPP of the types of wastes disposed of in each cell or trench of a landfill or open dump. For land application sites, track the types and quantities of wastes applied in specific areas.

8.L.9 Indicator Monitoring (See also Part 4.2.1)

Table 8.L-1 identifies indicator monitoring that applies to the specific subsectors of Sector L. This indicator monitoring applies to both your primary industrial activity and any co-located industrial activities.

Table 8.L-1

Subsector (You may be subject to requirements for more than one sector/subsector)	Indicator Monitoring Parameter	Indicator Monitoring Threshold
Applies to all Sector L (Subsectors L1 and L2) facilities with stormwater discharges from paved surfaces that will be initially sealed or re-sealed with coal-tar sealcoat where industrial activities are located during coverage under this permit	Polycyclic Aromatic Hydrocarbons (PAHs)*	Report Only/ No thresholds or baseline values
Subsector L2. All Landfill, Land Application Sites and Open Dumps, except Municipal Solid Waste Landfill (MSWLF) Areas Closed in Accordance with 40 CFR 258.60 (Activity Code LF)	Chemical Oxygen Demand (COD)	Report Only/ No thresholds or baseline values
	Total Suspended Solids (TSS)	Report Only/ No thresholds or baseline values
	pH	Report Only/ No thresholds or baseline values

[*] Monitoring is required for the 16 individual PAHs identified at Appendix A to 40 CFR Part 423: naphthalene, acenaphthylene, acenaphthene, fluorene, phenanthrene, anthracene, fluoranthene, pyrene, benzo[a]anthracene, chrysene, benzo[b]fluoranthene, benzo[k]fluoranthene, benzo[a]pyrene, benzo[g,h,i]perylene, indeno[1,2,3-c,d]pyrene, and dibenz[a,h]anthracene.

8.L.10 Sector-Specific Benchmarks (See also Part 4.2.2)

Table 8.L-2 identifies benchmarks that apply to the specific subsectors of Sector L. These benchmarks apply to both your primary industrial activity and any co-located industrial activities.

Table 8.L-2.		
Subsector (You may be subject to requirements for more than one sector/subsector)	**Parameter**	**Benchmark Monitoring Concentration1**
Subsector L1. All Landfill, Land Application Sites and Open Dumps (Industrial Activity Code "LF")	Total Suspended Solids (TSS)	100 mg/L

[1] Benchmark monitoring required only for discharges not subject to effluent limitations in 40 CFR Part 445 Subpart B (see Table L-3 below).

8.L.11 Effluent Limitations Based on Effluent Limitations Guidelines (See also Part 4.2.3.1)

Table 8.L-3 identifies effluent limitations that apply to the industrial activities described below. Compliance with these effluent limitations is to be determined based on discharges from these industrial activities independent of commingling with any other waste streams that may be covered under this permit.

Table 8.L-3[1]		
Industrial Activity	**Parameter**	**Effluent Limitation**
Discharges from non-hazardous waste landfills subject to effluent limitations in 40 CFR Part 445 Subpart B.	Biochemical Oxygen Demand (BOD_5)	140 mg/L, daily maximum
		37 mg/L, monthly avg. maximum
	Total Suspended Solids (TSS)	88 mg/L, daily maximum
		27 mg/L, monthly avg. maximum
	Ammonia	10 mg/L, daily maximum
		4.9 mg/L, monthly avg. maximum
	Alpha Terpineol	0.033 mg/L, daily maximum
		0.016 mg/L monthly avg. maximum
	Benzoic Acid	0.12 mg/L, daily maximum
		0.071 mg/L, monthly avg. maximum
	p-Cresol	0.025 mg/L, daily maximum
		0.014 mg/L, monthly avg. maximum
	Phenol	0.026 mg/L, daily maximum
		0.015 mg/L, monthly avg. maximum
	Total Zinc	0.20 mg/L, daily maximum
		0.11 mg/L, monthly avg. maximum
	pH	Within the range of 6-9 standard pH units (s.u.)

[1] Monitor annually. As set forth at 40 CFR Part 445 Subpart B, these numeric limitations apply to contaminated stormwater discharges from MSWLFs that have not been closed in accordance with 40 CFR 258.60, and to contaminated stormwater discharges from those landfills that are subject to the provisions of 40 CFR Part 257 except for discharges from any of the following facilities:

(a) landfills operated in conjunction with other industrial or commercial operations, when the landfill receives only wastes generated by the industrial or commercial operation directly associated with the landfill;
(b) landfills operated in conjunction with other industrial or commercial operations, when the landfill receives wastes generated by the industrial or commercial operation directly associated with the landfill and also receives other wastes, provided that the other wastes received for disposal are generated by a facility that is subject to the same provisions in 40 CFR Subchapter N as the industrial or commercial operation, or that the other wastes received are of similar nature to the wastes generated by the industrial or commercial operation;
(c) landfills operated in conjunction with CWT facilities subject to 40 CFR Part 437, so long as the CWT facility commingles the landfill wastewater with other non-landfill wastewater for discharge. A landfill directly

associated with a CWT facility is subject to this part if the CWT facility discharges landfill wastewater separately from other CWT wastewater or commingles the wastewater from its landfill only with wastewater from other landfills; or

(d) landfills operated in conjunction with other industrial or commercial operations when the landfill receives wastes from public service activities, so long as the company owning the landfill does not receive a fee or other remuneration for the disposal service.

Part 8 – Sector-Specific Requirements for Industrial Activity

Subpart M – Sector M – Automobile Salvage Yards

You must comply with Part 8 sector-specific requirements associated with your primary industrial activity and any co-located industrial activities, as defined in Appendix A. The sector- specific requirements apply to those areas of your facility where those sector-specific activities occur. These sector-specific requirements are in addition to any requirements specified elsewhere in this permit.

8.M.1 Covered Stormwater Discharges

The requirements in Subpart M apply to stormwater discharges associated with industrial activity from Automobile Salvage Yards as identified by the SIC Code specified under Sector M in Table D-1 of Appendix D of this permit.

8.M.2 Additional Technology-Based Effluent Limits

8.M.2.1 ***Spill and Leak Prevention Procedures.*** (See also Part 2.1.2.4) Drain vehicles intended to be dismantled of all fluids upon arrival at the site (or as soon thereafter as practicable), or employ some other equivalent means to prevent spills and leaks.

8.M.2.2 ***Employee Training.*** (See also Part 2.1.2.8) If applicable to your facility, address the following areas (at a minimum) in your employee training program: proper handling (collection, storage, and disposal) of oil, used mineral spirits, anti-freeze, mercury switches, and solvents.

8.M.2.3 ***Management of Stormwater.*** (See also Part 2.1.2.6) Implement control measures to minimize discharges of pollutants in stormwater such as the following, where determined to be feasible (list not exclusive): berms or drainage ditches on the property line (to help prevent run-on from neighboring properties); berms for uncovered outdoor storage of oily parts, engine blocks, and above-ground liquid storage; installation of detention ponds; and installation of filtering devices and oil and water separators.

8.M.3 Additional SWPPP Requirements

8.M.3.1 ***Drainage Area Site Map.*** (See also Part 6.2.2) Identify locations used for dismantling, storing, and maintaining used motor vehicle parts. Also identify where any of the following may be exposed to precipitation or stormwater: dismantling areas, parts (e.g., engine blocks, tires, hub caps, batteries, hoods, mufflers) storage areas, and liquid storage tanks and drums for fuel and other fluids.

8.M.3.2 ***Potential Pollutant Sources.*** (See also Part 6.2.3) Assess the potential for the following to contribute pollutants to stormwater discharges: vehicle storage areas, dismantling areas, parts storage areas (e.g., engine blocks, tires, hub caps, batteries, hoods, mufflers), and fueling stations.

8.M.4 Additional Inspection Requirements (See also Part 3.1)

Immediately (or as soon thereafter as practicable) inspect vehicles arriving at the site for leaks. Inspect quarterly for signs of leakage all equipment containing oily parts, hydraulic fluids, any other types of fluids, or mercury switches. Also, inspect quarterly for signs of leakage all vessels and areas where hazardous materials and general automotive fluids are stored, including, but not limited to, mercury switches, brake fluid, transmission fluid, radiator water, and antifreeze.

8.M.5 Indicator Monitoring (See also Part 4.2.1)

Table 8.M-1 identifies indicator monitoring that applies to the specific subsectors of Sector M. This indicator monitoring applies to both your primary industrial activity and any co-located industrial activities.

Table 8.M-1

Subsector (You may be subject to requirements for more than one sector/subsector)	**Indicator Monitoring Parameter**	**Indicator Monitoring Threshold**
Applies to all Sector M (Subsector M1) facilities with stormwater discharges from paved surfaces that will be initially sealed or re-sealed with coal-tar sealcoat where industrial activities are located during coverage under this permit	Polycyclic Aromatic Hydrocarbons (PAHs)*	Report Only/ No thresholds or baseline values
Subsector M1. Automobile Salvage Yards (SIC Code 5015)	Polycyclic Aromatic Hydrocarbons (PAHs)*	Report Only/ No thresholds or baseline values

* Monitoring is required for the 16 individual PAHs identified at Appendix A to 40 CFR Part 423: naphthalene, acenaphthylene, acenaphthene, fluorene, phenanthrene, anthracene, fluoranthene, pyrene, benzo[a]anthracene, chrysene, benzo[b]fluoranthene, benzo[k]fluoranthene, benzo[a]pyrene, benzo[g,h,i]perylene, indeno[1,2,3-c,d]pyrene, and dibenz[a,h]anthracene.

8.M.6 Sector-Specific Benchmarks (See also Part 4.2.3)

Table 8.M-2 identifies benchmarks that apply to Sector M. These benchmarks apply to both your primary industrial activity and any co-located industrial activities.

Table 8.M-2.

Subsector (You may be subject to requirements for more than one sector/subsector)	**Parameter**	**Benchmark Monitoring Concentration**
Subsector M1. Automobile Salvage Yards (SIC 5015)	Total Suspended Solids (TSS)	100 mg/L
	Total Recoverable Aluminum	1,100 µg/L
	Total Recoverable Lead (freshwater)[2]	Hardness Dependent
	Total Recoverable Lead (saltwater)[1]	210 µg/L

[1] Saltwater benchmark values apply to stormwater discharges into saline waters where indicated.

[2] The freshwater benchmark values of some metals are dependent on water hardness. For these parameters, permittees must determine the hardness of the receiving water (see Appendix J, “Calculating Hardness in Receiving Waters for Hardness Dependent Metals,” for methodology), in accordance with Part 4.2.2.1, to identify the applicable ‘hardness range’ for determining their benchmark value applicable to their facility. Hardness Dependent Benchmarks follow in the table below:

Freshwater Hardness Range	Lead (µg/L)
0-24.99 mg/L	14
25-49.99 mg/L	24
50-74.99 mg/L	45
75-99.99 mg/L	69
100-124.99 mg/L	95
125-149.99 mg/L	123
150-174.99 mg/L	152
175-199.99 mg/L	182
200-224.99 mg/L	213
225-249.99 mg/L	246
250+ mg/L	262

Part 8 – Sector-Specific Requirements for Industrial Activity

Subpart N – Sector N – Scrap Recycling and Waste Recycling Facilities

You must comply with Part 8 sector-specific requirements associated with your primary industrial activity and any co-located industrial activities, as defined in Appendix A. The sector- specific requirements apply to those areas of your facility where those sector-specific activities occur. These sector-specific requirements are in addition to any requirements specified elsewhere in this permit.

8.N.1 Covered Stormwater Discharges

The requirements in Subpart N apply to stormwater discharges associated with industrial activity from Scrap Recycling and Waste Recycling facilities as identified by the SIC Code specified under Sector N in Table D-1 of Appendix D of the permit.

8.N.2 Limitation on Coverage

Separate permit requirements have been established for recycling facilities that receive, process, and do wholesale distribution of only source-separated recyclable materials primarily from non-industrial and residential sources (i.e., common consumer products including paper, newspaper, glass, cardboard, plastic containers, and aluminum and tin cans). This includes recycling facilities commonly referred to as material recovery facilities (MRF). See Part 8.N.3.3.

8.N.2.1 ***Prohibition of Non-Stormwater Discharges.*** (See also Part 1.1.3) Non-stormwater discharges from turnings containment areas are not covered by this permit (see also Part 8.N.3.1.3). Discharges from containment areas in the absence of a storm event are prohibited unless covered by a separate NPDES permit. (EPA includes these prohibited non-stormwater discharges here solely as a helpful reminder to the operator that the only non-stormwater discharges authorized by this permit are at Part 1.2.2.)

8.N.3 Additional Technology-Based Effluent Limits

8.N.3.1 ***Scrap and Waste Recycling Facilities (Non-Source Separated, Nonliquid Recyclable Materials).*** The following requirements are for facilities that receive, process, and do wholesale distribution of non-source separated, nonliquid recyclable wastes (e.g., ferrous and nonferrous metals, plastics, glass, cardboard, and paper). These facilities may receive both nonrecyclable and recyclable materials. This section is not intended for those facilities that accept recyclables only from primarily non-industrial and residential sources.

8.N.3.1.1 ***Inbound Recyclable and Waste Material Control Program.*** Minimize the chance of accepting materials that could be significant sources of pollutants by conducting inspections of inbound recyclables and waste materials and through implementation of control measures such as the following, where determined to be feasible (list not exclusive): providing information and education to suppliers of scrap and recyclable waste materials on draining and properly disposing of residual fluids (e.g., from vehicles and equipment engines, radiators and transmissions, oil filled transformers, and individual containers or drums) and removal of mercury switches from vehicles before delivery to your facility; establishing procedures to minimize the potential of any residual fluids from coming into contact with precipitation or stormwater; establishing procedures for accepting scrap lead-acid batteries (additional requirements for the handling, storage, and disposal or recycling of batteries are contained in the scrap lead-acid battery program provisions in Part 8.N.3.1.6); providing training targeted for those personnel engaged in the inspection and acceptance of inbound recyclable materials; and establishing procedures to ensure that liquid wastes, including used oil, are stored in materially compatible and non-leaking containers and are disposed of or recycled in accordance with the Resource Conservation and Recovery Act (RCRA).

8.N.3.1.2 ***Scrap and Waste Material Stockpiles and Storage (Outdoor).*** Minimize contact of stormwater with stockpiled materials, processed materials, and nonrecyclable wastes through implementation of control measures such as the following, where determined to be feasible (list not exclusive): permanent or semi-permanent covers; sediment traps, vegetated swales and strips, catch basin filters, and sand filters to facilitate settling or filtering of pollutants; dikes, berms, containment trenches, culverts, and surface grading to divert stormwater from storage areas; silt fencing; and oil and water separators, sumps, and dry absorbents for areas where potential sources of residual fluids are stockpiled (e.g., automobile engine storage areas).

8.N.3.1.3 ***Stockpiling of Turnings Exposed to Cutting Fluids (Outdoor Storage).*** Minimize contact of stormwater with residual cutting fluids by storing all turnings exposed to cutting fluids under some form of permanent or semi-permanent cover, or establishing dedicated containment areas for all turnings that have been exposed to cutting fluids. Any containment areas must be constructed of concrete, asphalt, or other equivalent types of impermeable material and include a barrier (e.g., berms, curbing, elevated pads) to prevent contact with stormwater run-on. Stormwater from these areas can be discharged, provided that any stormwater is first collected and treated by an oil and water separator or its equivalent. You must regularly maintain the oil and water separator (or its equivalent) and properly dispose of or recycle collected residual fluids.

8.N.3.1.4 ***Scrap and Waste Material Stockpiles and Storage (Covered or Indoor Storage).*** Minimize contact of residual liquids and particulate matter from materials stored indoors or under cover with stormwater through implementation of control measures such as the following, where determined to be feasible (list not exclusive): good housekeeping measures, including the use of dry absorbents or wet vacuuming to contain, dispose of, or recycle residual liquids originating from recyclable containers, and mercury spill kits for spills from storage of mercury switches; not allowing wash water from tipping floors or other processing areas to discharge to the storm sewer system; and disconnecting or sealing off all floor drains connected to the storm sewer system.

8.N.3.1.5 ***Scrap and Recyclable Waste Processing Areas***. Minimize stormwater from coming in contact with scrap processing equipment. Pay attention to operations that generate visible amounts of particulate residue (e.g., shredding) to minimize the contact of accumulated particulate matter and residual fluids with stormwater (i.e., through good housekeeping, preventive maintenance). To minimize discharges of pollutants in stormwater from scrap and recyclable waste processing areas, implement control measures such as the following, where determined to be feasible (list not exclusive): at least once per month inspecting equipment for spills or leaks and malfunctioning, worn, or corroded parts or equipment; establishing a preventive maintenance program for processing equipment; using dry-absorbents or other cleanup practices to collect and dispose of or recycle spilled or leaking fluids or use mercury spill kits for spills from storage of mercury switches; on unattended hydraulic reservoirs over 150 gallons in capacity, installing protection devices such as low-level alarms or equivalent devices, or secondary containment that can hold the entire volume of the reservoir; implementing containment or diversion structures such as dikes, berms, culverts, trenches, elevated concrete pads, and grading to minimize contact of stormwater with outdoor processing equipment or stored materials; using oil and water separators or sumps; installing permanent or semi-permanent covers in processing areas where there are residual fluids and grease; and using retention or detention ponds or basins, sediment traps, vegetated swales or strips, and/or catch basin filters or sand filters for pollutant settling and filtration.

8.N.3.1.6 ***Scrap Lead-Acid Battery Program.*** To minimize the discharge of pollutants in stormwater from lead-acid batteries, properly handle, store, and dispose of scrap lead-acid batteries, and implement control measures such as the following, where determined to be feasible (list not exclusive): segregating scrap lead-acid batteries from other scrap materials; properly handling, storing, and disposing of cracked or broken batteries; collecting and disposing of leaking lead-acid battery fluid; minimizing or eliminating (if possible) exposure of scrap lead-acid batteries to precipitation or stormwater; and providing employee training for the management of scrap batteries.

8.N.3.1.7 ***Spill Prevention and Response Procedures.*** (See also Part 2.1.2.4) Install alarms and/or pump shutoff systems on outdoor equipment with hydraulic reservoirs exceeding 150 gallons in the event of a line break. Alternatively, a secondary containment system capable of holding the entire contents of the reservoir plus room for precipitation can be used. Use a mercury spill kit for any release of mercury from switches, anti-lock brake systems, and switch storage areas.

8.N.3.1.8 ***Supplier Notification Program.*** As appropriate, notify major suppliers which scrap materials will not be accepted at the facility or will be accepted only under certain conditions.

8.N.3.2 *Waste Recycling Facilities (Liquid Recyclable Materials)*

8.N.3.2.1 ***Waste Material Storage (Indoor).*** Minimize or eliminate contact between residual liquids from waste materials stored indoors and from stormwater . The plan may refer to applicable portions of other existing plans, such as Spill Prevention, Control, and Countermeasure (SPCC) plans required under 40 CFR Part 112. To minimize discharges of pollutants in stormwater from indoor waste material storage areas, implement control measures such as the following, where determined to be feasible (list not exclusive): implementing procedures for material handling (including labeling and marking); cleaning up spills and leaks with dry absorbent materials and/or a wet vacuum system; installing appropriate containment structures (e.g., trenching, curbing, gutters, etc.); and installing a drainage system, including appurtenances (e.g., pumps or ejectors, manually operated valves), to handle discharges from diked or bermed areas. Drainage should be discharged to an appropriate treatment facility or sanitary sewer system, or otherwise disposed of properly. These discharges may require coverage under a separate NPDES wastewater permit or industrial user permit under the pretreatment program.

8.N.3.2.2 ***Waste Material Storage (Outdoor).*** Minimize contact between stored residual liquids and precipitation or stormwater. The plan may refer to applicable portions of other existing plans, such as SPCC plans required under 40 CFR Part 112.

Discharges of stormwater from containment areas containing used oil must also be in accordance with applicable sections of 40 CFR Part 112. To minimize discharges of pollutants in stormwater from outdoor waste material storage areas, implement control measures such as the following, where determined to be feasible (list not exclusive): appropriate containment structures (e.g., dikes, berms, curbing, pits) to store the volume of the largest tank, with sufficient extra capacity for precipitation; drainage control and other diversionary structures; corrosion protection and/or leak detection systems for storage tanks; and dry-absorbent materials or a wet vacuum system to collect spills.

8.N.3.2.3 ***Trucks and Rail Car Waste Transfer Areas.*** Minimize pollutants in stormwater discharges from truck and rail car loading and unloading areas. Include measures to clean up minor spills and leaks resulting from the transfer of liquid wastes. To minimize discharges of pollutants in stormwater from truck and rail car waste transfer areas, implement control measures such as the following, where determined to be feasible (list not exclusive): containment and diversionary structures to minimize contact with precipitation or stormwater; and dry clean-up methods, wet vacuuming, roof coverings, and/or stormwater controls.

8.N.3.3 ***Recycling Facilities (Source-Separated Materials).*** The following requirements are for facilities that receive only source-separated recyclables, primarily from non-industrial and residential sources.

8.N.3.3.1 ***Inbound Recyclable Material Control.*** Minimize the chance of accepting nonrecyclables (e.g., hazardous materials) that could be a significant source of pollutants by conducting inspections of inbound materials and through the implementation of control measures such as the following, where determined to be feasible (list not exclusive): providing information and education measures to inform suppliers of recyclables about acceptable and non- acceptable materials; training drivers responsible for pickup of recycled material; clearly marking public drop-off containers regarding which materials can be accepted; rejecting nonrecyclable wastes or household hazardous wastes at the source; and establishing procedures for handling and disposal of nonrecyclable material.

8.N.3.3.2 ***Outdoor Storage.*** Minimize exposure of recyclables to precipitation and stormwater by using good housekeeping measures to prevent accumulation of particulate matter and fluids, particularly in high traffic areas and through implementation of control measure such as the following, where determined to be feasible (list not exclusive): providing totally enclosed drop-off containers for the public; installing a sump and pump with each container pit and treat or discharge collected fluids to a sanitary sewer system; providing dikes and curbs for secondary containment (e.g., around bales of recyclable waste paper); diverting stormwater away from outside material storage areas; providing covers over containment bins, dumpsters, and roll-off boxes; and storing the equivalent of one day's volume of recyclable material indoors.

8.N.3.3.3 ***Indoor Storage and Material Processing.*** Minimize the release of pollutants from indoor storage and processing areas through implementation of control measures such as the following, where determined to be feasible (list not exclusive): scheduling routine good housekeeping measures for all storage and processing areas; prohibiting tipping floor wash water from draining to the storm sewer system; and providing employee training on pollution prevention practices.

8.N.3.3.4 ***Vehicle and Equipment Maintenance.*** Minimize the discharge of pollutants in stormwater from areas where vehicle and equipment maintenance occur outdoors through implementation of control measures such as the following, where determined to be feasible (list not exclusive): minimizing or eliminating outdoor maintenance areas; establishing spill prevention and clean-up procedures in fueling areas; avoiding topping off fuel tanks; diverting stormwater from fueling areas; storing lubricants and hydraulic fluids indoors; and providing employee training on proper handling and storage of hydraulic fluids and lubricants.

8.N.4 Additional SWPPP Requirements

8.N.4.1 ***Drainage Area Site Map.*** (See also Part 6.2.2) Document in your SWPPP the locations of any of the following activities or sources that may be exposed to precipitation or stormwater: scrap and waste material storage; outdoor scrap and waste processing equipment; and containment areas for turnings exposed to cutting fluids.

8.N.4.2 ***Maintenance Schedules/Procedures for Collection, Handling, and Disposal or Recycling of Residual Fluids at Scrap and Waste Recycling Facilities.*** If you are subject to Part 8.N.3.1.3, your SWPPP must identify any applicable maintenance schedule and the procedures to collect, handle, and dispose of or recycle residual fluids.

8.N.5 Additional Inspection Requirements

8.N.5.1 ***Inspections for Waste Recycling Facilities.*** The inspections must be performed quarterly, per Part 3.1, and include, at a minimum, all areas where waste is generated, received, stored, treated, or disposed of and that are exposed to either precipitation or stormwater.

8.N.6 Indicator Monitoring (See also Part 4.2.1)

Table 8.N-1 identifies indicator monitoring that applies to the specific subsectors of Sector N. This indicator monitoring applies to both your primary industrial activity and any co-located industrial activities.

Table 8.N-1		
Subsector (You may be subject to requirements for more than one sector/subsector)	**Indicator Monitoring Parameter**	**Indicator Monitoring Threshold**
Applies to all Sector N (Subsectors N1 and N2) facilities with stormwater discharges from paved surfaces that will be initially sealed or re-sealed with coal-tar sealcoat where industrial activities are located during coverage under this permit	Polycyclic Aromatic Hydrocarbons (PAHs)*	Report Only/ No thresholds or baseline values
Subsector N2. Source-separated Recycling Facility (SIC Code 5093)	Chemical Oxygen Demand (COD)	Report Only/ No thresholds or baseline values
	Total Suspended Solids (TSS)	Report Only/ No thresholds or baseline values
	pH	Report Only/ No thresholds or baseline values

8.N.7 Sector-Specific Benchmarks (See also Part 4.2.2)

Table 8.N-2 identifies benchmarks that apply to Sector N. These benchmarks apply to both your primary industrial activity and any co-located industrial activities.

Table 8.N-2.		
Subsector (You may be subject to requirements for more than one sector/subsector)	**Parameter**	**Benchmark Monitoring Concentration**
Subsector N1. Scrap Recycling and Waste Recycling Facilities except those only receiving source-separate recyclable materials primarily from non-industrial and residential sources (SIC 5093)	Chemical Oxygen Demand (COD)	120 mg/L
	Total Suspended Solids (TSS)	100 mg/L
	Total Recoverable Aluminum	1,100 µg/L
	Total Recoverable Copper (freshwater)[2] Total Recoverable Copper (saltwater)[1]	5.19 µg/L 4.8 µg/L
	Total Recoverable Lead (freshwater)[2] Total Recoverable Lead (saltwater)[1]	Hardness Dependent 210 µg/L
	Total Recoverable Zinc (freshwater)[2] Total Recoverable Zinc (saltwater)[1]	Hardness Dependent 90 µg/L

---

[1] Saltwater benchmark values apply to stormwater discharges into saline waters where indicated.

[2] The freshwater benchmark values of some metals are dependent on water hardness. For these parameters, permittees must determine the hardness of the receiving water (see Appendix J, "Calculating Hardness in Receiving Waters for Hardness Dependent Metals," for methodology), in accordance with Part 4.2.2.1, to identify the applicable 'hardness range' for determining their benchmark value applicable to their facility. Hardness Dependent Benchmarks follow in the table below:

Freshwater Hardness Range	**Lead**	**Zinc**
0-24.99 mg/L	14	37
25-49.99 mg/L	24	52
50-74.99 mg/L	45	80
75-99.99 mg/L	69	107
100-124.99 mg/L	95	132
125-149.99 mg/L	123	157
150-174.99 mg/L	152	181
175-199.99 mg/L	182	204
200-224.99 mg/L	213	227
225-249.99 mg/L	246	249
250+ mg/L	262	260

Part 8 – Sector-Specific Requirements for Industrial Activity

Subpart O – Sector O – Steam Electric Generating Facilities

You must comply with Part 8 sector-specific requirements associated with your primary industrial activity and any co-located industrial activities, as defined in Appendix A. The sector- specific requirements apply to those areas of your facility where those sector-specific activities occur. These sector-specific requirements are in addition to any requirements specified elsewhere in this permit.

8.O.1 Covered Stormwater Discharges

The requirements in Subpart O apply to stormwater discharges associated with industrial activity from Steam Electric Power Generating Facilities as identified by the Activity Code specified under Sector O in Table D-1 of Appendix D.

8.O.2 Industrial Activities Covered by Sector O

This permit authorizes stormwater discharges from the following industrial activities at Sector O facilities:

8.O.2.1 ***Steam electric power generation using coal, natural gas, oil, nuclear energy, etc., to produce a steam source, including coal handling areas (does not include geothermal power);***

8.O.2.2 ***Coal pile runoff, including effluent limitations established by 40 CFR Part 423;***

8.O.2.3 ***Dual fuel facilities that could employ a steam boiler.***

8.O.3 Limitations on Coverage

8.O.3.1 ***Prohibition of Non-Stormwater Discharges.*** Non-stormwater discharges subject to effluent limitations guidelines are not covered by this permit. (EPA includes these prohibited non-stormwater discharges here solely as a helpful reminder to the operator that the only non-stormwater discharges authorized by this permit are at Part 1.2.2.)

8.O.3.2 ***Prohibition of Stormwater Discharges.*** Stormwater discharges from the following are not covered by this permit:

- ***8.O.3.2.1*** ***Ancillary facilities (e.g., fleet centers and substations) that are not contiguous to a steam electric power generating facility;***
- ***8.O.3.2.2*** ***Gas turbine facilities (provided the facility is not a dual-fuel facility that includes a steam boiler), and combined-cycle facilities where no supplemental fuel oil is burned (and the facility is not a dual-fuel facility that includes a steam boiler);***
- ***8.O.3.2.3*** ***Cogeneration (combined heat and power) facilities utilizing a gas turbine.***

8.O.4 **Additional Technology-Based Effluent Limits.** The following good housekeeping measures are required in addition to Part 2.1.2.2:

8.O.4.1 ***Fugitive Dust Emissions.*** Minimize fugitive dust emissions from coal handling areas to minimize the tracking of coal dust offsite that could be discharged in stormwater through implementation of control measures such as the following, where determined to be feasible, (list not exclusive): installing specially designed tires; and washing vehicles in a designated area before they leave the site and controlling the wash water.

8.O.4.2 ***Delivery Vehicles.*** Minimize contamination of stormwater from delivery vehicles arriving at the plant site. Implement procedures to inspect delivery vehicles arriving at the plant site as necessary to minimize discharges of pollutants in stormwater. Ensure the overall integrity of the body or container of the delivery vehicle and implement procedures to deal with leakage or spillage from delivery vehicles.

8.O.4.3 ***Fuel Oil Unloading Areas.*** Minimize contamination of precipitation or stormwater from fuel oil unloading areas. Use containment curbs in unloading areas where feasible. In addition, ensure personnel familiar with spill prevention and response procedures are available to respond expeditiously in the event of a leak or spill during deliveries. Ensure that any leaks or spills are immediately contained and cleaned up, and use spill and overflow protection devices (e.g., drip pans, drip diapers, or other containment devices placed beneath fuel oil connectors to contain potential spillage during deliveries or from leaks at the connectors).

8.O.4.4 ***Chemical Loading and Unloading.*** Minimize contamination of precipitation or stormwater from chemical loading and unloading areas. Use containment curbs at chemical loading and unloading areas to contain spills, where practicable. In addition, ensure personnel familiar with spill prevention and response procedures are available to respond expeditiously in the event of a leak or spill during deliveries. Ensure leaks and spills are immediately contained and cleaned up and, where practicable, load and unload in covered areas and store chemicals indoors.

8.O.4.5 ***Miscellaneous Loading and Unloading Areas.*** Minimize contamination of precipitation or stormwater from loading and unloading areas through implementation of control measures such as the following, where determined to be feasible (list not exclusive): covering the loading area; grading, curbing, or berming around the loading area to divert run-on; locating the loading and unloading equipment and vehicles so that leaks are contained in existing containment and flow diversion systems; or equivalent procedures.

8.O.4.6 ***Liquid Storage Tanks.*** Minimize contamination of stormwater from above-ground liquid storage tanks through implementation of control measures such as the following, where determined to be feasible, the following (list not exclusive): using protective guards around tanks; using containment curbs; installing spill and overflow protection; using dry cleanup methods; or equivalent measures.

8.O.4.7 ***Large Bulk Fuel Storage Tanks.*** Minimize contamination of stormwater from large bulk fuel storage tanks. Use containment berms (or their equivalent). You must also comply with applicable state and federal laws, including Spill Prevention, Control and Countermeasure (SPCC) Plan requirements.

8.O.4.8 ***Spill Reduction Measures***. Minimize the potential for an oil or chemical spill, or reference the appropriate part of your SPCC plan. Visually inspect as part of your routine facility inspection the structural integrity of all above-ground tanks, pipelines, pumps, and related equipment that may be exposed to stormwater, and make any necessary repairs immediately.

8.O.4.9 ***Oil-Bearing Equipment in Switchyards.*** Minimize contamination of stormwater from oil-bearing equipment in switchyard areas. Use level grades and gravel surfaces to retard flows and limit the spread of spills, or collect stormwater in perimeter ditches.

8.O.4.10 ***Residue-Hauling Vehicles.*** Inspect all residue-hauling vehicles for proper covering over the load, adequate gate sealing, and overall integrity of the container body. Repair vehicles without load covering or adequate gate sealing, or with leaking containers or beds.

8.O.4.11 ***Ash Loading Areas.*** Reduce or control the tracking of ash and residue from ash loading areas. Clear the ash building floor and immediately adjacent roadways of spillage, debris, and excess water as necessary to minimize discharges of pollutants in stormwater.

8.O.4.12 ***Areas Adjacent to Disposal Ponds or Landfills***. Minimize contamination of stormwater from areas adjacent to disposal ponds or landfills. Reduce ash residue that may be tracked on to access roads traveled by residue handling vehicles, and reduce ash residue on exit roads leading into and out of residue handling areas.

8.O.4.13 ***Landfills, Scrap Yards, Surface Impoundments, Open Dumps, General Refuse Sites.*** Minimize the potential for contamination of stormwater from these areas.

8.O.5 Additional SWPPP Requirements

8.O.5.1 ***Drainage Area Site Map.*** (See also Part 6.2.2) Document in your SWPPP the locations of any of the following activities or sources that may be exposed to precipitation or stormwater: storage tanks, scrap yards, and general refuse areas; short- and long-term storage of general materials (including but not limited to supplies, construction materials, paint equipment, oils, fuels, used and unused solvents, cleaning materials, paint, water treatment chemicals, fertilizer, and pesticides); landfills and construction sites; and stock pile areas (e.g., coal or limestone piles).

8.O.5.2 ***Documentation of Good Housekeeping Measures***. You must document in your SWPPP the good housekeeping measures implemented to meet the effluent limits in Part 8.O.4.

8.O.6 Additional Inspection Requirements

As part of your inspection, inspect the following areas monthly: coal handling areas, loading or unloading areas, switchyards, fueling areas, bulk storage areas, ash handling areas, areas adjacent to disposal ponds and landfills, maintenance areas, liquid storage tanks, and long term and short term material storage areas.

8.O.7 Indicator Monitoring (See also Part 4.2.1)

Table 8.O-1 identifies indicator monitoring that applies to the specific subsectors of Sector O. This indicator monitoring applies to both your primary industrial activity and any co-located industrial activities.

Table 8.O-1		
Subsector (You may be subject to requirements for more than one sector/subsector)	**Indicator Monitoring Parameter**	**Indicator Monitoring Threshold**
Applies to all Sector O (Subsector O1) facilities with stormwater discharges from paved surfaces that will be initially sealed or re-sealed with coal-tar sealcoat where industrial activities are located during coverage under this permit	Polycyclic Aromatic Hydrocarbons (PAHs)*	Report Only/ No thresholds or baseline values
Subsector O1. Steam Electric Generating Facilities, including coal handling sites (SIC Code SE)	Chemical Oxygen Demand (COD)	Report Only/ No thresholds or baseline values
	Total Suspended Solids (TSS)	Report Only/ No thresholds or baseline values
	pH	Report Only/ No thresholds or baseline values
	Polycyclic Aromatic Hydrocarbons (PAHs)*	Report Only/ No thresholds or baseline values

* Monitoring is required for the 16 individual PAHs identified at Appendix A to 40 CFR Part 423: naphthalene, acenaphthylene, acenaphthene, fluorene, phenanthrene, anthracene, fluoranthene, pyrene, benzo[a]anthracene, chrysene, benzo[b]fluoranthene, benzo[k]fluoranthene, benzo[a]pyrene, benzo[g,h,i]perylene, indeno[1,2,3-c,d]pyrene, and dibenz[a,h]anthracene.

8.O.8 Effluent Limitations Based on Effluent Limitations Guidelines (See also Part 4.2.3.1)

Table 8.O-2 identifies effluent limits that apply to the industrial activities described below. Compliance with these effluent limits is to be determined based on discharges from these industrial activities independent of commingling with any other waste streams that may be covered under this permit.

Table 8.O-2[1]		
Industrial Activity	**Parameter**	**Effluent Limitation**
Discharges from coal storage piles at Steam Electric Generating Facilities	TSS	50 mg/l[2]
	pH	6.0 min - 9.0 max

[1] Monitor annually.

[2] If your facility is designed, constructed, and operated to treat the volume of coal pile runoff that is associated with a 10-year, 24-hour rainfall event, any untreated overflow of coal pile runoff from the treatment unit is not subject to the 50 mg/L limitation for total suspended solids.

Part 8 – Sector-Specific Requirements for Industrial Activity

Subpart P – Sector P – Land Transportation and Warehousing

You must comply with Part 8 sector-specific requirements associated with your primary industrial activity and any co-located industrial activities, as defined in Appendix A. The sector- specific requirements apply to those areas of your facility where those sector-specific activities occur. These sector-specific requirements are in addition to any requirements specified elsewhere in this permit.

8.P.1 Covered Stormwater Discharges

The requirements in Subpart P apply to stormwater discharges associated with industrial activity from Land Transportation and Warehousing facilities as identified by the SIC Codes specified under Sector P in Table D-1 of Appendix D of the permit.

8.P.2 Limitation on Coverage

8.P.2.1 ***Prohibited Discharges*** (see also Parts 1.1.3 and 8.P.3.1.4) This permit does not authorize the discharge of vehicle/equipment/surface wash water, including tank cleaning operations. Such discharges must be authorized under a separate NPDES permit, discharged to a sanitary sewer in accordance with applicable industrial pretreatment requirements, or recycled on-site.

8.P.3 Additional Technology-Based Effluent Limits

8.P.3.1 ***Good Housekeeping Measures.*** (See also Part 2.1.2.2) In addition to the Good Housekeeping requirements in Part 2.1.2.2, you must do the following.

8.P.3.1.1 ***Vehicle and Equipment Storage Areas***. Minimize the potential for stormwater exposure to leaky or leak-prone vehicles/equipment awaiting maintenance through implementation of control measures such as the following, where determined to be feasible (list not exclusive): using of drip pans under vehicles/equipment; storing vehicles and equipment indoors; installing berms or dikes; using of absorbents; roofing or covering storage areas; and cleaning pavement surfaces to remove oil and grease.

8.P.3.1.2 ***Fueling Areas.*** Minimize contamination of stormwater from fueling areas through implementation of control measures such as the following, where determined to be feasible: covering the fueling area; using spill/overflow protection and cleanup equipment; minimizing stormwater run-on/discharges to the fueling area; using dry cleanup methods; and treating and/or recycling collected stormwater.

8.P.3.1.3 ***Material Storage Areas***. Maintain all material storage vessels (e.g., for used oil/oil filters, spent solvents, paint wastes, hydraulic fluids) to prevent contamination of stormwater and plainly label them (e.g., "Used Oil," "Spent Solvents"). To minimize discharges of pollutants in stormwater from material storage areas, implement control measures such as the following, where determined to be feasible (list not exclusive): storing the materials indoors; installing berms/dikes around the areas; minimizing discharges of stormwater to the areas; using dry cleanup methods; and treating and/or recycling collected stormwater.

8.P.3.1.4 ***Vehicle and Equipment Cleaning Areas.*** Minimize contamination of stormwater from all areas used for vehicle/equipment cleaning through implementation of control measures such as the following, where determined to be feasible (list not exclusive): performing all cleaning operations indoors; covering the cleaning operation, ensuring that all wash water drains to a proper collection system (i.e., not the stormwater drainage system); treating and/or recycling collected wash water; or other equivalent measures.

Discharges of vehicle and equipment wash water, including tank cleaning operations, are not authorized by this permit for this sector.

8.P.3.1.5 ***Vehicle and Equipment Maintenance Areas.*** Minimize contamination of stormwater from all areas used for vehicle/equipment maintenance through implementation of control measures such as the following, where determined to be feasible (list not exclusive): performing maintenance activities indoors; using drip pans; keeping an organized inventory of materials used in the shop; draining all parts of fluid prior to disposal; prohibiting wet clean up practices if these practices would result in the discharge of pollutants to stormwater drainage systems; using dry cleanup methods; treating and/or recycling collected stormwater; and minimizing run on/discharges of stormwater to maintenance areas.

8.P.3.1.6 ***Locomotive Sanding (Loading Sand for Traction)*** Areas. Minimize discharges of pollutants in stormwater from locomotive sanding areas through implementation of control measures such as the following, where determined to be feasible (list not exclusive): covering sanding areas; minimizing stormwater run on/discharges; or appropriate sediment removal practices to minimize the offsite transport of sanding material by stormwater.

8.P.3.2 ***Employee Training.*** (See also Part 2.1.2.8) Train personnel at least once a year and address the following activities, as applicable: used oil and spent solvent management; fueling procedures; general good housekeeping practices; proper painting procedures; and used battery management.

8.P.4 Additional SWPPP Requirements

8.P.4.1 ***Drainage Area Site Map.*** (See also Part 6.2.2) Identify in the SWPPP the following areas of the facility and indicate whether activities occurring there may be exposed to precipitation/stormwater: fueling stations; vehicle/equipment maintenance or cleaning areas; storage areas for vehicle/equipment with actual or potential fluid leaks; loading/unloading areas; areas where treatment, storage or disposal of wastes occur; liquid storage tanks; processing areas; and storage areas.

8.P.4.2 ***Potential Pollutant Sources.*** (See also Part 6.2.3) Assess the potential for the following activities and facility areas to contribute pollutants to stormwater discharges: onsite waste storage or disposal; dirt/gravel parking areas for vehicles awaiting maintenance; illicit plumbing connections between shop floor drains and the stormwater conveyance system(s); and fueling areas. Describe these activities in the SWPPP.

8.P.4.2.1 ***Description of Good Housekeeping Measures.*** You must document in your SWPPP the good housekeeping measures you implement consistent with Part 8.P.3.

8.P.4.2.2 ***Vehicle and Equipment Wash Water Requirements.*** If wash water is handled in a manner that does not involve separate NPDES permitting (e.g., hauled offsite), describe the disposal method and include all pertinent information (e.g., frequency, volume, destination, etc.) in your SWPPP. Discharges of vehicle and equipment wash water, including tank cleaning operations, are not authorized by this permit for this sector.

8.P.5 Additional Inspection Requirements (See also Part 3.1)

Inspect all the following areas/activities: storage areas for vehicles/equipment awaiting maintenance, fueling areas, indoor and outdoor vehicle/equipment maintenance areas, material storage areas, vehicle/equipment cleaning areas and loading/unloading areas.

8.P.6 Indicator Monitoring (See also Part 4.2.1)

Table 8.P-1 identifies indicator monitoring that applies to the specific subsectors of Sector P. This indicator monitoring applies to both your primary industrial activity and any co-located industrial activities.

Table 8.P-1

Subsector (You may be subject to requirements for more than one sector/subsector)	Indicator Monitoring Parameter	Indicator Monitoring Threshold
Applies to all Sector P (Subsector P1) facilities with stormwater discharges from paved surfaces that will be initially sealed or re-sealed with coal-tar sealcoat where industrial activities are located during coverage under this permit	Polycyclic Aromatic Hydrocarbons (PAHs)*	Report Only/ No thresholds or baseline values
Subsector P1. Railroad Transportation (SIC Code 4011, 4013); Local and Highway Passenger Transportation (SIC Code 4111-4173); Motor Freight Transportation and Warehousing (SIC Code 4212-4231); United States Postal Service (SIC Code 4311); Petroleum Bulk Stations and Terminals (SIC Code 5171)	Chemical Oxygen Demand (COD)	Report Only/ No thresholds or baseline values
	Total Suspended Solids (TSS)	Report Only/ No thresholds or baseline values
	pH	Report Only/ No thresholds or baseline values
Subsector P1. Railroad Transportation (SIC Code 4011, 4013); Petroleum Bulk Stations and Terminals (SIC Code 5171)	Polycyclic Aromatic Hydrocarbons (PAHs)*	Report Only/ No thresholds or baseline values

* Monitoring is required for the 16 individual PAHs identified at Appendix A to 40 CFR Part 423: naphthalene, acenaphthylene, acenaphthene, fluorene, phenanthrene, anthracene, fluoranthene, pyrene, benzo[a]anthracene, chrysene, benzo[b]fluoranthene, benzo[k]fluoranthene, benzo[a]pyrene, benzo[g,h,i]perylene, indeno[1,2,3-c,d]pyrene, and dibenz[a,h]anthracene.

Part 8 – Sector-Specific Requirements for Industrial Activity

Subpart Q – Sector Q – Water Transportation

You must comply with Part 8 sector-specific requirements associated with your primary industrial activity and any co-located industrial activities, as defined in Appendix A. The sector- specific requirements apply to those areas of your facility where those sector-specific activities occur. These sector-specific requirements are in addition to any requirements specified elsewhere in this permit.

8.Q.1 Covered Stormwater Discharges

The requirements in Subpart Q apply to stormwater discharges associated with industrial activity from Water Transportation facilities as identified by the SIC Codes specified under Sector Q in Table D-1 of Appendix D of the permit.

8.Q.2 Limitations on Coverage

8.Q.2.1 ***Prohibition of Non-Stormwater Discharges.*** (See also Part 1.1.3) The following are not authorized by this permit: discharges from vessels including bilge and ballast water, sanitary wastes, pressure wash water, and cooling water. Any discharge of pollutants from a point source to a water of the U.S. requires coverage under an NPDES permit. (EPA includes these prohibited non-stormwater discharges here solely as a helpful reminder to the operator that the only non-stormwater discharges authorized by this permit are at Part 1.2.2.)

8.Q.3 Additional Technology-Based Effluent Limits

8.Q.3.1 ***Good Housekeeping Measures.*** You must implement the following good housekeeping measures in addition to the requirements of Part 2.1.2.2:

8.Q.3.1.1 ***Pressure Washing Area***. If pressure washing is used to remove marine growth from vessels, the discharge water must be permitted by a separate NPDES permit. Collect or contain the discharges from the pressure washing area so that they are not commingled with stormwater discharges authorized by this permit.

8.Q.3.1.2 ***Blasting and Painting Area***. Minimize the potential for spent abrasives, paint chips, and overspray to be discharged into receiving waters or the storm sewer system. Contain all blasting and painting activities, or use other measures, to minimize the discharge of contaminants (e.g., hanging plastic barriers or tarpaulins during blasting or painting operations to contain debris). At least once per month, you must clean stormwater conveyances of deposits of abrasive blasting debris and paint chips.

8.Q.3.1.3 ***Material Storage Areas.*** Store and plainly label all containerized materials (e.g., fuels, paints, solvents, waste oil, antifreeze, batteries) in a protected, secure location away from drains. Minimize the contamination of precipitation or stormwater from the storage areas. Specify which materials are stored indoors, and contain or enclose or use other measures for those stored outdoors. If abrasive blasting is performed, discuss the storage and disposal of spent abrasive materials generated at the facility. Implement an inventory control plan to limit the presence of potentially hazardous materials onsite.

8.Q.3.1.4 ***Engine Maintenance and Repair Areas.*** Minimize the contamination of precipitation or stormwater from all areas used for engine maintenance and repair through implementation of control measures such as the following, where determined to be feasible (list not exclusive): performing all maintenance activities indoors; maintaining an organized inventory of materials used in the shop; draining all parts of fluid prior to disposal; prohibiting the practice of hosing down the shop floor; using dry cleanup methods; and treating and/or recycling stormwater collected from the maintenance area.

8.Q.3.1.5 ***Material Handling Area.*** Minimize the contamination of precipitation or stormwater from material handling operations and areas (e.g., fueling, paint and solvent mixing, disposal of process wastewater streams from vessels) through implementation of control measures such as the following, where determined to be feasible (list not exclusive): covering fueling areas; using spill and overflow protection; mixing paints and solvents in a designated area (preferably indoors or under a shed); and minimizing discharges of stormwater to material handling areas.

8.Q.3.1.6 ***Drydock Activities.*** Routinely maintain and clean the drydock to minimize discharges of pollutants in stormwater. Address the cleaning of accessible areas of the drydock prior to flooding, and final cleanup following removal of the vessel and raising the dock. Include procedures for cleaning up oil, grease, and fuel spills occurring on the drydock. To minimize discharges of pollutants in stormwater from drydock activities, implement control measures such as the following, where determined to be feasible (list not exclusive): sweeping rather than hosing off debris and spent blasting material from accessible areas of the drydock prior to flooding; and making absorbent materials and oil containment booms readily available to clean up or contain any spills.

8.Q.3.2 ***Employee Training.*** (See also Part 2.1.2.8) As part of your employee training program, address, at a minimum, the following activities (as applicable): used oil management; spent solvent management; disposal of spent abrasives; disposal of vessel wastewaters; spill prevention and control; fueling procedures; general good housekeeping practices; painting and blasting procedures; and used battery management.

8.Q.3.3 ***Preventive Maintenance***. (See also Part 2.1.2.3) As part of your preventive maintenance program, perform timely inspection and maintenance of stormwater management devices (e.g., cleaning oil and water separators and sediment traps to ensure that spent abrasives, paint chips, and solids will be intercepted and retained prior to entering the storm drainage system), as well as inspecting and testing facility equipment and systems to uncover conditions that could cause breakdowns or failures resulting in discharges of pollutants to surface waters.

8.Q.4 Additional SWPPP Requirements

8.Q.4.1 ***Drainage Area Site Map***. (See also Part 6.2.2) Document in your SWPPP where any of the following may be exposed to precipitation or stormwater: fueling; engine maintenance and repair; vessel maintenance and repair; pressure washing; painting; sanding; blasting; welding; metal fabrication; loading and unloading areas; locations used for the treatment, storage, or disposal of wastes; liquid storage tanks; liquid storage areas (e.g., paint, solvents, resins); and material storage areas (e.g., blasting media, aluminum, steel, scrap iron).

8.Q.4.2 ***Summary of Potential Pollutant Sources.*** (See also Part 6.2.3) Document in the SWPPP the following additional sources and activities that have potential pollutants associated with them: outdoor manufacturing or processing activities (e.g., welding, metal fabricating) and significant dust or particulate generating processes (e.g., abrasive blasting, sanding, and painting).

8.Q.5 Additional Inspection Requirements (See also Part 3.1)

Include the following in all quarterly routine facility inspections: pressure washing areas; blasting, sanding, and painting areas; material storage areas; engine maintenance and repair areas; material handling areas; drydock area; and general yard area.

8.Q.6 Indicator Monitoring (See also Part 4.2.1)

Table 8.Q-1 identifies indicator monitoring that applies to the specific subsectors of Sector Q. This indicator monitoring applies to both your primary industrial activity and any co-located industrial activities.

Table 8.Q-1

Subsector (You may be subject to requirements for more than one sector/subsector)	Indicator Monitoring Parameter	Indicator Monitoring Threshold
Applies to all Sector Q (Subsector Q1) facilities with stormwater discharges from paved surfaces that will be initially sealed or re-sealed with coal-tar sealcoat where industrial activities are located during coverage under this permit	Polycyclic Aromatic Hydrocarbons (PAHs)*	Report Only/ No thresholds or baseline values
Subsector Q1. Water Transportation Facilities (SIC Code 4491 only)	Polycyclic Aromatic Hydrocarbons (PAHs)*	Report Only/ No thresholds or baseline values

* Monitoring is required for the 16 individual PAHs identified at Appendix A to 40 CFR Part 423: naphthalene, acenaphthylene, acenaphthene, fluorene, phenanthrene, anthracene, fluoranthene, pyrene, benzo[a]anthracene, chrysene, benzo[b]fluoranthene, benzo[k]fluoranthene, benzo[a]pyrene, benzo[g,h,i]perylene, indeno[1,2,3-c,d]pyrene, and dibenz[a,h]anthracene.

8.Q.7 Sector-Specific Benchmarks (See also Part 4.2.2)

Table 8.Q-2 identifies benchmarks that apply to Sector Q. These benchmarks apply to both your primary industrial activity and any co-located industrial activities.

Table 8.Q-2.

Subsector (You may be subject to requirements for more than one sector/subsector)	Parameter	Benchmark Monitoring Concentration
Subsector Q1. Water Transportation Facilities (SIC 4412-4499)	Total Recoverable Aluminum	1,100 µg/L
	Total Recoverable Lead (freshwater)[2]	Hardness Dependent
	Total Recoverable Lead (saltwater)[1]	210 µg/L
	Total Recoverable Zinc	Hardness

Table 8.Q-2.		
Subsector (You may be subject to requirements for more than one sector/subsector)	**Parameter**	**Benchmark Monitoring Concentration**
	(freshwater)[2] Total Recoverable Zinc (saltwater)[1]	Dependent 90 µg/L

[1]Saltwater benchmark values apply to stormwater discharges into saline waters where indicated.

[2] The freshwater benchmark values of some metals are dependent on water hardness. For these parameters, permittees must determine the hardness of the receiving water (see Appendix J, "Calculating Hardness in Receiving Waters for Hardness Dependent Metals," for methodology), in accordance with Part 4.2.2.1, to identify the applicable 'hardness range' for determining their benchmark value applicable to their facility. Hardness Dependent Benchmarks follow in the table below:

Freshwater Hardness Range	**Lead** (µg/L)	**Zinc** (µg/L)
0-24.99 mg/L	14	37
25-49.99 mg/L	24	52
50-74.99 mg/L	45	80
75-99.99 mg/L	69	107
100-124.99 mg/L	95	132
125-149.99 mg/L	123	157
150-174.99 mg/L	152	181
175-199.99 mg/L	182	204
200-224.99 mg/L	213	227
225-249.99 mg/L	246	249
250+ mg/L	262	260

Part 8 – Sector-Specific Requirements for Industrial Activity

Subpart R – Sector R – Ship and Boat Building and Repair Yards

You must comply with Part 8 sector-specific requirements associated with your primary industrial activity and any co-located industrial activities, as defined in Appendix A. The sector- specific requirements apply to those areas of your facility where those sector-specific activities occur. These sector-specific requirements are in addition to any requirements specified elsewhere in this permit.

8.R.1 Covered Stormwater Discharges

The requirements in Subpart R apply to stormwater discharges associated with industrial activity from Ship and Boat Building and Repair Yards as identified by the SIC Codes specified under Sector R in Table D-1 of Appendix D of the permit.

8.R.2 Limitations on Coverage

8.R.2.1 Prohibition of Non-Stormwater Discharges. (See also Part 1.1.3) The following are not authorized by this permit: discharges from vessels including bilge and ballast water, sanitary wastes, pressure wash water, and cooling water. (EPA includes these prohibited non- stormwater discharges here solely as a helpful reminder to the operator that the only non-stormwater discharges authorized by this permit are at Part 1.2.2.)

8.R.3 Additional Technology-Based Effluent Limits

8.R.3.1 Good Housekeeping Measures. (See also Part 2.1.2.2)

8.R.3.1.1 ***Pressure Washing Area***. If pressure washing is used to remove marine growth from vessels, the discharged water must be permitted as a process wastewater by a separate NPDES permit.

8.R.3.1.2 ***Blasting and Painting Area.*** Minimize the potential for spent abrasives, paint chips, and overspray to be discharged into receiving waters or the storm sewer system. Contain all blasting and painting activities, or use other measures, to prevent the discharge of the contaminants (e.g., hanging plastic barriers or tarpaulins during blasting or painting operations to contain debris). When necessary, regularly clean stormwater conveyances of deposits of abrasive blasting debris and paint chips.

8.R.3.1.3 ***Material Storage Areas.*** Store and plainly label all containerized materials (e.g., fuels, paints, solvents, waste oil, antifreeze, batteries) in a protected, secure location away from drains. Minimize the contamination of precipitation or stormwater from the storage areas. If abrasive blasting is performed, discuss the storage and disposal of spent abrasive materials generated at the facility. Implement an inventory control plan to limit the presence of potentially hazardous materials onsite.

8.R.3.1.4 ***Engine Maintenance and Repair Areas.*** Minimize the contamination of precipitation or stormwater from all areas used for engine maintenance and repair through implementation of control measures such as the following, where determined to be feasible (list not exclusive): performing all maintenance activities indoors; maintaining an organized inventory of materials used in the shop; draining all parts of fluid prior to disposal; prohibiting the practice of hosing down the shop floor; using dry cleanup methods; and treating and/or recycling stormwater collected from the maintenance area.

8.R.3.1.5 ***Material Handling Area***. Minimize the discharge of pollutants in stormwater from material handling operations and areas (e.g., fueling, paint and solvent mixing, disposal of process wastewater streams from vessels) through implementation of control measures such as the following, where determined to be feasible (list not exclusive): covering fueling areas, using spill and overflow protection, mixing paints and solvents in a designated area (preferably indoors or under a shed), and minimizing stormwater run-on to material handling areas.

8.R.3.1.6 ***Drydock Activities.*** Routinely maintain and clean the drydock to minimize pollutants in stormwater. Clean accessible areas of the drydock prior to flooding and final cleanup following removal of the vessel and raising the dock. Include procedures for cleaning up oil, grease, or fuel spills occurring on the drydock. To minimize discharges of pollutants in stormwater from drydock activities, implement control measures such as the following, where determined to be feasible (list not exclusive): sweeping rather than hosing off debris and spent blasting material from accessible areas of the drydock prior to flooding; and having absorbent materials and oil containment booms readily available to clean up and contain any spills.

8.R.3.2 ***Employee Training.*** (See also Part 2.1.2.8) As part of your employee training program, address, at a minimum, the following activities (as applicable): used oil management, spent solvent management, disposal of spent abrasives, disposal of vessel wastewaters, spill prevention and control, fueling procedures, general good housekeeping practices, painting and blasting procedures, and used battery management.

8.R.3.3 ***Preventive Maintenance.*** (See also Part 2.1.2.3) As part of your preventive maintenance program, perform timely inspection and maintenance of stormwater management devices (e.g., cleaning oil and water separators and sediment traps to ensure that spent abrasives, paint chips, and solids will be intercepted and retained prior to entering the storm drainage system), as well as inspecting and testing facility equipment and systems to uncover conditions that could cause breakdowns or failures resulting in discharges of pollutants to surface waters.

8.R.4 Additional SWPPP Requirements

8.R.4.1 ***Drainage Area Site Map***. (See also Part 6.2.2) Document in your SWPPP where any of the following may be exposed to precipitation or stormwater: fueling; engine maintenance or repair; vessel maintenance or repair; pressure washing; painting; sanding; blasting; welding; metal fabrication; loading and unloading areas; treatment, storage, and waste disposal areas; liquid storage tanks; liquid storage areas (e.g., paint, solvents, resins); and material storage areas (e.g., blasting media, aluminum, steel, scrap iron).

8.R.4.2 ***Potential Pollutant Sources.*** (See also Part 6.2.3) Document in your SWPPP the following additional sources and activities that have potential pollutants associated with them (if applicable): outdoor manufacturing or processing activities (e.g., welding, metal fabricating) and significant dust or particulate generating processes (e.g., abrasive blasting, sanding, and painting).

8.R.4.3 ***Documentation of Good Housekeeping Measures.*** Document in your SWPPP any good housekeeping measures implemented to meet the effluent limits in Part8.R.3.

8.R.4.3.1 ***Blasting and Painting Areas.*** Document in the SWPPP any standard operating practices relating to blasting and painting (e.g., prohibiting uncontained blasting and painting over open water or prohibiting blasting and painting during windy conditions, which can render containment ineffective).

8.R.4.3.2 ***Storage Areas.*** Specify in your SWPPP which materials are stored indoors, and contain or enclose or use other measures for those stored outdoors.

8.R.5 Additional Inspection Requirements (See also Part 3.1)

Include the following in all quarterly routine facility inspections: pressure washing areas; blasting, sanding, and painting areas; material storage areas; engine maintenance and repair areas; material handling areas; drydock area; and general yard area.

8.R.6 Indicator Monitoring (See also Part 4.2.1)

Table 8.R-1 identifies indicator monitoring that applies to the specific subsectors of Sector R. This indicator monitoring applies to both your primary industrial activity and any co-located industrial activities.

Table 8.R-1

Subsector (You may be subject to requirements for more than one sector/subsector)	Indicator Monitoring Parameter	Indicator Monitoring Threshold
Applies to all Sector R (Subsector R1) facilities with stormwater discharges from paved surfaces that will be initially sealed or re-sealed with coal-tar sealcoat where industrial activities are located during coverage under this permit	Polycyclic Aromatic Hydrocarbons (PAHs)*	Report Only/ No thresholds or baseline values
Subsector R1. Ship and Boat Building or Repairing Yards (SIC Code 3731, 3732)	Chemical Oxygen Demand (COD)	Report Only/ No thresholds or baseline values
	Total Suspended Solids (TSS)	Report Only/ No thresholds or baseline values
	pH	Report Only/ No thresholds or baseline values
	Polycyclic Aromatic Hydrocarbons (PAHs)*	Report Only/ No thresholds or baseline values

* Monitoring is required for the 16 individual PAHs identified at Appendix A to 40 CFR Part 423: naphthalene, acenaphthylene, acenaphthene, fluorene, phenanthrene, anthracene, fluoranthene, pyrene, benzo[a]anthracene, chrysene, benzo[b]fluoranthene, benzo[k]fluoranthene, benzo[a]pyrene, benzo[g,h,i]perylene, indeno[1,2,3-c,d]pyrene, and dibenz[a,h]anthracene.

Part 8 – Sector-Specific Requirements for Industrial Activity

Subpart S – Sector S – Air Transportation

You must comply with Part 8 sector-specific requirements associated with your primary industrial activity and any co-located industrial activities, as defined in Appendix A. The sector- specific requirements apply to those areas of your facility where those sector-specific activities occur. These sector-specific requirements are in addition to any requirements specified elsewhere in this permit.

8.S.1 Covered Stormwater Discharges

The requirements in Subpart S apply to stormwater discharges associated with industrial activity from Air Transportation facilities identified by the SIC Codes specified under Sector S in Table D-1 of Appendix D of the permit.

8.S.2 Limitation on Coverage

8.S.2.1 ***Limitations on Coverage.*** This permit authorizes stormwater discharges from only those portions of the air transportation facility that are involved in vehicle maintenance (including vehicle rehabilitation, mechanical repairs, painting, fueling and lubrication), equipment cleaning operations or deicing operations.

Note: the term "deicing" in this permit will generally be used to mean both deicing (removing frost, snow or ice) and anti-icing (preventing accumulation of frost, snow or ice) activities, unless specific mention is made otherwise.

8.S.2.2 ***Prohibition of Non-Stormwater Discharges***. (See also Part 1.1.3 and Part 8.S.5.3) This permit does not authorize the discharge of aircraft, ground vehicle, runway and equipment wash waters; nor the dry weather discharge of deicing chemicals. Such discharges must be covered by separate NPDES permit(s). Note that a discharge resulting from snowmelt is not a dry weather discharge. (EPA includes these prohibited non-stormwater discharges here solely as a helpful reminder to the operator that the only non-stormwater discharges authorized by this permit are at Part 1.2.2.)

8.S.3 Multiple Operators at Air Transportation Facilities

Air transportation facilities often have more than one operator who could discharge stormwater associated with industrial activity. Operators include the airport authority and airport tenants, including air passenger or cargo companies, fixed based operators, and other parties who routinely perform industrial activities on airport property.

8.S.3.1 ***Permit Coverage/Submittal of NOIs***. Where an airport transportation facility has multiple industrial operators that discharge stormwater, each individual operator must obtain coverage under an NPDES stormwater permit. To obtain coverage under the MSGP, all such operators must meet the eligibility requirements in Part 1 and must submit an NOI, per Part 1.3.2. (or, if appropriate, a no exposure certification per Part 1.5).

8.S.3.2 ***MSGP Implementation Responsibilities for Airport Authority and Tenants***. The airport authority, in collaboration with its tenants, may choose to implement certain MSGP requirements on behalf of its tenants in order to increase efficiency and eliminate redundancy or duplication of effort. Options available to the airport authority and its tenants for implementation of MSGP requirements include:

- The airport authority performs certain activities on behalf of itself and its tenants and reports on its activities;
- Tenants provide the airport authority with relevant inputs about tenants' activities, including deicing chemical usage*, and the airport authority compiles and reports on tenants' and its own activities;
- Tenants independently perform, document and submit required information on their activities.

*Tenants who report their deicing chemical usage to the airport authority and rely on the airport authority to perform monitoring should not check the glycol and urea use box on their NOI forms.

8.S.3.3 ***SWPPP Requirements***. A single comprehensive SWPPP must be developed for all stormwater discharges associated with industrial activity at the airport before submittal of any NOIs. The comprehensive SWPPP should be developed collaboratively by the airport authority and tenants. If any operator develops a SWPPP for discharges from its own areas of the airport, that SWPPP must be coordinated and integrated with the comprehensive SWPPP. All operators and their separate SWPPP contributions and compliance responsibilities must be clearly identified in the comprehensive SWPPP, which all operators must sign and certify per Part 6.2.7. As applicable, the SWPPP must clearly specify the MSGP requirements to be complied with by:

- The airport authority for itself;
- The airport authority on behalf of its tenants;
- Tenants for themselves.

For each activity that an operator (e.g., the airport authority) conducts on behalf of another operator (e.g., a tenant), the SWPPP must describe a process for reporting results to the latter operator and for ensuring appropriate follow-up, if necessary, by all affected operators. This is to ensure all actions are taken to correct any potential deficiencies or permit violations. For example, where the airport authority is conducting monitoring for itself and its tenants, the SWPPP must identify how the airport authority will share the monitoring results with its tenants, and then follow-up with its tenants where there are any exceedances of benchmarks, effluent limits, or water quality standards. In turn, the SWPPP must describe how the tenants will also follow-up to ensure permit compliance.

8.S.3.4 ***Duty to Comply.*** All individual operators are responsible for implementing their assigned portion of the comprehensive SWPPP, and operators must ensure that their individual activities do not render another operator's stormwater controls ineffective. In addition, the standard permit conditions found in Appendix B apply to each individual operator, including B.1 Duty to Comply (which states, in part, "You [each individual operator] must comply with all conditions of this permit."). For multiple operators at an airport this means that each individual operator remains responsible for ensuring all requirements of its own MSGP coverage are met regardless of whether the comprehensive SWPPP allocates the actual implementation of any of those responsibilities to another entity. That is, the failure of the entity allocated responsibility in the SWPPP to implement an MSGP requirement on behalf of other operators does not negate the other operators' ultimate liability.

8.S.4 Additional Technology-Based Effluent Limits

8.S.4.1 *Good Housekeeping Measures.* (See also Part 2.1.2.2)

8.S.4.1.1 ***Aircraft, Ground Vehicle and Equipment Maintenance Areas***. Minimize the contamination of stormwater from all areas used for aircraft, ground vehicle and equipment maintenance (including the maintenance conducted on the terminal apron and in dedicated hangers) through implementation of control measures such as the following, where determined to be feasible and that accommodate considerations of safety, space, operational constraints, and flight considerations (list not exclusive): performing maintenance activities indoors; maintaining an organized inventory of material used in the maintenance areas; draining all parts of fluids prior to disposal; prohibiting the practice of hosing down the apron or hanger floor; using dry cleanup methods; and collecting the stormwater from the maintenance area and providing treatment or recycling.

8.S.4.1.2 ***Aircraft, Ground Vehicle and Equipment Cleaning Areas.*** Clearly demarcate these areas on the ground using signage or other appropriate means. Minimize the contamination of stormwater from cleaning areas.

8.S.4.1.3 ***Aircraft, Ground Vehicle and Equipment Storage Areas.*** Store all aircraft, ground vehicles and equipment awaiting maintenance in designated areas only and implement control measures to minimize the discharge of pollutants in stormwater from these storage areas such as the following, where determined to be feasible and that accommodate considerations of safety, space, operational constraints, and flight considerations (list not exclusive): storing aircraft and ground vehicles indoors; using drip pans for the collection of fluid leaks; and perimeter drains, dikes or berms surrounding the storage areas.

8.S.4.1.4 ***Material Storage Areas.*** Maintain the vessels of stored materials (e.g., used oils, hydraulic fluids, spent solvents, and waste aircraft fuel) in good condition to prevent or minimize contamination of stormwater. Also plainly label the vessels (e.g., "used oil," "Contaminated Jet A"). To minimize contamination of precipitation/stormwater from these areas, implement control measures such as the following, where determined to be feasible and that accommodate considerations of safety, space, operational constraints, and flight considerations (list not exclusive): storing materials indoors; storing waste materials in a centralized location; and installing berms/dikes around storage areas.

8.S.4.1.5 ***Airport Fuel System and Fueling Areas.*** Minimize the discharge of pollutants in stormwater from airport fuel system and fueling areas through implementation of control measures such as the following, where determined to be feasible and that accommodate considerations of safety, space, operational constraints, and flight considerations (list not exclusive): implementing spill and overflow practices (e.g., placing absorptive materials beneath aircraft during fueling operations); using only dry cleanup methods; and collecting stormwater. If you have implemented a SPCC plan developed in accordance with the 2006 amendments to the SPCC rule, you may cite the relevant aspects from your SPCC plan that comply with the requirements of this section in your SWPPP.

8.S.4.1.6 ***Source Reduction.*** Consistent with safety considerations, minimize the use of urea and glycol-based deicing chemicals to reduce the aggregate amount of deicing chemicals used that could add pollutants to stormwater discharges.

- ***Runway Deicing Operations.*** To minimize the discharge of pollutants in stormwater from runway deicing operations, implement source reduction control measures such as the following, where determined to be feasible and that accommodate considerations of safety, space, operational constraints, and flight considerations (list not exclusive): metered application of chemicals; pre-wetting dry chemical constituents prior to application; installing a runway ice detection system; implementing anti-icing operations as a preventive measure against ice buildup; heating sand; and product substitution. Chemical options to replace pavement deicers (urea or glycol) include (list not exclusive): potassium acetate; magnesium acetate; calcium acetate; and anhydrous sodium acetate.
- ***Aircraft Deicing Operations.*** Minimize the discharge of pollutants in stormwater from aircraft deicing operations. Determine whether excessive application of deicing chemicals occurs and adjust as necessary, consistent with considerations of flight safety. Determine whether alternatives to glycol and whether containment measures for applied chemicals are feasible. Implement control measures for reducing deicing fluid such as the following, where determined to be feasible and that accommodate considerations of safety, space, operational constraints, and flight considerations (list not exclusive): forced-air deicing systems, computer-controlled fixed-gantry systems, infrared technology, hot water, varying glycol content to air temperature, enclosed-basket deicing trucks, mechanical methods, solar radiation, hangar storage, aircraft covers, and thermal blankets for MD-80s and DC-9s. Consider using ice- detection systems and airport traffic flow strategies and departure slot allocation systems where feasible and that accommodate considerations of safety, space, operational constraints, and flight considerations. The evaluations and determinations required by this Part should be carried out by the personnel most familiar with the particular aircraft and flight operations and related systems in question (versus an outside entity such as the airport authority).

8.S.4.1.7 ***Management of Stormwater***. (See also Part 2.1.2.6) Minimize the discharge of pollutants in stormwater from deicing chemicals in stormwater. To minimize discharges of pollutants in stormwater from aircraft deicing, implement stormwater control measures such as the following, where determined to be feasible and that accommodate considerations of safety, space, operational constraints, and flight considerations (list not exclusive): installing a centralized deicing pad to recover deicing fluid following application; plug- and-pump (PnP); using vacuum/collection trucks (glycol recovery vehicles); storing contaminated stormwater/deicing fluids in tanks; recycling collected deicing fluid where feasible; releasing controlled amounts to a publicly owned treatment works; separation of contaminated snow; conveying contaminated stormwater into an impoundment for biochemical decomposition (be aware of attracting wildlife that may prove hazardous to flight operations); and directing stormwater into vegetative swales or other infiltration measures. To minimize discharges of pollutants in stormwater from runway deicing, implement stormwater control measures such as the following, where determined to be feasible and that accommodate considerations of safety, space, operational constraints, and flight considerations (list not exclusive): mechanical systems (snow plows, brushes); conveying contaminated stormwater into swales and/or an impoundment; and pollution prevention practices such as ice detection systems, and airfield prewetting.

When applying deicing fluids during non-precipitation events (also referred to as "clear ice deicing"), implement control measures to prevent unauthorized discharge of pollutants (dry-weather discharges of pollutants would need coverage under an NPDES wastewater permit), or to minimize the discharge of pollutants from deicing fluids in later stormwater discharges, implement control measures such as the following, where determined to be feasible and that accommodate considerations safety, space, operational constraints, and flight considerations (list not exclusive): recovering deicing fluids; preventing the fluids from entering storm sewers or other stormwater discharge conveyances (e.g., covering storm sewer inlets, using booms, installing absorptive interceptors in the drains); releasing controlled amounts to a publicly owned treatment works Used deicing fluid should be recycled whenever practicable.

8.S.4.1.8 ***Deicing Season***. You must determine the seasonal timeframe (e.g., December- February, October - March) during which deicing activities typically occur at the facility. Implementation of control measures, including any BMPs, facility inspections and monitoring must be conducted with particular emphasis throughout the defined deicing season. If you meet the deicing chemical usage thresholds of 100,000 gallons glycol and/or 100 tons of urea, the deicing season you identified is the timeframe during which you must obtain the four required benchmark monitoring event results for deicing-related parameters, i.e., BOD, COD, ammonia and pH. See also Part8.S.8.

8.S.5 Additional SWPPP Requirements

8.S.5.1 ***Drainage Area Site Map.*** (See also Part 6.2.2) Document in the SWPPP the following areas of the facility and indicate whether activities occurring there may be exposed to precipitation/stormwater: aircraft and runway deicing operations; fueling stations; aircraft, ground vehicle and equipment maintenance/cleaning areas; and storage areas for aircraft, ground vehicles and equipment awaiting maintenance.

8.S.5.2 ***Potential Pollutant Sources.*** (See also Part 6.2.3) In the inventory of exposed materials, describe in the SWPPP the potential for the following activities and facility areas to contribute pollutants to stormwater discharges: aircraft, runway, ground vehicle and equipment maintenance and cleaning; and aircraft and runway deicing operations (including apron and centralized aircraft deicing stations, runways, taxiways and ramps). If deicing chemicals are used, a record of the types (including the Safety Data Sheets [SDS]) used and the monthly quantities, either as measured or, in the absence of metering, using best estimates, must be maintained. This includes all deicing chemicals, not just glycols and urea (e.g., potassium acetate), because large quantities of these other chemicals can still have an adverse impact on receiving waters. Deicing operators must provide the above information to the airport authority for inclusion with any comprehensive airport SWPPPs.

8.S.5.3 ***Vehicle and Equipment Wash Water Requirements***. If wash water is handled in a manner that does not involve separate NPDES permitting or local pretreatment requirements (e.g., hauled offsite, retained onsite), describe the disposal method and include all pertinent information (e.g., frequency, volume, destination) in your SWPPP. Discharges of vehicle and equipment wash water are not authorized by this permit for this sector.

8.S.5.4 ***Documentation of Control Measures Used for Management of Stormwater***. Document in your SWPPP the control measures used for collecting or containing contaminated melt water from collection areas used for disposal of contaminated snow.

8.S.6 Additional Inspection Requirements

At a minimum, you must conduct facility inspections at least monthly during the deicing season (e.g., October through April for most mid-latitude airports). If your facility needs to deice before or after this period, expand the monthly inspections to include all months during which deicing chemicals may be used. The Director may specifically require you to increase inspection frequencies.

8.S.7 Indicator Monitoring (See also Part 4.2.1)

Table 8.S-1 identifies indicator monitoring that applies to the specific subsectors of Sector S. This indicator monitoring applies to both your primary industrial activity and any co-located industrial activities.

Table 8.S-1

Subsector (You may be subject to requirements for more than one sector/subsector)	Indicator Monitoring Parameter	Indicator Monitoring Threshold
Applies to all Sector S (Subsector S1) facilities with stormwater discharges from paved surfaces that will be initially sealed or re-sealed with coal-tar sealcoat where industrial activities are located during coverage under this permit	Polycyclic Aromatic Hydrocarbons (PAHs)*	Report Only/ No thresholds or baseline values
Subsector S1. Air Transportation Facilities (SIC Code 4512-4581)	Polycyclic Aromatic Hydrocarbons (PAHs)*	Report Only/ No thresholds or baseline values

* Monitoring is required for the 16 individual PAHs identified at Appendix A to 40 CFR Part 423: naphthalene, acenaphthylene, acenaphthene, fluorene, phenanthrene, anthracene, fluoranthene, pyrene, benzo[a]anthracene, chrysene, benzo[b]fluoranthene, benzo[k]fluoranthene, benzo[a]pyrene, benzo[g,h,i]perylene, indeno[1,2,3-c,d]pyrene, and dibenz[a,h]anthracene.

8.S.8 Sector-Specific Benchmarks (See also Part 4.2.2)

Table 8.S-2 identifies benchmarks that apply to Sector S. These benchmarks apply to both your primary industrial activity and any co-located industrial activities.

Table 8.S-2.		
Subsector (You may be subject to requirements for more than one sector/subsector)	**Parameter**	**Benchmark Monitoring Concentration**
For airports where a single permittee, or a combination of permitted facilities use more than 100,000 gallons of pure glycol in glycol- based deicing fluids and/or 100 tons or more of urea on an average annual basis, monitor the first four parameters in ONLY those discharge points that collect stormwater from areas where deicing activities occur (SIC 4512-4581).	Biochemical Oxygen Demand (BOD_5)[1]	30 mg/L
	Chemical Oxygen Demand (COD)[1]	120 mg/L
	Ammonia[1]	2.14 mg/L
	pH[1]	6.0 - 9.0 s.u.

[1] These are deicing-related parameters. Collect the four benchmark samples, and any required follow-up benchmark samples, during the timeframe defined in Part 8.S.4.1.8 when deicing activities are occurring.

8.S.9 Effluent Limitations Based on Effluent Limitations Guidelines and New Source Performance Standards (See also Part 4.2.3.1)

8.S.9.1 ***Airfield Pavement Deicing***. For both existing and new "primary airports" (as defined at 40 CFR 449.2) with 1,000 or more annual non-propeller aircraft departures that discharge stormwater from airfield pavement deicing activities, there shall be no discharge of airfield pavement deicers containing urea. To comply with this limitation, such airports must do one of the following: (1) certify annually on the annual report that you do not use pavement deicers containing urea, or (2) meet the effluent limitation in Table 8.S-3.

8.S.9.2 ***Aircraft Deicing***. Airports that are both "primary airports" (as defined at 40 CFR 449.2) and new sources ("new airports") with 1,000 or more annual non-propeller aircraft departures must meet the applicable requirements for aircraft deicing at 40 CFR 449.11(a). Discharges of the collected aircraft deicing fluid directly to waters of the U.S. are not eligible for coverage under this permit.

8.S.9.3 ***Monitoring, Reporting and Recordkeeping***. For new and existing airports subject to the effluent limitations in Part 8.S.9.1 or 8.S.9.2 of this permit, you must comply with the applicable monitoring, reporting and recordkeeping requirements outlined in 40 CFR 449.20.

Table 8.S-3		
Industrial Activity	**Parameter**	**Effluent Limitation**
Runoff containing urea from airfield pavement deicing at existing and new primary airports with 1,000 or more annual non-propeller aircraft departures	Ammonia as Nitrogen	14.7 mg/L, daily maximum

Part 8 – Sector-Specific Requirements for Industrial Activity
Subpart T – Sector T – Treatment Works

You must comply with Part 8 sector-specific requirements associated with your primary industrial activity and any co-located industrial activities, as defined in Appendix A. The sector- specific requirements apply to those areas of your facility where those sector-specific activities occur. These sector-specific requirements are in addition to any requirements specified elsewhere in this permit.

8.T.1 Covered Stormwater Discharges

The requirements in Subpart T apply to stormwater discharges associated with industrial activity from Treatment Works as identified by the Activity Code specified under Sector T in Table D-1 of Appendix D of the permit.

8.T.2 Industrial Activities Covered by Sector T

The requirements listed under this part apply to all existing point source stormwater discharges associated with the following activities:

8.T.2.1 Treatment works treating domestic sewage, or any other sewage sludge or wastewater treatment device or system used in the storage, treatment, recycling, and reclamation of municipal or domestic sewage, including land dedicated to the disposal of sewage sludge; that are located within the confines of a facility with a design flow of 1.0 million gallons per day (MGD) or more; or are required to have an approved pretreatment program under 40 CFR Part 403.

8.T.2.2 The following are not required to have permit coverage: farm lands, domestic gardens or lands used for sludge management where sludge is beneficially reused and which are not physically located within the facility, or areas that are in compliance with Section 405 of the CWA.

8.T.3 Limitations on Coverage

8.T.3.1 ***Prohibition of Non-Stormwater Discharges.*** (See also Part 1.1.3) Sanitary and industrial wastewater and equipment and vehicle wash water are not authorized by this permit. (EPA includes these prohibited non-stormwater discharges here solely as a helpful reminder to the operator that the only non-stormwater discharges authorized by this permit are at Part 1.2.2.)

8.T.4 Additional Technology-Based Effluent Limits

8.T.4.1 ***Control Measures.*** (See also Part 2.1.2) To minimize the discharge of pollutants in stormwater, implement control measures such as the following, where determined to be feasible (list not exclusive): routing stormwater to the treatment works; or covering exposed materials (i.e., from the following areas: grit, screenings and other solids handling, storage or disposal areas; sludge drying beds; dried sludge piles; compost piles; and septage or hauled waste receiving station).

8.T.4.2 ***Employee Training.*** (See also Part 2.1.2.8) At a minimum, training must address the following areas when applicable to a facility: petroleum product management; process chemical management; spill prevention and controls; fueling procedures; general good housekeeping practices; and proper procedures for using fertilizer, herbicides, and pesticides.

8.T.5 Additional SWPPP Requirements

8.T.5.1 ***Site Map.*** (See also Part 6.2.2) Document in your SWPPP where any of the following may be exposed to precipitation or stormwater: grit, screenings, and other solids handling, storage, or disposal areas; sludge drying beds; dried sludge piles; compost piles; septage or hauled waste receiving station; and storage areas for process chemicals, petroleum products, solvents, fertilizers, herbicides, and pesticides.

8.T.5.2 ***Potential Pollutant Sources.*** (See also Part 6.2.3) Document in your SWPPP the following additional sources and activities that have potential pollutants associated with them, as applicable: grit, screenings, and other solids handling, storage, or disposal areas; sludge drying beds; dried sludge piles; compost piles; septage or hauled waste receiving station; and access roads and rail lines.

8.T.5.3 ***Wastewater and Wash Water Requirements.*** If wastewater and/or vehicle and equipment wash water is not covered by another NPDES permit but is handled in another manner (e.g., hauled offsite, retained onsite), the disposal method must be described and all pertinent information (e.g., frequency, volume, destination) must be included in your SWPPP. Discharges of vehicle and equipment wash water, including tank cleaning operations, are not authorized by this permit for this sector.

8.T.6 Additional Inspection Requirements (See also Part 3.1)

Include the following areas in all inspections: access roads and rail lines; grit, screenings, and other solids handling, storage, or disposal areas; sludge drying beds; dried sludge piles; compost piles; and septage or hauled waste receiving station.

8.T.7 Indicator Monitoring (See also Part 4.2.1)

Table 8.T-1 identifies indicator monitoring that applies to the specific subsectors of Sector T. This indicator monitoring applies to both your primary industrial activity and any co-located industrial activities.

Table 8.T-1

Subsector (You may be subject to requirements for more than one sector/subsector)	Indicator Monitoring Parameter	Indicator Monitoring Threshold
Applies to all Sector T (Subsector T1) facilities with stormwater discharges from paved surfaces that will be initially sealed or re-sealed with coal-tar sealcoat where industrial activities are located during coverage under this permit	Polycyclic Aromatic Hydrocarbons (PAHs)*	Report Only/ No thresholds or baseline values
Subsector T1. Treatment Works treating domestic sewage or any other sewage sludge or wastewater treatment device or system, used in the storage, treatment, recycling, and reclamation of municipal or domestic sewage, including land dedicated to the disposal of sewage sludge that are located within the confines of the facility, with a design flow of 1.0 mgd or more, or required to have	Chemical Oxygen Demand (COD)	Report Only/ No thresholds or baseline values
	Total Suspended Solids (TSS)	Report Only/ No thresholds or baseline values
	pH	Report Only/ No thresholds or baseline values

Table 8.T-1		
Subsector (You may be subject to requirements for more than one sector/subsector)	**Indicator Monitoring Parameter**	**Indicator Monitoring Threshold**
an approved pretreatment program under 40 CFR Part 403. Not included are farm lands, domestic gardens or lands used for sludge management where sludge is beneficially reused and which are not physically located in the confines of the facility, or areas that are in compliance with section 405 of the CWA (Activity Code TW)		

[*] Monitoring is required for the 16 individual PAHs identified at Appendix A to 40 CFR Part 423: naphthalene, acenaphthylene, acenaphthene, fluorene, phenanthrene, anthracene, fluoranthene, pyrene, benzo[a]anthracene, chrysene, benzo[b]fluoranthene, benzo[k]fluoranthene, benzo[a]pyrene, benzo[g,h,i]perylene, indeno[1,2,3-c,d]pyrene, and dibenz[a,h]anthracene.

Part 8 – Sector-Specific Requirements for Industrial Activity

Subpart U – Sector U – Food and Kindred Products

You must comply with Part 8 sector-specific requirements associated with your primary industrial activity and any co-located industrial activities, as defined in Appendix A. The sector- specific requirements apply to those areas of your facility where those sector-specific activities occur. These sector-specific requirements are in addition to any requirements specified elsewhere in this permit.

8.U.1 Covered Stormwater Discharges

The requirements in Subpart U apply to stormwater discharges associated with industrial activity from Food and Kindred Products facilities as identified by the SIC Codes specified in Table D-1 of Appendix D of the permit.

8.U.2 Limitations on Coverage

8.U.2.1 ***Prohibition of Non-Stormwater Discharges.*** (See also Part 1.1.3) The following discharges are not authorized by this permit: discharges containing boiler blowdown, cooling tower overflow and blowdown, ammonia refrigeration purging, and vehicle washing and clean-out operations. (EPA includes these prohibited non-stormwater discharges here solely as a helpful reminder to the operator that the only non-stormwater discharges authorized by this permit are at Part 1.2.2.)

8.U.3 Additional Technology-Based Limitations

8.U.3.1 ***Employee Training***. (See also Part 2.1.2.8) Address pest control in your employee training program.

8.U.4 Additional SWPPP Requirements

8.U.4.1 ***Drainage Area Site Map.*** (See also Part 6.2.2) Document in your SWPPP the locations of the following activities if they are exposed to precipitation or stormwater: vents and stacks from cooking, drying, and similar operations; dry product vacuum transfer lines; animal holding pens; spoiled product; and broken product container storage areas.

8.U.4.2 ***Potential Pollutant Sources***. (See also Part 6.2.3) Document in your SWPPP, in addition to food and kindred products processing-related industrial activities, application and storage of pest control chemicals (e.g., rodenticides, insecticides, fungicides) used on plant grounds.

8.U.5 Additional Inspection Requirements (See also Part 3.1)

Inspect on a quarterly basis, at a minimum, the following areas where the potential for exposure to stormwater exists: loading and unloading areas for all significant materials; storage areas, including associated containment areas; waste management units; vents and stacks emanating from industrial activities; spoiled product and broken product container holding areas; animal holding pens; staging areas; and air pollution control equipment.

8.U.6 Indicator Monitoring (See also Part 4.2.1)

Table 8.U-1 identifies indicator monitoring that applies to the specific subsectors of Sector U. This indicator monitoring applies to both your primary industrial activity and any co-located industrial activities.

Table 8.U-1		
Subsector (You may be subject to requirements for more than one sector/subsector)	**Indicator Monitoring Parameter**	**Indicator Monitoring Threshold**
Applies to all Sector U (Subsectors U1, U2, and U3) facilities with stormwater discharges from paved surfaces that will be initially sealed or re-sealed with coal-tar sealcoat where industrial activities are located during coverage under this permit	Polycyclic Aromatic Hydrocarbons (PAHs)*	Report Only/ No thresholds or baseline values
Subsector U3. Meat Products (SIC Code 2011-2015); Dairy Products (SIC Code 2021-2026); Canned, Frozen, and Preserved Fruits, Vegetables, and Food Specialties (SIC Code 2032-2038); Bakery Products (SIC Code 2051-2053); Sugar and Confectionery Products (SIC Code 2061-2068); Beverages (SIC Code 2082-2087); Miscellaneous Food Preparations and Kindred Products (SIC Code 2091-2099); Tobacco Products (SIC Code 2111-2141)	Chemical Oxygen Demand (COD)	Report Only/ No thresholds or baseline values
	Total Suspended Solids (TSS)	Report Only/ No thresholds or baseline values
	pH	Report Only/ No thresholds or baseline values

* Monitoring is required for the 16 individual PAHs identified at Appendix A to 40 CFR Part 423: naphthalene, acenaphthylene, acenaphthene, fluorene, phenanthrene, anthracene, fluoranthene, pyrene, benzo[a]anthracene, chrysene, benzo[b]fluoranthene, benzo[k]fluoranthene, benzo[a]pyrene, benzo[g,h,i]perylene, indeno[1,2,3-c,d]pyrene, and dibenz[a,h]anthracene.

8.U.7 Sector-Specific Benchmarks (See also Part 4.2.2)

Table 8.U-2 identifies benchmarks that apply to the specific subsectors of Sector U. These benchmarks apply to both your primary industrial activity and any co-located industrial activities.

Table 8.U-2.		
Subsector (You may be subject to requirements for more than one Sector / Subsector)	**Parameter**	**Benchmark Monitoring Concentration**
Subsector U1. Grain Mill Products (SIC 2041-2048)	Total Suspended Solids (TSS)	100 mg/L
Subsector U2. Fats and Oils Products (SIC 2074-2079)	Biochemical Oxygen Demand (BOD_5)	30 mg/L
	Chemical Oxygen Demand (COD)	120 mg/L
	Nitrate plus Nitrite Nitrogen	0.68 mg/L
	Total Suspended Solids (TSS)	100 mg/L

Part 8 – Sector-Specific Requirements for Industrial Activity

Subpart V – Sector V – Textile Mills, Apparel, and Other Fabric Products

You must comply with Part 8 sector-specific requirements associated with your primary industrial activity and any co-located industrial activities, as defined in Appendix A. The sector- specific requirements apply to those areas of your facility where those sector-specific activities occur. These sector-specific requirements are in addition to any requirements specified elsewhere in this permit.

8.V.1 Covered Stormwater Discharges

The requirements in Subpart V apply to stormwater discharges associated with industrial activity from Textile Mills, Apparel, and Other Fabric Product manufacturing as identified by the SIC Codes specified under Sector V in Table D-1 of Appendix D of the permit.

8.V.2 Limitations on Coverage

8.V.2.1 ***Prohibition of Non-Stormwater Discharges.*** (See also Part 1.1.3) The following discharges are not authorized by this permit: discharges of wastewater (e.g., wastewater resulting from wet processing or from any processes relating to the production process), reused or recycled water, and waters used in cooling towers. If you have these types of discharges from your facility, you must cover them under a separate NPDES permit. (EPA includes these prohibited non-stormwater discharges here solely as a helpful reminder to the operator that the only non-stormwater discharges authorized by this permit are at Part 1.2.2.)

8.V.3 Additional Technology-Based Limitations

8.V.3.1 ***Good Housekeeping Measures.*** (See also Part 2.1.2.2)

8.V.3.1.1 **Material Storage Areas.** Plainly label and store all containerized materials (e.g., fuels, petroleum products, solvents, and dyes) in a protected area, away from drains. Minimize contamination of the stormwater from such storage areas. Also consider an inventory control plan to prevent excessive purchasing of potentially hazardous substances. For storing empty chemical drums or containers, ensure that the drums and containers are clean (consider triple-rinsing) and that there is no contact of residuals with precipitation or stormwater. Collect and dispose of wash water from these cleanings properly.

8.V.3.1.2 ***Material Handling Areas***. Minimize contamination of stormwater from material handling operations and areas through implementation of control measures such as the following, where determined to be feasible: using spill and overflow protection; covering fueling areas; and covering or enclosing areas where the transfer of material may occur. When applicable, address the replacement or repair of leaking connections, valves, transfer lines and pipes that may carry chemicals, dyes or wastewater.

8.V.3.1.3 ***Fueling Areas.*** Minimize contamination of stormwater from fueling areas through implementation of control measures such as the following, where determined to be feasible: covering the fueling area; using spill and overflow protection; minimizing run-on of stormwater to the fueling areas; using dry cleanup methods; and treating and/or recycling stormwater collected from the fueling area.

8.V.3.1.4 ***Above-Ground Storage Tank Area.*** Minimize contamination of stormwater from above-ground storage tank areas, including the associated piping and valves, through implementation of control measures such as the following, where determined to be feasible (list not exclusive): regular cleanup of these areas; including measures for tanks, piping and valves explicitly in your SPCC program; minimizing discharges of stormwater from adjacent areas; restricting access to the area; inserting filters in adjacent catch basins; providing absorbent booms in unbermed fueling areas; using dry cleanup methods; and permanently sealing drains within critical areas that may discharge to a storm drain.

8.V.3.1.5 ***Employee Training***. (See also Part 2.1.2.8) As part of your employee training program, address, at a minimum, the following activities (as applicable): use of reused and recycled waters, solvents management, proper disposal of dyes, proper disposal of petroleum products and spent lubricants, spill prevention and control, fueling procedures, and general good housekeeping practices.

8.V.4 Additional SWPPP Requirements

8.V.4.1 ***Potential Pollutant Sources.*** (See also Part 6.2.3) Document in your SWPPP the following additional sources and activities that have potential pollutants associated with them: industry-specific significant materials and industrial activities (e.g., backwinding, beaming, bleaching, backing bonding, carbonizing, carding, cut and sew operations, desizing, drawing, dyeing locking, fulling, knitting, mercerizing, opening, packing, plying, scouring, slashing, spinning, synthetic-felt processing, textile waste processing, tufting, turning, weaving, web forming, winging, yarn spinning, and yarn texturing).

8.V.4.2 ***Description of Good Housekeeping Measures for Material Storage Areas***. Document in the SWPPP your containment area or enclosure for materials stored outdoors in connection with Part 8.V.3.1.1 above.

8.V.5 Additional Inspection Requirements

Inspect, at least monthly, the following activities and areas (at a minimum): transfer and transmission lines, spill prevention, good housekeeping practices, management of process waste products, and all structural and nonstructural management practices.

8.V.6 Indicator Monitoring (See also Part 4.2.1)

Table 8.V-1 identifies indicator monitoring that applies to the specific subsectors of Sector V. This indicator monitoring applies to both your primary industrial activity and any co-located industrial activities.

Table 8.V-1

Subsector (You may be subject to requirements for more than one sector/subsector)	Indicator Monitoring Parameter	Indicator Monitoring Threshold
Applies to all Sector V (Subsector V1) facilities with stormwater discharges from paved surfaces that will be initially sealed or re-sealed with coal-tar sealcoat where industrial activities are located during coverage under this permit	Polycyclic Aromatic Hydrocarbons (PAHs)*	Report Only/ No thresholds or baseline values

Table 8.V-1		
Subsector (You may be subject to requirements for more than one sector/subsector)	**Indicator Monitoring Parameter**	**Indicator Monitoring Threshold**
Subsector V1. Textile Mill Products (SIC Code 2211-2299); Apparel and Other Finished Products Made from Fabrics and Similar Materials (SIC Code 2311-2399); Leather and Leather Products (note: see Sector Z1 for Leather Tanning and Finishing) (SIC Code 3131-3199)	Chemical Oxygen Demand (COD)	Report Only/ No thresholds or baseline values
	Total Suspended Solids (TSS)	Report Only/ No thresholds or baseline values
	pH	Report Only/ No thresholds or baseline values

[*] Monitoring is required for the 16 individual PAHs identified at Appendix A to 40 CFR Part 423: naphthalene, acenaphthylene, acenaphthene, fluorene, phenanthrene, anthracene, fluoranthene, pyrene, benzo[a]anthracene, chrysene, benzo[b]fluoranthene, benzo[k]fluoranthene, benzo[a]pyrene, benzo[g,h,i]perylene, indeno[1,2,3-c,d]pyrene, and dibenz[a,h]anthracene.

Part 8 – Sector-Specific Requirements for Industrial Activity

Subpart W – Sector W – Furniture and Fixtures

You must comply with Part 8 sector-specific requirements associated with your primary industrial activity and any co-located industrial activities, as defined in Appendix A. The sector- specific requirements apply to those areas of your facility where those sector-specific activities occur. These sector-specific requirements are in addition to any requirements specified elsewhere in this permit.

8.W.1 Covered Stormwater Discharges

The requirements in Subpart W apply to stormwater discharges associated with industrial activity from Furniture and Fixtures facilities as identified by the SIC Codes specified under Sector W in Table D-1 of Appendix D of the permit.

8.W.2 Additional SWPPP Requirements

8.W.2.1 ***Drainage Area Site Map.*** (See also Part 6.2.2) Document in your SWPPP where any of the following may be exposed to precipitation or stormwater: material storage (including tanks or other vessels used for liquid or waste storage) areas; outdoor material processing areas; areas where wastes are treated, stored, or disposed of; access roads; and rail spurs.

8.W.3 Indicator Monitoring (See also Part 4.2.1)

Table 8.W-1 identifies indicator monitoring that applies to the specific subsectors of Sector W. This indicator monitoring applies to both your primary industrial activity and any co-located industrial activities.

Table 8.W-1

Subsector (You may be subject to requirements for more than one sector/subsector)	Indicator Monitoring Parameter	Indicator Monitoring Threshold
Applies to all Sector W (Subsector W1) facilities with stormwater discharges from paved surfaces that will be initially sealed or re-sealed with coal-tar sealcoat where industrial activities are located during coverage under this permit	Polycyclic Aromatic Hydrocarbons (PAHs)*	Report Only/ No thresholds or baseline values
Subsector W1. Wood Kitchen Cabinets (SIC Code 2434); Furniture and Fixtures (SIC Code 2511-2599)	Chemical Oxygen Demand (COD)	Report Only/ No thresholds or baseline values
	Total Suspended Solids (TSS)	Report Only/ No thresholds or baseline values
	pH	Report Only/ No thresholds or baseline values

* Monitoring is required for the 16 individual PAHs identified at Appendix A to 40 CFR Part 423: naphthalene, acenaphthylene, acenaphthene, fluorene, phenanthrene, anthracene, fluoranthene, pyrene, benzo[a]anthracene, chrysene, benzo[b]fluoranthene, benzo[k]fluoranthene, benzo[a]pyrene, benzo[g,h,i]perylene, indeno[1,2,3-c,d]pyrene, and dibenz[a,h]anthracene.

Part 8 – Sector-Specific Requirements for Industrial Activity

Subpart X – Sector X – Printing and Publishing

You must comply with Part 8 sector-specific requirements associated with your primary industrial activity and any co-located industrial activities, as defined in Appendix A. The sector- specific requirements apply to those areas of your facility where those sector-specific activities occur. These sector-specific requirements are in addition to any requirements specified elsewhere in this permit.

8.X.1 Covered Stormwater Discharges

The requirements in Subpart X apply to stormwater discharges associated with industrial activity from Printing and Publishing facilities as identified by the SIC Codes specified under Sector X in Table D-1 of Appendix D of the permit.

8.X.2 Additional Technology-Based Effluent Limits

8.X.2.1 ***Good Housekeeping Measures.*** (See also Part 2.1.2.2)

8.X.2.1.1 ***Material Storage Areas.*** Plainly label and store all containerized materials (e.g., skids, pallets, solvents, bulk inks, hazardous waste, empty drums, portable and mobile containers of plant debris, wood crates, steel racks, and fuel oil) in a protected area, away from drains. Minimize contamination of the stormwater from such storage areas. Also consider an inventory control plan to prevent excessive purchasing of potentially hazardoussubstances.

8.X.2.1.2 ***Material Handling Area.*** Minimize contamination of stormwater from material handling operations and areas (e.g., blanket wash, mixing solvents, loading and unloading materials) through implementation of control measures such as the following, where determined to be feasible (list not exclusive): using spill and overflow protection; covering fueling areas; and covering or enclosing areas where the transfer of materials may occur. When applicable, address the replacement or repair of leaking connections, valves, transfer lines, and pipes that may carry chemicals or wastewater.

8.X.2.1.3 ***Fueling Areas***. Minimize contamination of stormwater from fueling areas through implementation of control measures such as the following, where determined to be feasible (list not exclusive): covering the fueling area; using spill and overflow protection; minimizing discharges of stormwater to the fueling areas; using dry cleanup methods; and treating and/or recycling stormwater collected from the fueling area.

8.X.2.1.4 ***Above Ground Storage Tank Area.*** Minimize contamination of the stormwater from above-ground storage tank areas, including the associated piping and valves, through implementation of control measures such as the following, where determined to be feasible (list not exclusive): regularly cleaning these areas; explicitly addressing tanks; piping and valves in the SPCC program; minimizing stormwater discharges from adjacent areas; restricting access to the area; inserting filters in adjacent catch basins; providing absorbent booms in unbermed fueling areas; using dry cleanup methods; and permanently sealing drains within critical areas that may discharge to a storm drain.

8.X.2.2 ***Employee Training.*** (See also Part 2.1.2.8) As part of your employee training program, address, at a minimum, the following activities (as applicable): spent solvent management, spill prevention and control, used oil management, fueling procedures, and general good housekeeping practices.

8.X.3 Additional SWPPP Requirements

8.X.3.1 Description of Good Housekeeping Measures for Material Storage Areas. In connection with Part 8.X.2.1.1, describe in the SWPPP the containment area or enclosure for materials stored outdoors.

8.X.4 Indicator Monitoring (See also Part 4.2.1)

Table 8.X-1 identifies indicator monitoring that applies to the specific subsectors of Sector X. This indicator monitoring applies to both your primary industrial activity and any co-located industrial activities.

Table 8.X-1

Subsector (You may be subject to requirements for more than one sector/subsector)	Indicator Monitoring Parameter	Indicator Monitoring Threshold
Applies to all Sector X (Subsector X1) facilities with stormwater discharges from paved surfaces that will be initially sealed or re-sealed with coal-tar sealcoat where industrial activities are located during coverage under this permit	Polycyclic Aromatic Hydrocarbons (PAHs)*	Report Only/ No thresholds or baseline values
Subsector X1. Printing, Publishing, and Allied Industries (SIC Code 2711-2796)	Chemical Oxygen Demand (COD)	Report Only/ No thresholds or baseline values
	Total Suspended Solids (TSS)	Report Only/ No thresholds or baseline values
	pH	Report Only/ No thresholds or baseline values

* Monitoring is required for the 16 individual PAHs identified at Appendix A to 40 CFR Part 423: naphthalene, acenaphthylene, acenaphthene, fluorene, phenanthrene, anthracene, fluoranthene, pyrene, benzo[a]anthracene, chrysene, benzo[b]fluoranthene, benzo[k]fluoranthene, benzo[a]pyrene, benzo[g,h,i]perylene, indeno[1,2,3-c,d]pyrene, and dibenz[a,h]anthracene.

Part 8 – Sector-Specific Requirements for Industrial Activity

Subpart Y – Sector Y – Rubber, Miscellaneous Plastic Products, and Miscellaneous Manufacturing Industries

You must comply with Part 8 sector-specific requirements associated with your primary industrial activity and any co-located industrial activities, as defined in Appendix A. The sector- specific requirements apply to those areas of your facility where those sector-specific activities occur. These sector-specific requirements are in addition to any requirements specified elsewhere in this permit.

8.Y.1 Covered Stormwater Discharges

The requirements in Subpart Y apply to stormwater discharges associated with industrial activity from Rubber, Miscellaneous Plastic Products, and Miscellaneous Manufacturing Industries facilities as identified by the SIC Codes specified under Sector Y in Table D-1 of Appendix D of the permit.

8.Y.2 Additional Technology-Based Effluent Limits

8.Y.2.1 ***Controls for Rubber Manufacturers.*** (See also Part 2.1.2) Minimize the discharge of zinc in your stormwater discharges. Parts 8.Y.2.1.1 to 8.Y.2.1.5 give possible sources of zinc to be reviewed and list control measures to be implemented where determined to be feasible. Implement additional control measures such as the following, where determined to be feasible (list not exclusive): using chemicals purchased in pre-weighed, sealed polyethylene bags; storing in-use materials in sealable containers, ensuring an airspace between the container and the cover to minimize "puffing" losses when the container is opened; and using automatic dispensing and weighing equipment.

8.Y.2.1.1 ***Zinc Bags***. Ensure proper handling and storage of zinc bags at your facility through implementation of control measures such as the following, where determined to be feasible (list not exclusive): employee training on the handling and storage of zinc bags; indoor storage of zinc bags; cleanup of zinc spills without washing the zinc into the storm drain; and the use of 2,500- pound sacks of zinc rather than 50- to 100-pound sacks.

8.Y.2.1.2 ***Dumpsters.*** Minimize discharges of zinc from dumpsters through implementation of control measures such as the following, where determined to be feasible (list not exclusive): covering the dumpster; moving the dumpster indoors; and providing a lining for the dumpster.

8.Y.2.1.3 ***Dust Collectors and Baghouses.*** Minimize contributions of zinc to stormwater from dust collectors and baghouses. Replace or repair, as appropriate, improperly operating dust collectors and baghouses.

8.Y.2.1.4 ***Grinding Operations.*** Minimize contamination of stormwater as a result of dust generation from rubber grinding operations. Where determined to be feasible, install a dust collection system.

8.Y.2.1.5 ***Zinc Stearate Coating Operations.*** Minimize the potential for stormwater contamination from drips and spills of zinc stearate slurry that may be released to the storm drain. Where determined to be feasible, use alternative compounds to zinc stearate.

8.Y.2.2 Controls for Plastic Products Manufacturers. Minimize the discharge of plastic resin pellets in your stormwater discharges through implementation of control measures such as the following, where determined to be feasible (list not exclusive): minimizing spills; cleaning up of spills promptly and thoroughly; sweeping thoroughly; pellet capturing; employee education; and disposal precautions.

8.Y.3 Additional SWPPP Requirements

8.Y.3.1 Potential Pollutant Sources for Rubber Manufacturers. (See also Part 6.2.3) Document in your SWPPP the use of zinc at your facility and the possible pathways through which zinc may be discharged in stormwater.

8.Y.4 Indicator Monitoring (See also Part 4.2.1)

Table 8.Y-1 identifies indicator monitoring that applies to the specific subsectors of Sector Y. This indicator monitoring applies to both your primary industrial activity and any co-located industrial activities.

Table 8.Y-1

Subsector (You may be subject to requirements for more than one sector/subsector)	Indicator Monitoring Parameter	Indicator Monitoring Threshold
Applies to all Sector Y (Subsectors Y1 and Y2) facilities with stormwater discharges from paved surfaces that will be initially sealed or re-sealed with coal-tar sealcoat where industrial activities are located during coverage under this permit	Polycyclic Aromatic Hydrocarbons (PAHs)*	Report Only/ No thresholds or baseline values
Subsector Y2. Miscellaneous Plastics Products (SIC Code 3081-3089); Musical Instruments (SIC Code 3931); Dolls, Toys, Games, and Sporting and Athletic Goods (SIC Code 3942-3949); Pens, Pencils, and Other Artists' Materials (SIC Code 3951-3955 (except 3952 – see Sector C)); Costume Jewelry, Costume Novelties, Buttons, and Miscellaneous Notions, Except Precious Metal (SIC Code 3961, 3965); Miscellaneous Manufacturing Industries (SIC Code 3991-3999)	Chemical Oxygen Demand (COD)	Report Only/ No thresholds or baseline values
	Total Suspended Solids (TSS)	Report Only/ No thresholds or baseline values
	pH	Report Only/ No thresholds or baseline values

* Monitoring is required for the 16 individual PAHs identified at Appendix A to 40 CFR Part 423: naphthalene, acenaphthylene, acenaphthene, fluorene, phenanthrene, anthracene, fluoranthene, pyrene, benzo[a]anthracene, chrysene, benzo[b]fluoranthene, benzo[k]fluoranthene, benzo[a]pyrene, benzo[g,h,i]perylene, indeno[1,2,3-c,d]pyrene, and dibenz[a,h]anthracene.

8.Y.5 Sector-Specific Benchmarks (See also Part 4.2.2)

Table 8.Y-2 identifies benchmarks that apply to Sector Y. These benchmarks apply to both your primary industrial activity and any co-located industrial activities.

Table 8.Y-2.		
Subsector (You may be subject to requirements for more than one sector/subsector)	**Parameter**	**Benchmark Monitoring Concentration**
Subsector Y1. Rubber Products Manufacturing (SIC 3011, 3021, 3052, 3053, 3061, 3069)	Total Recoverable Zinc (freshwater)[2] Total Recoverable Zinc (saltwater)[1]	Hardness Dependent 90 µg/L

[1]Saltwater benchmark values apply to stormwater discharges into saline waters where indicated.

[2] The freshwater benchmark values of some metals are dependent on water hardness. For these parameters, permittees must determine the hardness of the receiving water (see Appendix J, "Calculating Hardness in Receiving Waters for Hardness Dependent Metals," for methodology), in accordance with Part 4.2.2.1, to identify the applicable 'hardness range' for determining their benchmark value applicable to their facility. Hardness Dependent Benchmarks follow in the table below:

Freshwater Hardness Range	**Zinc** (µg/L)
0-24.99 mg/L	37
25-49.99 mg/L	52
50-74.99 mg/L	80
75-99.99 mg/L	107
100-124.99 mg/L	132
125-149.99 mg/L	157
150-174.99 mg/L	181
175-199.99 mg/L	204
200-224.99 mg/L	227
225-249.99 mg/L	249
250+ mg/L	260

Part 8 – Sector-Specific Requirements for Industrial Activity

Subpart Z – Sector Z – Leather Tanning and Finishing

You must comply with Part 8 sector-specific requirements associated with your primary industrial activity and any co-located industrial activities, as defined in Appendix A. The sector- specific requirements apply to those areas of your facility where those sector-specific activities occur. These sector-specific requirements are in addition to any requirements specified elsewhere in this permit.

8.Z.1 Covered Stormwater Discharges

The requirements in Subpart Z apply to stormwater discharges associated with industrial activity from Leather Tanning and Finishing facilities as identified by the SIC Code specified under Sector Z in Table D-1 of Appendix D of the permit.

8.Z.2 Additional Technology-Based Effluent Limits

8.Z.2.1 ***Good Housekeeping Measures.*** (See also Part 2.1.2.2)

8.Z.2.1.1 ***Storage Areas for Raw, Semiprocessed, or Finished Tannery By-products.*** Minimize contamination of stormwater from pallets and bales of raw, semiprocessed, or finished tannery by-products (e.g., splits, trimmings, shavings). Store or protect indoors with polyethylene wrapping, tarpaulins, roofed storage, etc. where practicable. Place materials on an impermeable surface and enclose or put berms (or equivalent measures) around the area to prevent stormwater run-on and discharges where practicable.

8.Z.2.1.2 ***Material Storage Areas.*** Label storage containers of all materials (e.g., specific chemicals, hazardous materials, spent solvents, waste materials) and minimize contact of such materials with stormwater.

8.Z.2.1.3 ***Buffing and Shaving Areas.*** Minimize contamination of stormwater with leather dust from buffing and shaving areas through implementation of control measures such as the following, where determined to be feasible (list not exclusive): implementing dust collection enclosures; implementing preventive inspection and maintenance programs; or other appropriate preventive measures.

8.Z.2.1.4 ***Receiving, Unloading, and Storage Areas.*** Minimize contamination of stormwater from receiving, unloading, and storage areas. If these areas are exposed, implement control measures such as the following, where determined to be feasible (list not exclusive): covering all hides and chemical supplies; diverting drainage to the process sewer; or grade berming or curbing the area to prevent stormwater discharges.

8.Z.2.1.5 ***Outdoor Storage of Contaminated Equipment.*** Minimize contact of stormwater with contaminated equipment through implementation of control measures such as the following, where determined to be feasible (list not exclusive): covering equipment, diverting drainage to the process sewer, and cleaning thoroughly prior to storage.

8.Z.2.1.6 ***Waste Management.*** Minimize contamination of stormwater from waste storage areas through implementation of control measures such as the following, where determined to be feasible (list not exclusive): covering dumpsters; moving waste management activities indoors; covering waste piles with temporary covering material such as tarpaulins or polyethylene; and minimizing stormwater discharges by enclosing the area or building berms around the area.

8.Z.3 Additional SWPPP Requirements

8.Z.3.1 ***Drainage Area Site Map.*** (See also Part 6.2.2) Identify in your SWPPP where any of the following may be exposed to precipitation or stormwater: processing and storage areas of the beamhouse, tanyard, and re-tan wet finishing and dry finishing operations.

8.Z.3.2 ***Potential Pollutant Sources.*** (See also Part 6.2.3) Document in your SWPPP the following sources and activities that have potential pollutants associated with them (as appropriate): temporary or permanent storage of fresh and brine-cured hides; extraneous hide substances and hair; leather dust, scraps, trimmings, and shavings.

8.Z.4 Indicator Monitoring (See also Part 4.2.1)

Table 8.Z-1 identifies indicator monitoring that applies to the specific subsectors of Sector Z. This indicator monitoring applies to both your primary industrial activity and any co-located industrial activities.

Table 8.Z-1

Subsector (You may be subject to requirements for more than one sector/subsector)	Indicator Monitoring Parameter	Indicator Monitoring Threshold
Applies to all Sector Z (Subsector Z1) facilities with stormwater discharges from paved surfaces that will be initially sealed or re-sealed with coal-tar sealcoat where industrial activities are located during coverage under this permit	Polycyclic Aromatic Hydrocarbons (PAHs)*	Report Only/ No thresholds or baseline values
Subsector Z1. Leather Tanning and Finishing (SIC Code 3111)	Chemical Oxygen Demand (COD)	Report Only/ No thresholds or baseline values
	Total Suspended Solids (TSS)	Report Only/ No thresholds or baseline values
	pH	Report Only/ No thresholds or baseline values

* Monitoring is required for the 16 individual PAHs identified at Appendix A to 40 CFR Part 423: naphthalene, acenaphthylene, acenaphthene, fluorene, phenanthrene, anthracene, fluoranthene, pyrene, benzo[a]anthracene, chrysene, benzo[b]fluoranthene, benzo[k]fluoranthene, benzo[a]pyrene, benzo[g,h,i]perylene, indeno[1,2,3-c,d]pyrene, and dibenz[a,h]anthracene.

Part 8 – Sector-Specific Requirements for Industrial Activity

Subpart AA – Sector AA – Fabricated Metal Products

You must comply with Part 8 sector-specific requirements associated with your primary industrial activity and any co-located industrial activities, as defined in Appendix A. The sector- specific requirements apply to those areas of your facility where those sector-specific activities occur. These sector-specific requirements are in addition to any requirements specified elsewhere in this permit.

8.AA.1 Covered Stormwater Discharges

The requirements in Subpart AA apply to stormwater discharges associated with industrial activity from Fabricated Metal Products facilities as identified by the SIC Codes specified under Sector AA in Table D-1 of Appendix D of the permit.

8.AA.2 Additional Technology-Based Effluent Limits

8.AA.2.1 Good Housekeeping Measures. (See also Part 2.1.2.2)

8.AA.2.1.1 ***Raw Steel Handling Storage.*** Minimize the generation of and/or recover and properly manage scrap metals, fines, and iron dust. Include measures for containing materials within storage handling areas.

8.AA.2.1.2 Paints and Painting Equipment. Minimize exposure of paint and painting equipment to stormwater.

8.AA.2.2 Spill Prevention and Response Procedures. (See also Part 2.1.2.4) Ensure that the necessary equipment to implement a cleanup is available to personnel. The following areas should be addressed:

8.AA.2.2.1 Metal Fabricating Areas. Maintain clean, dry, orderly conditions in these areas. Use dry clean-up techniques where practicable.

8.AA.2.2.2 Storage Areas for Raw Metal. Keep these areas free of conditions that could cause, or impede appropriate and timely response to, spills or leakage of materials through implementation of control measures such as the following, where determined to be feasible (list not exclusive): maintaining storage areas so that there is easy access in the event of a spill, and labeling stored materials to aid in identifying spill contents.

8.AA.2.2.3 Metal Working Fluid Storage Areas. Minimize the potential for stormwater contamination from storage areas for metal working fluids.

8.AA.2.2.4 Cleaners and Rinse Water. Control and clean up spills of solvents and other liquid cleaners, control sand buildup and disbursement from sand-blasting operations, and prevent exposure of recyclable wastes. Substitute environmentally benign cleaners when possible.

8.AA.2.2.5 Lubricating Oil and Hydraulic Fluid Operations. Minimize the potential for stormwater contamination from lubricating oil and hydraulic fluid operations. Use monitoring equipment or other devices to detect and control leaks and overflows where feasible. Install perimeter controls such as dikes, curbs, grass filter strips, or equivalent measures where feasible.

8.AA.2.2.6 Chemical Storage Areas. Minimize stormwater contamination and accidental spillage in chemical storage areas. Include a program to inspect containers and identify proper disposal methods.

8.AA.2.3 ***Spills and Leaks.*** (See also Part 6.2.3.3) In your spill prevention and response procedures, required by Part 2.1.2.4, pay attention to the following materials (at a minimum): chromium, toluene, pickle liquor, sulfuric acid, zinc and other water priority chemicals, and hazardous chemicals and wastes.

8.AA.3 Additional SWPPP Requirements

8.AA.3.1 ***Drainage Area Site Map.*** (See also Part 6.2.2) Document in your SWPPP where any of the following may be exposed to precipitation or stormwater: raw metal storage areas; finished metal storage areas; scrap disposal collection sites; equipment storage areas; retention and detention basins; temporary and permanent diversion dikes or berms; right-of-way or perimeter diversion devices; sediment traps and barriers; processing areas, including outside painting areas; wood preparation; recycling; and raw material storage.

8.AA.3.2 ***Potential Pollutant Sources.*** (See also Part 6.2.3) Document in your SWPPP the following additional sources and activities that have potential pollutants associated with them: loading and unloading operations for paints, chemicals, and raw materials; outdoor storage activities for raw materials, paints, empty containers, corn cobs, chemicals, and scrap metals; outdoor manufacturing or processing activities such as grinding, cutting, degreasing, buffing, and brazing; onsite waste disposal practices for spent solvents, sludge, pickling baths, shavings, ingot pieces, and refuse and waste piles.

8.AA.4 Additional Inspection Requirements

8.AA.4.1 ***Inspections.*** (See also Part 3.1) At a minimum, include the following areas in all inspections: raw metal storage areas, finished product storage areas, material and chemical storage areas, spent solvents and chemical storage areas, recycling areas, loading and unloading areas, equipment storage areas, paint areas, drainage from roof and vehicle fueling and maintenance areas. Potential pollutants include chromium, zinc, lubricating oil, solvents, aluminum, oil and grease, methyl ethyl ketone, steel, and related materials.

8.AA.5 Indicator Monitoring (See also Part 4.2.1)

Table 8.AA-1 identifies indicator monitoring that applies to the specific subsectors of Sector AA. This indicator monitoring applies to both your primary industrial activity and any co-located industrial activities.

Table 8.AA-1

Subsector (You may be subject to requirements for more than one sector/subsector)	Indicator Monitoring Parameter	Indicator Monitoring Threshold
Applies to all Sector AA (Subsectors AA1 and AA2) facilities with stormwater discharges from paved surfaces that will be initially sealed or re-sealed with coal-tar sealcoat where industrial activities are located during coverage under this permit	Polycyclic Aromatic Hydrocarbons (PAHs)*	Report Only/ No thresholds or baseline values

* Monitoring is required for the 16 individual PAHs identified at Appendix A to 40 CFR Part 423: naphthalene, acenaphthylene, acenaphthene, fluorene, phenanthrene, anthracene, fluoranthene, pyrene, benzo[a]anthracene, chrysene, benzo[b]fluoranthene, benzo[k]fluoranthene, benzo[a]pyrene, benzo[g,h,i]perylene, indeno[1,2,3-c,d]pyrene, and dibenz[a,h]anthracene.

8.AA.6 Sector-Specific Benchmarks (See also Part 4.2.2)

Table 8.AA-2 identifies benchmarks that apply to the specific subsectors of Sector AA. These benchmarks apply to both your primary industrial activity and any co-located industrial activities.

Table 8.AA-2

Subsector (You may be subject to requirements for more than one sector/subsector)	Parameter	Benchmark Monitoring Concentration
Subsector AA1. Fabricated Metal Products, except Coating (SIC 3411-3499; 3911-3915)	Total Recoverable Aluminum	1,100 µg/L
	Total Recoverable Zinc (freshwater)[2] Total Recoverable Zinc (saltwater)[1]	Hardness Dependent 90 µg/L
	Nitrate plus Nitrite Nitrogen	0.68 mg/L
Subsector AA2. Fabricated Metal Coating and Engraving (SIC 3479)	Total Recoverable Zinc (freshwater)[2] Total Recoverable Zinc (saltwater)[1]	Hardness Dependent 90 µg/L
	Nitrate plus Nitrite Nitrogen	0.68 mg/L

[1] Saltwater benchmark values apply to stormwater discharges into saline waters where indicated.

[2] The freshwater benchmark values of some metals are dependent on water hardness. For these parameters, permittees must determine the hardness of the receiving water (see Appendix J, "Calculating Hardness in Receiving Waters for Hardness Dependent Metals," for methodology), in accordance with Part 4.2.2.1, to identify the applicable 'hardness range' for determining their benchmark value applicable to their facility. Hardness Dependent Benchmarks follow in the table below:

Freshwater Hardness Range	**Zinc** (µg/L)
0-24.99 mg/L	37
25-49.99 mg/L	52
50-74.99 mg/L	80
75-99.99 mg/L	107
100-124.99 mg/L	132
125-149.99 mg/L	157
150-174.99 mg/L	181
175-199.99 mg/L	204
200-224.99 mg/L	227
225-249.99 mg/L	249
250+ mg/L	260

Part 8 – Sector-Specific Requirements for Industrial Activity

Subpart AB – Sector AB – Transportation Equipment, Industrial or Commercial Machinery Facilities

You must comply with Part 8 sector-specific requirements associated with your primary industrial activity and any co-located industrial activities, as defined in Appendix A. The sector- specific requirements apply to those areas of your facility where those sector-specific activities occur. These sector-specific requirements are in addition to any requirements specified elsewhere in this permit.

8.AB.1 Stormwater Discharges

The requirements in Subpart AB apply to stormwater discharges associated with industrial activity from Transportation Equipment, Industrial or Commercial Machinery facilities as identified by the SIC Codes specified under Sector AB in Table D-1 of Appendix D of the permit.

8.AB.2 Additional SWPPP Requirements

8.AB.2.1 ***Drainage Area Site Map.*** (See also Part 6.2.2) Identify in your SWPPP where any of the following may be exposed to precipitation or stormwater: vents and stacks from metal processing and similar operations.

8.AB.3 Indicator Monitoring (See also Part 4.2.1)

Table 8.AB-1 identifies indicator monitoring that applies to the specific subsectors of Sector AB. This indicator monitoring applies to both your primary industrial activity and any co-located industrial activities.

Table 8.AB-1

Subsector (You may be subject to requirements for more than one sector/subsector)	Indicator Monitoring Parameter	Indicator Monitoring Threshold
Applies to all Sector AB (Subsector AB1) facilities with stormwater discharges from paved surfaces that will be initially sealed or re-sealed with coal-tar sealcoat where industrial activities are located during coverage under this permit	Polycyclic Aromatic Hydrocarbons (PAHs)*	Report Only/ No thresholds or baseline values
Subsector AB1. Industrial and Commercial Machinery, Except Computer and Office Equipment (see Sector AC) (SIC Code 3511-3599 (except 3571-3579)); Transportation Equipment Except Ship and Boat Building and Repairing (see Sector R) (SIC Code 3711-3799 (except 3731, 3732))	Chemical Oxygen Demand (COD)	Report Only/ No thresholds or baseline values
	Total Suspended Solids (TSS)	Report Only/ No thresholds or baseline values
	pH	Report Only/ No thresholds or baseline values

* Monitoring is required for the 16 individual PAHs identified at Appendix A to 40 CFR Part 423: naphthalene, acenaphthylene, acenaphthene, fluorene, phenanthrene, anthracene, fluoranthene, pyrene, benzo[a]anthracene, chrysene, benzo[b]fluoranthene, benzo[k]fluoranthene, benzo[a]pyrene, benzo[g,h,i]perylene, indeno[1,2,3-c,d]pyrene, and dibenz[a,h]anthracene.

Part 8 – Sector-Specific Requirements for Industrial Activity

Subpart AC – Sector AC – Electronic and Electrical Equipment and Components, Photographic and Optical Goods

You must comply with Part 8 sector-specific requirements associated with your primary industrial activity and any co-located industrial activities, as defined in Appendix A. The sector- specific requirements apply to those areas of your facility where those sector-specific activities occur. These sector-specific requirements are in addition to any requirements specified elsewhere in this permit.

8.AC.1 Covered Stormwater Discharges

The requirements in Subpart AC apply to stormwater discharges associated with industrial activity from facilities that manufacture Electronic and Electrical Equipment and Components, Photographic and Optical goods as identified by the SIC Codes specified in Table D-1 of Appendix D of the permit.

8.AC.2 Additional Requirements

No additional sector-specific requirements apply.

8.AC.3 Indicator Monitoring (See also Part 4.2.1)

Table 8.AC-1 identifies indicator monitoring that applies to the specific subsectors of Sector AC. This indicator monitoring applies to both your primary industrial activity and any co-located industrial activities.

Table 8.AC-1

Subsector (You may be subject to requirements for more than one sector/subsector)	Indicator Monitoring Parameter	Indicator Monitoring Threshold
Applies to all Sector AC (Subsector AC1) facilities with stormwater discharges from paved surfaces that will be initially sealed or re-sealed with coal-tar sealcoat where industrial activities are located during coverage under this permit	Polycyclic Aromatic Hydrocarbons (PAHs)*	Report Only/ No thresholds or baseline values
Subsector AC1. Computer and Office Equipment (SIC Code 3571-3579); Measuring, Analyzing, and Controlling Instruments; Photographic and Optical Goods, Watches, and Clocks (SIC Code 3812-3873); Electronic and Electrical Equipment and Components, Except Computer Equipment (SIC Code 3612-3699)	Chemical Oxygen Demand (COD)	Report Only/ No thresholds or baseline values
	Total Suspended Solids (TSS)	Report Only/ No thresholds or baseline values
	pH	Report Only/ No thresholds or baseline values

* Monitoring is required for the 16 individual PAHs identified at Appendix A to 40 CFR Part 423: naphthalene, acenaphthylene, acenaphthene, fluorene, phenanthrene, anthracene, fluoranthene, pyrene, benzo[a]anthracene, chrysene, benzo[b]fluoranthene, benzo[k]fluoranthene, benzo[a]pyrene, benzo[g,h,i]perylene, indeno[1,2,3-c,d]pyrene, and dibenz[a,h]anthracene.

Part 8 – Sector-Specific Requirements for Industrial Activity

Subpart AD – Sector AD – Stormwater Discharges Designated by the Director as Requiring Permits

You must comply with Part 8 sector-specific requirements associated with your primary industrial activity and any co-located industrial activities, as defined in Appendix A. The sector- specific requirements apply to those areas of your facility where those sector-specific activities occur. These sector-specific requirements are in addition to any requirements specified elsewhere in this permit.

8.AD.1 Covered Stormwater Discharges

Sector AD is used to provide permit coverage for facilities designated by the Director as needing a stormwater permit, and any discharges of stormwater associated with industrial activity that do not meet the description of an industrial activity covered by Sectors A-AC.

8.AD.1.1 Eligibility for Permit Coverage. Because this sector is primarily intended for use by discharges designated by the Director as needing a stormwater permit (which is an atypical circumstance), and your facility may or may not normally be discharging stormwater associated with industrial activity, you must obtain the Director's written permission to use this permit prior to submitting an NOI. If you are authorized to use this permit, you will still be required to ensure that your discharges meet the basic eligibility provisions of this permit at Part 1.1.

8.AD.2 Sector-Specific Benchmarks and Effluent Limits. (See also Part 4)

The Director will establish any additional monitoring and reporting requirements for your facility prior to authorizing you to be covered by this permit. Additional monitoring requirements would be based on the nature of activities at your facility and your stormwater discharges.

8.AD.3 Indicator Monitoring (See also Part 4.2.1)

Table 8.AD-1 identifies indicator monitoring that applies to the specific subsectors of Sector AD. This indicator monitoring applies to both your primary industrial activity and any co-located industrial activities.

Table 8.AD-1

Subsector (You may be subject to requirements for more than one sector/subsector)	Indicator Monitoring Parameter	Indicator Monitoring Threshold
Applies to all Sector AD (Subsectors AD1) facilities with stormwater discharges from paved surfaces that will be initially sealed or re-sealed with coal-tar sealcoat where industrial activities are located during coverage under this permit	Polycyclic Aromatic Hydrocarbons (PAHs)*	Report Only/ No thresholds or baseline values
Subsector AD1. Other stormwater discharges designated by the Director as needing a permit (see 40 CFR 122.26(a)(9)(i)(C) & (D)) or any facility discharging stormwater associated with industrial activity not described by any of Sectors A-AC. NOTE: Facilities may not elect to be covered under Sector AD. Only the Director may assign a facility to Sector AD.	Chemical Oxygen Demand (COD)	Report Only/ No thresholds or baseline values
	Total Suspended Solids (TSS)	Report Only/ No thresholds or baseline values
	pH	Report Only/ No thresholds or baseline values

[*] Monitoring is required for the 16 individual PAHs identified at Appendix A to 40 CFR Part 423: naphthalene, acenaphthylene, acenaphthene, fluorene, phenanthrene, anthracene, fluoranthene, pyrene, benzo[a]anthracene, chrysene, benzo[b]fluoranthene, benzo[k]fluoranthene, benzo[a]pyrene, benzo[g,h,i]perylene, indeno[1,2,3-c,d]pyrene, and dibenz[a,h]anthracene.

9 Permit Conditions Applicable to Specific States, Indian Country Lands, or Territories

Section 401 of the CWA (see also 40 CFR §122.44(d)(3) and §124.53(a)) provides that no federal license or permit, including NPDES permits, to conduct any activity that may result in any discharge to waters of the United States shall be granted until the state/tribe in which the discharge originates certifies that the discharge will comply with the applicable provisions of sections 301, 302, 303, 306, and 307 of the CWA. The requirements under this Part of the permit provide state, U.S. territory, and tribal requirements that these entities certify are necessary in order for the permit to comply with applicable water quality requirements.

The conditions below have been incorporated into the 2021 MSGP based on the certifications granted for the 2021 MSGP. These conditions apply for activities conducted under this permit that occur within the jurisdiction that established the condition. Any references below to the "2020 MSGP," "MSGP 2020," "2020 proposed MSGP," "proposed permit," or similar refer to the final 2021 MSGP.

9.1 EPA Region 1: Connecticut, Massachusetts, Maine, New Hampshire, Rhode Island, Vermont

9.1.1 CTR05I000: Indian Country within the State of Connecticut

No additional requirements.

9.1.2 MAR050000: Commonwealth of Massachusetts, except Indian country

Operators in the Commonwealth of Massachusetts must meet the following conditions (see certification provided by the Commonwealth of Massachusetts, CWA401Cert_MA_2021 MSGP):

9.1.2.1 *Additional conditions required by the Commonwealth of Massachusetts.*

Discharges covered by the general permit must comply with the provisions of 314 CMR 3.00, 314 CMR 4.00, 314 CMR 9.00, and 310 CMR 10.00. New facilities or redevelopment of existing facilities subject to this permit must comply with applicable stormwater performance standards prescribed by state regulation. A permit under 314 CMR 3.04 is not required for existing facilities that meet state stormwater performance standards. An application for a permit under 314 CMR 3.00 is required only when required under 314 CMR 3.04(2)(b) (designation of a discharge on a case-by-case basis) or is otherwise identified in 314 CMR 3.00 as a discharge requiring a permit application. See *id.* at 1-2.

9.1.2.2 *SWPPP Availability.*

MassDEP may request a copy of the Stormwater Pollution Prevention Plan (SWPPP) at any time, and the permittee is required to submit the SWPPP to MassDEP within 14 days of such a request. MassDEP may conduct an inspection of any facility covered by this permit to ensure compliance with state law requirements, including state water quality standards. MassDEP may enforce its certification conditions. See *id.*

9.1.2.3 *New Dischargers.*

For new dischargers applying to be covered under the MSGP and proposing to discharge to Outstanding Resource Waters as identified in 314 CMR 4.00, MassDEP will require applicants to submit a copy of the Stormwater Pollution Prevention Plan (SWPPP) for review. For purposes of this review the applicant is required to submit a copy of the EPA NOI and SWPPP to MassDEP at the same time they are submitted to EPA. Instructions on how to submit these documents to MassDEP can be found here: https://www.mass.gov/how-to/wm-15-npdes-general-permit-notice-of-intent. See *id.*

9.1.2.4 *Submission of Monitoring Data.*

The results of any monitoring required by this permit that identify violations of any effluent limits or benchmarks for any parameter for which monitoring is required shall be sent to the appropriate Regional Office of MassDEP (attention: Bureau of Air and Waste). In addition, any follow-up monitoring and a description of the corrective actions required and undertaken to meet the effluent limits or benchmarks shall be sent to the appropriate MassDEP Regional Office. See *id.*

9.1.2.5 *Sector-Specific Requirements.*

The Massachusetts Coastal Zone Management Program submitted the following conditions to be included in the WQC for the 2015 permit in order to meet the Program's Consistency Review, and to remain consistent, these same requirements are included in this WQC:

a. In Sector Q [Water Transportation] add copper to the required monitoring parameters with a benchmark monitoring concentration as is included in the MSGP 2020 Table 1 of Appendix J.

b. In Sector R [Ship and Boat Building and Repair Yards] add aluminum, lead, and copper to the list of required monitoring parameters with a benchmark monitoring concentration as included in the MSGP 2020 Table 1 of Appendix J.

c. Modify the monitoring requirements for Sectors Q and R such that all four of the quarterly monitoring samples must meet the benchmarks rather than the average of the four before no further monitoring is required. See *id.* at 2.

9.1.3 <u>MAR05I000: Indian country within the Commonwealth of Massachusetts</u>

No additional requirements.

9.1.4 <u>NHR050000: State of New Hampshire</u>

Operators in New Hampshire must also meet the following conditions (see certification provided by the State of New Hampshire, CWA410Cert_NH_2021 MSGP):

9.1.4.1 *Consider Opportunities for on-site infiltration of stormwater.*

In Part 2.1.1 Control Measure Selection and Design Considerations, you are required to consider opportunities for infiltrating runoff onsite. This is encouraged, but it should only be done if consistent with the statutes and rules of the Department of Environmental Services written to protect groundwater. Infiltration best management practices are not recommended at industrial sites except in areas where industrial activities do not occur, such as at office buildings and their associated parking facilities, or in drainage areas at the facility where a certification of no exposure will always be possible [see 40CFR122.26(g)]. Other justifiable reasons for not using on-site infiltration BMP include the following:

a. The facility is located in a wellhead protection area as defined in RSA 485-C:2; or

b. The facility is located in an area where groundwater has been reclassified to GAA, GA1 or GA2 pursuant to RSA 485-C and Env-Dw 901; and

c. Any areas that would be exempt from the groundwater recharge requirements contained in Env-Wq 402, Groundwater Discharge Permit and Registration Rules (formerly Env-Ws1500), including all land uses or activities considered to be a "High-load site." See *id.at 1-5*

9.1.4.2 *Maintenance of Infiltration Best Management Practices.*

In Part 2.1.2.3 you are required to maintain control measures. In Parts 6.2.2, 6.2.5.1 and 6.5 you are required to document the location of control measures, perform inspections and maintenance, and keep records. Accordingly, the SWPPP must contain the following:

a. A description of and the location of each on-site infiltration BMP installed;

b. The maintenance procedures that will be followed to ensure proper operation, including the removal of sediment from pretreatment devices;

c. The inspection procedures that will be followed at least annually. These should include the procedures for ensuring that the stormwater being infiltrated is not exposed to industrial pollutants and the procedures for ensuring proper drainage to prevent mosquito breeding;

d. The employee name (or title of the position) who is a member of the stormwater pollution prevention team (see Part 6.2.1) who will be responsible for the maintenance required in Part 9.1.4.2.b, the inspection required in Part 9.1.4.c and any necessary corrective actions or additional implementation measures required in Part 5; and

e. Records for all maintenance performed, inspections conducted, and corrective actions taken. See *id.*

9.1.4.3 *Discontinue, Permit or Register On-site Infiltration BMP if Necessary.*

If at any time a certification of no exposure can no longer be made for any of the stormwater to be infiltrated, then the infiltration BMP must cease for that portion of the runoff or the discharge must be permitted or registered as appropriate. The following may be required:

a. Infiltration BMP that meet the definition of a Class V well or that infiltrates stormwater via a subsurface structure (i.e. concrete chambers, dry well, leach field, etcetera) will need an underground injection control (UIC) registration from NHDES; and

b. Permitting as a groundwater discharge as required in Env-Wq 402, if the stormwater will or may contain regulated contaminants.

The SWPPP must be modified immediately if new infiltration BMP are proposed or if existing infiltration BMP will cease. See *id.*

9.1.4.4 *Required NHDES notification.*

a. Notify the NHDES Groundwater Discharge Permit Coordinator immediately if you believe that any infiltration BMP may need to be permitted or registered (see Part 9.1.4.3) during the permit term.

b. Notify the NHDES Wastewater Engineering Bureau immediately of any plans to discharge any new non-stormwater discharges during the permit term. This does not include the allowable non-stormwater discharges listed in Part 1.1.3

c. Immediately notify the NHDES Drinking Water and Groundwater Bureau at (603) 271-2513 of reportable releases (e.g., spills) of extremely hazardous, hazardous substance or oil as defined in accordance with the Emergency Planning and Community Right-to-Know Act (EPCRA) that are discharged into a source of drinking water or within a source protection area. This is in addition to immediately contacting local and state emergency responders through calling 911 and (603) 271-3899 during business hours and the state police at 800 525-5555 after hours or on weekends. See *id.*

9.1.4.5 *Information That May Be Requested by NHDES.*

To ensure compliance with RSA 485-C, RSA 485-A, RSA 485-A:13, I(a), Env-Wq 400 and Env-Wq 401 the following information may be requested by NHDES. This information must be kept on site unless you receive a written request from NHDES that it be sent to the address shown in Part 9.1.4.6.

a. The site map required in Part 6.2.2, showing the type and location of all on-site infiltration BMP utilized at the facility or the reason(s) why none were installed.

b. A list of all non-stormwater discharges that occur at the facility, including their source locations and the control measures being used (see Parts 1.2.2 and 6.2.3.4).

c. A copy of the Annual Reports required in Part 7.4. See *id.*

9.1.4.6 *Where to Submit Information.*

Information submitted to NHDES must be sent to the following address:

NH Department of Environmental Services
Wastewater Engineering Bureau
Permits & Compliance Section
P.O. Box 95
Concord, NH 03302-0095

9.1.4.7 *Modification of Clean Water Act Section 401 Water Quality Certification.*

When NHDES determines that additional water quality certification requirements are necessary to the protect water quality, it may require individual dischargers to meet additional conditions to obtain or continue coverage under the MSGP. Any such conditions shall be supplied to the permittee in writing. Any required pollutant loading analyses and any designs for structural best management practices necessary to protect water quality must be prepared by a professional engineer (civil or sanitary) licensed in New Hampshire. See *id.*

9.1.5 RIR05I000: Indian country within the State of Rhode Island

No additional requirements.

9.1.6 VTR05F000: Areas in the State of Vermont subject to industrial activity by a Federal Operator

No additional requirements.

9.2 EPA Region 2: New Jersey, New York, Puerto Rico, Virgin Islands

9.2.1 PRR050000: Commonwealth of Puerto Rico

No additional requirements.

9.2.2 NYR051000: Indian country within the State of New York, except the lands of the St. Regis Mohawk Tribe

No additional requirements.

9.3 EPA Region 3: Delaware, District of Columbia, Maryland, Pennsylvania, Virginia, West Virginia.

9.3.1 DCR050000: District of Columbia

Operators in the District of Columbia must also meet the following conditions (see certification provided by the District of Columbia, CWA410Cert_DC_2021 MSGP):

9.3.1.1 *Compliance with District of Columbia Laws and Regulations.*

Discharges covered by the MSGP must comply with the District of Columbia Water Pollution Control Act of 1984, as amended, D.C. Official Code § 8-103.01 et seq.; and its implementing regulations in Title 21 Chapters 11 and 19 of the District of Columbia Municipal Regulations. See *id.* at 1-3

9.3.1.2 *No Preclusion of Responsibilities.*

Nothing in this permit will be construed to preclude the permittee of any legal action or relieve the permittee from any responsibilities, liabilities, or penalties established pursuant to District of Columbia laws and regulations. See *id.*

9.3.1.3 *Additional Reporting.*

The permittee shall report to the Associate Director, Inspection and Enforcement Division any noncompliance which may endanger health or the environment. All information shall be provided orally within 24 hours from the time the permittee becomes aware of the circumstances. See *id.*

9.3.2 DER05F000: Areas in the State of Delaware subject to industrial activity by a Federal Operator

No additional requirements.

9.4 EPA Region 4: Alabama, Florida, Georgia, Kentucky, Mississippi, North Carolina, South Carolina, Tennessee

9.4.1 ALR05I000: Indian country within the State of Alabama

No additional requirements.

9.4.2 FLRORI000: Indian country within the State of Florida

9.4.2.1 Miccosukee Tribe of Indians

Industrial stormwater discharges on the Miccosukee Tribe lands are not eligible for permit coverage under this permit. Contact the EPA Region 4 office for additional information, including available permits.

9.4.2.2 Seminole Tribe of Florida

Industrial stormwater discharges on the Seminole Tribe lands are not eligible for permit coverage under this permit. Contact the EPA Region 4 office for additional information, including available permits.

9.4.3 MSR05I000: Indian country within the State of Mississippi

No additional requirements.

9.4.4 NCR05I000: Indian country within the State of North Carolina

No additional requirements.

9.4.5 SCR05I000: Indian country within the State of South Carolina

No additional requirements.

9.5 EPA Region 5: Illinois, Indiana, Michigan, Minnesota, Ohio, Wisconsin.

9.5.1 MIR05I000: Indian country within the State of Michigan

No additional requirements.

9.5.2 MNR05I000: Indian country within the State of Minnesota

9.5.2.1 *Fond du Lac Reservation*

Operators in the Fond du Lac Reservation must also meet the following conditions (see certification provided by the Fond du Lac Reservation, CWA410Cert_Fond du Lac_2021 MSGP):

9.5.2.1.1 *Submission of SWPPP.*

A copy of the Storm Water Pollution Prevention Plan (SWPPP) must be submitted to the Office of Water Protection at least fifteen (15) days in advance of sending the

Notice of Intent to EPA. The SWPPP can be submitted electronically to richardgitar@FDLREZ.com or by hardcopy sent to:

Fond du Lac Reservation
Office of Water Protection
1720 Big Lake Road
Cloquct, MN 55720

MSGP applicants are encouraged to work with the FDL Office of Water Protection in the identification of all proposed receiving waters and selection of appropriate Best Management Practices (BMPs). See *id.* at 2-4.

9.5.2.1.2 *Submission of NOI and NOT.*

Copies of the Notice of Intent (NOI) and the Notice of Termination (NOT) must be sent to the Fond du Lac Office of Water Protection at the same time they are submitted to EPA. See *id.*

9.5.2.1.3 *Benchmark Monitoring for Turbidity.*

The Benchmark Monitoring Concentration (BMC) for Turbidity shall NOT exceed 10% of natural background as determined by the Office of Water Protection staff as measured in NTU. See *id.*

9.5.2.1.4 *Effluent Limitations.*

The Effluent Limitations for ALL sectors shall NOT exceed more than two times (2x) Fond du Lac's ambient concentrations (based upon more than 20 years of monitoring data) for the following (See *id.*):

a) Ammonia	Ambient =<0.3mg/l
b) Arsenic	Ambien =< 3.0 µg/l
c) Chromium	Ambient =< 0.8 µg/l
d) Total Phosphorus	Ambient =< 0.09 mg/l
e) Total Suspended Solids	Ambient =< 16 mg/l
f) Zinc	Ambient =< 24 mg/l

9.5.2.1.5 *Water Quality Criteria.*

All industrial activities shall be carried out in such a manner as will prevent violations of water quality criteria as stated in the Water Quality Standards of the Fond du Lac Reservation, Ordinance 12/98, as amended. This includes, but is not limited to, the prevention of any discharge that causes a condition in which visible solids, bottom deposits, or turbidity impairs the usefulness of water of the Fond du Lac Reservation for any of the uses designated in the Water Quality Standards of the Fond du Lac Reservation. These uses include wildlife, aquatic life, warm water fisheries, cold water fisheries, subsistence fishing (netting), primary contact recreation, secondary contact recreation, cultural, wild rice areas, aesthetic waters, agriculture, navigation, and commercial. See *id.*

9.5.2.1.6 *Impacts to cultural sites.*

This certification does not authorize impacts to cultural, historical, or archeological features or sites, or properties that may be eligible for such listing. See *id.*

9.5.2.2 *__Grand Portage Band of the Minnesota Chippewa Tribe__*

The following conditions apply to industrial storm water discharges into Waters of the Grand Portage Reservation (see certification provided by the Grand Portage Reservation, CWA410Cert_Fond du Lac_2021 MSGP):

9.5.2.2.1 *Definitions.*

The definitions set forth in the Grand Portage Water Resources Ordinance, as amended, ("Water Resources Ordinance") govern these certification conditions. See id. at 1,4.

9.5.2.2.2 *Water Quality Standards.*

All industrial storm water discharges authorized by this permit must comply with the Grand Portage Water Quality Standards, Applicable Federal Standards, and the Water Resources Ordinance. See id.

9.5.2.2.3 *Additional Monitoring.*

Grand Portage reserves the right to require additional monitoring of storm water discharges as determined on a case-by-case basis. If the Board determines that additional monitoring is necessary, the monitoring plan must be supplemented and incorporated into the Storm Water Pollution Prevention Plan ("SWPPP") before the SWPPP is submitted to the USEPA. Accordingly, the Board must be contacted, at the address listed below, at the onset of writing the SWPPP. See id. at 1,4.

9.5.2.2.4 *Submission of SWPPP, NOI, and NOT.*

In addition, a copy of the SWPPP, Notice of Intent ("NOI"), and Notice of Termination (NOT) (collectively the "application") must be submitted to the Board at least 30 days before submitting the NOI to USEPA. Applications should be sent to the following address:

Grand Portage Environmental Resources Board
P.O. Box 428
Grand Portage, MN 55605

9.5.2.2.5 *Additional information.*

Upon receipt of the application, the Board shall order the Grand Portage Environmental Department (Department) to conduct a technical review of the application materials. If necessary, Department staff will send a request for additional information to the applicant within 30 days of receipt of the application. See *id.* at 1,5.

9.5.2.2.6 *Preliminary coverage determination.*

After considering the application and such other information and data as the Department staff deems relevant, the Department Director will evaluate whether there is a reasonable probability that the proposed activity will violate the Grand Portage Water Quality Standards or any Applicable Federal Standards and recommend one of the following preliminary determinations:

(a) Unconditionally grant coverage under the MSGP;

(b) Grant coverage under the MSGP subject to certain conditions; or

(c) Deny coverage under the MSGP.

9.5.2.2.7 *Final coverage determination.*

Within 30 days of the Department Director's recommendation, the Board will provide public notice of the application for coverage under the MSGP and the Department Director's recommendations. Upon request, the Department will schedule a hearing as provided in 40 CFR Part 25. If, after considering the evidence provided at the hearing and the entire record, the Board determines by a preponderance of the evidence that the proposed activity will violate the Grand Portage Water Quality Standards or any Applicable Federal Standards, the Board shall deny eligibility for coverage under the MSGP, unless there is a reasonable certainty that compliance can be achieved by the applicant's adherence to reasonable conditions. If the Board finds insufficient evidence to show that the proposed activity will violate the Grand Portage Water Quality Standards or any Applicable Federal Standards, it shall approve coverage under the MSGP. See *id.*

9.5.2.2.8 *Appeals.*

Appeals related to water quality certification decisions or permits will be heard by the Grand Portage Tribal Court. See *id.*

9.5.2.2.9 *Prohibition of Discharge.*

The applicant is prohibited from discharging into the Waters of the Reservation pursuant to the MSGP unless the Board has granted coverage under the MSGP, or until the applicant has adhered to conditions required by the Board's conditional grant of coverage. See *id.*

9.5.2.2.10 *Compliance.*

The Board retains full authority provided by the Water Resources Ordinance to ensure compliance with and enforce the provisions of the Water Resource Ordinance, the Grand Portage Water Quality Standards, Applicable Federal Standards, and these certification conditions." See *id.*

9.5.3 WIR05I000: Indian country within the State of Wisconsin, except those on Bad River Band of Lake Superior Tribe of Chippewa Indians lands and on Sokaogon Chippewa Community lands

No additional requirements.

9.6 EPA Region 6: Arkansas, Louisiana, Oklahoma, Texas, and New Mexico (except see Region 9 for Navajo lands, and see Region 8 for Ute Mountain Reservation lands).

9.6.1 LAR05I000: Indian country within the State of Louisiana

No additional requirements.

9.6.2 NMR050000: The State of New Mexico, except Indian country

Operators in New Mexico must also meet the following conditions (see certification provided by the State of New Mexico, CWA410Cert_NM_2021 MSGP)**:**

9.6.2.1 *PFAS Analytes Monitoring.*

Except as specified below, all NAICS codes listed in the December 4, 2019 Advanced Notice of Proposed Rulemaking for TRI Reporting[1] and covered under this MSGP shall monitor and report PFAS in effluent once during the first year of MSGP coverage, or when the facility discharges if no discharge occurs during the first year. Samples shall be analyzed by an accredited lab for all 18 PFAS analytes using EPA Method 537.1 (EPA 2018), and the DoD Quality Systems Manual Method 5.3 (2019) as guidance. Method and analysis shall be sufficiently sensitive to evaluate the New Mexico screening level for PFOA and PFOS.

The PFAS screening level in New Mexico is indicated below. The screening level is not a standard of quality and purity for the surface waters of New Mexico but

---

[1] https://www.federalregister.gov/documents/2019/12/04/2019-26034/addition-of-certain-per--and-polyfluoroalkyl-substances-community-right-to-know-toxic-chemical

allows detection and further evaluation of the existence of PFAS in stormwater discharges to determine if more attention is warranted.

PFAS Screening Level for New Mexico*	
PFOA + PFOS	0.070 µg/L

*Concentrations of PFOA and PFOS are summed before being compared to the screening level.

If PFOA and/or PFOS are detected above the New Mexico screening level, additional monitoring and reporting shall occur annually and in accordance with the same parameters and methods as required for the first sampling event. In addition, the permittee should take corrective action and identify ways to minimize, reduce, and eliminate PFAS from the industrial activity through product substitution and/or additional best management practices and operational controls. Results of past monitoring and any corrective actions taken should be included in the Stormwater Pollution Prevention Plan (SWPPP).

The permittee shall submit monitoring results for all 18 PFAS analytes under EPA Method 537.1, as required, to NMED at the following address:

Point Source Program Manager
Surface Water Quality Bureau
New Mexico Environment Department
P.O. Box 5469
Santa Fe, NM 87502-5469

NMED may suspend the requirement to monitor and report PFAS under the following circumstances:

- If the permittee determines it is not technically practicable to measure PFAS in their stormwater discharge; or
- If additional sampling determines that it is unlikely that PFAS exist in a permittee's stormwater discharge, if the permittee provides facility data that demonstrate PFAS are unlikely to be present in the stormwater discharge, or there are no available, accredited laboratories capable of performing the required PFAS analysis; or
- If additional sampling demonstrates that the pollutant concentration is lower than the screening level or the permittee is subject to duplicative or more stringent PFAS requirements.

However, to be exempted for these reasons, the permittee must submit documentation to NMED for approval. See *id.* At 4-6.

9.6.2.2 *Benchmark Monitoring Concentrations*

The benchmark values for pollutants must be modified to reflect New Mexico WQS for the facilities in New Mexico based on water quality criteria approved in the Standards for Interstate and Intrastate Surface Waters, 20.6.4.900 NMAC. Consistent with the language in this permit, exceedances of a benchmark value, even if that value is based on New Mexico WQS, are not immediately a violation of the permit unless the permittee does not take appropriate action to improve best management practices or otherwise mitigate the discharge of the detected pollutant. A full Tier 2 Antidegradation Review (significant degradation analysis; reasonable alternatives identification; economic and social importance; etc.) does not translate to projects covered under this general permit. Therefore, this condition is necessary to ensure that New Mexico's antidegradation policy is upheld and surface waters of the state are protected from degradation. See *id.*

The following tables lay out the benchmark values that should be used for sector-specific monitoring in the MSGP.

MSGP Benchmark Values and Sources		
Most restrictive value (highlighted below) must be chosen		
Pollutant	**2020 proposed MSGP Benchmark**	**New Mexico MSGP Benchmark**
Total Recoverable Beryllium	130 µg/L	
Biochemical Oxygen Demand (5-day)	30 mg/L	
pH	6.0 – 9.0 s.u.	6.6 – 9.0 s.u.
Chemical Oxygen Demand	120 mg/L	
Total Phosphorus	2.0 mg/L	
Total Suspended Solids (TSS)	100 mg/L	
Ammonia	2.14 mg/L	
Nitrate and Nitrite Nitrogen	0.68 mg/L	
Turbidity	50 NTU	
Total Recoverable Antimony	640 µg/L	640 µg/L (dissolved)
Total Recoverable Arsenic	150 µg/L	9 µg/L (dissolved)
Total Recoverable Cadmium	1.8 µg/L	See below
Chromium (III)	570 µg/L	See below
Chromium (VI)	16 µg/L	16 µg/L (dissolved)
Total Recoverable Copper	14 µg/L	See below
Total Recoverable Cyanide	22 µg/L	5.2 µg/L
Total Recoverable Lead	8.2 µg/L	14 µg/L (dissolved)
Total Recoverable Mercury	1.4 µg/L	0.77 µg/L
Total Recoverable Nickel	47 µg/L	See below
Total Recoverable Selenium	5 µg/L	5 µg/L
Total Recoverable Silver	3.8 µg/L	See below
Total Recoverable Zinc	120 µg/L	See below

	Hardness dependent criteria - Dissolved (µg/L)						
Concurrent Hardness as $CaCO_3$, dissolved (mg/L)	**Cd**	**Cr III**	**Cu**	**Pb**	**Ni**	**Ag**	**Zn**
25	0.51	180	4	14	140	0.3	45
30	0.59	210	4	17	170	0.4	54
40	0.76	270	6	24	220	0.7	70

50	0.91	320	7	30	260	1.0	85
60	1.07	370	8	37	300	1.3	101
70	1.22	430	10	44	350	1.7	116
80	1.37	470	11	51	390	2.2	131
90	1.51	520	12	58	430	2.7	145
100	1.65	570	13	65	470	3.2	160
200	2.98	1,010	26	140	840	11	301
220	3.23	1,087	28	151	912	13	328
300	4.21	1,400	38	210	1190	21	435
400 and above	5.38	1,770	50	280	1510	35	564

9.6.2.3 *Outstanding National Resource Waters.*

Operators are not eligible to obtain authorization under this permit for stormwater discharges to outstanding national resource waters (ONRWs, also referred to as “Tier 3” waters). Although State WQS provide for temporary and short-term degradation of water quality in an ONRW under very limited circumstances, if approved by the New Mexico Water Quality Control Commission as specified at 20.6.4.8.A NMAC, the approval process required for these activities does not translate to projects covered under this general permit. This condition is necessary to ensure that no degradation is allowed in ONRWs by requiring proposed stormwater discharges to be reviewed under the individual permit process. Tier 3 waters are defined in Appendix F of the proposed permit. See *id.*

9.6.2.4 *Additional SWPPP Requirements.*

Information on how the permittee knows the groundwater or spring water is uncontaminated must be documented in the facility SWPPP.

EPA must amend the NOI to include a question for the permittee to indicate whether they anticipate to discharge groundwater or spring water from their site. The permittee must be able to indicate on the NOI: flow rate, whether the ground or spring water source is nearby potential pollutant sources, and if the ground or spring water has been tested and is not contaminated by the potential pollutant source.

If discharge of groundwater or spring water is anticipated at a facility, permittees must complete the following steps to determine if it is potentially contaminated:

a. Indicate on the NOI that dewatering activities are anticipated. Provide information on flow and potential to encounter impacted ground or spring water.

b. Refer to the Mapper tool at https://gis.web.env.nm.gov/oem and check if the following groundwater pollutant sources are located nearby the anticipated source of groundwater or spring water such that there is a potential for contamination:

Project Location Relative to a Source of Potential Groundwater Contamination	**Constituents likely to be required for testing**
Within 0.5 mile of an open Leaking Tank site	BTEX (Benzene, Toluene, Ethylbenzene, and Xylene) plus additional parameters depending on site conditions.

Within 0.5 mile of an open Voluntary Remediation site	All parameters listed in 20.6.4.900 NMAC, hardness and pH (or an alternate list approved by the NMED SWQB)
Within 0.5 mile of an open RCRA Corrective Action Site	All parameters listed in 20.6.4.900 NMAC, hardness and pH (or an alternate list approved by the NMED SWQB)
Within 0.5 mile of an open Abatement Site	All parameters listed in 20.6.4.900 NMAC, hardness and pH (or an alternate list approved by the NMED SWQB)
Within 0.5 mile of an open Brownfield Site	All parameters listed in 20.6.4.900 NMAC, hardness and pH (or an alternate list approved by the NMED SWQB)
Within 1.0 mile of a Superfund site with associated groundwater contamination.	All parameters listed in 20.6.4.900 NMAC, hardness and pH (or an alternate list approved by the NMED SWQB)
EPA approved-sufficiently sensitive methods must be used – approved methods are listed in 40 C.F.R. 136.3.	

c. If within the distances listed above, Permittee must provide test data indicating the quality of the groundwater or spring water to be discharged according to the table above.

d. Permittee must send test result data to EPA Region 6 and the NMED Surface Water Quality Bureau. If the test data exceed State WQS, the ground or spring water cannot be discharged from the facility into surface waters under this permit. Discharge to surface waters must be conducted under a separate NPDES individual permit to ensure proper treatment and disposal. If disposal will be to the ground surface or in an unlined pond, the permittee must submit a Notice of Intent to Discharge (NOI) to the NMED Ground Water Quality Bureau. For further assistance determining whether your facility may encounter impacted groundwater, the permittee may contact the NMED Ground Water Quality Bureau at (505) 827-2965.

e. Investigative information and data demonstrating that water is not contaminated must be documented in the facility SWPPP. See *id.*

9.6.2.5 *Ponds and Other Impoundments.*

Per the New Mexico Office of the State Engineer requirements[2], impoundments must drain or infiltrate within 96 hours. The facility must transfer a valid water right to impound and retain the stormwater longer than 96 hours or request a variance from the State Engineer.

If the facility intends to discharge stormwater that contains a "water contaminant" as defined in 20.6.2.7 NMAC, a State of New Mexico Notice of Intent to Discharge must

---

[2] 19.26.2.15.B NMAC PONDS AND OTHER IMPOUNDMENTS: A permit is required to capture or store surface water in an impoundment. An application to capture and store surface water shall be filed pursuant to 19.26.2.10 NMAC or 19.26.2.11 NMAC unless the impoundment of water is authorized as a livestock watering impoundment under 19.26.2.14 NMAC.

B. Flood control: No permit to appropriate water is required for an impoundment when the primary purpose of the impoundment is flood control, provided the outlet drains the impoundment (from the spillway crest) in 96 hours. The water shall not be detained in the impoundment in excess of 96 hours unless the state engineer has issued a waiver to the owner of the impoundment.

be submitted to NMED in accordance with 20.6.2.1201 NMAC **prior to discharge**. This includes infiltration of stormwater or a discharge to the ground surface that may move directly or indirectly into groundwater.

In the event impounded stormwater contains a "water contaminant" as defined in 20.6.2.7 NMAC, the stormwater must meet benchmark values in order to be discharged to a surface water of the State. See *id.*

9.6.3 NMR05I000: Indian country within the State of New Mexico, except Ute Mountain Reservation lands that are covered under Colorado permit COR05I000 and Navajo Reservation lands that are covered under Arizona permit AZR05I000

9.6.3.1 Ohkay Owingeh

Permittees in the tribe of Ohkay Owingeh must also meet the following conditions (see certification provided by the Tribe of Ohkay Owingeh, CWA410Cert_Ohkay Owingeh_2021 MSGP)**:**

9.6.3.1.1 *Submission of NOI and NOT.*

The operator(s) must provide a copy of the Notice of Intent (NOI) to the Ohkay Owingeh Office of Environmental Affairs the same day electronic confirmation is received from the U.S. Environmental Protection Agency (EPA) that the submitted NOI was certified and is undergoing its 30-day review period . Additionally, a copy of the Notice of Termination (NOT) must be provided the same day electronic confirmation is received from the EPA that the NOT has been accepted. The NOI and NOT should be provided to the address below. See *id.* at 1-2.

9.6.3.1.2 *Where to Submit Information.*

Ron Lovato, Governor
P.O. Box 1099
Ohkay Owingeh, NM 87566

governor@ohkay .org

Naomi L. Archuleta
Environmental Programs Manager
Office of Environmental Affairs, NRD Division
P.O. Box 717
Ohkay Owingeh, NM 87566

naomi.archuleta@ohkay.org

9.6.3.1.3 *SWPPP Availability.*

The operator(s) must provide an electronic copy of the Storm Water Pollution Prevention Plan(s) to the Office of Environmental Affairs by email to naomi.archuleta@ohkay.org at least 30 days prior to submitting the NOI to EPA and Ohkay Owingeh. See *id.*

9.6.3.2 *Pueblo of Isleta*

Permittees in the Pueblo of Isleta must also meet the following conditions (see certification provided by the Pueblo of Isleta, CWA410Cert_Pueblo of Isleta_2021 MSGP)**:**

9.6.3.2.1 *Water Quality Standards.*

Impacts to waters of the Pueblo of Isleta are prohibited. All lakes, rivers, streams, ditches, springs and wetlands shall be fully protected. See *id.* at 1-2.

9.6.3.2.2 *Submission of NOI.*

All discharges made pursuant to the MSGP shall be conducted in conformance with the requirements of Permit No. NMR05000, and in such a manner as will prevent violations of the Pueblo's Surface Water Quality Standards. See *id.*

9.6.3.2.3 *Submission of NOI.*

The operator(s) must provide a copy of the Notice of Intent ("NOI") to the Governor and Water Quality Control Officer the same day electronic confirmation is received by the EPA that the submitted NOI was certified and is undergoing its 30-day review period. See *id.* Additionally, a copy of the Notice of Termination ("NOT") must be provided the same day electronic confirmation is received from the EPA that the NOT has been accepted. A paper copy of the NOI and NOT should be provided to the Governor; electronic copy or URL is acceptable for submittal to the Pueblo of Isleta Water Quality Control Officer:

Governor Pueblo of Isleta
PO Box 1270
Isleta NM 87022

Water Quality Control Officer Pueblo of Isleta
Environment Department PO Box 1270
Isleta NM 87022
Ramona.Montoya @isletapueblo.com

9.6.3.2.4 *SWPPP Availability.*

The operator(s) must provide an electronic copy of its Storm Water Pollution Prevention Plan(s) ("SWPP") to the Pueblo of Isleta Environment Department by email to Ramona.Montoya@isletapueblo.com at least 30 days p1ior to submitting the NOI to EPA and the Pueblo. The Pueblo may use the EPA 30-day waiting period to determine whether any additional measures are necessary to meet applicable Tribal surface water quality standards or to comply with Tribal antidegradation requirements. See *id.*

9.6.3.3 <u>Pueblo of Laguna</u>

The following condition applies only to discharges on the Santa Ana Indian Pueblo (see certification provided by the Pueblo of Isleta, CWA410Cert_Pueblo of Laguna_2021 MSGP):

9.6.3.3.1 *Submission of NOI.*

The operator(s) must provide a copy of the Notice of Intent (NOI) to the Pueblo of Laguna's Environmental & Natural Resources Department the same day electronic confirmation is received from the U.S. Environmental Protection Agency (EPA) that the submitted NOI was certified and is undergoing its 30-day review period. Additionally, a copy of the Notice of Termination (NOT) must be provided the same day electronic confirmation is received from the EPA that the NOT has been accepted. See *id.* 1-2.

The NOI and NOT should be provided to the following address:

Pueblo of Laguna, Office of the Governor
Attn: Environmental & Natural Resources Department
P.O. Box 194 Laguna, NM 87026
Email: setter@pol-nsn.gov, cc: gjojola@pol-nsn.gov, ewoodward@pol-nsn.gov

9.6.3.3.2 *SWPPP Availability.*

The operator(s) must provide an electronic copy of the Storm Water Pollution Prevention Plan(s) to Pueblo of Laguna Environmental Program at the same time the NOI is submitted to the listed email addresses above. See *id.*

9.6.3.3.3 *Additional Correspondence.*

The Pueblo of Laguna Environmental Program shall be included on any correspondences between the applicant and the EPA related to analytical data, written reports, corrective action, enforcement, monitoring, or incident reports. See *id.*

9.6.3.3.4 *Additional Consultation.*

Immediate initiation of consultation with the Pueblo of Laguna is required should any human remains or artifacts be unearthed that fall under the Native American Graves Protection and Repatriation Act guidelines during the span of the project. If human remains are unearthed, contact the Pueblo of Laguna Police Department at 505-552-6666. If artifacts are unearthed, contact the Pueblo of Laguna Tribal Historic Preservation Office at 505-552-5033. See *id.*

9.6.3.4 Pueblo of Santa Ana

The following condition applies only to discharges on the Santa Ana Indian Pueblo (see certification provided by the Pueblo of Isleta, CWA410Cert_Pueblo of Santa Ana_2021 MSGP):

9.6.3.4.1 *Submission of NOI.*

The permittee shall provide a copy of the Notice of Intent (NOI) to the Pueblo of Santa Ana (the Pueblo), at the same time it is submitted to the U.S. Environmental Protection Agency (EPA), for projects with discharges onto the lands of the Pueblo as defined in the Pueblo's antidegradation policy within the Pueblo of Santa Ana Water Quality Standards. See *id.* at 2-3.

9.6.3.4.2 *SWPPP Availability.*

The permittee shall provide a final copy of the Stormwater Pollution Prevention Plan (SWPPP) to the Pueblo that is associated with any project identified in the NOI, at the same time that an NOI is submitted to the EPA. The SWPP should include any projects with discharges onto the lands of the Pueblo as defined in the antidegradation policy within the Pueblo of Santa Ana Water Quality Standards. See *id.*

9.6.3.4.3 *Additional Reporting.*

The permittee shall provide copies of inspections reports and of corrective action reports to the Pueblo at the address below for review, upon request. See *id.*

9.6.3.4.4 *Submission of NOT.*

Upon completion of the project identified in the NOI, the permittee will submit a Notice of Termination (NOT) to the Pueblo. See *id.*

9.6.3.4.5 *Where to Submit Information.*

All required or requested permittee specific information identified above shall be submitted to the following address:

Pueblo of Santa Ana Department of Natural
Resources, Attention: Water Resources Division
2 Dove Road
Santa Ana Pueblo, NM, 87004

9.6.3.4.6 *Additional Reporting to the Pueblo.*

Discharges are not authorized by the permittee unless an accurate and complete NOI and SWPPP have been submitted to the Pueblo. Failure to provide an accurate and complete NOI and SWPPP may result in a denial of the discharge permit, or a delay in groundbreaking or construction. See *id.*

9.6.3.4.7 *Start Work Authorization.*

The permittee will not proceed with site work until authorized by the Pueblo. The Pueblo requires review of the complete and final SWPP before authorization to proceed. The Pueblo will provide and "Authorization to Process" notice after review and approval of the SWPPP. See *id.*

9.6.3.4.8 *Additional Monitoring.*

The permittee could be required to perform water quality monitoring, sampling or analysis during the active permit dates for constituents determined by the Pueblo. See *id.*

9.6.3.4.9 *Site Stabilization.*

Before submitting a NOT, permittees must certify to the Pueblo's Department of Natural Resources in writing that requirements for site stabilization have been met, and any temporary erosion control structures have been removed. Documentation of the Pueblo's review that such requirements have been reviewed and met will be provided for the permittee to add to the permittee's NOT submission to EPA. Copies of all NOT submitted to the EPA must also be sent to the Pueblo at the address provided above. See *id.*

9.6.3.4.10 *Additional Correspondence.*

Copies of all Notifications (Notice of Intent, Notice of Termination, or other communications), associated analytical data, and written reports for actions covered under this permit occurring on Pueblo of Santa Ana lands or within five river miles of the northern exterior boundary of Pueblo of Santa Ana lands shall be provided to the Pueblo of Santa Ana Department of Natural Resources at same time they are provided to the U.S. Environmental Protection Agency.

Any correspondence between the applicant and EPA related to corrective action, enforcement, monitoring, or adverse incident written reports should likewise be routed to the Pueblo of Santa Ana Department of Natural Resources. The Pueblo of Santa Ana reserves the right to request additional information or study and may delay or deny a permit for cause. All requested materials shall be sent to: Pueblo of Santa Ana Department of Natural Resources, 2 Dove Road, Santa Ana Pueblo, NM, 87004. See *id.*

9.6.3.5 Pueblo of Santa Clara.

The following condition applies only to discharges on the Santa Clara Indian Pueblo (see certification provided by the Pueblo of Isleta, CWA410Cert_Pueblo of Santa Clara_2021 MSGP):

9.6.3.5.1 *Submission of NOI, NOT and SWPPP.*

The operator(s) provide an electronic copy of Notice of Intent (NOI) to the Santa Clara Pueblo Office of Environmental Affairs within 7 business days after electronic confirmation is received from the U.S. Environmental Protection Agency (EPA) that the submitted NOI was certified and is undergoing its 30-day review period. An electronic copy of the Notice of Termination (NOT) shall be provided to the Santa Clara Pueblo Office of Environmental Affairs within 5 calendar days after electronic confirmation is received from the EPA that the NOT has been accepted. A copy of the Storm Water Pollution Prevention Plan shall be made available to the Pueblo of Santa Clara staff upon request. *See id. 1-4.*

9.6.3.5.2 *Where to Submit Information.*

Electronic copies of all required or requested documents shall be emailed to the Santa Clara Pueblo Office of Environmental Affairs at dinoc@santaclarapueblo.org. If an electronic copy can't be provided, a hard copy may be mailed to:

Santa Clara Pueblo Governor's Office
P.O. Box 580
Espanola, NM 87532

9.6.4 OKR05I000: Indian country within the State of Oklahoma

9.6.4.1 Pawnee Nation

The following condition applies only to discharges in Pawnee Nation (see certification provided by the Pueblo of Isleta, CWA410Cert_Pawnee Nation of Oklahoma_2021 MSGP):

9.6.4.1.1 *Submission of NOI and NOT.*

The operator(s) must provide a copy of the Notice of Intent (NOI) to the Pawnee Nation the same day electronic confirmation is received from the U.S. Environmental Protection Agency (EPA) that the submitted NOI was certified and is undergoing its 30-day review period. Additionally, a copy of the Notice of Termination (NOT) must be provided the same day electronic confirmation is received from the EPA that the NOT has been accepted. Electronic copies of the NOI and NOT shall be submitted to the Pawnee Nation Department of Environmental Conservation and Safety by email to: dnrs@pawneenation.org. See *id.*

9.6.4.1.2 *SWPPP Availability.*

The operator(s) must provide an electronic copy of the Storm Water Pollution Prevention Plan(s) to the Pawnee Nation by email to Pawnee Nation Department of Environmental Conservation and Safety, dnrs@pawneenation .org at least 30 days prior to submitting the NOI to EPA and the Pawnee Nation. See *id.*

9.6.4.1.3 *Additional Reporting.*

The Pawnee Nation must be notified at 918.762.3655 immediately upon discovery of any non-compliance with any provision of the permit conditions. See *id.*

9.6.5 OKR05F000: Facilities in the State of Oklahoma not under the jurisdiction of the Oklahoma Department of Environmental Quality or the Oklahoma Department of Agriculture, Food and Forestry, except those on Indian Country. EPA jurisdiction facilities include SIC Codes 1311, 1381, 1382, 1389, and 5171

No additional requirements.

9.6.6 TXR05F000: Facilities in the State of Texas not under the jurisdiction of the Texas Commission on Environmental Quality, except those on Indian Country. EPA- jurisdiction facilities include SIC Codes 1311, 1321, 1381, 1382, and 1389 (other than oil field service company "home base" facilities)

No additional requirements.

9.6.7 TXR05I000: Indian country within the State of Texas

No additional requirements.

9.7 EPA Region 7: Iowa, Kansas, Missouri, Nebraska (except see Region 8 for Pine Ridge Reservation Lands)

9.7.1 IAR05I000: Indian country within the State of Iowa

9.7.1.1 Meskwaki Nation

The following condition applies only to discharges on the Meskwaki Nation (see certification provided by the Pueblo of Isleta, CWA410Cert_Meskwaki Nation_2021 MSGP):

9.7.1.1.1 *Document Submission.*

All original and revised documents required by this permit, including SWPPP, NOI, Change NOI, and NOT, must be submitted electronically to MNRD 30 calendar days prior to the submission deadline to EPA. Incidental reporting, such as AIM documentation and plans, must be submitted to the MNRD at the same time that they are submitted to EPA. See id. at 1-3.

9.7.1.1.2 *Monitoring Data Submission.*

All discharge monitoring data required by this permit should be submitted electronically to the Meskwaki Natural Resources Department (MNRD) at the time of submission to EPA in the same form as it is submitted to EPA. See *id.*

9.7.1.1.3 *Where to Submit Information.*

Contact the MNRD office by phone at 641-484-3511 to gather submission details. See *id.*

9.7.2 KSR05I000: Indian country within the State of Kansas

No additional requirements.

9.7.3 NER05I000: Indian country within the State of Nebraska, except Pine Ridge Reservation lands (see Region 8)

No additional requirements.

9.8 EPA Region 8: Colorado, Montana, North Dakota, South Dakota, Wyoming, Utah (except see Region 9 for Goshute Reservation and Navajo Reservation Lands), the Ute Mountain Reservation in NM, and the Pine Ridge Reservation in NE

9.8.1 COR05F000: Areas in the State of Colorado, except those located on Indian country, subject to industrial activity by a Federal Operator

No additional requirements.

9.8.2 COR05I000: Indian country within the State of Colorado, as well as the portion of the Ute Mountain Reservation located in New Mexico

9.8.2.1 Southern Ute Indian Tribe

The following condition applies only to discharges within the Southern Ute Indian Reservation (see certification provided by the Southern Ute Indian Tribe, CWA410Cert_Southern Ute Indian Tribe_2021 MSGP):

9.8.2.1.1 *Submission of SWPPP.*

The applicant must submit its Stormwater Pollution Prevention Plan (SWPPP) to the Tribe's Environmental Programs Division at the same time or

immediately after the applicant submits its Notice of Intent (NOI) to EPA. At the applicant's option, the submittal may be made electronically.

This condition must be met to give the Tribe an opportunity, in consultation with EPA, to ensure that the permittee has developed an adequate SWPPP for the facility. This is a minimum requirement for the proposed permit and a less stringent condition does not exist for the Tribe's certification. See *id.* at 1, 4-7.

9.8.2.1.2 *Submission of NOI and NOT.*

The applicant must send a copy of its Notice of Intent (NOI) and Notice of Termination (NOT) to the Tribe's Environmental Programs Division at the same time or immediately after the applicant sends those documents to EPA. At the applicant's option, the submittal may be made electronically. See *id.*

9.8.2.1.3 *Authorization to Inspect.*

The permittee shall allow employees of the Tribe's Environmental Programs Division access to inspect any facility, equipment, practices, or operations regulated or required under this permit and to access records maintained under the conditions of this permit. See *id.*

9.8.2.1.4 *Where to Submit Information*

Information submitted to the Tribe's Environmental Programs Division must be sent to the following address:

Environmental Programs Division
P.O. Box 737 MS#81 Ignacio, CO 81137
jseebach@southernute-nsn.gov

9.8.3 MTR05I000: Indian country within the State of Montana

No additional requirements.

9.8.4 NDR05I000: Indian country within the State of North Dakota, as well as that portion of the Standing Rock Reservation located in South Dakota (except for the portion of the lands within the former boundaries of the Lake Traverse Reservation which is covered under South Dakota permit SDR05I000 listed below)

No additional requirements.

9.8.5 SDR05I000: Indian country within the State of South Dakota, as well as the portion of the Pine Ridge Reservation located in Nebraska and the portion of the lands within the former boundaries of the Lake Traverse Reservation located in North Dakota(except for the Standing Rock Reservation which is covered under North Dakota permit NDR05I000 listed above)

No additional requirements.

9.8.6 UTR05I000: Indian country within the State of Utah, except Goshute and Navajo Reservation lands (see Region 9)

No additional requirements.

9.8.7 WYR05I000: Indian country within the State of Wyoming

No additional requirements.

9.9 EPA Region 9: California, Hawaii, Nevada, Guam, American Samoa, the Commonwealth of the Northern Mariana Islands, the Confederated Tribes of the Goshute Reservation in Utah and Nevada, Indian Country within the State of Arizona including the Navajo Reservation in Utah and New Mexico and Arizona, the Duck Valley Reservation in Idaho, and the Fort McDermitt Reservation in Oregon.

9.9.1 ASR050000: American Samoa

No additional requirements.

9.9.2 AZR05I000: Indian country within the State of Arizona, including Navajo Reservation lands in New Mexico and Utah

No additional requirements.

9.9.3 CAR05I000: Indian country within the State of California

9.9.3.1 Hoopa Valley Tribe

Facilities in the Hoopa Valley Tribe lands are not eligible for stormwater discharge coverage under this permit. Contact the EPA Region 9 office for an individual permit application.

9.9.3.2 Morongo Band of Mission Indians

The following condition applies only to discharges in the Indian country of the Morongo Band of Mission Indians (see certification provided by the Morongo Band of Mission Indian, CWA410Cert_Morongo Band of Mission Indians_2021 MSGP):

9.9.3.2.1 *Compliance with Local Law.*

This certification does not exempt, and is provisional upon compliance with, other applicable statutes and codes administered by Federal and Tribal agencies. Pursuant to the Morongo Band of Mission Indians Surface Water Quality Protection Ordinance (Ordinance 39), all unpermitted discharges must be reported to the Morongo Band of Mission Indians Environmental Protection Department within 24 hours of the incident. See *id.* at 1.

9.9.3.2.2 *Submission of NOI and SWPPP.*

Each operator shall submit copies of the Notices of Intent (NOI) and Stormwater Water Pollution Plans (SWPPPs) to the Morongo Environmental Protection Department at the same time they are submitted to EPA. See *id.*

9.9.3.2.3 *Additional Reporting.*

All monitoring data and exceedance reports shall be provided to the Morongo Environmental Protection Department. See *id.*

9.9.3.2.4 *Where to Send Information.*

All required or requested documents should be submitted to:

Morongo Band of Mission Indians
Environmental Protection Department 12700 Pumarra Road
Banning, CA 92220
Or electronically at epd@morongo-nsn.gov

9.9.3.3 Twenty-Nine Palms Band of Mission Indians

The following condition applies only to discharges in the Indian country of the Twenty-Nine Palms Band of Mission Indians (see certification provided by the Twenty-Nine Palms Band of Mission Indians, CWA410Cert_Twenty-Nine Palms Band of Mission Indians_2021 MSGP):

9.9.3.3.1 *Submission of NOI*

Tribal EPA must receive written notification of the intent to discharge, and must be afforded the opportunity to evaluate whether the specific pollutant discharge proposed will violate TWQS prior to EPA granting the permit. See *id.* at 1-2

9.9.3.3.2 *Reporting*

Permitted entities under the MSGP must keep Tribal EPA informed of authorized discharges under the MSGP by submitting written information about the type, quantity, frequency and location, intended purpose, and potential human health and/or environmental effects of their activities. These requirements are pursuant to Article 4 of the Twenty-Nine Palms Band of Mission Indians Water Pollution Control Ordinance {022405A). This information may be submitted to Tribal EPA in the form of Storm Water Pollution Prevention Plans (SWPPPs}, monitoring reports, or other reports as required under the MSGP. Spills, leaks, or unpermitted discharges must be reported in writing to Tribal EPA within 24 hours of the incident. See *id.*

9.9.4 GUR050000: Island of Guam

The following condition applies only to discharges in Guam (see certification provided by the Island of Guam, CWA410Cert_Guam_2021 MSGP):

9.9.4.1 *General Conditions*

a. A1. For purposes of this Order, the term '"Applicant" shall mean U.S. Environmental Protection Agency, and its agents, assignees, and contractors.

b. A2. For purposes of this Order, the permit "Permittee" shall mean any facility granted coverage under EPA's 2020 Multi-Sector General Permit.

c. A3. The Applicant shall enforce the proposed 2020 MSGP and ensure that the Permittee complies with the conditions of the permit at all times.

d. A4. Nothing in this Order waives Guam EPA's authority to issue additional orders if Guam EPA determines that further actions are necessary to implement Guam water quality laws, or if additional conditions are necessary to further protect water quality.

e. A5. In the event of changes or amendments to GWQS, or changes in or amendments to the Guam Water Pollution Control Act or the federal Clean Water Act, Guam EPA may issue an amendment to this Order to incorporate any such changes or amendments applicable to the proposed 2020 MSGP.

f. A6. Failure of any person or entity to comply with this Order may result in the issuance of civil penalties or other actions, whether administrative or judicial, to enforce the terms of this Order.

g. A7. All submittals required by this Order shall be sent to the Guam Environmental Protection Agency Attn: 401 Federal Permit Manager, Non-Point Source Program, EMAS Division, 3304 Mariner Avenue, Bldg. 17-3304, Barrigada, Guam 96913, AND via email to jesse.cruz@epa.guam.gov. *The submittals shall be identified with WQC Order #2020-10 and include the MSGP Permit Number, certifying representative's name, title, mailing address and phone number.*

h. A8. This condition is specific to Sector J. Mineral Mining and Dressing covered by the proposed 2020 MSGP: Prior to any earth moving activities, a Clearing and Grading or Building Permit, shall be approved by Guam EPA. Sediment control designs and erosion control Best Management Practices (BMPs) must meet the design standard criteria required in the CNMI and Guam Stormwater Management Manual (October 2006) and in the Guam Soil Erosion and Sediment Control Regulations.

i. A9. This condition is specific to section 2.1 Control Measures of the proposed 2020 MSGP: The selection and installation of stormwater control measures shall meet the design criteria and standards in the CNMI and Guam Stormwater Management Manual (October 2006) and the Guam Soil Erosion and Sediment Control Regulations.

j. AIO. A signed copy of the Notice of Intent (NOi), Stormwater Pollution Prevention Plan (SWPPP), and Notice of Termination (NOT) shall be submitted to Guam EPA, consistent with condition A7, at the same time it is submitted to U.S. EPA for review and approval. Coordination with Guam EPA is encouraged when the receiving water(s) for the proposed stormwater discharge is/are being identified.

k. A11. The coordinates and location of any proposed discharge outfall(s) shall be submitted to Guam EPA for review and approval, consistent with condition A7. Specific discharge information shall also be submitted.

l. Al2. The NOT application shall be submitted to Guam EPA for review and approval prior to submittal to U.S. EPA, consistent with condition A7. Guam EPA may conduct inspections to ensure that conditions of termination have been met and sources of pollutants have been removed or adequately mitigated. Guam EPA may advise U.S. EPA as to findings and recommendations concerning the Permittee's proposed termination of permit coverage.

m. A13. A copy of all final and local permits shall be provided to Guam EPA within two weeks of receipt, consistent with condition A7.

n. A14. Reports, monitoring and analytical data (e.g. Discharge Monito ring Reports (DMRs), follow-up monitoring reports, Exceedance Reports for Numerical Effluent Limits. etc.) submitted to EPA shall be concurrently submitted to Guam EPA, consistent with condition A7.

o. A 15. A copy of the MSGP, SWPPP, and NOI shall be on file at the Permittee and readily accessible.

p. A16. Guam EPA shall be allowed access to any MSGP industrial facility and mitigation sites at any reasonable time to perform compliance inspections, monitoring, necessary data collection, and/or to ensure that discharge is not in violation of permit conditions, the Guam Water Pollution Control Act, GWQS, or any applicable Guam laws and/or regulations.

q. A17. This Order does not authorize direct, indirect, permanent, or temporary impacts to waters under Guam EPA's jurisdiction (including wetlands) or related aquatic resources, except as specifically provided for in conditions of this Order.

r. A18. A signed Statement of Understanding of Water Quality Certification Conditions shall be submitted to Guam EPA (see Attachment A for an example) per condition A7. See *id.* at 1-3.

9.9.4.2 *Water Quality Conditions*

a. Stormwater discharges to waterbodies under the jurisdiction of Guam EPA must be consistent with the antidegradation policy in 22GAR §510l(b).

b. B2. All discharges shall comply with the Guam Water Pollution Control Act (10 GCA Chapter 47) and implementing regulations at 22 GAR Chapter 5 (GWQS) and 22 GAR Chapter 10 (Guam Soil Erosion and Sediment Control (SESC) Regulations). Furthermore, nothing in this Order shall absolve the Permittee from liability for contamination and any subsequent cleanup of marine waters, surface waters, ground waters, or sediments occurring as a result of proposed 2020 MSGP stormwater discharges.

c. B3. 2020 MSGP industrial stormwater discharges are prohibited as follows:

    i. In Marine Waters, Category M-1 Excellent (22 GAR Chapter 5 §5102(b)(1)); and

    ii. In Surface Waters, Category S-1 High (22 GAR Chapter 5 §5102(c)(l)).

d. B4. All point source discharges to Guam's waters will be controlled (permitted) through the Federal NPDES, or through the Guam Environmental Protection Agency's local permit program, consistent with the requirements of these programs. 22 GAR Chapter 5 §5104(a)(l2)

e. B5. Dewatering is not permitted under this certification. Dewatering activities shall require a separate Dewatering Permit from the Agency prior to any dewatering activity.

f. B6. Mitigation and/or additional monitoring may be required if site inspections indicate water quality standards have not been met. See *id.*

EMERGENCY/CONTINGENCY MEASURES:

g. B7. The Permittee shall develop and implement a Spill Prevention and Containment Plan.

h. B8. The Permittee shall have adequate and appropriate spill response materials on hand to respond to emergency release of oil, petroleum or any other material into waters of the territory.

i. B9. Any unpermitted discharge into territorial waters or onto land with a potential for entry into territorial waters, is prohibited. If this occurs, the Permittee shall immediately take the following actions:

    i. Cease operations at the location of the violation or spill.

    ii. Assess the cause of the water quality problem and take appropriate measures to correct the problem and/or prevent further environmental damage.

    iii. Notify Guam EPA of the failure to comply. All petroleum spills shall be reported immediately to:

        1) Guam's Emergency 911 system

        2) Guam EPA's 24-Hour Spill Response Team at (67 l) 888-6488 or during working hours (67 J) 300-475l

        3) U.S. Coast Guard Sector Guam (671) 355-4824

        4) National Response Center 1-800-424-8802

    iv. Submit a detailed written report to Guam EPA within five days of noncompliance that describes the nature of the event, corrective action taken and/or planned, steps to be taken to prevent a recurrence, results of any samples taken, and any other pertinent information. See *id.*

j. B10. Compliance with this condition does not relieve the Permittee from responsibility to maintain continuous compliance with the terms and conditions of this Order or the resulting liability from failure to comply. See *id.*

k. B11. Submittal or reporting of any of this information does not provide relief from any subsequent enforcement actions for unpermitted discharges to waters of the United States. See *id.*

9.9.4.3 *Timing Requirements*

a. CI. This Order is valid for five (5) Years from Date of Certification, unless otherwise approved by the Guam EPA Administrator. See *id.*

b. C2. The Permittee shall be required to adhere to the current Guam Coral Spawning Moratorium dates for both hard and soft corals where in-water activities may impair water quality. These dates can be obtained from the Guam Department of Agriculture, Division of Aquatic and Wildlife Resources, or the NOAA NMFS Pacific Islands Regional Office Habitat Conservation Division. See *id.*

9.9.4.4 *Reporting and Notification Requirement Conditions*

a. DI. The Permittee shall provide notice to Guam EPA consistent with Condition A7: Immediately upon discovery of noncompliance with the provisions of this Order.

b. D2. A Notice of Violation/Work Stop Order will be issued if certification conditions are not adhered to or when significant or sustained water quality degradation occurs. Work or discharge shall be suspended or halted until the Permittee addresses environmental problems/concerns to Guam EPA's satisfaction. Guam EPA may also levy penalties and fines (IO GCA §47111). Invalidity or enforceability of one or more provisions of this certification shall not affect any other provision of this certification. See *id.*

9.9.4.5 *Right to Appeal*

You have a right to appeal this Order to the Guam EPA Board of Directors, or request a hearing within 30 days of the date of receipt of this Order. Failure to appeal this Order constitutes a waiver of your right to a hearing. Any appeal will proceed pursuant to the provisions of 5 GCA Chapter 9, as provided by 22 GAR §5 l06(i)(7). Unless a written request for a hearing, signed by or on behalf of the person named as Applicant in the accompanying order, is delivered or mailed to the agency within 30 days after this order is signed, Guam EPA may proceed upon the Notice of Intent to Appeal without a hearing. The request for hearing may be made by delivering or mailing the enclosed form entitled Notice of Intent to Appeal (Appendix B) as provided in §9205 to the address below.

To appeal you must do both of the following within 30 days of the date of receipt of this Order:

a. File your appeal and a copy of this Order with the Guam EPA Board of Directors (see address below). Filing means actual receipt by the Guam EPA Board of Directors during regular business hours.

b. Serve a copy of your appeal and this Order to the Administrator in paper form - by mai1 or in person at the address below. Email or facsimile is not accepted. See *id.*

9.9.4.6 *Address Information*

GUAM EPA Board of Directors
3304 Mariner Avenue, Bldg. 17 - 33 04, Barrigada, Guam 96913

9.9.5 <u>JAR050000: Johnston Atoll</u>

No additional requirements.

9.9.6 <u>MWR050000: Midway Island and Wake Island</u>

No additional requirements.

9.9.7 <u>MPR050000: Commonwealth of the Northern Mariana Islands</u>

No additional requirements.

9.9.8 <u>NVR05I000: Indian country within the State of Nevada, including the Duck Valley Reservation in Idaho, the Fort McDermitt Reservation in Oregon and the Confederated Tribes of the Goshute Reservation in Utah</u>

No additional requirements.

9.10 <u>Region 10: Alaska, Idaho (except see Region 9 for Duck Valley Reservation lands), Oregon (except see Region 9 for Fort McDermitt Reservation), Washington</u>

9.10.1 AKR05F000: Areas in the Denali National Park and Preserve subject to industrial activity by a Federal Operator

No additional requirements.

9.10.2 AKR05I000: Indian country lands as defined in 18 U.S.C 1151 within the State of Alaska

No additional requirements.

9.10.3 IDR050000: The State of Idaho, except Indian country lands

Operators in the State of Idaho must meet the following conditions (see certification provided by the State of Idaho, CWA410Cert_ID_2021 MSGP).

9.10.3.1 *Numeric Benchmarks and Effluent Limitations*

Due to the discrete and relatively short duration of storm events that would result in discharges under this MSGP, DEQ believes it is appropriate to set numeric benchmarks and effluent limits based on acute aquatic life criteria rather than chronic aquatic life criteria or human health criteria, which are based on longer-term exposures. See *id.* at 1-7.

pH - The 2020 MSGP proposes a universal pH benchmark range of 6.0-9.0 standard units, which does not comply with Idaho WQS (IDAPA 58.01.02.250.01.a). Therefore, numeric effluent limitations and benchmark monitoring cutoff concentrations for pH shall be 6.5-9.0 standard units.

Total Arsenic - The 2020 MSGP proposes a total arsenic effluent limitation (Subsector G & Sector K) of 1.1 mg/L, which exceeds Idaho's acute and chronic criteria of 0.34 mg/L and 0.15 mg/L, respectively. Given that storms are discrete events of relatively short duration, DEQ believes it is more appropriate to use the acute water quality criteria as benchmark values; therefore, DEQ will require the total arsenic effluent limit to be set equal to Idaho's acute criterion of 0.34 mg/L.

Total Zinc - The 2020 MSGP proposes a monthly average maximum numeric effluent limit for zinc of 0.535 mg/L for Sector K, which will only comply with water quality standards when hardness is greater than 535 mg/L. Similarly, the proposed maximum daily limit and the monthly average maximum limit for zinc is 0.2 mg/L and 0.11 mg/L, respectively for Sector L; these limits do not generally comply with WQS when hardness values for the receiving water are less than 130 mg/L and 85 mg/L, respectively. Therefore, DEQ will require that the total zinc effluent limit be hardness based for all sectors requiring zinc effluent limits, including Sectors K and L.

Cadmium – The 2020 MSGP proposes hardness-based numeric benchmarks for cadmium based on EPA’s 2016 Aquatic Life Ambient Water Quality Criteria for Cadmium. Idaho adopted state- specific cadmium criteria different from EPA’s recommended national criteria; therefore, DEQ will require that cadmium benchmarks for all sectors subject to cadmium benchmarks be based on Idaho’s hardness-based acute cadmium criterion, using the following table:

Freshwater Hardness Range (mg/L)	Cadmium Benchmark (µg/L)
0-24.99	0.20
25-49.99	0.42

50-74.99	0.75
75-99.99	1.05
100-124.99	1.34
125-149.99	1.62
150-174.99	1.88
175-199.99	2.14
200-224.99	2.39
225-249.99	2.64
>250	2.89

Chromium III – The 2020 MSGP proposes a benchmark Chromium III concentration of 570 µg/L. However, this concentration will only comply with Idaho WQS when hardness is 100 mg/L or greater. Therefore, DEQ will require that Chromium III benchmarks be based on the hardness-based acute Chromium III criterion, using the following table:

Freshwater Hardness Range (mg/L)	Chromium III Benchmark (µg/L)
0-49.99	183
50-74.99	323
75-99.99	450
100-124.99	570
125-149.99	684
150-174.99	794
175-199.99	901
200-224.99	1005
225-249.99	1107
>250	1207

Total Recoverable Copper – The 2020 MSGP proposes hardness-based numeric benchmarks for copper. However, Idaho water quality standards require that copper criteria be derived using the Biotic Ligand Model (BLM). In order to ensure compliance with the copper BLM criteria, the permittee for each facility subject to copper benchmarks in the 2020 MSGP must implement one of the following options:

a. Utilize a numeric benchmark for copper that corresponds to the most conservative estimate of acute copper criteria for Idaho waters: 1.0 µg/L; or

b. Collect BLM input parameters as described in IDAPA 58.01.02.210.03.c concurrent with quarterly benchmark monitoring, use the BLM to derive an acute copper criterion based on these data, and apply that BLM-derived criterion as the numeric copper benchmark; or

c. Make a written application for, and obtain DEQ approval of, a numeric copper benchmark that is protective of aquatic life in the receiving waters before discharging under the 2020 MSGP. See *id.*

9.10.3.2 *Monitoring of Discharges to Impaired Waters*

The proposed 2020 MSGP does not require monitoring on impaired waters where no pollutant has been identified as the cause of impairment. For water bodies included on the state's 303(d) list (Category 5 of the Integrated Report) as "cause unknown," or "combined biota/habitat assessments" the permittee must monitor for suspected pollutants listed in the cause comments section of the integrated report (e.g., nutrients, metals, pesticides). See *id.*

9.10.3.3 *New or Expanding Discharges*

New dischargers or existing dischargers wishing to expand their discharge to high-quality waters are only eligible for coverage under the MSGP if the discharger establishes, to the satisfaction of EPA and DEQ, that the new or expanded discharge will not result in an increase in the concentration of pollutants relevant to the use for which the water is considered high quality, or that the increase constitutes insignificant degradation as defined in the WQS (IDAPA 58.01.02.052.08.a).

A new discharger or an existing discharger wishing to expand must include an analysisregarding whether the new or expanded discharge will cause an increase in the pollutants relevant to the use for which the water is considered high quality. If there is an increase, the permittee must identify whether that increase constitutes insignificant degradation in the NOI, or in the planned changes report. These NOIs and planned changes reports must be submitted to both EPA and DEQ.

If DEQ determines the new discharge or planned changes of an existing discharger will result in significant degradation, the permittee must provide to DEQ an alternatives analysis (IDAPA 58.01.02.052.08.c), a socioeconomic justification (IDAPA 58.01.02.052.08.d) and information regarding other source controls (IDAPA 58.01.02.052.08.b), and obtain DEQ's approval in accordance with Idaho's antidegradation implementation process (IDAPA 58.01.02.052.08.e). See *id.*

9.10.3.4 *Outstanding Resource Waters.*

Any permittee proposing to discharge to an outstanding resource water shall not be covered under this General Permit (Permit Part I.E.8) and is required to apply for an individual IPDES permit from DEQ (IDAPA 58.01.02.052.09). See *id.*

9.10.3.5 *Sector L – Stormwater and Leachate*

Stormwater entering a landfill, including runoff from areas that have received daily cover which may have contacted waste material, must be managed as leachate and is thus not eligible for coverage under the MSGP (40 CFR 258.26(a)(2); Municipal Solid Waste Landfill Criteria Technical Manual, EPA 530-R-93-017, 1998). Stormwater from a closed landfill or from areas of the landfill that have received final cover is not leachate and may be covered under the MSGP. See *id.*

9.10.3.6 *Stormwater Pollution Prevention Plan (SWPPP) Availability.*

If requested by DEQ, the permittee must submit a copy of the SWPPP to DEQ within 14 days of the request. See *id.*

9.10.3.7 *Reporting of Discharges Containing Hazardous Materials or Petroleum Products.*

Any spill of hazardous materials must be immediately reported to the State Communications Center by calling 1-800-632-8000 or 208-846-7610.

Spills must also be reported to the appropriate DEQ Regional Office (Table 1). Spills of petroleum products that exceed 25 gallons or that cause a visible sheen on surface waters should be reported to DEQ within 24-hours. Petroleum product spills of less than 25 gallons or spills that do not cause sheen on surface waters must only be reported to DEQ if clean-up cannot be accomplished within 24-hours (IDAPA 58.01.02.850, 58.01.02.851, 58.01.02.852). See *id.*

9.10.3.8 *Other Reporting Requirements*

Copies of the following information must be sent to the appropriate DEQ Regional Office:

a. Notices of Intent and Termination (NOIs and NOTs), as required by Permit Part 7.2.1

b. Monitoring data collected pursuant to Permit Part 4 of the MSGP, as well as any additional monitoring required by this § 401 water quality certification

c. Exceedance Reports, as required by Permit Part 7.5

d. Planned Changes Reports, as required by Permit Parts 7.6.4 and 7.6.5

Both monitoring data and exceedance reports must be sent to the appropriate DEQ Regional Office within 30 days of receipt of the analytical results. DEQ Regional Office contact information is listed in Table 1. See *id.*

9.10.3.9 *Material Modifications*

Pursuant to 33 U.S.C. § 1341, this certification is conditioned upon the requirement that any material modification of the permit or the permitted activities—including without limitation, significant changes to the MSGP, any modifications of the permit to reflect new or modified TMDLs, wasteload allocations, site-specific criteria, variances, or other new information—shall first be provided to DEQ for review to determine compliance with Idaho WQS and to provide additional certification pursuant to Section 401. See *id.*

9.10.3.10 *Alternative Limitations*

The following condition in the MSGP can be made less stringent and still comply with WQS:

Benchmark Values

The benchmark value for arsenic is 150 µg/L. This value is equivalent to Idaho's chronic water quality criterion. Given that storms are discrete events of relatively short duration, DEQ believes it is more appropriate to use the acute water quality criterion as a benchmark value. Therefore, the benchmark value for arsenic can be set equal to 340 µg/L, and still comply with Idaho WQS. See *id.*

9.10.3.11 *Idaho DEQ Regional and State Office Contacts.*

Table 1. Idaho DEQ regional and state office contacts.

Regional and State Office	***Address***	***Phone Number***	***Email***
Boise	1145 N. Orchard St., Boise 83706	208-373-0550	kati.carberry@deq.idaho.gov
Coeur d'Alene	2110 Ironwood Parkway, Coeur d'Alene 83814	208-769-1422	chantilly.higbee@deq.idaho.gov
Idaho Falls	900 N. Skyline Dr., Suite B, Idaho Falls 83402	208-528-2650	troy.saffle@deq.idaho.gov
Lewiston	1118 F St., Lewiston 83501	208-799-4370	sujata.connell@deq.idaho.gov
Pocatello	444 Hospital Way, #300, Pocatello 83201	208-236-6160	lynn.vanevery@deq.idaho.gov
Twin Falls	650 Addison Avenue West, Suite 110, Twin Falls 83301	208-736-2190	sean.woodhead@deq.idaho.gov
State Office	1410 North Hilton St., Boise 83706	208-373-0502	jason.pappani@deq.idaho.gov

9.10.4 IDR05I000: Indian country lands within the State of Idaho, except Duck Valley Reservation lands, which are covered under Nevada permit NVR05I000

9.10.4.1 Shoshone-Bannock Tribes

The following conditions apply only to discharges to waters of the Shoshone-Bannock Tribes (see certification provided by the Shoshone-Bannock Tribes, CWA410Cert_Shoshone-Bannock Tribes_2021 MSGP):

9.10.4.1.1 *Submission of NOI, Monitoring Data, and Reports.*

Copies of the following information must be sent to the SBT-WRD:

- Notice of Intents (NOI)
- Monitoring data collected pursuant to section 4.2 of the MSGP
- Exceedance Reports

The monitoring data and exceedance reports must be sent to the SBT-WRD within thirty (30) days of receipt of analytical results. See *id* at1-3.

Contact information for SBT-WRD:

Shoshone-Bannock Tribes Water Resources Department
PO Box 306 Pima Drive
Fort Hall, ID 83203
Phone: (208) 239-4582
Fax:(208)239-4592

9.10.4.1.2 *SWPPP Availability.*

If requested by the SBT-WRD, the permittee must submit a copy of the SW PPP to SBT-WRD within fourteen (14) days of the request. See *id.*

9.10.5 ORR05I000: Indian country lands within the State of Oregon, except Fort McDermitt Reservation lands, which are covered under Nevada permit NVR05I000

No additional requirements.

9.10.6 WAR05I000: Indian country lands within the State of Washington

9.10.6.1 Confederated Tribes of the Colville Reservation

No additional requirements.

9.10.6.2 Lummi Nation

No additional requirements.

9.10.6.3 Puyallup Tribe of Indians

No additional requirements.

9.10.6.4 Port Gamble S'Klallam Tribe

The following conditions apply only to discharges to waters of the Port Gamble S'Klallam Tribal Land (see certification provided by the Port Gamble S'Klallam Tribe, CWA410Cert_Port Gamble S'Klallam Tribe_2021 MSGP):

9.10.6.4.1 *Compliance with Port Gamble S'Klallam Tribe Water Quality Standards.*

Each operator shall be responsible for achieving compliance with the Port Gamble S'Klallam Tribe Water Quality Standards for Surface Waters. Please see the PGST website (pgst.nsn.us) to review a copy of the Port Gamble S'Klallam Tribe Water Quality Standards for Surface Waters See *id.* at 1.

9.10.6.4.2 *Submission of SWPPP*

Each operator shall develop and submit a Storm Water Pollution Prevention Plan to the Port Gamble S'Klallam Natural Resources Department for review and approval by the Tribe prior to beginning any discharge activities. See *id.*

9.10.6.4.3 *Submission of NOI, Reports, and NOT*

Each operator shall submit a copy of the Notice of Intent, analytical monitoring results, any Exceedance Reports, Annual Reports, and Notice of Termination to the PGST Natural Resources Department at the same time it is submitted to the Environmental Protection Agency (EPA). See *id.*

9.10.6.5 Spokane Tribe of Indians

The following conditions apply only to discharges to waters of the Spokane Tribal Land (see certification provided by the Spokane Tribe of Indians, CWA410Cert_Spokane Tribe of Indians_2021 MSGP):

9.10.6.5.1 *Compliance with Water Quality Standards.*

The permitee shall be responsible for achieving compliance with the Spokane Tribal Water Quality Standards. See *id.* at 1.

9.10.6.5.2 *Submission of SWPPP*

The permitee shall submit all Pollution Prevention Plans to the Spokane Tribal Water Control Board for review and approval at the same time they are submitted to EPA and prior to any discharge activities. See *id.*

9.10.6.5.3 *Compliance with IRMP*

The permitee shall comply with all Spokane Tribal Integrated Resource Management Plan (IRMP) guidelines for land use activities and disturbances. See *id.*

9.10.6.5.4 *Inspection.*

The permitee shall allow the Tribal Water Control Board to inspect the storm water management system and adopt recommendations made anytime throughout its operation. See *id.*

9.10.6.5.5 *Monitoring,*

Monitoring of the discharge shall occur at a level indicated by EPA, the Tribe, are subject to change, and shall be submitted to both entities. See *id.*

9.10.6.5.6 *Where to send information.*

Water Control Board c/o Brian Crossley
PO Box 480
Wellpinit, WA 99040

9.10.6.6 Swinomish Indian Tribal Community

Facilities in the Swinomish Indian Tribal lands and are not eligible for stormwater discharge coverage under this permit. Contact the EPA Region 10 office for an individual permit application.

9.10.6.7 Tulalip Tribes

The following conditions apply only to discharges to waters of the Tulalip Tribes (see certification provided by the Tulalip Tribes, CWA410Cert_Tulalip Tribes_2021 MSGP):

9.10.6.7.1 *Submission of NOI, NOT and No Exposure.*

Copies of the Notice of Intent (NOI), Notice of Termination (NOT), and No Exposure Certification shall be submitted to the Tribe's Natural Resources Department. See *id.* at 1-2.

9.10.6.7.2 *Submission of SWPPP.*

A copy of the Stormwater Pollution Plans (SWPPPs) shall be submitted to the Tribe's Natural Resources Department at least thirty (30) days in advance of submitting the NOI to EPA. See *id.*

9.10.6.7.3 *Compliance with Tribe's Water Quality Standards:*

Each permittee shall be responsible for achieving compliance with the Tribe's Water Quality Standards. See *id.*

9.10.6.7.4 *Submission and approval of Monitoring Plans.*

A monitoring plan, if applicable, shall be submitted to the Tribe's Natural Resources Department and approved by the Tribe prior to initiation of monitoring required under Part 6 of this permit. See *id.*

9.10.6.7.5 *Submission of Monitoring Data and Reports:*

The results of any monitoring required by this permit and reports must be sent to the Tribe's Natural Resources Department, including a description of the corrective actions required and undertaken to meet effluent limits or benchmarks (as applicable). See *id.*

9.10.6.7.6 *Authorization to Inspect.*

The Natural Resources Department staff may conduct an inspection of any facility covered by this permit to ensure compliance with tribal water quality standards. The Department may enforce its certification conditions.

The Tulalip Tribes are federally recognized successors in the interest to the Snohomish, Snoqualmie, Skykomish, and other allied tribes and bands signatory to the Treaty of Point Elliott. See *id.*

9.10.6.7.7 *Incorporation by reference.*

This certification does not exempt the applicant from compliance with other statues and codes administered by the Tribes, county, state and federal agencies. See *id.*

9.10.6.7.8 *Invalidation.*

This certification will cease to be valid if the project is constructed and/or operated in a manner not consistent with the project description contained in the permit. This certification will also cease to be valid and the applicant must reapply with an updated application if information contained in the permit is voided by subsequent submittals. See *id.*

9.10.6.7.9 *Modification.*

Nothing in this certification waives the Tulalip Tribes of Washington’s authority to issue modifications to this certification if additional impacts due to operational changes are identified, or if additional conditions are necessary to protect water quality or further protect the Tribal Communities interest. See *id.*

9.10.6.7.10 *Permits on-site.*

A copy of the permit shall be kept on the job site and readily available for reference by the construction supervisor, construction managers and site foreman, and Tribal inspectors. In addition, a sign of permit coverage needs to be posted at a safe, publicly accessible location. See *id.*

9.10.6.7.11 *Project Management.*

The applicant shall ensure that project or site managers, construction managers and site foreman, and other responsible parties have read and understand conditions of the permit, this certification, and other relevant documents, to avoid violations or noncompliance with this certification. See *id.*

9.10.6.7.12 *Emergencies/Contingency Measures.*

In the event the operator or applicant is unable to comply with the permit terms and conditions due to any cause, the operator or applicant shall immediately take action to stop the violation and correct the problem, and immediately report spill events to EPA’s 24-hour Spill Response Team at (206) 553-1263 and the Tulalip Tribes Police Department (360) 716-5959. Compliance with this condition does not relieve the applicant from responsibility to maintain continuous compliance with the terms and conditions of this certification or the resulting liability from failure to comply. See *id.*

9.10.6.7.13 *Tribal ESA Consultation.*

Consultation with the Tribes is required when permitted actions may effect federally-listed threatened or endangered species and designated critical habitat. Information required as part of the consultation shall include:

a. Basis of the determination that permit actions will not adversely affect federally-listed as endangered or threatened ("listed") under the Endangered Species Act (ESA) and will not result in the adverse modification or destruction of designated critical habitat including appropriate measures to be undertaken to avoid or eliminate the likelihood of adverse effects (under Criterion E in Section 1.1.4.5); and

b. Notice of Intent form complete with extent of action area, list of federally-listed threatened or endangered species or designated critical habitat likely to occur in action area, list of potential pollutants (if you are a new discharger) or list of pollutants for which you have ever exceeded an applicable benchmark or effluent limitations guideline, or for which your discharge has ever been found to cause or contribute to an exceedance of an applicable water quality standard (if you are an existing discharger). See *id.*

9.10.6.7.14 *Discharges to CERCLA Sites:*

This permit does not authorize direct discharges to certain sites undergoing remedial cleanup actions pursuant to the Comprehensive Environmental Response,

Compensation and Liability Act (CERCLA) unless first approved by the appropriate EPA Regional office. In the case of the Tulalip Landfill site, the Tulalip Tribes also requests notification by the facility and consultation with EPA prior to discharge. Contaminants at this site may include but are not limited to: dioxins, furans, arsenic, copper, lead, zinc, 4-methyl-phenol, Hex-CB, HPAHs, PCBs, PCE, cadmium, mercury, and LPAHs. See *id.*

9.10.6.7.15 *Discharge-related Activities that have Potential to Cause an Adverse Effect on Historic Properties:*

Installation of stormwater controls that involve subsurface disturbances may potentially have an adverse impact on historic properties. Procedures detailed in Appendix F of the permit shall be completed. Richard Young, of the Tulalip Tribe's Cultural Resources Department shall be contacted prior to initiating discharge-related activities that may have an impact on historic properties. His contact information is (360) 716-2652 and ryoung@tulaliptribes-nsn.gov. See *id.*

9.10.6.7.16 *Where to Submit Information:*

All required or requested documents shall be sent to the:

Tulalip Tribes
Natural Resources Environmental Division c/o Kurt Nelson and Valerie Streeter
6704 Marine Drive
Tulalip, Washington 98271

9.10.7 WAR05F000: Areas in the State of Washington, except those located on Indian Country lands, subject to industrial activity by a Federal Operator

Permittees in the State of Washington must meet the following conditions (see certification provided by the State of Washington, CWA410Cert_WA_2021 MSGP):

9.10.7.1 *General Conditions.*

a. For purposes of this Order, the term "Applicant" shall mean U.S. Environmental Protection Agency, and its agents, assignees and contractors.

b. For Purposes of this Order, the Permit "Permittee" shall mean any facility granted coverage under EPA's Multi Sector General Permit.

c. The Applicant shall enforce the permit and ensure that the Permittee complies with the conditions of the permits at all times.

d. Nothing in the Certification waives Ecology's authority to issue additional orders if Ecology determines that further actions are necessary to implement the water quality laws of the state. Further, Ecology retains continuing jurisdiction to make modifications hereto through supplemental orders, if additional impacts due to project construction or operation are identified (*e.g.,* violations of water quality standards, downstream erosion, etc.), or if additional conditions are necessary to further protect water quality.

e. In the event of changes or amendments to the state water quality, ground water quality, or sediment standards, or changes in or amendments to the state Water Pollution Control Act (RCW 90.48) or the federal Clean Water Act, Ecology may issue an amendment to this Certification to incorporate any such changes or amendments applicable to this project.

f. Failure of any person or entity to comply with this Certification may result in the issuance of civil penalties or other actions, whether administrative or judicial, to enforce the terms of the Certification. See *id.* at 3.

9.10.7.2 *Water Quality.*

a. This Certification does not authorize exceedances of water quality standards established in chapter 173-201A WAC.

b. Discharges shall not cause or contribute to a violation of surface water quality standards (chapter 173-201A WAC), ground water quality standards (chapter 173-200 WAV), sediment management standards (chapter 173-204 WAC), and human health based criteria in the National Toxics Rule (40 CRF Part 131.36). Discharges that are not in compliance with these standards are not authorized.

c. Prior to the discharge of stormwater and non-stormwater to waters of the state, the Permittee shall apply all known, available, and reasonable methods of prevention, control, and treatment (AKART). This includes the preparation and implementation of an adequate Stormwater Pollution Prevention Plan (SWPPP), with all appropriate best management practices (BMPs) installed and maintained in accordance with the SWPPP and the terms and conditions of this permit. The Permittee shall include each of the following mandatory BMPs in the SWPPP and implement the BMPs. The Permittee may omit individual BMPs if site conditions render the BMP unnecessary or infeasible and the Permittee provides alternative and equally effective BMPs. The Permittee must justify each BMP omission in the SWPPP. BMPs shall be consistent with:

   i. *2019 Stormwater Management Manual for Western Washington*, for sites west of the crest of the Cascade mountains; or

   ii. *2019 Stormwater Management Manual for Eastern Washington*, for sites east of the crest of the Cascade Mountains; or

   iii. Revisions to the manuals in S3.A.3. a & b., or other stormwater management guidance documents or manuals which provide an equivalent level of pollution prevention, that are approved by Ecology and incorporated into this permit in accordance with the permit modification requirements of WAC 173-226-230. For purposes of this section, the documents listed in Appendix 10 of the August 1, 2019 Phase I Municipal Stormwater Permit are hereby incorporated into this permit; or

   iv. Documentation in the SWPPP that the BMPs selected are demonstrably equivalent to practices contained in stormwater technical manuals approved by Ecology, including the proper selection, implementation, and maintenance of all applicable and appropriate best management practices for on-site pollution control.

d. Additional Sampling Requirements and Effluent Limits for Discharges to Certain Impaired Waters and Puget Sound Sediment Cleanup Sites.

i. Permittees discharging to a 303(d)-listed waterbody (Category 5), either directly or indirectly through a stormwater drainage system, shall comply with the applicable sampling requirements and numeric effluent limits in Table 1.

For purposes of this condition, “applicable sampling requirements and effluent limits” means the sampling and effluent limits in Table 1 that correspond to the specific parameter(s) the receiving water is 303(d)-listed for at the time of permit coverage, or Total Suspended Solids (TSS) if the waterbody is 303(d)-listed (Category 5) for sediment quality at the time of MSGP coverage.

If a discharge point is subject to an impaired waterbody effluent limit for a parameter that also has a benchmark, the effluent limit supersedes the benchmark. All references to Category 5 pertain to the 2012 EPA-approved Water Quality Assessment.

The 2012 EPA-approved Water Quality Assessment may be viewed online at: http://www.ecy.wa.gov/programs/wq/links/wq_assessments.html. See *id.*

Table 1: Sampling and Effluent Limits Applicable to Discharges to 303(d)-listed Waters

Parameter	**Units**	**Maximum Daily[a]**		**Analytical Method [b]**	**Laboratory Quantitation Level [c]**	**Sampling Frequency[d]**
		Freshwater	**Marine**			
Turbidity	NTUs	25	25	EPA 180.1 Meter	0.5	1/quarter
pH	SU	[j]	Between 7.0 and 8.5	Meter	±0.1	1/quarter
Fecal Coliform Bacteria	# colonies/ 100 mL	[i]	[i]	SM 9222D	20 CFU/ 100 mL	1/quarter
TSS [f]	mg/L	30	30	SM2540-D	5	1/quarter
Phosphorus, Total	mg/L	[g]	[g]	EPA 365.1	0.01	1/quarter
Total Ammonia (as N)	mg/L	[g]	[g]	SM 4500 NH^{3}-GH	0.3	1/quarter
Copper, Total	µg/L	[g]	[g]	EPA 200.8	2.0	1/quarter
Lead, Total	µg/L	[g]	[g]	EPA 200.8	0.5	1/quarter
Mercury, Total	µg/L	2.1	1.8	EPA1631E	0.0005	1/quarter
Zinc, Total	µg/L	[g]	[g]	EPA 200.8	2.5	1/quarter
Pentachlorophenol	µg/L	9[h]	[g]	EPA 625	1.0	1/quarter

[a] Maximum daily effluent limit means the highest allowable daily discharge. The daily discharge means the discharge of a pollutant measured during a calendar day. The daily discharge is the average measurement of the pollutant over the day; this does not apply to pH.

[b] Or other equivalent method with the same reporting level.

c The Permittee shall ensure laboratory results comply with the quantitation level (QL) specified in the table. However, if an alternate method from 40 CFR Part 136 is sufficient to produce measurable results in the sample, the Permittee may use that method for analysis. If the Permittee uses an alternative method it must report the test method and QL on the DMR. If the Permittee is unable to obtain the required QL due to matrix effects, the Permittee must report the matrix-specific method detection level (MDL) and QL on the DMR.

d. 1/quarter means at least one sample taken each quarter, e.g., Q1 = Jan 1 – March 31, Q2 = April 1 – June 30.

e Permittees shall use either a calibrated pH meter consistent with EPA 9040 or an approved state method.

f. Permittees who discharge to a waterbody 303(d)-listed (Category 5) for sediment quality shall sample the discharge for TSS.

g. Site-specific effluent limitation will be assigned at the time of permit coverage.

h. Based on a pH of 7.0.

i. A numeric effluent limit does not apply, but Permittees must sample according to Table 1. In addition, the following mandatory BMPs shall be incorporated into the SWPPP and implemented; the Permittee must:

1) Use all known, available and reasonable methods to prevent rodents, birds, and other animals from feeding/nesting/roosting at the facility. Nothing in this section shall be construed as allowing violations of any applicable federal, state or local statutes, ordinances, or regulations including the Migratory Bird Treaty Act.

2) Perform at least one annual dry weather inspection of the stormwater system to identify and eliminate sanitary sewer cross-connections.

3) Install structural source control BMPs to address on-site activities and sources that could cause bacterial contamination (*e.g.*, dumpsters, compost piles, food waste, and animal products).

4) Implement operational source control BMPs to prevent bacterial contamination from any known sources of fecal coliform bacteria (*e.g.*, animal waste).

5) Conduct additional bacteria-related sampling and/or BMPs, if ordered by Ecology on a case-by-case basis.

j. The effluent limit for a Permittee who discharges to a freshwater body 303(d)-listed for pH is: Between 6.0 and 8.5, if the 303(d)-listing is for high pH only; Between 6.5 and 9.0, if the 303(d)-listing is for low pH only; and Between 6.5 and 8.5 if the 303(d)-listing is for both low and high pH. All pH effluent limits are applied end-of-pipe.

ii. Permittees discharging to a Puget Sound Sediment Cleanup Site[3], either directly or indirectly through a stormwater drainage system, shall comply with this section:

1) Permittees shall sample the discharge for Total Suspended Solids (TSS) in accordance with Table 2.

2) If the waterbody is listed within Category 5 (sediment medium) where the *outfall* discharges to the waterbody, the discharge is subject to the TSS numeric effluent limit in Attachment A, Table 1.

---

[3] **Puget Sound Sediment Cleanup Site**: means Category 4B (Sediment) portions of Budd Inlet (Inner), Commencement Bay (Inner), Commencement Bay (Outer), Dalco Passage and East Passage, Duwamish Waterway (including East and West Waterway), Eagle Harbor, Elliot Bay, Hood Canal (North), Liberty Bay, Rosario Strait, Sinclair Inlet, and Thea Foss Waterway; Category 5 (Sediment) portions of the Duwamish Waterway; Category 4A (Sediment) portions of Bellingham Bay (Inner); and the Everett/Port Gardener, Oakland Bay/Shelton Harbor, and Port Angeles Harbor sediment cleanup areas, as mapped on Ecology's ISGP website. All references to Category 4A, 4B and 5 pertain to the 2012 EPA-approved Water Quality Assessment

All references to Category 4B and 5 pertain to the 2012 EPA-approved Water Quality Assessment, available online at: http://www.ecy.wa.gov/programs/wq/links/wq_assessments.html.

3) If the waterbody is not listed within Category 5 (sediment medium) where the outfall discharges to the waterbody (*e.g.*, Category 4B, etc.), the discharge is subject to the TSS benchmark in Attachment A, Table 2. If the discharge is subject to more than one TSS benchmark value (*i.e.*, two different benchmarks), the lower benchmark supersedes the higher one. If a discharge exceeds the TSS benchmark, the Permittee shall implement corrective actions in accordance with the MSGP.

4) Permittees shall remove accumulated solids from storm drain lines (including inlets, catch basins, sumps, conveyance lines, and oil/water separators) owned or controlled by the Permittee at least once during the term of the MSGP.

   Permittees shall conduct line cleaning operations (*e.g.*, jetting, vacuuming, removal, loading, storage, and/or transport) using BMPs to prevent discharges of storm drain solids to surface waters of the state.

   Removed storm drain solids and liquids shall be disposed of in accordance with applicable laws and regulations and documented in the SWPPP.

5) Prior to removing storm drain solids according to Attachment A. Condition 2.D, Permittees shall sample and analyze storm drain solids in accordance with Table 3. Storm drain solids must be collected/sampled from a representative catch basin, sump, pipe, or other feature within the storm drain system that corresponds to the discharge point where Total Suspended Solids (TSS) samples are collected per Attachment A. Samples may be either a single grab sample or a composite sample. Samples must be representative of the storm drain solids generated and accumulated in the facility's drainage system. To the extent possible, sample locations must exclude portions of the drainage system affected by water from off-site sources (*e.g.*, run-on from off-site properties, tidal influence, backflow). See *id.*

Table 2: Benchmarks and Sampling Requirements Applicable to Discharges to Puget Sound Sediment Cleanup Sites that are not Category 5 for Sediment Quality

Parameter	Units	Benchmark Value [a]	Analytical Method	Laboratory Quantitation Level [b]	Minimum Sampling Frequency [c]
TSS	mg/L	30	SM2540-D	5	1/quarter

a. Permittees sampling more than once per quarter shall average the sample results and compare the average value to the benchmark to determine if it the discharge has exceeded the benchmark value. However, if Permittees collect more than one sample during a 24-hour period, they must first calculate the daily average of the individual grab sample results collected during that 24-hour period; then use the daily average to calculate a quarterly average.

b. The Permittee shall ensure laboratory results comply with the quantitation level (QL) specified in the table. However, if an alternate method from 40 CFR Part 136 is sufficient to produce measurable results in the sample, the Permittee may use that method for analysis. If the Permittee uses an alternative method it must report the test method and QL on the DMR. If the Permittee is unable to obtain the required QL due to matrix effects, the Permittee must report the matrix-specific method detection level (MDL) and QL on the DMR.

c. 1/quarter means at least one sample taken each quarter, year-round.

Table 3: Sampling and Analytical Procedures for Storm Drain Solids

Analyte	Method in Sediment	Quantitation Level[a]
Conventional Parameters		
Percent total solids	SM 2540G, or ASTM Method D 2216	NA
Total organic carbon	Puget Sound Estuary Protocols (PSEP 1997), or EPA 9060	0.1%
Grain size	Ecology Method Sieve and Pipette (ASTM 1997), ASTMD422, or PSEP 1986/2003	NA
Metals		
Antimony, Total	EPA Method 200.8 (ICP/MS) , EPA Method 6010 or EPA Method 6020	0.2 mg/kg dw[b]
Arsenic, Total	EPA Method 200.8 (ICP/MS) , EPA Method 6010 or EPA Method 6020	0.1 mg/kg dw
Beryllium, Total	EPA Method 200.8 (ICP/MS) , EPA Method 6010 or EPA Method 6020	0.2 mg/kg dw
Cadmium, Total	EPA Method 200.8 (ICP/MS) , EPA Method 6010 or EPA Method 6020	0.2 mg/kg dw
Chromium, Total	EPA Method 200.8 (ICP/MS) , EPA Method 6010 or EPA Method 6020	0.5 mg/kg dw
Copper, Total	EPA Method 200.8 (ICP/MS) , EPA Method 6010 or EPA Method 6020	0.2 mg/kg dw
Lead, Total	EPA Method 200.8 (ICP/MS) , EPA Method 6010 or EPA Method 6020	0.2 mg/kg dw
Mercury, Total	EPA Method 1631E, or EPA Method 7471B	0.005 mg/kg dw
Nickel, Total	EPA Method 200.8 (ICP/MS) , EPA Method 6010 or EPA Method 6020	0.1 mg/kg dw
Selenium, Total	EPA Method 200.8 (ICP/MS) , EPA Method 6010 or EPA Method 6020	0.5 mg/kg dw
Silver, Total	EPA Method 200.8 (ICP/MS) , EPA Method 6010 or EPA Method 6020	0.1 mg/kg dw
Thallium, Total	EPA Method 200.8 (ICP/MS) , EPA Method 6010 or EPA Method 6020	0.2 mg/kg dw
Zinc, Total	EPA Method 200.8 (ICP/MS) , EPA Method 6010 or EPA Method 6020	5.0 mg/kg dw
Organics		
PAH compounds[c]	EPA Method 8270 D	70 µg/kg dw

PCBs (aroclors), Total[d]	EPA Method 8082	10 µg/kg dw
Petroleum Hydrocarbons		
NWTPH-Dx	NWTPH-Dx	25.0-100.0 mg/kg dw

[a] The Permittee shall ensure laboratory results comply with the quantitation level (QL) specified in the table. However, if an alternate method is sufficient to produce measurable results in the sample, the Permittee may use that method for analysis. If the Permittee uses an alternative method, it must report the test method and QL on the sediment monitoring report. All results shall be reported. For values below the QL, or where a QL is not specified, report results at the method detection level (MDL) from the lab and the qualifier of "U" for undetected at that concentration. If the Permittee is unable to obtain the required QL due to matrix effects, the Permittee must report the matrix-specific MDL and QL on the DMR.

[b] dw = dry weight.

[c] PAH compounds include: 1-methylnaphthalene, 2-methylnaphthalene, 2-chloronaphthalene, acenaphthylene, acenaphthene, anthracene, benzo(a)anthracene, benzo(a)pyrene, benzo(b, k)fluoranthene, benzo(ghi)perylene, dibenzo(a,h)anthracene, dibenzofuran, carbazole, chrysene, fluoranthene, fluorene, indeno(1,2,3-cd)pyrene, naphthalene, phenanthrene, and pyrene.

[d] Total = sum of PCB aroclors 1016+1221+1232+1242+1248+1254+1260.

6) All storm drain solids sampling data shall be reported to EPA no later than the DMR due date for the reporting period in which the solids were sampled. A copy of the lab report shall be submitted to EPA. See *id.*

e. Requirements for Discharges to Waters with Applicable TMDLs

  i. The Permittee shall comply with applicable TMDL determinations. Applicable TMDLs or TMDL determinations are TMDLs which have been completed by the issuance date of this permit, or which have been completed prior to the date that the Permittee's NOI is received by EPA, whichever is later. EPA will list the Permittee's requirements to comply with this condition on the letter of permit coverage.

  ii. TMDL requirements associated with TMDLs completed after the issuance date of this permit only become effective if they are imposed through an administrative order issued by EPA.

  iii. Where Ecology has established a TMDL wasteload allocation and sampling requirements for the Permittee's discharge, the Permittee shall comply with all requirements of the TMDL.

    1) If a discharge point is subject to a TMDL-related effluent limit for a parameter that also has a benchmark, the effluent limit supersedes the benchmark.

  iv. Where Ecology has established a TMDL general wasteload allocation for industrial stormwater discharges for a parameter present in the Permittee's discharge, but has not identified specific requirements, EPA will assume the Permittee's compliance with the terms and conditions of the permit complies with the approved TMDL.

  v. Where Ecology has not established a TMDL wasteload allocation for industrial stormwater discharges for a parameter present in the Permittee's discharge, but has not excluded these discharges, EPA will assume the Permittee's compliance with the terms and conditions of this permit complies with the approved TMDL.

vi. Where a TMDL for a parameter present in the Permittee's discharge specifically precludes or prohibits discharges of stormwater associated with industrial activity, the Permittee is not eligible for coverage under the MSGP. See *id.*

Appendix A - Definitions, Abbreviations, and Acronyms (for the purposes of the 2021 MSGP)

A.1. DEFINITIONS

Action Area – all areas to be affected directly or indirectly by the federal action and not merely the immediate area involved in the action. See 50 CFR 402. For the purposes of this permit and for application of Endangered Species Act requirements, the following areas are included in the definition of action area:

- The areas where stormwater discharges originate and flow from the industrial facility to the point of discharge into receiving waters. (Example: Where stormwater flows into a ditch, swale, or gully that leads to receiving waters and where listed species (such as listed amphibians) are found in the ditch, swale, or gully.)
- The areas where stormwater from industrial activities discharge into receiving waters and the areas in the immediate vicinity of the point of discharge. (Example: Where stormwater from industrial activities discharges into a stream segment that is known to harbor listed aquatic species.)
- The areas where stormwater controls will be constructed and operated, including any areas where stormwater flows to and from the stormwater controls. (Example: Where a stormwater retention pond would be built.)
- The areas upstream and/or downstream from the stormwater discharge into a stream segment that may be affected by these discharges. (Example: Where sediment discharged to a receiving stream settles downstream and impacts a breeding area of a listed aquatic species.)

Antidegradation Policy or Antidegradation Requirements – the water quality standards regulation that requires States and Tribes to establish a three-tiered antidegradation program:

1. Tier 1 maintains and protects existing uses and water quality conditions necessary to support such uses. An existing use can be established by demonstrating that fishing, swimming, or other uses have actually occurred since November 28, 1975, or that the water quality is suitable to allow such uses to occur. Where an existing use is established, it must be protected even if it is not listed in the water quality standards as a designated use. Tier 1 requirements are applicable to all surface waters.

2. Tier 2 maintains and protects "high quality" waters -- water bodies where existing conditions are better than necessary to support CWA § 101(a)(2) "fishable/swimmable" uses. Water quality can be lowered in such waters. However, state and tribal Tier 2 programs identify procedures that must be followed and questions that must be answered before a reduction in water quality can be allowed. In no case may water quality be lowered to a level which would interfere with existing or designated uses.

3. Tier 3 maintains and protects water quality in outstanding national resource waters (ONRWs). Except for certain temporary changes, water quality cannot be lowered in such waters. ONRWs generally include the highest quality waters of the United States. However, the ONRW classification also offers special protection for waters of exceptional ecological significance, i.e., those which are important, unique, or sensitive ecologically. Decisions regarding which water bodies qualify to be ONRWs are made by States and authorized Indian Tribes.

Arid Areas – areas where annual rainfall averages from 0 to 10 inches.

Best Available Technology Economically Achievable (BAT) – defined in CWA section 304(b)(2).

Best Conventional Pollutant Control Technology (BCT) – defined in CWA section 304(b)(4).

Best Practicable Control Technology Currently Available (BPT) – defined in CWA section 304(b)(1).

Bypass – the intentional diversion of waste streams from any portion of a treatment facility. See 40 CFR 122.41(m)(1)(i).

CERCLA Site (i.e., Superfund Site) – for the purposes of this permit, a site as defined in Section 101(9) of the Comprehensive Environmental Response, Compensation and Liability Act (CERCLA), 42 U.S.C. § 9601(9), that is undergoing a remedial investigation and feasibility study, or for which a Record of Decision for remedial action has been issued in accordance with the National Contingency Plan, 40 CFR Part 300.

Co-located Industrial Activities – any industrial activities, excluding your primary industrial activity(ies), located on-site that are defined by the stormwater regulations at 122.26(b)(14)(i)- and (xi). An activity at a facility is not considered co-located if the activity, when considered separately, does not meet the description of a category of industrial activity covered by the stormwater regulations or identified by the SIC code list in AppendixD.

Confidential Business Information (CBI) – see 40 CFR Part 2 for relevant definitions of CBI: http://www.gpo.gov/fdsys/pkg/CFR-2013-title40-vol1/pdf/CFR-2013-title40-vol1-part2-subpartB.pdf.

Control Measures – refers to any stormwater control or other method (including narrative effluent limitations) used to prevent or reduce the discharge of pollutants to waters of the United States.

Corrective Action – for the purposes of the permit, any action taken, or required to be taken, to repair, modify, or replace any stormwater control used at the site; (2) clean up and dispose of spills, releases, or other deposits found on the site; and (3) remedy a permitviolation.

Critical Habitat – as defined in the Endangered Species Act at 16 U.S.C. 1531 for a threatened or endangered species, (i) the specific areas within the geographical area occupied by the species, at the time it is listed in accordance with the provisions of section 4 of the Endangered Species Act, on which are found those physical or biological features essential to the conservation of the species and which may require special management considerations or protection; and (ii) specific areas outside the geographical area occupied by the species at the time it is listed in accordance with the provisions of section 4 of the Endangered Species Act, upon a determination by the Secretary that such areas are essential for the conservation of the species.

Director – a Regional Administrator of the Environmental Protection Agency or an authorized representative. See 40 CFR 122.2.

Discharge – when used without qualification, means the "discharge of a pollutant." See 40 CFR 122.2.

Discharge of a Pollutant – any addition of any “pollutant” or combination of pollutants to “waters of the United States” from any “point source,” or any addition of any pollutant or combination of pollutants to the waters of the “contiguous zone” or the ocean from any point source other than a vessel or other floating craft which is being used as a means of transportation. This includes additions of pollutants into waters of the United States from: surface runoff which is collected or channeled by man; discharges through pipes, sewers, or other conveyances, leading into privately owned treatment works. See 40 CFR 122.2.

Discharge Point – for the purposes of this permit, the location where collected and concentrated stormwater flows are discharged from the facility such that the first receiving waterbody into which the discharge flows, either directly or through a separate storm sewer system, is a water of the U.S.

Discharge-Related Activity – activities that cause, contribute to, or result in stormwater and allowable non-stormwater point source discharges, and measures such as the siting, construction and operation of stormwater controls to control, reduce, or prevent pollution in the discharges.

Discharge to an Impaired Water – for the purposes of this permit, a discharge to an impaired water occurs if the first water of the U.S. to which you discharge is identified by a state, tribe, or EPA as not meeting an applicable water quality standard, and requires development of a total maximum daily load (TMDL) (pursuant to Section 303(d) of the Clean Water Act), or is addressed by an EPA-approved or established TMDL, or is not in either of the above categories but the waterbody is covered by pollution control requirements that meet the requirements of 40 CFR 130.7(b)(1). For discharges that enter a separate storm sewer system prior to discharge, the water of the U.S. to which you discharge is the waterbody that receives the stormwater discharge from the storm sewer system.

Drought-Stricken Area – for the purposes of this permit, an area in which the National Oceanic and Atmospheric Administration's U.S. Seasonal Drought Outlook indicates for the period that any of the following conditions are likely: (1) "Drought to persist or intensify", (2) "Drought ongoing, some improvement", (3) "Drought likely to improve, impacts ease", or (4) "Drought development likely". See http://www.cpc.ncep.noaa.gov/products/expert_assessment/season_drought.gif.

Effective Operating Condition – for the purposes of this permit, a stormwater control is kept in effective operating condition if it has been implemented and maintained in such a manner that it is working as designed to minimize pollutant discharges.

Effluent Limitations – for the purposes of this permit, any of the Part 2requirements.

Effluent Limitations Guideline (ELG) – defined in 40 CFR § 122.2 as a regulation published by the Administrator under section 304(b) of CWA to adopt or revise effluent limitations.

Eligible – for the purposes of this permit, refers to stormwater and allowable non-stormwater discharges that are authorized for coverage under this general permit.

Endangered Species – defined in the Endangered Species Act at 16 U.S.C. 1531 as any species which is in danger of extinction throughout all or a significant portion of its range other than a species of the Class Insecta determined by the Secretary to constitute a pest whose protection under the provisions of this Act would present an overwhelming and overriding risk to man.

Existing Discharger – an operator applying for coverage under this permit for discharges authorized previously under an NPDES general or individual permit.

Facility or Activity – any NPDES "point source" (including land or appurtenances thereto) that is subject to regulation under the NPDES program. See 40 CFR 122.2.

Feasible – for the purposes of this permit, feasible means technologically possible and economically practicable and achievable in light of best industry practices. EPA notes that it does not intend for any permit requirement to conflict with state water rights law.

Federal Operator – an entity that meets the definition of "Operator" in this permit and is either any department, agency or instrumentality of the executive, legislative, and judicial branches of the Federal government of the United States, or another entity, such as a private contractor, operating for any such department, agency, or instrumentality.

Green Infrastructure – the range of measures that use plant or soil systems, permeable pavement or other permeable surfaces or substrates, stormwater harvest and reuse, or landscaping to store, infiltrate, or evapotranspirate stormwater and reduce flows to sewer systems or to surface waters. See Section 502 of the Federal Water Pollution Control Act (33 U.S.C. 1362).

Hazardous Waste – for the purposes of this permit, any liquid, solid, or contained gas that contain properties that are dangerous or potentially harmful to human health or the environment. See also 40 CFR §261.2.

Hazardous Substance – defined in CERCLA section 101(14) to include: a) any substance designated pursuant to the CWA section 311(b)(2)(A); b) any element, compound, mixture, solution or substance designated pursuant to section 102 of CERCLA; c) any hazardous waste having the characteristics identified under or listed pursuant to section 3001 of the Resource Conservation and Recovery Act (RCRA); d) any toxic pollutant listed under CWA section 307(a); e) any hazardous air pollutant listed under section 112 of the Clean Air Act; and f) any imminently hazardous chemical substance or mixture with respect to which the Administrator has taken action pursuant to section 7 of the Toxic Substances Control Act. See 40 CFR 302.4 for the list of such hazardous substances.

Historic Property – as defined in the National Historic Preservation Act regulations means any prehistoric or historic district, site, building, structure, or object included in, or eligible for inclusion in, the National Register of Historic Places maintained by the Secretary of the Interior. This term includes artifacts, records, and remains that are related to and located within such properties. The term includes properties of traditional religious and cultural importance to an Indian tribe or Native Hawaiian organization and that meet the National Register criteria.

Impaired Water (or "Water Quality Impaired Water" or "Water Quality Limited Segment") – for the purposes of this permit, waters identified by a state, tribe, or EPA as not meeting an applicable water quality standard, and require development of a total maximum daily load (TMDL) (pursuant to Section 303(d) of the CWA), or are addressed by an EPA-approved or established TMDL, or are covered by pollution controls requirements that meet the requirements of 40 FR 130.7(b)(1). For discharges that enter a separate storm sewer system prior to discharge, the first water of the U.S. to which you discharge is the waterbody that receives the stormwater discharge from the storm sewer system.

Indian Country or Indian Country Lands – defined at 40 CFR 122.2 as:

1. All land within the limits of any Indian reservation under the jurisdiction of the United States Government, notwithstanding the issuance of any patent, and including rights-of-way running through the reservation;
2. All dependent Indian communities within the borders of the United States, whether within the original or subsequently acquired territory thereof, and whether within or without the limits of a State: and
3. All Indian allotments, the Indian titles to which have not been extinguished, including rights-of-way running through the same. This definition includes all land held in trust for an Indian tribe. (18 U.S.C. 1151)

Infeasible – for the purposes of this permit, infeasible means not technologically possible or not economically practicable and achievable in light of best industry practices. EPA notes that it does not intend for any permit requirement to conflict with state water rights law.

Industrial Activity – the 10 categories of industrial activities included in the definition of "stormwater discharges associated with industrial activity" as defined in 40 CFR 122.26(b)(14)(i)- and (xi).

Industrial Stormwater – stormwater runoff from industrial activity.

Measurable Storm Event – a precipitation event that results in a measurable amount of precipitation (i.e., a storm event that results in an actual discharge) and that follows the preceding storm event by at least 72 hours (3-days). The 72-hour storm interval does not apply if you document that less than a 72-hour interval is representative for local storm events.

Minimize – for the purposes of this permit, minimize means to reduce and/or eliminate to the extent achievable using control measures that are technologically available and economically practicable and achievable in light of best industry practices.

Municipal Separate Storm Sewer (MS4) – defined at 40 CFR §122.26(b)(8) as a conveyance or system of conveyances (including roads with drainage systems, municipal streets, catch basins, curbs, gutters, ditches, manmade channels, or storm drains):

1. Owned or operated by a state, city, town, borough, county, parish, district, association, or other public body (created by or pursuant to State law) having jurisdiction over disposal of sewage, industrial wastes, stormwater, or other wastes, including special districts under state law such as a sewer district, flood control district or drainage district, or similar entity, or an Indian tribe or an authorized Indian tribal organization, or a designated and approved management agency under section 208 of the CWA that discharges to waters of the United States;
2. Designed or used for collecting or conveying stormwater;
3. Which is not a combined sewer; and
4. Which is not part of a Publicly Owned Treatment Works (POTW) as defined at 40 CFR 122.2. See 40 CFR 122.26(b)(4) and (b)(7).

National Pollutant Discharge Elimination System (NPDES) – defined at 40 CFR §122.2 as the national program for issuing, modifying, revoking and reissuing, terminating, monitoring and enforcing permits, and imposing and enforcing pretreatment requirements, under sections 307, 402, 318, and 405 of CWA. The term includes an 'approved program.'

New Discharger – a facility from which there is or may be a discharge, that did not commence the discharge of pollutants at a particular site prior to August 13, 1979, which is not a new source, and which has never received a finally effective NPDES permit for discharges at that site. See 40 CFR 122.2.

New Source – any building, structure, facility, or installation from which there is or may be a "discharge of pollutants," the construction of which commenced:

- after promulgation of standards of performance under section 306 of the CWA which are applicable to such source, or

- after proposal of standards of performance in accordance with section 306 of the CWA which are applicable to such source, but only if the standards are promulgated in accordance with section 306 within 120 days of their proposal. See 40 CFR 122.2.

New Source Performance Standards (NSPS) – technology-based standards for facilities that qualify as new sources under 40 CFR 122.2 and 40 CFR 122.29.

No Exposure – all industrial materials or activities protected by a storm-resistant shelter to prevent exposure to rain, snow, snowmelt, and/or runoff. See 40 CFR 122.26(g).

Non-Stormwater Discharges – discharges that do not originate from storm events. They can include, but are not limited to, discharges of process water, air conditioner condensate, non-contact cooling water, pavement wash water, external building washdown, irrigation water, or uncontaminated ground water or spring water.

Notice of Intent (NOI) – the form (electronic or paper) required for authorization of coverage under the Multi-Sector General Permit.

Notice of Termination (NOT) – the form (electronic or paper) required for terminating coverage under the Multi-Sector General Permit.

Operator – any entity with a stormwater discharge associated with industrial activity that meets either of the following two criteria:

1. The entity has operational control over industrial activities, including the ability to make modifications to those activities; or
2. The entity has day-to-day operational control of activities at a facility necessary to ensure compliance with the permit (e.g., the entity is authorized to direct workers at a facility to carry out activities required by the permit).

Outfall – see "Discharge Point."

Permitting Authority – for the purposes of this permit, EPA, a Regional Administrator of EPA, or an authorized representative.

Person – an individual, association, partnership, corporation, municipality, State or Federal agency, or an agent or employee thereof. See 40 CFR 122.2.

Point Source – any discernible, confined, and discrete conveyance, including but not limited to any pipe, ditch, channel, tunnel, conduit, well, discrete fissure, container, rolling stock, concentrated animal feeding operation, landfill leachate collection system, vessel, or other floating craft from which pollutants are or may be discharged. This term does not include return flows from irrigated agriculture or agricultural stormwater runoff. See 40 CFR 122.2.

Pollutant – defined at 40 CFR §122.2. A partial listing from this definition includes: dredged spoil, solid waste, incinerator residue, filter backwash, sewage, garbage, sewage sludge, munitions, chemical wastes, biological materials, heat, wrecked or discarded equipment, rock, sand, cellar dirt, and industrial, municipal and agricultural waste discharged into water. See 40 CFR 122.2.

Pollutant of Concern – a pollutant which causes or contributes to a violation of a water quality standard, including a pollutant which is identified as causing an impairment in a state's 303(d) list.

Primary Industrial Activity – includes any activities performed on-site which are (1) identified by the facility's primary SIC code and included in the descriptions of 122.26(b)(14)(ii), (iii), (vi), (viii), or (xi); or (2) included in the narrative descriptions of 122.26(b)(14)(i), (iv), (v), (vii), or (ix). [For co-located activities covered by multiple SIC codes, it is recommended that the primary industrial determination be based on the value of receipts or revenues or, if such information is not available for a particular facility, the number of employees or production rate for each process may be compared. The operation that generates the most revenue or employs the most personnel is the operation in which the facility is primarily engaged. In situations where the vast majority of on-site activity falls within one SIC code, that activity may be the primary industrial activity.] Narrative descriptions in 40 CFR 122.26(b)(14) identified above include: (i) activities subject to stormwater effluent limitations guidelines, new source performance standards, or toxic pollutant effluent standards; (iv) hazardous waste treatment storage, or disposal facilities including those that are operating under interim status or a permit under subtitle C of the Resource Conservation and Recovery Act (RCRA); (v) landfills, land application sites and open dumps that receive or have received industrial wastes; (vii) steam electric power generating facilities; and (ix) sewage treatment works with a design flow of 1.0 mgd or more.

Qualified Personnel – qualified personnel are those who are knowledgeable in the principles and practices of industrial stormwater controls and pollution prevention, and who possess the education and ability to assess conditions at the industrial facility that could impact stormwater quality, and the education and ability to assess the effectiveness of stormwater controls selected and installed to meet the requirements of the permit.

Reportable Quantity Release – a release of a hazardous substance at or above the established legal threshold that requires emergency notification. Refer to 40 CFR Parts 110, 117, and 302 for complete definitions and reportable quantities for which notification is required.

Restricted Information – for the purposes of this permit, information that is privileged or that is otherwise protected from disclosure pursuant to applicable statutes, Executive Orders, or regulations. Such information includes, but is not limited to: classified national security information, protected critical infrastructure information, sensitive security information, and proprietary business information.

Runoff Coefficient – the fraction of total rainfall that will appear at the conveyance as runoff. See 40 CFR 122.26(b)(11).

Run-On – sources of stormwater that drain from land located upslope or upstream from the regulated facility in question.

Saline Water or Saltwater – for the purposes of this permit, a waterbody with salinity that is equal to or exceeds 10 parts per thousand 95 percent or more of the time, unless otherwise defined as a coastal or marine water by the applicable state or tribal surface water quality standards.

Semi-Arid Areas – areas where annual rainfall averages from 10 to 20 inches.

Significant Materials – includes, but is not limited to: raw materials; fuels; materials such as solvents, detergents, and plastic pellets; finished materials such as metallic products; raw materials used in food processing or production; hazardous substances designated under section 101(14) of CERCLA; any chemical the facility is required to report pursuant to section 313 of Title III of SARA; fertilizers; pesticides; and waste products such as ashes, slag and sludge that have the potential to be released with stormwater discharges. See 40 CFR 122.26(b)(12).

Special Aquatic Sites – sites identified in 40 CFR 230 Subpart E. These are geographic areas, large or small, possessing special ecological characteristics of productivity, habitat, wildlife protection, or other important and easily disrupted ecological values. These areas are generally recognized as significantly influencing or positively contributing to the general overall environmental health or vitality of the entire ecosystem of a region.

Spill – for the purpose of this permit, the release of a hazardous or toxic substance from its container or containment.

Stormwater – stormwater runoff, snow melt runoff, and surface runoff and drainage. See 40 CFR 122.26(b)(13).

Stormwater Controls – see "Control Measures."

Stormwater Discharges Associated with Construction Activity – as used in this permit, a discharge of pollutants in stormwater runoff from areas where land-disturbing activities (e.g., clearing, grading, or excavating) occur, or where construction materials or equipment storage or maintenance (e.g., fill piles, borrow areas, concrete truck washout, fueling), or other industrial stormwater directly related to the construction process (e.g., concrete or asphalt batch plants) are located. See 40 CFR 122.26(b)(14)(x) and 40 CFR 122.26(b)(15).

Stormwater Discharges Associated with Industrial Activity – the discharge from any conveyance that is used for collecting and conveying stormwater and that is directly related to manufacturing, processing or raw materials storage areas at an industrial plant. The term does not include discharges from facilities or activities excluded from the NPDES program under Part 122. For the categories of industries identified in this section, the term includes, but is not limited to, stormwater discharges from industrial plant yards; immediate access roads and rail lines used or traveled by carriers of raw materials, manufactured products, waste material, or by-products used or created by the facility; material handling sites; refuse sites; sites used for the application or disposal of process waste waters (as defined at part 401 of this chapter); sites used for the storage and maintenance of material handling equipment; sites used for residual treatment, storage, or disposal; shipping and receiving areas; manufacturing buildings; storage areas (including tank farms) for raw materials, and intermediate and final products; and areas where industrial activity has taken place in the past and significant materials remain and are exposed to stormwater. For the purposes of this paragraph, material handling activities include storage, loading and unloading, transportation, or conveyance of any raw material, intermediate product, final product, by-product or waste product. The term excludes areas located on plant lands separate from the plant's industrial activities, such as office buildings and accompanying parking lots as long as the drainage from the excluded areas is not mixed with stormwater drained from the above described areas. Industrial facilities include those that are federally, state, or municipally owned or operated that meet the description of the facilities listed in 40 CFR 122.26(b)(14). The term also includes those facilities designated under the provisions of 40 CFR 122.26(a)(1)(v). See 40 CFR 122.26(b)(14).

Stormwater Pollution Prevention Team – the stormwater pollution prevention team is responsible for overseeing development of the SWPPP, any modifications to it, and for implementing and maintaining stormwater control measures and taking corrective actions when required. Each member of the stormwater pollution prevention team must have ready access to either an electronic or paper copy of applicable portions of this permit, the most updated copy of your SWPPP, and other relevant documents or information that must be kept with the SWPPP. The individuals on the "Stormwater Team" must be identified in the SWPPP.

Storm Event – a precipitation event that results in a measurable amount of precipitation.

Threatened Species – defined in the Endangered Species Act at 16 U.S.C. 1531 as any species which is likely to become an endangered species within the foreseeable future throughout all or a significant portion of its range.

Tier 2 Waters – for antidegradation purposes, pursuant to 40 CFR 131.12(a)(2), Tier 2 waters are characterized as having water quality that exceeds the levels necessary to support propagation of fish, shellfish, and wildlife and recreation in and on the water.

Tier 2.5 Waters – for antidegradation purposes, Tier 2.5 waters are those waters designated by States or Tribes as requiring a level of protection equal to and above that given to Tier 2 waters, but less than that given Tier 3 waters. States have special requirements for these waters.

Tier 3 Waters – for antidegradation purposes, pursuant to 40 CFR 131.12(a)(3), Tier 3 waters are identified by states as having high quality waters constituting an Outstanding National Resource Water (ONRW), such as waters of National Parks and State Parks, wildlife refuges, and waters of exceptional recreational or ecological significance.

Total Maximum Daily Loads (TMDLs) – the sum of the individual wasteload allocations (WLAs) for point sources and load allocations (LAs) for nonpoint sources and natural background. If receiving water has only one point source discharger, the TMDL is the sum of that point source WLA plus the LAs for any nonpoint sources of pollution and natural background sources, tributaries, or adjacent segments. TMDLs can be expressed in terms of either mass per time, toxicity, or other appropriate measure. (See section 303(d) of the Clean Water Act and 40 CFR 130.2 and 130.7).

Toxic Waste – see "Hazardous Materials."

Uncontaminated Discharge – a discharge that does not cause or contribute to an exceedance of applicable water quality standards.

Upset – upset means an exceptional incident in which there is unintentional and temporary noncompliance with technology based permit effluent limitations because of factors beyond your reasonable control. An upset does not include noncompliance to the extent caused by operational error, improperly designed treatment facilities, inadequate treatment facilities, lack of preventive maintenance, or careless or improper operation. See 40 CFR 122.41(n)(1).

Water Quality Impaired – see "Impaired Water."

Water Quality Standards – defined in 40 CFR § 131.3, and are provisions of State or Federal law which consist of a designated use or uses for the waters of the United States, water quality criteria for such waters based upon such uses, and an antidegradation policy to protect high-quality waters. Water quality standards protect the public health or welfare, enhance the quality of water and serve the purposes of the Act.

Waters of the United States – see definition at 40 CFR §122.2.

A.2. ABBREVIATIONS AND ACRONYMS

AIM – Advanced Implementation Measures

BAT – Best Available Technology Economically Achievable

BOD5 – Biochemical Oxygen Demand (5-day test)

BMP – Best Management Practice

BPJ – Best Professional Judgment

CERCLA – Comprehensive Environmental Response, Compensation and Liability Act

CGP – Construction General Permit

CFR – Code of Federal Regulations

COD – Chemical Oxygen Demand

CWA – Clean Water Act (or the Federal Water Pollution Control Act, 33 U.S.C. §1251 *et seq*)

CWT – Centralized Waste Treatment

DMR – Discharge Monitoring Report

ELG – Effluent Limitations Guideline

EPA – U. S. Environmental Protection Agency

ESA – Endangered Species Act

FWS – U. S. Fish and Wildlife Service

LA – Load Allocations

MGD – Million Gallons per Day

MOS – Margin of Safety

MS4 – Municipal Separate Storm Sewer System

MSGP – Multi-Sector General Permit

NAICS – North American Industry Classification System

NEPA – National Environmental Policy Act

NET – NPDES eReporting Tool

NHPA – National Historic Preservation Act

NMFS – U. S. National Marine Fisheries Service

NOI – Notice of Intent

NOE – No Exposure

NOT – Notice of Termination

NPDES – National Pollutant Discharge Elimination System

NRC – National Response Center

NRHP – National Register of Historic Places

NSPS – New Source Performance Standard

NTU – Nephelometric Turbidity Unit

OMB – U. S. Office of Management and Budget

ORW – Outstanding Resource Water

OSM – U. S. Office of Surface Mining

POTW – Publicly Owned Treatment Works

RCRA – Resource Conservation and Recovery Act

RQ – Reportable Quantity

SARA – Superfund Amendments and Reauthorization Act

SDS – Safety Data Sheet

SHPO – State Historic Preservation Officer

SIC – Standard Industrial Classification

SMCRA – Surface Mining Control and Reclamation Act

SPCC – Spill Prevention, Control, and Countermeasures

SWPPP – Stormwater Pollution Prevention Plan

THPO – Tribal Historic Preservation Officer

TMDL – Total Maximum Daily Load

TSDF – Treatment, Storage, or Disposal Facility

TSS – Total Suspended Solids

USGS – United States Geological Survey

WLA – Wasteload Allocation

WQS – Water Quality Standard

Appendix B - Standard Permit Conditions

Standard permit conditions in Appendix B are consistent with the general permit provisions required under 40 CFR 122.41.

B.1. Duty To Comply.

You must comply with all conditions of this permit. Any permit noncompliance constitutes a violation of the Clean Water Act and is grounds for enforcement action; for permit termination, revocation and reissuance, or modification; or for denial of a permit renewal application.

A. You must comply with effluent standards or prohibitions established under section 307(a) of the Clean Water Act for toxic pollutants within the time provided in the regulations that establish these standards, even if the permit has not yet been modified to incorporate the requirement.

B. Penalties for Violations of Permit Conditions: EPA and other federal agencies are required to adjust their maximum and minimum statutory civil penalty amounts through rulemaking by January 15 each year to account for inflation. EPA's annual rulemaking adjustments, codified in 40 C.F.R. § 19.4, are mandated by the Federal Civil Penalties Inflation Adjustment Act of 1990, as amended through the Federal Civil Penalties Inflation Adjustment Act Improvements Act of 2015 (28 U.S.C. § 2461 note). As such, the civil penalty amounts below may change in the future due to inflation. See 40 C.F.R. § 19.4 for the most up-to-date civil penalty amounts.

1. Criminal Penalties.

    1.1. Negligent Violations. The CWA provides that any person who negligently violates permit conditions implementing Sections 301, 302, 306, 307, 308, 318, or 405 of the Act is subject to criminal penalties of not less than $2,500 nor more than $25,000 per day of violation, or imprisonment of not more than one year, or both. In the case of a second or subsequent conviction for a negligent violation, a person shall be subject to criminal penalties of not more than $50,000 per day of violation or by imprisonment of not more than two years, or both.

    1.2. *Knowing Violations.* The CWA provides that any person who knowingly violates permit conditions implementing Sections 301, 302, 306, 307, 308, 318, or 405 of the Act is subject to a fine of not less than $5,000 nor more than $50,000 per day of violation, or by imprisonment for not more than 3 years, or both. In the case of a second or subsequent conviction for a knowing violation, a person shall be subject to criminal penalties of not more than $100,000 per day of violation, or imprisonment of not more than 6 years, or both.

    1.3. *Knowing Endangerment.* The CWA provides that any person who knowingly violates permit conditions implementing Sections 301, 302, 306, 307, 308, 318, or 405 of the Act and who knows at that time that he or she is placing another person in imminent danger of death or serious bodily injury shall upon conviction be subject to a fine of not more than $250,000 or by imprisonment of not more than 15 years, or both. In the case of a second or subsequent conviction for a knowing endangerment violation, a person shall be subject to a fine of not more than $500,000 or by imprisonment of not more than 30 years, or both. An organization, as defined in section 309(c)(3)(B)(iii) of the Act, shall, upon conviction of violating the imminent danger provision be subject to a fine of not more than $1,000,000 and can fined up to $2,000,000 for second or subsequent convictions.

1.4. *False Statement.* The CWA provides that any person who falsifies, tampers with, or knowingly renders inaccurate any monitoring device or method required to be maintained under this permit shall, upon conviction, be punished by a fine of not more than $10,000, or by imprisonment for not more than 2 years, or both. If a conviction of a person is for a violation committed after a first conviction of such person under this paragraph, punishment is a fine of not more than $20,000 per day of violation, or by imprisonment of not more than 4 years, or both. The Act further provides that any person who knowingly makes any false statement, representation, or certification in any record or other document submitted or required to be maintained under this permit, including monitoring reports or reports of compliance or non-compliance shall, upon conviction, be punished by a fine of not more than $10,000 per violation, or by imprisonment for not more than 6 months per violation, or by both.

2. *Civil Penalties.* The CWA provides that any person who violates a permit condition implementing Sections 301, 302, 306, 307, 308, 318, or 405 of the Act is subject to a civil penalty not to exceed the maximum amounts authorized by Section 309(d) of the Act and the Federal Civil Penalties Inflation Adjustment Act of 1990, as amended by Federal Civil Penalties Inflation Adjustment Act Improvements Act of 2015 (28 U.S.C. § 2461 note), and codified at 40 CFR § 19.4.

3. *Administrative Penalties.* The CWA provides that any person who violates a permit condition implementing Sections 301, 302, 306, 307, 308, 318, or 405 of the Act is subject to an administrative penalty, as follows

3.1 *Class I Penalty.* Not to exceed the maximum amounts authorized by Section 309(g)(2)(A) of the Act and the Federal Civil Penalties Inflation Adjustment Act of 1990 as amended by the Federal Civil Penalties Inflation Adjustment Act Improvements Act of 2015 (28 U.S.C. § 2461 note), and codified at 40 CFR § 19.4.

3.2 *Class II Penalty.* Not to exceed the maximum amounts authorized by Section 309(g)(2)(B) of the Act and the Federal Civil Penalties Inflation Adjustment Act of 1990, as amended by the Federal Civil Penalties Inflation Adjustment Act Improvements Act of 2015 (28 U.S.C. § 2461 note), and codified at 40 CFR § 19.4.

B.2. Duty to Reapply.

If you wish to continue an activity regulated by this permit after the expiration date of this permit, you must apply for and obtain authorization as required by the new permit once EPA issues it.

B.3. Need to Halt or Reduce Activity Not a Defense.

It shall not be a defense for you in an enforcement action that it would have been necessary to halt or reduce the permitted activity in order to maintain compliance with the conditions of this permit.

B.4. Duty to Mitigate.

You must take all reasonable steps to minimize or prevent any discharge in violation of this permit which has a reasonable likelihood of adversely affecting human health or the environment.

B.5. Proper Operation and Maintenance.

You must at all times properly operate and maintain all facilities and systems of treatment and control (and related appurtenances) which are installed or used by you to achieve compliance with the conditions of this permit. Proper operation and maintenance also includes adequate laboratory controls and appropriate quality assurance procedures. This provision requires the operation of backup or auxiliary facilities or similar systems which are installed by you only when the operation is necessary to achieve compliance with the conditions of this permit.

B.6. Permit Actions.

This permit may be modified, revoked and reissued, or terminated for cause. Your filing of a request for a permit modification, revocation and reissuance, or termination, or a notification of planned changes or anticipated noncompliance does not stay any permit condition.

B.7. Property Rights.

This permit does not convey any property rights of any sort, or any exclusive privileges.

B.8. Duty to Provide Information.

You must furnish to EPA or an authorized representative (including an authorized contractor acting as a representative of EPA), within a reasonable time, any information which EPA may request to determine whether cause exists for modifying, revoking and reissuing, or terminating this permit or to determine compliance with this permit. You must also furnish to EPA or an authorized representative upon request, copies of records required to be kept by this permit.

B.9. Inspection and Entry.

You must allow EPA or an authorized representative (including an authorized contractor acting as a representative of EPA), upon presentation of credentials and other documents as may be required by law, to:

A. Enter upon your premises where a regulated facility or activity is located or conducted, or where records must be kept under the conditions of this permit;

B. Have access to and copy, at reasonable times, any records that must be kept under the conditions of this permit;

C. Inspect at reasonable times any facilities, equipment (including monitoring and control equipment), practices, or operations regulated or required under this permit; and

D. Sample or monitor at reasonable times, for the purposes of assuring permit compliance or as otherwise authorized by the Clean Water Act, any substances or parameters at any location.

B.10. Monitoring and Records.

A. Samples and measurements taken for the purpose of monitoring must be representative of the volume and nature of the monitored activity.

B. You must retain records of all monitoring information, including all calibration and maintenance records and all original strip chart recordings for continuous monitoring instrumentation, copies of all reports required by this permit, and records of all data used to complete the application for this permit, for a period of at least three years from the date the permit expires or the date the permittee's authorization is terminated. This period may be extended by request of EPA at any time.

C. Records of monitoring information must include:

1. The date, exact place, and time of sampling or measurements;
2. The individual(s) who performed the sampling or measurements;
3. The date(s) analyses were performed
4. The individual(s) who performed the analyses;
5. The analytical techniques or methods used; and
6. The results of such analyses.

D. Monitoring must be conducted according to test procedures approved under 40 CFR Part 136, unless other test procedures have been specified in the permit.

E. The Clean Water Act provides that any person who falsifies, tampers with, or knowingly renders inaccurate any monitoring device or method required to be maintained under this permit shall, upon conviction, be punished by a fine of not more than $10,000, or by imprisonment for not more than 2 years, or both. If a conviction of a person is for a violation committed after a first conviction of such person under this paragraph, punishment is a fine of not more than $20,000 per day of violation, or by imprisonment of not more than 4 years, or both.

B.11. Signatory Requirements.

A. NOIs, NOTs, and NOEs must be signed as follows:

1. For a corporation: By a responsible corporate officer. For the purpose of this subsection, a responsible corporate officer means: (i) a president, secretary, treasurer, or vice-president of the corporation in charge of a principal business function, or any other person who performs similar policy- or decision-making functions for the corporation, or (ii) the manager of one or more manufacturing, production, or operating facilities, provided, the manager is authorized to make management decisions which govern the operation of the regulated facility including having the explicit or implicit duty of making major capital investment recommendations, and initiating and directing other comprehensive measures to assure long term environmental compliance with environmental laws and regulations; the manager can ensure that the necessary systems are established or actions taken to gather complete and accurate information for permit application requirements; and where authority to sign documents has been assigned or delegated to the manager in accordance with corporate procedures.
2. For a partnership or sole proprietorship: By a general partner or the proprietor, respectively; or
3. For a municipality, state, federal, or other public agency: By either a principal executive officer or ranking elected official. For purposes of this subsection, a principal executive officer of a federal agency includes (i) the chief executive officer of the agency, or (ii) a senior executive officer having responsibility for the overall operations of a principal geographic unit of the agency (e.g., Regional Administrator of EPA).

B. Your SWPPP, including changes to your SWPPP to document any corrective actions or advanced implementation measures taken as required by Part 5, and any other compliance documentation required under this permit, including the Annual Report, DMRs, and inspection reports, must be signed by a person described in Appendix B, Subsection 11.A above or by a duly authorized representative of that person. A person is a duly authorized representative only if:

1. The authorization is made in writing by a person described in Appendix B, Subsection 11.A;
2. The authorization specifies either an individual or a position having responsibility for the overall operation of the regulated facility or activity such as the position of plant manager, operator of a well or a well field, superintendent, position of equivalent responsibility, or an individual or position having overall responsibility for environmental matters for the company. (A duly authorized representative may thus be either a named individual or any individual occupying a named position); and
3. The signed and dated written authorization is included in the SWPPP. A copy must be submitted to EPA, if requested.

C. All other changes to your SWPPP, and other compliance documentation required under Part 5.3, must be signed and dated by the person preparing the change or documentation.

D. Changes to Authorization. If an authorization under this permit is no longer accurate because the industrial facility has been purchased by a different entity, a new NOI satisfying the requirements of Part 1.3 must be submitted to EPA. See Table 1-2 in Part 1.3.3 of the permit. However, if the only change that is occurring is a change in contact information or a change in the facility's address, the operator need only make a modification to the existing NOI submitted for authorization.

E. Any person signing documents in accordance with Appendix B, Subsections 11.A or 11.B above must include the following certification:

> "I certify under penalty of law that this document and all attachments were prepared under my direction or supervision in accordance with a system designed to assure that qualified personnel properly gathered and evaluated the information contained therein. Based on my inquiry of the person or persons who manage the system, or those persons directly responsible for gathering the information, the information contained is, to the best of my knowledge and belief, true, accurate, and complete. I am aware that there are significant penalties for submitting false information, including the possibility of fine and imprisonment for knowing violations."

F. For persons signing documents electronically, in addition to meeting other applicable requirements in Appendix I, Subsection B.11, such signatures must be legally dependable with no less evidentiary value than their paper equivalent.

G. The CWA provides that any person who knowingly makes any false statement, representation, or certification in any record or other document submitted or required to be maintained under this permit, including monitoring reports or reports of compliance or non-compliance shall, upon conviction, be punished by a fine of not more than $10,000 per violation, or by imprisonment for not more than 6 months per violation, or by both.

B.12. Reporting Requirements.

A. Planned changes. You must give notice to EPA as soon as possible, but no fewer than 30 days, of any planned physical alterations or additions to the permitted facility. Notice is required only when:

1. The alteration or addition to a permitted facility may meet one of the criteria for determining whether a facility is a new source in 40 CFR 122.29(b); or
2. The alteration or addition could significantly change the nature or increase the quantity of pollutants discharged. This notification applies to pollutants which are subject neither to effluent limitations in the permit, nor to notification requirements under 40 CFR 122.42(a)(1).

B. Anticipated noncompliance. You must give advance notice to EPA of any planned changes in the permitted facility or activity which may result in noncompliance with permit requirements.

C. Transfers. This permit is not transferable to any person except after notice to EPA. Where a facility wants to change the name of the permittee, the original permittee (the first owner or operators) must submit a Notice of Termination pursuant to Part 1.4. The new owner or operator must submit a Notice of Intent in accordance with Part 1.3.3 and Table 1-2. See also requirements in Appendix B, Subsections 11.B and 11.D.

D. Monitoring reports. Monitoring results must be reported at the intervals specified elsewhere in this permit.

1. Pursuant to Part 7.1, all monitoring data collected pursuant to Part 4 must be submitted to EPA using EPA's online DMR system (http://www.epa.gov/netdmr/).

2. If you monitor any pollutant more frequently than required by the permit using test procedures approved under 40 CFR Part 136 or as specified in the permit, the results of this monitoring must be included in the calculation and reporting of the data submitted in the DMR.

3. Calculations for all limitations which require averaging of measurements must use an arithmetic mean. For averaging purposes, use a value of zero for any individual sample parameter, which is determined to be less than the method detection limit. For sample values that fall between the method detection level and the quantitation limit (i.e., a confirmed detection but below the level that can be reliably quantified), use a value halfway between zero and the quantitation limit.

E. Compliance schedules. Reports of compliance or noncompliance with, or any progress reports on, interim and final requirements contained in any compliance schedule of this permit must be submitted no later than 14 days following each schedule date.

F. Twenty-four hour reporting.

1. You must report any noncompliance which may endanger health or the environment. Any information must be provided orally within 24 hours from the time you become aware of the circumstances. A written submission must also be provided within five days of the time you become aware of the circumstances. The written submission must contain a description of the noncompliance and its cause; the period of noncompliance, including exact dates and times, and if the noncompliance has not been corrected, the anticipated time it is expected to continue; and steps taken or planned to reduce, eliminate, and prevent reoccurrence of the noncompliance.

2. The following shall be included as information which must be reported within 24 hours under this paragraph.

   a. Any unanticipated bypass which exceeds any effluent limitation in the permit. (See 40 CFR 122.41(m)(3)(ii))

   b. Any upset which exceeds any effluent limitation in the permit

   c. Violation of a maximum daily discharge limit for any numeric effluent limitation. (See 40 CFR 122.44(g).)

3. EPA may waive the written report on a case-by-case basis for reports under Appendix B, Subsection 12.F.2 if the oral report has been received within 24 hours.

G. Other noncompliance. You must report all instances of noncompliance not reported under Appendix B, Subsections 12.D, 12.E, and 12.F, at the time monitoring reports are submitted. The reports must contain the information listed in Appendix B, Subsection 12.F.

H. Other information. Where you become aware that you failed to submit any relevant facts in your NOI, or submitted incorrect information in your NOI or in any report to the Permitting Authority, you must promptly submit such facts or information.

B.13. Bypass.

A. Definitions.

1. Bypass means the intentional diversion of waste streams from any portion of a treatment facility See 40 CFR 122.41(m)(1)(i).
2. Severe property damage means substantial physical damage to property, damage to the treatment facilities which causes them to become inoperable, or substantial and permanent loss of natural resources which can reasonably be expected to occur in the absence of a bypass. Severe property damage does not mean economic loss caused by delays in production. See 40 CFR 122.41(m)(1)(ii).

B. Bypass not exceeding limitations. You may allow any bypass to occur which does not cause effluent limitations to be exceeded, but only if it also is for essential maintenance to assure efficient operation. These bypasses are not subject to the provisions of Appendix B, Subsections 13.C and 13.D. See 40 CFR 122.41(m)(2).

C. Notice.

1. Anticipated bypass. If you know in advance of the need for a bypass, you must submit prior notice, if possible at least ten days before the date of the bypass. See 40 CFR 122.41(m)(3)(i).
2. Unanticipated bypass. You must submit notice of an unanticipated bypass as required in Appendix B, Subsection 12.F (24-hour notice). See 40 CFR 122.41(m)(3)(ii).

D. Prohibition of bypass. See 40 CFR 122.41(m)(4).

1. Bypass is prohibited, and EPA may take enforcement action against you for bypass, unless:
    a. Bypass was unavoidable to prevent loss of life, personal injury, or severe property damage;
    b. There were no feasible alternatives to the bypass, such as the use of auxiliary treatment facilities, retention of untreated wastes, or maintenance during normal periods of equipment downtime. This condition is not satisfied if adequate back-up equipment should have been installed in the exercise of reasonable engineering judgment to prevent a bypass which occurred during normal periods of equipment downtime or preventive maintenance; and
    c. You submitted notices as required under Appendix B, Subsection 13.C.
2. EPA may approve an anticipated bypass, after considering its adverse effects, if EPA determines that it will meet the three conditions listed above in Appendix B, Subsection 13.D.1.

B.14. Upset.

A. Definition. Upset means an exceptional incident in which there is unintentional and temporary noncompliance with technology based permit effluent limitations because of factors beyond your reasonable control. An upset does not include noncompliance to the extent caused by operational error, improperly designed treatment facilities, inadequate treatment facilities, lack of preventive maintenance, or careless or improper operation. See 40 CFR 122.41(n)(1).

B. Effect of an upset. An upset constitutes an affirmative defense to an action brought for noncompliance with such technology based permit effluent limitations if the requirements of Appendix B, Subsection 14.C are met. No determination made during administrative review of claims that noncompliance was caused by upset, and before an action for noncompliance, is final administrative action subject to judicial review. See 40 CFR 122.41(n)(2).

C. Conditions necessary for a demonstration of upset. See 40 CFR 122.41(n)(3). A permittee who wishes to establish the affirmative defense of upset must demonstrate, through properly signed, contemporaneous operating logs, or other relevant evidence that:

   1. An upset occurred and that you can identify the cause(s) of the upset;
   2. The permitted facility was at the time being properly operated; and
   3. You submitted notice of the upset as required in Appendix B, Subsection 12.F.2.b (24 hour notice).
   4. You complied with any remedial measures required under Appendix B, Subsection 4.

D. Burden of proof. In any enforcement proceeding, you, as the one seeking to establish the occurrence of an upset, have the burden of proof. See 40 CFR 122.41(n)(4).

B.15. Retention of Records.

Copies of the SWPPP and all documentation required by this permit, including records of all data used to complete the NOI to be covered by this permit, must be retained for at least three years from the date that permit coverage expires or is terminated. This period may be extended by request of EPA at any time.

B.16. Reopener Clause.

A. Procedures for modification or revocation. Permit modification or revocation will be conducted according to 40 CFR §122.62, §122.63, §122.64 and §124.5. This includes reasons such as new information which was not available at the time of permit issuance and would have justified the application of different permit conditions at the time of issuance, including but not limited to any Reasonable and Prudent Alternatives or Reasonable and Prudent Measures developed in Endangered Species Act consultation, and/or future monitoring results.

B. Water quality protection. If there is evidence indicating that the stormwater discharges authorized by this permit cause, have the reasonable potential to cause or contribute to an excursion above any applicable water quality standard, you may be required to obtain an individual permit, or the permit may be modified to include different limitations and/or requirements.

C. Timing of permit modification. EPA may elect to modify the permit prior to its expiration (rather than waiting for the new permit cycle) to comply with any new statutory or regulatory requirements, such as for effluent limitation guidelines that may be promulgated in the course of the current permit cycle.

Appendix C - Areas Eligible for Permit Coverage

EPA can only provide permit coverage in these areas and for classes of discharges that are outside the scope of a state's NPDES program authorization.

C.1 EPA Region 1: Connecticut, Massachusetts, Maine, New Hampshire, Rhode Island, Vermont.

This permit offers NPDES permit coverage for stormwater discharges associated with industrial activity from the following areas in EPA Region 1:

Master Permit Number	Areas of Coverage/Where EPA Is Permitting Authority
CTR05I000	Indian Country within the State of Connecticut
MAR050000	Commonwealth of Massachusetts, except Indian country
MAR05I000	Indian country within the Commonwealth of Massachusetts
NHR050000	State of New Hampshire
RIR05I000	Indian country within the State of Rhode Island
VTR05F000	Areas in the State of Vermont subject to industrial activity by a Federal Operator

For stormwater discharges in EPA Region 1 outside the areas of coverage identified above, please contact your state NPDES permitting authority to obtain coverage under a state-issued NPDES permit.

C.2 EPA Region 2: New Jersey, New York, Puerto Rico, Virgin Islands.

This permit offers NPDES permit coverage for stormwater discharges associated with industrial activity from the following areas in EPA Region 2:

Master Permit Number	Areas of Coverage/Where EPA Is Permitting Authority
PRR050000	Commonwealth of Puerto Rico
NYR05I000	Indian country within the State of New York, except the lands of the St. Regis Mohawk Tribe

For stormwater discharges in EPA Region 2 outside the areas of coverage identified above, please contact your state NPDES permitting authority to obtain coverage under a state-issued NPDES permit.

C.3 EPA Region 3: Delaware, District of Columbia, Maryland, Pennsylvania, Virginia, West Virginia.

This permit offers NPDES permit coverage for stormwater discharges associated with industrial activity from the following areas in EPA Region 3:

Master Permit Number	Areas of Coverage/Where EPA Is Permitting Authority
DCR050000	District of Columbia
DER05F000	Areas in the State of Delaware subject to industrial activity by a Federal Operator
VAR05I000	Indian country within the State of Virginia

For stormwater discharges in EPA Region 3 outside the areas of coverage identified above, please contact your state NPDES permitting authority to obtain coverage under a state-issued NPDES permit.

C.4 EPA Region 4: Alabama, Florida, Georgia, Kentucky, Mississippi, North Carolina, South Carolina, Tennessee.

This permit offers NPDES permit coverage for stormwater discharges associated with industrial activity from the following areas in EPA Region 4:

Master Permit Number	Areas of Coverage/Where EPA Is Permitting Authority
ALR05I000	Indian country within the State of Alabama
FLR05I000	Indian country within the State of Florida (except for facilities on the Miccosukee and Seminole Tribe lands, contact EPA Region 4 for an individual permit application)
MSR05I000	Indian country within the State of Mississippi
NCR05I000	Indian country within the State of North Carolina
SCR05I000	Indian country within the State of South Carolina

For stormwater discharges in EPA Region 4 outside the areas of coverage identified above, please contact your state NPDES permitting authority to obtain coverage under a state-issued NPDES permit.

C.5 EPA Region 5: Illinois, Indiana, Michigan, Minnesota, Ohio, Wisconsin.

This permit offers NPDES permit coverage for stormwater discharges associated with industrial activity from the following areas in EPA Region 5:

Master Permit Number	Areas of Coverage/Where EPA Is Permitting Authority
MIR05I000	Indian country within the State of Michigan
MNR05I000	Indian country within the State of Minnesota
WIR05I000	Indian country within the State of Wisconsin (except for facilities on Sokaogon Chippewa Community lands and Bad River Band of Lake Superior Tribe of Chippewa Indians lands, see EPA Region 5 for an individual permit application).

For stormwater discharges in EPA Region 5 outside the areas of coverage identified above, please contact your state NPDES permitting authority to obtain coverage under a state-issued NPDES permit.

C.6 EPA Region 6: Arkansas, Louisiana, Oklahoma, Texas, and New Mexico (except see Region 9 for Navajo lands, and see Region 8 for Ute Mountain Reservation lands).

This permit offers NPDES permit coverage for stormwater discharges associated with industrial activity from the following areas in EPA Region 6:

Master Permit Number	Areas of Coverage/Where EPA Is Permitting Authority
LAR05I000	Indian country within the State of Louisiana
NMR050000	The State of New Mexico, except Indian country

Master Permit Number	Areas of Coverage/Where EPA Is Permitting Authority
NMR05I000	Indian country within the State of New Mexico, except Ute Mountain Reservation lands that are covered under Colorado permit COR05I000 and Navajo Reservation lands that are covered under Arizona permit AZR05I000
OKR05I000	Indian country within the State of Oklahoma
OKR05F000	Facilities in the State of Oklahoma not under the jurisdiction of the Oklahoma Department of Environmental Quality or the Oklahoma Department of Agriculture, Food and Forestry, except those on Indian Country. EPA jurisdiction facilities include SIC Codes 1311, 1381, 1382, 1389, and 5171.
TXR05F000	Facilities in the State of Texas not under the jurisdiction of the Texas Commission on Environmental Quality, except those on Indian Country. EPA-jurisdiction facilities include SIC Codes 1311, 1321, 1381, 1382, 1389, and 5171 (other than oil field service company "home base" facilities).
TXR05I000	Indian country within the State of Texas

For stormwater discharges in EPA Region 6 outside the areas of coverage identified above, please contact your state NPDES permitting authority to obtain coverage under a state-issued NPDES permit.

C.7 EPA Region 7: Iowa, Kansas, Missouri, Nebraska (except see Region 8 for Pine Ridge Reservation Lands).

This permit offer NPDES permit coverage for stormwater discharges associated with industrial activity from the following areas in EPA Region 7:

Master Permit Number	Areas of Coverage/Where EPA Is Permitting Authority
IAR05I000	Indian country within the State of Iowa
KSR05I000	Indian country within the State of Kansas
NER05I000	Indian country within the State of Nebraska, except Pine Ridge Reservation lands (see Region 8)

For stormwater discharges in EPA Region 7 outside the areas of coverage identified above, please contact your state NPDES permitting authority to obtain coverage under a state-issued NPDES permit.

C.8 EPA Region 8: Colorado, Montana, North Dakota, South Dakota, Wyoming, Utah (except see Region 9 for Goshute Reservation and Navajo Reservation Lands), the Ute Mountain Reservation in NM, and the Pine Ridge Reservation in NE.

This permit offers NPDES permit coverage for stormwater discharges associated with industrial activity from the following areas in EPA Region 8:

Master Permit Number	Areas of Coverage/Where EPA Is Permitting Authority
COR05F000	Areas in the State of Colorado, except those located on Indian country, subject to industrial activity by a Federal Operator

Master Permit Number	Areas of Coverage/Where EPA Is Permitting Authority
COR05I000	Indian country within the State of Colorado, as well as the portion of the Ute Mountain Reservation located in New Mexico
MTR05I000	Indian country within the State of Montana
NDR05I000	Indian country within the State of North Dakota, as well as that portion of the Standing Rock Reservation located in South Dakota (except for the portion of the lands within the former boundaries of the Lake Traverse Reservation, which is covered under South Dakota permit SDR05I000 listed below)
SDR05I000	Indian country within the State of South Dakota, as well as the portion of the Pine Ridge Reservation located in Nebraska and the portion of the lands within the former boundaries of the Lake Traverse Reservation located in North Dakota (except for the Standing Rock Reservation, which is covered under North Dakota permit NDR05I000 listed above)
UTR05I000	Indian country within the State of Utah, except Goshute and Navajo Reservation lands (see Region 9)
WYR05I000	Indian country within the State of Wyoming

For stormwater discharges in EPA Region 8 outside the areas of coverage identified above, please contact your state NPDES permitting authority to obtain coverage under a state-issued NPDES permit.

C.9 EPA Region 9: California, Hawaii, Nevada, Guam, American Samoa, the Commonwealth of the Northern Mariana Islands, the Confederated Tribes of the Goshute Reservation in Utah and Nevada, Indian Country within the State of Arizona including the Navajo Reservation in Utah and New Mexico and Arizona, the Duck Valley Reservation in Idaho, and the Fort McDermitt Reservation in Oregon.

This permit offers NPDES permit coverage for stormwater discharges associated with industrial activity from the following areas in EPA Region 9:

Master Permit Number	Areas of Coverage/Where EPA Is Permitting Authority
ASR050000	American Samoa
AZR05I000	Indian country within the State of Arizona, including Navajo Reservation lands in New Mexico and Utah
CAR05I000	Indian country within the State of California (facilities on the Hoopa Valley Reservation must contact EPA Region 9 for an individual permit)
GUR050000	Island of Guam
JAR050000	Johnston Atoll
MWR050000	Midway Island and Wake Island
MPR050000	Commonwealth of the Northern Mariana Islands
NVR05I000	Indian country within the State of Nevada, including the Duck Valley Reservation in Idaho, the Fort McDermitt Reservation in Oregon and the Confederated Tribes of the Goshute Reservation in Utah

For stormwater discharges in EPA Region 9 outside the areas of coverage identified above, please contact your state NPDES permitting authority to obtain coverage under a state-issued NPDES permit.

C.10 Region 10: Alaska, Idaho (except see Region 9 for Duck Valley Reservation lands), Oregon (except see Region 9 for Fort McDermitt Reservation), Washington.

This permit offers NPDES permit coverage for stormwater discharges associated with industrial activity from the following areas in EPA Region 10:

Master Permit Number	Areas of Coverage/Where EPA Is Permitting Authority
AKR05F000	Denali National Park and Preserve
AKR05I000	Indian country lands as defined in 18 U.S.C. 1151 within the State of Alaska
IDR050000	The State of Idaho, except Indian country lands
IDR05I000	Indian country lands within the State of Idaho, except Duck Valley Reservation lands, which are covered under Nevada permit NVR05I000
ORR05I000	Indian country lands within the State of Oregon, except Fort McDermitt Reservation lands, which are covered under Nevada permit NVR05I000
WAR05I000	Indian country lands within the State of Washington (facilities on the Swinomish Reservation must contact EPA Region 10 for an individual permit)
WAR05F000	Areas in the State of Washington, except those located on Indian country lands, subject to industrial activity by a Federal Operator

For stormwater discharges in EPA Region 10 outside the areas of coverage identified above, please contact your state NPDES permitting authority to obtain coverage under a state-issued NPDES permit.

Appendix D - Facilities and Activities Covered

Your permit eligibility is limited to discharges from facilities in the “sectors” of industrial activity summarized in Table D-1. These sector descriptions are based on Standard Industrial Classification (SIC) Codes and Industrial Activity Codes. References to “sectors” in this permit (e.g., sector-specific monitoring requirements) refer to these groupings.

Table D-1. Sectors of Industrial Activity Covered by This Permit

Subsector (May be subject to more than one)	SIC Code or Activity Code[1]	Activity Represented
SECTOR A: TIMBER PRODUCTS		
A1	2421	General Sawmills and Planing Mills
A2	2491	Wood Preserving
A3	2411	Log Storage and Handling
A4	2426	Hardwood Dimension and Flooring Mills
	2429	Special Product Sawmills, Not Elsewhere Classified
	2431-2439 (except 2434)	Millwork, Veneer, Plywood, and Structural Wood (see Sector W)
	2448	Wood Pallets and Skids
	2449	Wood Containers, Not Elsewhere Classified
	2451, 2452	Wood Buildings and Mobile Homes
	2493	Reconstituted Wood Products
	2499	Wood Products, Not Elsewhere Classified
	2441	Nailed and Lock Corner Wood Boxes and Shook
SECTOR B: PAPER AND ALLIED PRODUCTS		
B1	2631	Paperboard Mills
B2	2611	Pulp Mills
	2621	Paper Mills
	2652-2657	Paperboard Containers and Boxes
	2671-2679	Converted Paper and Paperboard Products, Except Containers and Boxes
SECTOR C: CHEMICALS AND ALLIED PRODUCTS		
C1	2873-2879	Agricultural Chemicals
C2	2812-2819	Industrial Inorganic Chemicals
C3	2841-2844	Soaps, Detergents, and Cleaning Preparations; Perfumes, Cosmetics, and Other Toilet Preparations
C4	2821-2824	Plastics Materials and Synthetic Resins, Synthetic Rubber, Cellulosic and Other Manmade Fibers Except Glass

Table D-1. Sectors of Industrial Activity Covered by This Permit		
Subsector (May be subject to more than one)	**SIC Code or Activity Code[1]**	**Activity Represented**
C5	2833-2836	Medicinal Chemicals and Botanical Products; Pharmaceutical Preparations; in vitro and in vivo Diagnostic Substances; and Biological Products, Except Diagnostic Substances
	2851	Paints, Varnishes, Lacquers, Enamels, and Allied Products
	2861-2869	Industrial Organic Chemicals
	2891-2899	Miscellaneous Chemical Products
	3952 (limited to list of inks and paints)	Inks and Paints, Including China Painting Enamels, India Ink, Drawing Ink, Platinum Paints for Burnt Wood or Leather Work, Paints for China Painting, Artist's Paints and Artist's Watercolors
	2911	Petroleum Refining
SECTOR D: ASPHALT PAVING AND ROOFING MATERIALS AND LUBRICANTS		
D1	2951, 2952	Asphalt Paving and Roofing Materials
D2	2992, 2999	Miscellaneous Products of Petroleum and Coal
SECTOR E: GLASS, CLAY, CEMENT, CONCRETE, AND GYPSUM PRODUCTS		
E1	3251-3259	Structural Clay Products
	3261-3269	Pottery and Related Products
E2	3271-3275	Concrete, Gypsum, and Plaster Products
E3	3211	Flat Glass
	3221, 3229	Glass and Glassware, Pressed or Blown
	3231	Glass Products Made of Purchased Glass
	3241	Hydraulic Cement
	3281	Cut Stone and Stone Products
	3291-3299	Abrasive, Asbestos, and Miscellaneous Nonmetallic Mineral Products
SECTOR F: PRIMARY METALS		
F1	3312-3317	Steel Works, Blast Furnaces, and Rolling and Finishing Mills
F2	3321-3325	Iron and Steel Foundries
F3	3351-3357	Rolling, Drawing, and Extruding of Nonferrous Metals
F4	3363-3369	Nonferrous Foundries (Castings)
F5	3331-3339	Primary Smelting and Refining of Nonferrous Metals
	3341	Secondary Smelting and Refining of Nonferrous Metals
	3398, 3399	Miscellaneous Primary Metal Products

Table D-1. Sectors of Industrial Activity Covered by This Permit		
Subsector (May be subject to more than one)	**SIC Code or Activity Code[1]**	**Activity Represented**
SECTOR G: METAL MINING (ORE MINING AND DRESSING)		
G1	1021	Copper Ore and Mining Dressing Facilities
G2	1011	Iron Ores
	1021	Copper Ores
	1031	Lead and Zinc Ores
	1041, 1044	Gold and Silver Ores
	1061	Ferroalloy Ores, Except Vanadium
	1081	Metal Mining Services
	1094, 1099	Miscellaneous Metal Ores
SECTOR H: COAL MINES AND COAL MINING-RELATED FACILITIES		
H1	1221-1241	Coal Mines and Coal Mining-Related Facilities
SECTOR I: OIL AND GAS EXTRACTION		
I1	1311	Crude Petroleum and Natural Gas
	1321	Natural Gas Liquids
	1381-1389	Oil and Gas Field Services
SECTOR J: MINERAL MINING AND DRESSING		
J1	1442	Construction Sand and Gravel
	1446	Industrial Sand
J2	1411	Dimension Stone
	1422-1429	Crushed and Broken Stone, Including Rip Rap
	1481	Nonmetallic Minerals Services, Except Fuels
	1499	Miscellaneous Nonmetallic Minerals, Except Fuels
J3	1455, 1459	Clay, Ceramic, and Refractory Materials
	1474-1479	Chemical and Fertilizer Mineral Mining
SECTOR K: HAZARDOUS WASTE TREATMENT, STORAGE, OR DISPOSAL FACILITIES		
K1	HZ	Hazardous Waste Treatment, Storage, or Disposal Facilities, including those that are operating under interim status or a permit under subtitle C of RCRA
SECTOR L: LANDFILLS, LAND APPLICATION SITES, AND OPEN DUMPS		
L1	LF	All Landfill, Land Application Sites and Open Dumps
L2	LF	All Landfill, Land Application Sites and Open Dumps, except Municipal Solid Waste Landfill (MSWLF) Areas Closed in Accordance with 40 CFR 258.60
SECTOR M: AUTOMOBILE SALVAGE YARDS		
M1	5015	Automobile Salvage Yards

Table D-1. Sectors of Industrial Activity Covered by This Permit		
Subsector (May be subject to more than one)	**SIC Code or Activity Code[1]**	**Activity Represented**
SECTOR N: SCRAP RECYCLING FACILITIES		
N1	5093	Scrap Recycling and Waste Recycling Facilities except Source-Separated Recycling
N2	5093	Source-separated Recycling Facility
SECTOR O: STEAM ELECTRIC GENERATING FACILITIES		
O1	SE	Steam Electric Generating Facilities, including coal handling sites
SECTOR P: LAND TRANSPORTATION AND WAREHOUSING		
P1	4011, 4013	Railroad Transportation
	4111-4173	Local and Highway Passenger Transportation
	4212-4231	Motor Freight Transportation and Warehousing
	4311	United States Postal Service
	5171	Petroleum Bulk Stations and Terminals
SECTOR Q: WATER TRANSPORTATION		
Q1	4412-4499	Water Transportation Facilities
SECTOR R: SHIP AND BOAT BUILDING AND REPAIRING YARDS		
R1	3731, 3732	Ship and Boat Building or Repairing Yards
SECTOR S: AIR TRANSPORTATION FACILITIES		
S1	4512-4581	Air Transportation Facilities
SECTOR T: TREATMENT WORKS		
T1	TW	Treatment Works treating domestic sewage or any other sewage sludge or wastewater treatment device or system, used in the storage, treatment, recycling, and reclamation of municipal or domestic sewage, including land dedicated to the disposal of sewage sludge that are located within the confines of the facility, with a design flow of 1.0 mgd or more, or required to have an approved pretreatment program under 40 CFR Part 403. Not included are farm lands, domestic gardens or lands used for sludge management where sludge is beneficially reused and which are not physically located in the confines of the facility, or areas that are in compliance with section 405 of the CWA
SECTOR U: FOOD AND KINDRED PRODUCTS		
U1	2041-2048	Grain Mill Products
U2	2074-2079	Fats and Oils Products
U3	2011-2015	Meat Products
	2021-2026	Dairy Products

Table D-1. Sectors of Industrial Activity Covered by This Permit		
Subsector (May be subject to more than one)	**SIC Code or Activity Code[1]**	**Activity Represented**
	2032-2038	Canned, Frozen, and Preserved Fruits, Vegetables, and Food Specialties
	2051-2053	Bakery Products
	2061-2068	Sugar and Confectionery Products
	2082-2087	Beverages
	2091-2099	Miscellaneous Food Preparations and Kindred Products
	2111-2141	Tobacco Products
SECTOR V: TEXTILE MILLS, APPAREL, AND OTHER FABRIC PRODUCT MANUFACTURING; LEATHER AND LEATHER PRODUCTS		
V1	2211-2299	Textile Mill Products
	2311-2399	Apparel and Other Finished Products Made from Fabrics and Similar Materials
	3131-3199	Leather and Leather Products (note: see Sector Z1 for Leather Tanning and Finishing)
SECTOR W: FURNITURE AND FIXTURES		
W1	2434	Wood Kitchen Cabinets
	2511-2599	Furniture and Fixtures
SECTOR X: PRINTING AND PUBLISHING		
X1	2711-2796	Printing, Publishing, and Allied Industries
SECTOR Y: RUBBER, MISCELLANEOUS PLASTIC PRODUCTS, AND MISCELLANEOUS MANUFACTURING INDUSTRIES		
Y1	3011	Tires and Inner Tubes
	3021	Rubber and Plastics Footwear
	3052, 3053	Gaskets, Packing and Sealing Devices, and Rubber and Plastic Hoses and Belting
	3061, 3069	Fabricated Rubber Products, Not Elsewhere Classified
Y2	3081-3089	Miscellaneous Plastics Products
	3931	Musical Instruments
	3942-3949	Dolls, Toys, Games, and Sporting and Athletic Goods
	3951-3955 (except 3952 – see Sector C)	Pens, Pencils, and Other Artists' Materials
	3961, 3965	Costume Jewelry, Costume Novelties, Buttons, and Miscellaneous Notions, Except Precious Metal
	3991-3999	Miscellaneous Manufacturing Industries

Table D-1. Sectors of Industrial Activity Covered by This Permit		
Subsector (May be subject to more than one)	**SIC Code or Activity Code[1]**	**Activity Represented**
SECTOR Z: LEATHER TANNING AND FINISHING		
Z1	3111	Leather Tanning and Finishing
SECTOR AA: FABRICATED METAL PRODUCTS		
AA1	3411-3499 (except 3479)	Fabricated Metal Products, Except Machinery and Transportation Equipment, and Coating, Engraving, and Allied Services
	3911-3915	Jewelry, Silverware, and Plated Ware
AA2	3479	Fabricated Metal Coating and Engraving
SECTOR AB: TRANSPORTATION EQUIPMENT, INDUSTRIAL OR COMMERCIAL MACHINERY		
AB1	3511-3599 (except 3571-3579)	Industrial and Commercial Machinery, Except Computer and Office Equipment (see Sector AC)
	3711-3799 (except 3731, 3732)	Transportation Equipment Except Ship and Boat Building and Repairing (see Sector R)
SECTOR AC: ELECTRONIC, ELECTRICAL, PHOTOGRAPHIC, AND OPTICAL GOODS		
AC1	3571-3579	Computer and Office Equipment
	3812-3873	Measuring, Analyzing, and Controlling Instruments; Photographic and Optical Goods, Watches, and Clocks
	3612-3699	Electronic and Electrical Equipment and Components, Except Computer Equipment
SECTOR AD: NON-CLASSIFIED FACILITIES		
AD1	Other stormwater discharges designated by the Director as needing a permit (see 40 CFR 122.26(a)(9)(i)(C) & (D)) or any facility discharging stormwater associated with industrial activity not described by any of Sectors A-AC. NOTE: Facilities may not elect to be covered under Sector AD. Only the Director may assign a facility to Sector AD.	

---

[1] A complete list of SIC Codes (and conversions from the newer North American Industry Classification System" (NAICS)) can be obtained from the Internet at www.census.gov/epcd/www/naics.html or in paper form from various locations in the document titled *Handbook of Standard Industrial Classifications*, Office of Management and Budget, 1987.

Appendix E - Procedures Relating to Endangered Species Protection

E.1 Assessing the Effects of Your Discharges and Discharge-Related Activities

In accordance with Part 1.1.4, you must follow the procedures in this appendix to determine which of the eligibility criteria (i.e., criterion A - E) you qualify under, if any, with respect to the protection of threatened or endangered species listed, and "critical habitat" designated, under the federal Endangered Species Act (ESA). If you do not meet one of these criteria, you are not eligible for coverage under this permit.

The procedures in this appendix will help you assess the potential effects of applicable stormwater discharges, discharge-related activities, and authorized non-stormwater discharges on federally listed threatened and endangered species and their designated critical habitat. In accordance with Part 6.2.6.1 of this permit, you must keep any documentation that supports your eligibility criteria determination, including the completed *Criterion Selection Worksheet* in Part E.4 of this appendix, with your Stormwater Pollution Prevention Plan (SWPPP).

You must complete your eligibility determination outlined in the Endangered Species Protection section of the Notice of Intent (NOI) in the NPDES eReporting Tool (NeT-MSGP) and provide all information as required on your NOI that supports the Part 1.1.4 eligibility criterion you qualify under. Note that if you have determined that you may be eligible under Criterion C3 or Criterion F, you must complete additional questions in the Endangered Species Protection section of the NOI in NeT-MSGP, unless the EPA Regional Office grants you a waiver from electronic reporting, in which case you must submit a completed *Criterion C3 Eligibility Form* to EPA a minimum of 30 days prior to submitting your NOI for permit coverage.

While coordination between you and the U.S. Fish and Wildlife Service (USFWS) and/or the National Marine Fisheries Service (NMFS)(together, the "Services") is not necessarily required in all cases, EPA encourages you to coordinate with the Services, to document that coordination, and to do so early in the planning process prior to submitting your NOI.

When evaluating the potential effects of your activities, you must consider effects to listed species or critical habitats within the "action area" of your industrial activity, as identified by the USFWS IPaC and/or the NOAA Species Directory (see Part E.4 of this appendix). Action area is defined in Appendix A of the MSGP and below:

Action Area – all areas to be affected directly or indirectly by the federal action and not merely the immediate area involved in the action. See 50 CFR 402. For the purposes of this permit and for application of Endangered Species Act requirements, the following areas are included in the definition of action area:

- The areas where stormwater discharges originate and flow from the industrial facility to the point of discharge into receiving waters. (Example: Where stormwater flows into a ditch, swale, or gully that leads to receiving waters and where listed species (such as listed amphibians) are found in the ditch, swale, or gully.)

- The areas where stormwater from industrial activities discharge into receiving waters and the areas in the immediate vicinity of the point of discharge. (Example: Where stormwater from industrial activities discharges into a stream segment that is known to harbor listed aquatic species.)

- The areas where stormwater controls will be constructed and operated, including any areas where stormwater flows to and from the stormwater controls. (Example: Where a stormwater retention pond would be built.)
- The areas upstream and/or downstream from the stormwater discharge into a stream segment that may be affected by these discharges. (Example: Where sediment discharged to a receiving stream settles downstream and impacts a breeding area of a listed aquatic species.)

E.2 Eligibility Criterion

As required by Part 1.1.4, you must certify in your NOI that you meet one of the following criteria (A - E) to be eligible for coverage under the permit. Once you determine the applicable eligibility criterion, you must:

- Specify the basis for your selection of the applicable eligibility criterion, and if required, provide documentation that is the basis for your determination with the NOI form; and
- Provide documentation in your SWPPP that is sufficient to support your determination that you satisfy the requirements of the applicable criterion.

NOTE: You must use the information from the USFWS IPaC and NOAA Species Directory (see Part E.4 of this appendix, Step 2 and 3) when determining the presence of ESA listed species and critical habitat. Attaching aerial image(s) of the site to this NOI is helpful to EPA, USFWS, and NMFS in confirming eligibility under this criterion. Please Note: NMFS' jurisdiction includes ESA-listed marine and estuarine species that spawn in inland rivers.

Criterion A. **No ESA-listed species and/or critical habitat present in action area.** No ESA-listed species and designated critical habitat(s) are likely to occur in your facility's "action area" as defined in Appendix A. You must provide a description below of the basis for selecting this criterion and provide documentation supporting your eligibility determination in your SWPPP.

Basis statement content: A basis statement supporting the selection of this criterion must identify the USFWS and NMFS information sources used. State resources are not acceptable. Attaching aerial image(s) of the site to this NOI is helpful to EPA, USFWS, and NMFS in confirming eligibility under this criterion. Note that NMFS' jurisdiction includes ESA-listed marine and estuarine species that spawn in inland rivers.

Criterion B. **Eligibility requirements met by another operator under the 2021 MSGP.** Your industrial activity's discharges and discharge-related activities were already addressed in another operator's valid certification of eligibility for your "action area" under eligibility criteria A, C, D, or E of the 2021 MSGP and you have confirmed that no additional ESA-listed species and designated critical habitat not considered in that certification may be present or located in the "action area" (e.g., due to a new species listing or critical habitat designation). To certify your eligibility under this criterion, there must be no lapse of NPDES permit coverage in the other 2021 MSGP operator's certification. By certifying eligibility under this criterion, you must comply with any conditions upon which the other operator's certification was based. You must include in your NOI the NPDES ID assigned to the other 2021 MSGP operator's authorization under this permit. If your certification is based on another 2021 MSGP operator's certification under criterion C, you must provide EPA with the relevant supporting information required (i.e., permit tracking number, industrial activity SWPPP, a description of the basis for the criterion selected) in your NOI form.

Basis statement content: A basis statement supporting the selection of this criterion must identify the eligibility criterion of the other MSGP NOI, the authorization date, and confirmation that the authorization is effective.

Criterion C1. **Facility eligible for Criterion C in the 2015 MSGP with NO CHANGE to listed species, critical habitat, or action area.** Your facility was eligible for Criterion C in the 2015 MSGP and there has been no change in your facility's action area and you have confirmed that there are no additional threatened or endangered species or designated critical habitat listed by USFWS and/or NMFS in your action area since your certification under Criterion C in the 2015 MSGP. You must provide a description of the basis of this criterion selected on your NOI form and provide documentation supporting your eligibility determination in your SWPPP.

Basis statement content: A basis statement supporting the selection of this criterion must provide the USFWS and/or NMFS resources consulted that helped you determine that there are no additional and/or critical habitat listed by under the jurisdiction of the Services in your action area.

Criterion C2. **Facility eligible for Criterion C in the 2015 MSGP with CHANGES to listed species, critical habitat, or action area.** Your facility was eligible for Criterion C in the 2015 MSGP, but there have been changes in your facility's action area, and/or additional threatened or endangered species and/or designated critical habitat have been listed by USFWS and/or NMFS in your action area since your certification under Criterion C under the 2015 MSGP. You must provide a description of the basis of this criterion selected on your NOI form and provide documentation supporting your eligibility determination in your SWPPP. You must submit your completed Criterion C2 Eligibility information at the same time that you submit your NOI, which will be held for 30 additional days prior to the standard 30-day review for all NOIs.

Basis statement content: A basis statement supporting the selection of this criterion must identify the following:

1. A description of the changes in the facility's action area (if applicable).
2. The USFWS and/or NMFS resources consulted that helped you determine that additional species and/or critical habitat have been listed/designated by either of the Services in your action area.
3. What ESA-listed species and/or designated critical habitat are located in your "action area".
4. Distance in miles between your site and the ESA-listed species and/or designated critical habitat within the action area (in miles, or state "on site" if the ESA-listed species and/or designated critical habitat is within the area to be disturbed).

5. A description of EPA approved measures you will implement or will continue to implement to ensure no likely adverse effects on ESA-listed species and/or critical habitat.

Criterion C3. **ESA-listed species and/or designated critical habitat likely to occur, but discharges not likely to adversely affect them.** ESA-listed threatened or endangered species or their designated critical habitat(s) under the jurisdiction of USFWS and/or NMFS are likely to occur in or near your facility's "action area," and you certify to EPA that your industrial activity's discharges and discharge-related activities are not likely to adversely affect ESA-listed and/or critical habitat. To certify your eligibility under this criterion, you must complete the Criterion C3 Eligibility Form, which you must complete additional questions in the Endangered Species Protection section of the NOI in NeT-MSGP, unless the EPA Regional Office grants you a waiver from electronic reporting, in which case you must submit to EPA at least 30 days prior to filing your NOI for permit coverage. After evaluation of your Criterion C3 Eligibility Form, EPA may require additional measures that you must implement to avoid or eliminate likely adverse effects on ESA-listed species and/or critical habitat from discharges and discharge-related activities. You must submit your completed Criterion C3 Eligibility information at the same time that you submit your NOI, which will be held for 30 additional days prior to the standard 30-day review for all NOIs. You must also provide a description of the basis for the criterion you selected on your NOI form and provide documentation supporting your eligibility determination in your SWPPP.

Basis statement content: A basis statement supporting the selection of this criterion must identify the following:

1. The USFWS and NMFS information resources and expertise (e.g., state or federal biologists) used to arrive at this conclusion. Any supporting documentation should explicitly state that both ESA-listed species and designated critical habitat under the jurisdiction of the USFWS and/or NMFS were considered in the evaluation.
2. What ESA-listed species and/or designated critical habitat are located in your "action area".
3. Distance in miles between your site and the ESA-listed species and/or designated critical habitat within the action area (in miles, or state "on site" if the ESA-listed species and/or designated critical habitat is within the area to be disturbed).
4. A description of EPA approved measures you will implement to ensure no likely adverse effects on ESA-listed species and/or critical habitat.
5. A statement affirming that "I agree to implement any additional measures that were determined by EPA to be necessary to ensure that my discharges and/or discharge-related activities will not have likely adverse effects on listed species and critical habitat."
6. If the EPA Regional Office granted you a waiver from electronic reporting, date you sent completed Criterion C3 Eligibility form to EPA.

Criterion D. **ESA Section 7 consultation has successfully concluded**. Consultation between a Federal Agency and the U.S. Fish and Wildlife Service and/or the National Marine Fisheries Service under section 7 of the Endangered Species Act has concluded. The consultation must have addressed the effects of the facility's discharges and discharge-related activities on ESA-listed species and/or designated critical habitat under the jurisdiction of USFWS and/or NMFS. To certify eligibility under this criterion, indicate the result of the consultation:

i. A biological opinion and/or conference opinion that concludes that the action in question (taking into account the effects of your facility's discharges and discharge-related activities) is not likely to jeopardize the continued existence of ESA-listed species, or result in the destruction or adverse modification of designated critical habitat; or

ii. Written concurrence from the applicable Service(s) with a finding that your facility's discharges and discharge-related activities are not likely to adversely affect ESA-listed species or designated critical habitat.

You must verify that the consultation does not warrant reinitiation under 50 CFR §402.16. If reinitiation of consultation is required, in order to be eligible under this criterion you must ensure consultation is reinitiated and the result of the consultation must be consistent with Criterion D (i), or (ii) above.

If eligible under Criterion D, you must also provide supporting documentation for your determination in your NOI and SWPPP, including the Biological Opinion (or ECO tracking number) or concurrence letter. You must include copies of the correspondence between yourself and the USFWS and/or NMFS in your SWPPP and your NOI.

Basis statement content: A basis statement supporting the selection of this criterion should identify the federal action agency(ies) involved, the field office/regional office(s) providing that consultation, any tracking numbers of identifiers associated with that consultation (e.g., IPaC number, ECO number), and the date the consultation was completed.

Criterion E. **Issuance of section 10 permit.** Potential take is authorized through the issuance of a permit under section 10 of the ESA by the USFWS and/or NMFS, and this authorization addresses the effects of the facility's discharges and discharge-related activities on ESA-listed species and designated critical habitat. You must include copies of the correspondence between yourself and the participating agencies in your SWPPP and your NOI.

Basis statement content: A basis statement supporting the selection of this criterion should identify whether USFWS or NMFS or both agencies provided a section 10 permit, the field office/regional office(s) providing permit(s), any tracking numbers of identifiers associated with that consultation (e.g., IPaC number, ECO number), and the date the permit was granted.

E.3 Eligibility Compliance

You must comply with any measures that formed the basis of your eligibility determination in Part 1.1.4 for the duration of your coverage under the MSGP in order to maintain your eligibility for coverage under the permit. These measures become permit requirements per Part 2.3. Documentation of these measures must be kept as part of your SWPPP (see Part 6.2.6.1).

E.4 Criterion Selection Worksheet

Instructions:

You must follow the step-by-step instructions in this worksheet in order to determine your eligibility under the Part 1.1.4. Alternatively, if you prefer to use a Biological Evaluation (or its equivalent) in making a determination of your eligibility, you should ensure all of the information requested below for the criterion you are selecting is fully addressed in the document and provided. You must attach this completed document or Biological Evaluation (or equivalent) to your SWPPP to support your Part 1.1.4 eligibility determination.

You may need the following information in order to determine your eligibility:

1) Your facility's draft Stormwater Pollution Prevention Plan (SWPPP), including information on receiving waters.
2) Any additional site-specific information related to your facility's discharges and discharge-related activities, such as the geographic location.
3) The list(s) of threatened and endangered species and/or any designated critical habitat in your action area, as acquired from the Fish and Wildlife Service and/or the National Marine Fisheries Service. Directions on how to acquire species lists is described in a subsequent section below.

   Note that much of the information needed to complete this worksheet is also needed in order to prepare your NOI for permit coverage and is information that is part of your SWPPP. You may copy and paste any information that is already required and completed in your SWPPP into this worksheet. (*You may also decide to make minor changes or additions to your SWPPP while filling out the worksheet for clarification purposes or to address any concerns that are identified below.)*

STEP 1: DETERMINE IF YOU MEET THE ELIGIBILITY REQUIREMENTS OF CRITERION B, D, or E.

I. You should first determine whether you are eligible under criterion B (because another operator has accounted for your action area in their valid certification of eligibility under the 2021 MSGP), criterion D (because of a previously completed ESA section 7 consultation), or criterion E (because of a previously issued ESA section 10 permit).

II. If you determine that your facility does not meet criterion B, D, or E (e.g., due to difference in action area described, lack of analysis of appropriate effects, new listings or designation of critical habitat), proceed to **Step 2** below.

Criterion B Eligibility Requirements

If your industrial activities were already addressed in another operator's valid certification of eligibility under the current 2021 MSGP, you may be eligible for coverage under criterion B. In order to be eligible for coverage under criterion B, you must confirm that **all** three of the following are true:

☐ You have confirmed that the other operator's certification of eligibility accounted for your action area and that the eligibility determination was valid.

☐ There has been no lapse of NPDES permit coverage in the other operator's certification.

☐ You will comply with all measures that formed the basis of the other operator's valid certification of eligibility. Provide the operator's NPDES permit number and list any measures that you must comply with in the box below (or enter "N/A" if none exist):

- **If all three of the above are true, you may select criterion B on your NOI.** You must include in your NOI the NPDES ID assigned to the other operator's authorization under this permit, and a description of the basis for the criterion selected on your NOI form, including the eligibility criterion selected in the other operator's NOI. You must include this completed Worksheet in your SWPPP.
- **If any of the above are <u>not</u> true, you may <u>not</u> select criterion B and must proceed to <u>Step 2</u>.** For example, if there are any listed species in your action area that were not addressed in the other operator's certification, you are not eligible under criterion B.

<u>Criterion D Eligibility Requirements</u>

If consultation under section 7 of the ESA has concluded, you may be eligible for coverage under criterion D. In order to be eligible for coverage under criterion D, you must confirm that **all** two of the following are true:

☐ A consultation between a federal agency and the U.S. Fish and Wildlife Service and/or the National Marine Fisheries Service under section 7 of the ESA has concluded. Consultations can be either formal or informal, and would have occurred only as a result of a separate federal action (e.g., during application for an individual wastewater discharge permit or the issuance of a wetlands dredge and fill permit), <u>and</u> the consultation must have addressed the effects of your industrial activity's discharges and discharge-related activities on all ESA-listed threatened or endangered species and all designated critical habitat in your action area. The result of this consultation must be either:

i. A biological opinion currently in effect that concludes that the action in question (taking into account the effects of your facility's discharges and discharge-related activities) is not likely to jeopardize the continued existence of listed species or result in the destruction or adverse modification of critical habitat. The biological opinion must have included the effects of your facility's discharges[1] and discharge-related activities on all the listed species and designated critical habitat in your action area. To be eligible under (i), any

---

[1] Effects of discharge includes, but is not limited to, the analysis of the hydrological, chemical, and biological effects of the discharge on listed species, their prey, and their habitat, as well as critical habitat, where designated. For example, the effects analysis would have evaluated whether the various pollutants in the discharge (e.g., TSS, metals) would adversely affect listed species through exposure to the pollutants, or to their prey or habitat. Effects that look only at short-term effects unrelated to the stormwater discharge effects to listed species are not sufficient for these purposes.

reasonable and prudent measures specified in the incidental take statement must be implemented;

ii. Written concurrence (e.g., letter of concurrence) from the applicable Service(s) with a finding that your facility's discharges and discharge-related activities are not likely to adversely affect ESA-listed species and/or designated critical habitat. The concurrence letter must have included the effects of your facility's discharges and discharge-related activities on all the ESA-listed species and/or designated critical habitat on your species list(s) acquired from the U.S. Fish and Wildlife Service and/or the National Marine Fisheries Service as part of this worksheet.

☐ The consultation does not warrant reinitiation under 50 CFR §402.16; or, if reinitiation of consultation is required (e.g., due to a new species listing or critical habitat designation; new information), you have reinitiated the consultation and the result of the consultation is consistent with the statements above. Attach a copy of any reinitiation documentation from the Services or other consulting federal agency.

- **If both of the above are true, you may select criterion D on your NOI.** You must also provide a description of the basis for the criterion selected on your NOI form and you must include this completed worksheet in your SWPPP. In both your SWPPP and NOI you must also provide the Biological Opinion (or ECO tracking number) or concurrence letter and any other documentation supporting your eligibility determination.
- **If any of the above are not true, you may not select criterion D and must proceed to Step 2.** For example, if the biological opinion or written concurrence did not include the effects of the discharge or discharge-related activities as described above (e.g., the previous consultation covered some but not all of the species or critical habitat in your action area as shown on your species list), or if the consultation is no longer valid (e.g., due to new species listings), you are not eligible under criterion D.

Criterion E Eligibility Requirements

If your industrial activities are the subject of a permit under section 10 of the ESA, and this authorization addresses the effects of your facility's discharges and discharge-related activities on ESA-listed species and designated critical habitat in your action area, you may be eligible for coverage under criterion E. In order to be eligible or coverage under criterion E, you must confirm that the following is true:

☐ A permit has been issued under section 10 of the ESA. The permit authorization specifically addresses the effects of your facility's discharges and discharge-related activities (if applicable) on all federally-listed species and designated critical habitat in your action area.

- **If the above is true, you may select criterion E on your NOI.** You must also provide a description of the basis for the criterion selected on your NOI form and must include this completed worksheet in your SWPPP. In both your SWPPP and your NOI you must provide a copy of the section 10 permit issued by the Services.
- **If the above is not true, you may not select criterion E and must proceed to Step 2.** For example, if a permit has been issued under section 10 of the ESA, but the permit authorization did not address the effects of your facility's discharges and/or discharge-related activities on all federally-listed species and designated critical

habitat in your action area, you are not eligible under criterion E, but you should attach a copy of the permit to the SWPPP for reference.

E.5 STEP 2: DETERMINE THE EXTENT OF YOUR ACTION AREA

You must determine whether species listed as either threatened or endangered, or their critical habitat(s) are located in your facility's action area (i.e., all areas to be affected directly or indirectly by the federal action and not merely the immediate area involved in the action, including areas beyond the footprint of the facility that are likely to be affected by stormwater discharges, discharge-related activities, and authorized non-stormwater discharges). Consider the following in determining the action area for your facility:

- Discharges of pollutants into downstream areas can expand the action area well beyond the footprint of your facility and the discharge point(s). Take into account the controls you will be implementing to minimize pollutants and the receiving waterbody characteristics (e.g., perennial, intermittent, ephemeral) in determining the extent of physical, chemical, and/or biotic effects of the discharges. All receiving waterbodies that could receive pollutants from your facility must be included in your action area.
- Discharge-related activities must also be accounted for in determining your action area. Discharge-related activities are any activities that cause, contribute to, or result in stormwater and authorized non-stormwater point source discharges, and measures such as the siting, construction, and operation of stormwater controls to control, reduce, or prevent pollutants from being discharged. For example, any new or modified stormwater controls that will have noise or other similar effects, and any disturbances associated with construction of controls, are part of your action area.

If you have any questions about determining the extent of your action area, you may contact EPA or the Services for assistance.https://www.epa.gov/npdes/contact-us-stormwater#regional

You must include a **map and a written description of** the action area of your facility in Attachment 1 of this appendix. You may choose to include the map that is generated from the FWS' on-line mapping tool IPaC (the *Information, Planning, and Consultation System*) located at http://ecos.fws.gov/ipac/ (see Step 3 for information about using this tool).

You must proceed to **Step 3** below.

E.6 STEP 3: DETERMINE IF LISTED THREATENED OR ENDANGERED SPECIES AND/OR CRITICAL HABITAT ARE PRESENT IN YOUR ACTION AREA.

You must determine whether species listed as either threatened or endangered under the Endangered Species Act, and/or their designated critical habitat(s) (as defined in Appendix A), are located in your facility's action area. ESA listed species and designated critical habitat are under the purview of the National Marine Fisheries Service (NMFS) and the U.S. Fish and Wildlife Service (USFWS), and in many cases, you will need to acquire species and critical habitat lists from both Services.

- For NMFS species and critical habitat information, use the following webpages, which provide up-to-date information on listed species

  (https://www.fisheries.noaa.gov/species-directory/threatened-endangered) and critical habitat https://www.fisheries.noaa.gov/national/endangered-species-conservation/critical-habitat. To determine the field office that corresponds to your facility, go to https://www.fisheries.noaa.gov/regions. Choose the Region where the project is based from the left-hand column and the office from the About Us on the right-hand column.

If the action area includes coastal waters or waters used by species that migrate between fresh and salt waters (e.g., salmon, sturgeon), you must obtain a species list from NMFS field office.

- For FWS species information, use the on-line mapping tool IPaC (the *Information, Planning, and Consultation System*) located at http://ecos.fws.gov/ipac/, and follow these steps:
    - *Select Get Started*.
    - **Search or zoom to find your location:** Use an address, city name or other location to find your facility then use the zoom in/out feature to see the entire extent of your action area on the screen..
    - **Define you action area:** Use one of the mapping features (e.g., sketch, polygon or line drawing tool) to draw your entire action area.
        - For the aquatic portion of your action area, trace the waterbody(ies) with the tool to characterize your action area.
        - If your proposal will include any upland activities (i.e., discharge-related activities), or if there is some aspect of your discharge that would potentially result in effects to terrestrial species, include the corresponding upland areas within your action area.
        - When you are done, go to confirm and press *Continue*.
    - Select *Define Project* to request an Official Species List
    - Complete the fields on the Official Species List Request page and include "(MSGP)" at the end of the project description.
        - For Classification, select "Water Quality Modification".
        - Select the appropriate requesting agency/organization type (for most operators, this should be "Other").
    - Submit the request to acquire an Official Species List, which should show both listed species as well as any designated critical habitat that are present in the action area in the previous step.
    - Note: *If a link to an Official Species List is not available on the page, follow the web link of the office(s) indicated, or contact the office directly by mail or phone if a web link is not shown*.

The principle authority for critical habitat designations and associated requirements is found at 50 CFR Parts 17 and 226.

Attach a copy of the species and critical habitat list(s) from the Service(s) to Attachment 2 of this appendix and use the list(s) to complete the rest of this worksheet. For FWS species, include the full printout from your IPaC query/Official Species List in Attachment 2. You can include the map from your IPaC query in Attachment 1. For NMFS species, include the full printout from the Species Directory with the correct Region selected.

If after following the steps you have determined that there are no listed species and/or designated critical habitat in your action area, you may be eligible for coverage under criterion A.

If you have determined that there are or may be listed species and/or designated critical habitat in your action area, you are not eligible under criterion A and must proceed to **Step 4** below.

Criterion A Eligibility Requirements

In order to be eligible for coverage under criterion A, you must confirm that the following is true:

☐ I have confirmed there to be no ESA-listed species and no critical habitat in my action area.

- **If the above is true, you may select criterion A on your NOI form.** You must also provide a description of the basis for the criterion selected on your NOI form. You must include this completed worksheet in your SWPPP. *Note: If your Official Species List from the USFWS indicated no species or critical habitat were present in your action area, include the full consultation tracking code at the top of your Official Species List in your NOI in the basis statement for Criterion A. If an Official Species List was not available on IPaC, list the contact date and name of the Service staff with whom you corresponded to verify no USFWS species or critical habitat were present in your action area.*
- If the above is not true, you may not select criterion A and must proceed to **Step 4** to determine if you can become eligible under criterion C.

Note: For existing dischargers that have previously obtained coverage under criterion A, you must verify whether ESA-protected species and/or critical habitat are expected to exist in your action area, as described above. Please note that if you now find that your action area overlaps with ESA-protected species or critical habitat, you must proceed to Step 4.

STEP 4: DETERMINE IF YOUR INDUSTRIAL FACILITY'S DISCHARGES OR DISCHARGE-RELATED ACTIVITIES ARE LIKELY TO ADVERSELY AFFECT LISTED THREATENED OR ENDANGERED SPECIES OR DESIGNATED CRITICAL HABITAT AND ANY MEASURES THAT MUST BE IMPLEMENTED TO AVOID ADVERSE EFFECTS

If in Step 3 you determined that listed species and/or designated critical habitat could exist in your action area, you must next assess whether your discharges and discharge-related activities are likely to adversely affect ESA-listed threatened or endangered species or designated critical habitat, and whether any additional measures are necessary to ensure no likely adverse effects. In order to make a determination of your facility's likelihood of adverse effects, you must complete additional questions in the Endangered Species Protection section of the NOI in NeT-MSGP, unless the EPA Regional Office grants you a waiver from electronic reporting, in which case you must complete the attached *Criterion C3 Eligibility Form* and must submit this form to EPA a minimum of 30 days prior to filing your NOI for permit coverage. After you submit your NOI containing Criterion C3 information or your *Criterion C3 Eligibility Form*, you may be contacted by EPA with additional measures that you must implement in order to ensure your eligibility under criterion C3.

Criterion C3 Eligibility Form

Instructions:

In order to be eligible for coverage under criterion C3, **you must complete the Endangered Species Protection section of the Notice of Intent in the NPDES eReporting Tool (NeT-MSGP)**. Per Part 7.1, you must submit your NOI electronically via NeT-MSGP, unless the EPA Regional Office grants you a waiver from electronic reporting, in which case you may use this paper Criterion C3 form. If using the paper form, you must complete the following form and you must submit it to EPA following the instructions in Section VII a **minimum of 30 days prior to filing your NOI for permit coverage.** After you submit your form, you may be contacted by EPA with additional measures (e.g., additional stormwater controls or modifications to your discharge- related activities) that you must implement in order to ensure your eligibility under criterion C3.

If after completing this worksheet you cannot make a determination that your discharges and discharge-related activities are not likely to adversely affect ESA listed threatened or endangered species or designated critical habitat, you must submit this completed worksheet to EPA, and you may not file your NOI for permit coverage until you receive a determination from EPA that your discharges and/or discharge-related activities are not likely to adversely affect ESA-protected species and critical habitat.

Note: Much of the information needed for this form can be obtained from your draft SWPPP which will be needed when you file your NOI.

SECTION I. OPERATOR, FACILITY, AND SITE LOCATION INFORMATION.

1) **Operator Information**

   a) **Operator Name:** ____________________

   b) **Point of Contact**

   First Name:____________________**Last Name:** ____________________

   Phone Number: ____________________

   E-mail: ____________________

2) **Facility Information**

   a) **Facility Name:** ____________________

   b) **Check which of the following applies:**

☐ I am seeking coverage under the MSGP as a new discharger or as a new source

☐ I am seeking coverage under the MSGP as an existing discharger and my facility has modifications to its discharge characteristics (e.g., changes in discharge flow or area drained, different pollutants) and/or discharge-related activities (e.g., stormwater controls)

Indicate the number of years the facility has been in operation:_______years

Provide your NPDES ID (i.e., permit tracking number) from your previous MSGP coverage: ________________

☐ I am seeking coverage under the MSGP as an existing discharger and there are no modifications to my facility.

Indicate the number of year(s) the facility has been in operation:______________year(s)

Provide your NPDES ID (i.e., permit tracking number) from your previous MSGP coverage: ________________

c) **Facility Address:**

Address 1: ____

Address 2: ____

City: _______________________ **State:** _______ **Zip Code:** _________

d) **Identify the primary industrial sector to be covered under the 2021 MSGP:**

SIC Code__________or Primary Activity Code _____

Sector___________and Subsector ________

e) **Identify the sectors of any co-located activities to be covered under the 2021 MSGP:**

Sector___________Subsector _______

Sector___________Subsector _______

Sector___________Subsector _______

Sector___________Subsector _______

Sector___________Subsector _______

Sector___________Subsector _______

f) **Estimated area of industrial activity exposed to stormwater:_acres**

g) **Provide a general description of the industrial activities that are taking place at this facility:**

3) Receiving Waters Information

List all the stormwater outfalls from your facility.				For each outfall, provide the following receiving water information:	
Discharge Point ID	Design Capacity (if known)	Latitude (decimal degrees)	Longitude (decimal degrees)	Name of the receiving water that receives stormwater from the discharge point and/or from the MS4 that the discharge point discharges to	Type of Waterbody (e.g., lake, pond, river/stream/creek, estuarine/marine water)
		_ _ _ . _ _ _ _	_ _ _ . _ _ _ _		
		_ _ _ . _ _ _ _	_ _ _ . _ _ _ _		
		_ _ _ . _ _ _ _	_ _ _ . _ _ _ _		
		_ _ _ . _ _ _ _	_ _ _ . _ _ _ _		
		_ _ _ . _ _ _ _	_ _ _ . _ _ _ _		

SECTION II. ACTION AREA

As required in Step 2 of Section E.4 of Appendix E, You must include a map and a written description of the action area of your facility in Attachment 1 of this appendix.

SECTION III. LISTED SPECIES AND CRITICAL HABITAT LIST

As required in Step 3 of Section E.4 of Appendix E., attach a copy of the species and critical habitat list(s) from the Service(s) to Attachment 2 of this appendix and use the list(s) to complete the rest of this worksheet. For FWS species, include the full printout from your IPaC query/Official Species List in Attachment 2. You can include the map from your IPaC query in Attachment 1.

Review your species list in Attachment 2, choose one of the following three statements, and follow the corresponding instructions:

Note: For the purposes of this permit, "terrestrial species" would not include animal or plant species that 1) spends any portion of its life cycle in a waterbody or wetland, or 2) if an animal, depends on prey or habitat that occurs in a waterbody or wetland. For example, shorebirds, wading birds, amphibians, and certain reptiles would not be considered terrestrial species under this definition. Please also be aware that some terrestrial animals (e.g., certain insects, amphibians) may have an aquatic egg or larval/juvenile phase.

☐ The species list includes only terrestrial species and/or their designated critical habitat. No aquatic or aquatic- dependent species or their critical habitat are present in the action area. **You may skip to Section IV of this form. You are not required to fill out Section V.**

☐ The species list includes only aquatic and/or aquatic-dependent species and/or their designated critical habitat. No terrestrial species or their critical habitat are present in the action area. **You may skip to Section V of this form and are not required to fill out Section IV.**

☐ The species list includes both terrestrial and aquatic or aquatic-dependent species and/or their designated critical habitat. **You must fill out both Sections IV and V of this form.**

SECTION IV. EVALUATION OF DISCHARGE-RELATED ACTIVITIES EFFECTS

Note: You are only required to fill out this section if your facility's action area contains terrestrial species and/or their designated critical habitat. If your action area only contains aquatic and/or aquatic-dependent species and/or their designated critical habitat, you can skip directly to Section V.

Most of the potential effects related to coverage under the MSGP are assumed to occur to aquatic and/or aquatic-dependent species. However, in some cases, potential effects to terrestrial species and/or their critical habitat should be considered as well from any discharge-related activities that occur during coverage under the MSGP. Examples of discharge-related activities that could have potential effects on listed terrestrial species or their critical habitat include the storage of materials and land disturbances associated with stormwater management-related activities (e.g., the installation or placement of stormwater control measures).

A. Select the applicable statement(s) below and follow the corresponding instructions:

☐ There are no discharge-related activities that are planned to occur during my coverage under the 2021 MSGP. You can conclude that your discharge-related activities will have no likely adverse effects, and:

- If there are any aquatic or aquatic-dependent species and/or their critical habitat in your action area, you must skip to Section V, *Evaluation of Discharge Effects,* below.
- If there are no aquatic or aquatic-dependent species, you may skip to Section VI and verify that your activities will have no likely adverse effects. You must submit this form to EPA as specified in Section VII of this form. You may select criterion C on your NOI form and may submit your NOI for permit coverage 30 days after you have submitted this *Criterion C Eligibility Form*. You must also provide a description of the basis for the criterion you selected on your NOI form, **including the species and critical habitat list(s) in your action area**, as well as any other documentation supporting your eligibility. You must also include this completed *Criterion C Eligibility Form* in your SWPPP.

☐ There are discharge-related activities planned as part of the proposal. Describe your discharge- related activities in the following box and continue to (b) below.

B. In order to ensure any discharge-related activities will have no likely adverse effects on ESA-listed threatened and endangered species and/or their designated critical habitat, you must certify that all the following are true:

☐ Discharge-related activities will occur:

- on previously cleared/developed areas of the site where maintenance and operation of the facility are currently occurring or where existing conditions of the area(s) in which the discharge-related activities will occur precludes its use by listed species (e.g., work on existing impervious surfaces, work occurring inside buildings, area is not used by species), and
- if discharge-related activities will include the establishment of structures (including, but not limited to, infiltration ponds and other controls) or any related disturbances, these structures and/or disturbances will be sited in areas that will not result in isolation or degradation of nesting, breeding, or foraging habitat or other habitat functions for listed animal species (or their designated critical habitat), and will avoid the destruction of native vegetation (including listed plant species).

☐ If vegetation removal (e.g., brush clearing) or other similar activities will occur, no terrestrial listed species that use these areas for habitat would be expected to be present during vegetation removal and these activities will not occur within critical habitat.

If all the above are true, you can conclude that your discharge-related activities will have no likely adverse effects, and:

- If there are any aquatic or aquatic-dependent species and/or critical habitat in your action area, you must skip to Section V, *Evaluation of Discharge Effects,* below.
- If there are no aquatic or aquatic-dependent species, you may skip to Section VI and verify that your activities will have no likely adverse effects. You must submit this form to EPA as specified in Section VII of this form. You may select criterion C on your NOI and may submit your NOI for permit coverage 30 days after you have submitted this completed form. You must also provide a description of the basis for the criterion you selected on your NOI form, **including the species and critical habitat list(s)**, and any other documentation supporting your eligibility. You must also include this completed *Criterion C Eligibility Form* in your SWPPP.
- **If any of the above are not true**, you cannot conclude that your discharge-related activities will have no likely adverse effects. You must complete the rest of this form (if applicable) and must submit the form to EPA for assistance in determining your eligibility for coverage.

SECTION V. EVALUATION OF DISCHARGE EFFECTS

Note: You are only required to fill out this section if your facility's action area includes aquatic and/or aquatic-dependent species and/or their critical habitat.

In this section, you will evaluate the likelihood of adverse effects from your facility's discharges. The scope of effects to consider will vary with each facility and species/critical habitat characteristics. The following are examples of discharge affects you should consider:

- *Hydrological Effects.* Stormwater discharges may adversely affect receiving waters by causing changes in water quality parameters such as turbidity, temperature, salinity, or pH. Stormwater discharges may adversely affect the immediate vicinity of the discharge point through streambank erosion and scour. These effects will vary with the amount of stormwater discharged and the volume and condition of the receiving water. Where a stormwater discharge constitutes a minute portion of the total volume of the receiving water, adverse hydrological effects are less likely.

- *Toxicity of Pollutants.* Pollutants in stormwater may have toxic effects on listed species and may adversely affect critical habitat. Exceedances of benchmarks, effluent limitation guidelines, or state or tribal water quality requirements may be indicative of potential adverse effects on listed species or critical habitat. However, some listed species may be adversely affected at pollutant concentrations below benchmarks, effluent limitation guidelines, and state or tribal water quality standards due to exposures to multiple stressors at the same time. In addition, stormwater pollutants identified in Part 6.2.3.2 of your SWPPP, but not monitored as benchmarks or effluent limitation guidelines, may also adversely affect listed species and critical habitat.

As these effects are difficult to analyze for listed species, their prey, habitat, and designated critical habitat, this form helps you to analyze your discharges to make a determination of whether your discharges will likely have adverse effects and whether there are any additional controls you can implement to ensure no likely adverse effects.

A. Evaluation of Pollutants and Controls to Avoid Adverse Effects. In this section, you must document **all** of your pollutant sources and pollutants expected to be discharged in stormwater (see Part 8). You must also document the controls you will implement to avoid adverse effects on listed aquatic and aquatic-dependent species and critical habitat. You must include specific details about the expected effectiveness of the controls in avoiding adverse effects to the listed aquatic-and aquatic-dependent species and critical habitat. Attach additional pages if needed.

Potential Pollutant Source	**Potential Pollutants**	**Controls to Avoid Adverse Effects on Listed Aquatic and Aquatic-Dependent Species and Critical Habitat.** Include information supporting why the control(s) will ensure no adverse effects, including any data you have about the effectiveness of the control(s) in reducing pollutant concentrations. You may also attach photos of
e.g., **vehicle and equipment fueling**	***e.g.,*** • **Oil & grease** • **Diesel** • **Gasoline** • **TSS** • **Antifreeze**	***e.g.,*** • **Fueling operators (including the transfer of fuel from tank trucks) will be conducted on an impervious or contained pad or under cover** • **Drip pans will be used where leaks or spills of fuel can occur and where making and breaking hose connections** • **Spill kit will be kept on-site in close proximity to potential spill areas** • **Any spills will be cleaned-up immediately using dry clean-up methods** • **Stormwater runoff will be diverted around fueling areas using diversion dikes and curbing**

Potential Pollutant Source	**Potential Pollutants**	**Controls to Avoid Adverse Effects on Listed Aquatic and Aquatic-Dependent Species and Critical Habitat.**

Potential Pollutant Source	**Potential Pollutants**	**Controls to Avoid Adverse Effects on Listed Aquatic and Aquatic-Dependent Species and Critical Habitat.**

☐ Check if you are not able to make a preliminary determination that any of your pollutants will be controlled to a level necessary to avoid adverse effects on aquatic and/or aquatic-dependent listed species and their designated critical habitat. You must check in Section VI that you are unable to make a determination of no likely adverse effects and must complete the rest of the form. You must submit your completed form to EPA for assistance in determining your eligibility for coverage.

B. Analysis of Effects Based on Past Monitoring Data. Select which of the following applies to your facility:

☐ I have no previous monitoring data for my facility because there are no applicable monitoring requirements for my facility's sector(s).

☐ I have no previous monitoring data for my facility because I am a new discharger or a new source, but I am subject to monitoring under the 2021 MSGP. You must provide information to support a conclusion that your facility's discharges are not expected to result in benchmark or numeric effluent limit exceedances that will adversely affect listed species or their critical habitat:

☐ My facility has not had any exceedances under the 2015 MSGP of any required benchmark(s) or numeric effluent limits. I comply with the applicable monitoring requirements and have not had any exceedances

☐ My facility has had exceedances of one or more benchmark(s) or numeric effluent limits under the 2015 MSGP, but I have addressed them during my coverage under the 2015 MSGP, or in my evaluation of controls to avoid adverse effects in (A) above. Describe all actions (including specific controls) that you will implement to ensure that the pollutants in your discharge(s) will not result in likely adverse effects from future exceedances.

☐ Check if your facility has had exceedances of one or more benchmarks or numeric effluent limits under the 2015 MSGP and you have not been able to address them to avoid adverse effects from future exceedances, or if you are a new discharger or a new source but you are not sure if you can avoid adverse effects from possible exceedances. You must check in Section VI that you are unable to make a determination of no likely adverse effects. You must submit your completed form to EPA for assistance in determining your eligibility for coverage. You may not file your NOI for permit coverage until you are able to make a determination that your discharges will avoid adverse effects on listed species and designated critical habitat.

SECTION VI VERIFICATION OF PRELIMINARY EFFECTS DETERMINATION

Based on Steps I – V of this form, you must verify your preliminary determination of effects on listed species and designated critical habitat from your discharges and/or discharge-related activities:

- ☐ Following the applicable Steps in I – V above, I have provided information supporting a preliminary determination that my discharges and/or discharge-related activities are not likely to adversely affect listed species and designated critical habitats.
- ☐ Following the applicable Steps in I – V above, I am **not** able to provide information supporting a preliminary determination that my discharges and/or discharge-related activities are not likely to adversely affect listed species and designated critical habitats.

Certification Information

I certify under penalty of law that this document and all attachments were prepared under my direction or supervision in accordance with a system designed to assure that qualified personnel properly gathered and evaluated the information submitted. Based on my inquiry of the person or persons who manage the system, or those persons directly responsible for gathering the information, the information submitted is, to the best of my knowledge and belief, true, accurate, and complete.

I am aware that there are significant penalties for submitting false information, including the possibility of fine and imprisonment for knowing violations.

First Name, Middle initial, Last Name

Title

Signature:____ Date:

E-mail:

SECTION VII CRITERION C ELIGIBILITY FORM SUBMISSION INSTRUCTIONS

Only if the applicable EPA Regional Office has granted you a waiver from electronic reporting, you must submit this completed form to EPA at msgpesa@epa.gov, including any attachments and any additional information that demonstrates how you will avoid or eliminate adverse effects to listed threatened and endangered species or designated critical habitat (e.g., specific controls you will implement to avoid or eliminate adverse effects). **Any missing or incomplete information may result in a delay of your coverage under the permit**.

If you have made a preliminary determination that your discharges and/or discharge-related activities are not likely to adversely affect listed species and critical habitat, this form must be submitted a minimum of 30 days prior to submitting your NOI for permit coverage under criterion C. Please note that during either the 30-day *Criterion C Eligibility Form* review period prior to your NOI submission, or within 30 days after your NOI submission and before you have been authorized for permit coverage, EPA may advise you that additional information is needed, or that there are additional measures you must implement to avoid likely adverse effects.

If you are unable to make a preliminary determination that your discharges and/or discharge-related activities are not likely to adversely affect listed species and critical habitat, this worksheet must be submitted to EPA, but you may not file your NOI for permit coverage until you have received a determination from EPA that your discharges and/or discharge-related activities are not likely to adversely affect listed species and critical habitat.

Attachment 1

Include a **map and a written description** of the action area of your facility, as required in Step 2 of Section E.4 of Appendix E. You may choose to include the map that is generated from the FWS' on-line mapping tool IPaC (the *Information, Planning, and Consultation System*) located at http://ecos.fws.gov/ipac/.

The written description of your action area that accompanies your action area map must explain your rationale for the extent of the action area drawn on your map. For example, your action area written description may look something like this:

> *The action area for the (name of your facility)'s stormwater discharges extends downstream from the outfall(s) in (name of receiving waterbody) (# of meters/feet/kilometers/miles). The downstream limit of the action area reflects the approximate distance at which the discharge waters and any pollutants would be expected to cause potential adverse effects to listed species and/or critical habitat because (insert rationale). The action area does/does not extend to the (name of receiving waterbody)'s confluence with (name of confluence waterbody) because (insert rationale).*

Note that your action area written description will be highly site-specific, depending on the expected effects of your facility's discharges and discharge-related activities, receiving waterbody characteristics, etc.

Attachment 2

List or attach the list(s) of species and critical habitat in your action area on this sheet, as required in Step 3 of Section E.4 of Appendix E. You must include a list for applicable listed NMFS and USFWS species and critical habitat. If there are listed species and/or critical habitat for only one Service, you must include a statement confirming there are no listed species and/or critical habitat for the other Service. For USFWS species, include the USFWS Official Species List full printout from your IPaC query (including the consultation code and event code at the top of the FWS printout). *Note: If your Official Species List from the USFWS indicated no species or critical habitat were present in your action area, include the consultation code and event code that can be found at the top of your Official Species List in your NOI basis statement. If an Official Species List was not available on IPaC, list the contact date, the ecological services field office and the name of the Service staff with whom you corresponded to identify the existence of any USFWS species or critical habitat present in your action area.*

Appendix F - Procedures Relating to Historic Properties Preservation

F.1 Background

Section 106 of the National Historic Preservation Act (NHPA) requires Federal agencies to take into account the effects of Federal "undertakings", such as the issuance of this permit, on historic properties that are either listed or eligible for listing on the National Register of Historic Places. To address any issues relating to historic properties in connection with the issuance of this permit, EPA has developed the screening process in this appendix that enables facility operators to appropriately consider the potential impacts, if any, from the installation of stormwater controls that involve subsurface disturbance, on historic properties and to determine whether actions can be taken, if applicable, to mitigate any such impacts. Although the coverage of individual industrial facilities under this permit does not constitute separate Federal undertakings, the screening process in this appendix provides an appropriate site-specific means of addressing historic property issues in connection with EPA's issuance of the permit.

Before an operator is eligible for coverage under the 2020 MSGP (unless otherwise noted, all references to "eligible" or "eligibility" refer only to coverage under the 2020 MSGP), the operator must meet one of the certification criteria related to historic properties included in the permit. In the event an operator cannot meet any of the certification criteria included in the permit relating to historic properties, the operator must apply for an individual permit.

You must meet one or more of the four criteria (A-D), which are also included in Part 1.1.5, to be eligible for coverage under this permit.

Key Terms

Historic Property – Prehistoric or historic districts, sites, buildings, structures, or objects that are included in or eligible for inclusion in the National Register of Historic Places, including artifacts, records, and remains that are related to and located within such properties.

***ACHP* – Advisory Council on Historic Preservation**; an independent Federal agency.

***SHPO* –** The State Historic Preservation Officer for a particular state.

***THPO or Authorized Tribal Representative* –** The Tribal Historic Preservation Officer for a particular Tribe, or if there is no THPO, the representative designated by such Tribe for NHPA purposes. Historic properties could have significance to more than one Indian tribe; therefore, all Indian tribes that attach religious and cultural significance to a historic property must be identified and included in the historic properties screening process.

Area of Potential Effects (APE) – The geographic area or areas within which an undertaking may directly or indirectly cause changes in the character or use of historic properties, if any such properties exist. The area of potential effects is influenced by the scale and nature of an undertaking and may be different for different kinds of effects caused by the undertaking.

Activities with No Potential to Have an Effect on Historic Properties

A determination that a Federal undertaking has no potential to have an effect on historic properties fulfills an agency's obligations under the NHPA. EPA has reason to believe that the vast majority of activities authorized under the MSGP have no potential to have effects on historic properties. The purpose of this permit is to control pollutants that may be transported in stormwater runoff from industrial facilities. EPA does not anticipate effects on historic properties from the pollutants in the stormwater and allowable non-stormwater discharges from these industrial facilities. Thus, to the extent EPA's issuance of this general permit authorizes discharges of such constituents, confined to existing stormwater channels or natural drainage areas; the permitting action does not have the potential to cause effects on historic properties.

In addition, the overwhelming majority of sources covered under this permit will be facilities that are seeking renewal of previous permit coverage. These existing dischargers should have already addressed NHPA issues in the 2015 MSGP as they were required to certify that they were either not affecting historic properties or they had obtained written agreement from the applicable State Historic Preservation Officer (SHPO) or Tribal Historic Preservation Officer (THPO) regarding methods of mitigating potential impacts. Both existing and new dischargers must follow the historic property screening procedures to determine their eligibility. Therefore, to the extent this permit authorizes renewal of prior coverage without relevant changes in operations, it has no potential to have an effect on historic properties.

Activities with Potential to Have an Effect on Historic Properties

EPA believes this permit may have some potential to have an effect on historic properties where permittees construct and/or install stormwater control measures that involve subsurface disturbance and impact less than one (1) acre of land to comply with this permit. (Ground disturbances of one (1) acre or more require coverage under a different permit, the Construction General Permit.) Where you have to disturb the land through the construction and/or installation of control measures, there is a possibility that artifacts, records, or remains associated with historic properties could be impacted. Therefore, if you are establishing new or altering existing control measures to manage your stormwater that will involve subsurface ground disturbance of less than one (1) acre, you will need to ensure (1) that historic properties will not be impacted by your activities or (2) that you have consulted with the appropriate SHPO, THPO, or other tribal representative regarding measures that would mitigate or prevent any adverse effects on historic properties.

Examples of Control Measures Which Involve Subsurface Disturbance

EPA reviewed typical control measures currently employed to determine which practices involve some level of earth disturbance. The types of control measures that are presumptively expected to cause subsurface ground disturbance include:

- Dikes
- Berms
- Catch Basins
- Ponds
- Ditches
- Trenches
- Culverts
- Land manipulation: contouring, sloping, and grading
- Channels
- Perimeter Drains
- Swales

EPA cautions dischargers that this list is non-inclusive. Other control measures that involve earth disturbing activities that are not on this list must also be examined for the potential to affect historic properties.

Historic Property Screening Process

You should follow the following screening process in order to certify your compliance with historic property eligibility requirements under this permit (see Part 1.1.5). The following four steps describe how applicants can meet the permit eligibility criteria for protection of historic properties under this permit:

Step One: Are you an existing facility that is resubmitting for certification under the 2021 MSGP?

If you are an existing facility you should have already addressed NHPA issues. To gain coverage under the 2015 MSGP, you were required to certify that you were either not affecting historic properties or had obtained written agreement from the relevant SHPO or THPO regarding methods of mitigating potential impacts. As long as you are not constructing or installing any new stormwater control measures then you have met eligibility Criterion A of the MSGP. After you submit your NOI, there is a 30-day waiting period during which the SHPO, THPO, or other tribal representative may review your NOI. The SHPO, THPO, or other tribal representative may request that EPA hold up authorization based on concerns about potential adverse impacts to historic properties. EPA will evaluate any such request and notify you if any additional measures to address adverse impacts to historic properties are necessary.

If you are an existing facility and will construct or install stormwater control measures that will disturb less than one (1) acre, then you should proceed to Step Three. (Note: Stormwater discharges from your facility associated with construction activity disturbing one acre or more, or that are part of a larger common plan of development or sale if the larger common plan will ultimately disturb one acre or more, are not covered under the 2021 MSGP unless in conjunction with mining activities or certain oil and gas extraction activities as specified in Sectors G, H, I, and J of this permit.)Construction activities disturbing one (1) acre or more are not eligible for coverage under this permit and may seek separate coverage under the Construction General Permit (CGP).)

If you are a new facility then you should proceed to Step Two.

Step Two: Are you constructing or installing any stormwater control measures that require subsurface disturbance, and that disturbance will be less than one (1) acre? (Note: Stormwater discharges from your facility associated with construction activity disturbing one acre or more, or that are part of a larger common plan of development or sale if the larger common plan will ultimately disturb one acre or more, are not covered under the 2021 MSGP unless in conjunction with mining activities or certain oil and gas extraction activities as specified in Sectors G, H, I, and J of this permit.) Construction activities disturbing one (1) acre or more are not eligible for coverage under this permit and may seek separate coverage under the Construction General Permit (CGP)).

If, as part of your coverage under this permit, you are not building or installing control measures on your site that cause less than one (1) acre of subsurface disturbance, then your discharge-related activities do not have the potential to have an effect on historic properties. You have no further obligations relating to historic properties. You have met eligibility Criterion A of the MSGP. After you submit your NOI, there is a 30-day waiting period during which the SHPO, THPO, or other tribal representative may review your NOI. The SHPO, THPO, or other tribal representative may request that EPA hold up authorization based on concerns about potential adverse impacts to historic properties. EPA will evaluate any such request and notify you if any additional measures to address adverse impacts to historic properties are necessary.

If the answer to the Step Two question is yes, then you should proceed to Step Three.

Step Three: Have prior earth disturbances determined that historic properties do not exist, or have prior disturbances precluded the existence of historic properties?

If previous construction either revealed the absence of historic properties or prior disturbances preclude the existence of historic properties, then you have no further obligations relating to historic properties. You have met eligibility Criterion B of the MSGP. After you submit your NOI, there is a 30-day waiting period during which the SHPO, THPO, or other tribal representative may review your NOI. The SHPO, THPO, or other tribal representative may request that EPA hold up authorization based on concerns about potential adverse impacts to historic properties. EPA will evaluate any such request and notify you if any additional measures to address adverse impacts to historic properties are necessary.

If the answer to the Step Three question is no, then you should proceed to Step Four.

Step Four: Contact the appropriate historic preservation authorities

Where you are building and/or installing control measures affecting less than one (1) acre of land to control stormwater or authorized non-stormwater discharges associated with this permit, and the answer to Step Three is no, then you should contact the relevant SHPO, THPO, or other tribal representative to determine the likelihood that artifacts, records, or remains are potentially present on your site. This may involve examining local records to determine if historic artifacts have been found in nearby areas, as well as limited surface and subsurface examination carried out by qualified professionals.

If through this process it is determined that such historic properties potentially exist and may be impacted by your construction or installation of control measures, you should contact the relevant SHPO, THPO, or tribal representative in writing and request to discuss mitigation or prevention of any adverse effects. The letter should describe your facility, the nature and location of subsurface disturbance activities that are contemplated, any known or suspected historic properties in the area, and any anticipated effects on such properties. The letter should state that if the SHPO, THPO, or tribal representative does not respond within 30 days of receiving your letter, you may submit your NOI without further consultation. EPA encourages applicants to contact the appropriate authorities as soon as possible in the event of a potential adverse effect to an historic property.

If the SHPO, THPO, or tribal representative sent you a response within 30 days of receiving your letter and you enter into, and comply with, a written agreement with the SHPO, THPO, or other tribal representative regarding how to address any adverse impacts on historic properties, you have met eligibility Criterion C. In this case, you should retain a copy of the written agreement consistent with Part 6.2.6.2 of the MSGP. After you submit your NOI, there is a 30-day waiting period during which the SHPO, THPO, or other tribal representative may review your NOI. The SHPO, THPO, or other tribal representative may request that EPA delay authorization based on concerns about potential adverse impacts to historic properties. However, EPA would generally accept any written agreement as fully addressing such concerns unless new information was brought to the Agency's attention that was not considered in your previous discussions with the SHPO, THPO or other tribal representative.

If you receive a response within 30 days after the SHPO, THPO, or tribal representative received your letter and you consult with the SHPO, THPO or tribal representative regarding adverse impacts to historic properties and measures to mitigate them but an agreement cannot be reached between you and the SHPO, THPO, or other tribal representative, you have still met the eligibility for Criterion C. In this case you should include in your SWPPP a brief description of potential effects to historic properties, the consultation process, any measures you will adopt to address the potential adverse impacts, and any significant remaining disagreements between you and the SHPO, THPO or other tribal representative. After you submit your NOI, there is a 30-day waiting period during which the SHPO, THPO, or other tribal representative may review your NOI. The SHPO, THPO, or other tribal representative may request that EPA delay authorization based on concerns about potential adverse impacts to historic properties. EPA will evaluate any such request and notify you if any additional measures to address adverse impacts to historic properties are necessary.

If you have contacted the SHPO, THPO, or tribal representative in writing regarding your potential to have an effect on historic properties and the SHPO, THPO, or tribal representative did not respond within 30 days of receiving your letter, you have met eligibility Criterion D. You are advised to get a receipt from the post office or other carrier confirming the date on which your letter was received. In this case, you should submit a copy of your letter notifying the SHPO, THPO or tribal representative of potential impacts with your NOI. After you submit your NOI, there is a 30-day waiting period during which the SHPO, THPO, or other tribal representative may review your NOI. The SHPO, THPO, or other tribal representative may request that EPA hold up authorization based on concerns about potential adverse impacts to historic properties. EPA will evaluate any such request and notify you if any additional measures to address adverse impacts to historic properties are necessary.

Addresses for State Historic Preservation Officers and Tribal Historic Preservation Officers may be found on the Advisory Council on Historic Preservation's website (https://ncshpo.org/directory/). In instances where a Tribe does not have a Tribal Historic Preservation Officer, you should contact the appropriate Tribal government office when responding to this permit eligibility condition.

For more information about your State Historic Preservation Office (SHPO) or Tribal Historic Preservation Office (THPO), please visit the National Park Service (NPS) websites at:

SHPO: https://www.nps.gov/subjects/nationalregister/state-historic-preservation-offices.htm

THPO: https://www.nps.gov/history/tribes/Tribal_Historic_Preservation_Officers_Program.htm
https://grantsdev.cr.nps.gov/THPO_Review/index.cfm

Appendix G - Notice of Intent (NOI) Form

Part 7.2 requires you to use the NPDES eReporting Tool, or "NeT", to prepare and submit your Notice of Intent (NOI). However, if the applicable EPA Regional office grants you a waiver to use a paper NOI form, and you elect to use it, you must complete and submit the following form.

Submission of this NOI constitutes notice that the operator identified in Section C of this form requests authorization to discharge pursuant to the NPDES Multi-Sector General Permit (MSGP) permit number identified in Section B of this form. Submission of this NOI also constitutes notice that the operator identified in Section C of this form meets the eligibility conditions of Part 1.1 of the MSGP for the facility identified in Section D of this form. To obtain authorization, you must submit a complete and accurate NOI form. Discharges are not authorized if your NOI is incomplete or inaccurate or if you were never eligible for permit coverage. Refer to the instructions at the end of this form to complete your NOI.

NPDES FORM 3510-6	EPA	**UNITED STATES ENVIRONMENTAL PROTECTION AGENCY** **WASHINGTON, DC 20460** **NOTICE OF INTENT (NOI) FOR STORMWATER DISCHARGES ASSOCIATED WITH INDUSTRIAL ACTIVITY UNDER THE NPDES MULTI-SECTOR GENERAL PERMIT**	OMB No. 2040-0300 OMB Approval Pending

Submission of this Notice of Intent (NOI) constitutes notice that the operator identified in Section C of this form requests authorization to discharge pursuant to the NPDES Stormwater Multi-Sector General Permit (MSGP) permit number identified in Section B of this form. Submission of this NOI also constitutes notice that the operator identified in Section C of this form meets the eligibility conditions of Part 1.1 of the MSGP for the facility identified in Section D of this form. To obtain authorization, you must submit a complete and accurate NOI form. Discharges are not authorized if your NOI is incomplete or inaccurate or if you were never eligible for permit coverage. Refer to the instructions at the end of this form to complete your NOI.

A. Approval to Use Paper NOI Form

1. Have you been granted a waiver from electronic reporting from the EPA Regional Office*? ☐ YES ☐ NO

If yes, check which waiver you have been granted, the name of the EPA Regional Office staff person who granted the waiver, and the date of approval:

Waiver granted: ☐ The owner/operator's headquarters is physically located in a geographic area (i.e., ZIP code or census tract) that is identified as under-served for broadband Internet access in the most recent report from the Federal Communications Commission.

☐ The owner/operator has issues regarding available computer access or computer capability

Name of EPA staff person that granted the waiver:

Date approval obtained: / /

*** Note: You are required to obtain approval from the applicable EPA Regional Office prior to using this paper NOI form. If you have not obtained a waiver, you must file this form electronically using the NPDES eReporting Tool (NeT) at http://water.epa.gov/polwaste/npdes/stormwater/Stormwater-eNOI-System-for-EPAs-MultiSector-General-Permit.cfm**

B. Permit Information

NPDES ID (EPA Use Only):

1. Master Permit Number: (see Appendix C of the MSGP for the list of eligible master permit numbers)
2. Are you a new discharger or a new source as defined in Appendix A? ☐ YES ☐ NO (If yes, skip to Part C of this form).
3. If you are not a new discharger or a new source, have stormwater discharges from your facility been covered previously under an NPDES permit?
   ☐ YES ☐ NO

If yes, provide the NPDES ID if you had coverage under EPA's 2015 MSGP or the NPDES ID if you had coverage under an EPA individual permit:

4. Do you have a pending enforcement action related to industrial stormwater by EPA, a state, or a citizen (to include both notices of violation (NOVs) by EPA or a state and notices of intent to bring a citizen suit)? ☐ YES ☐ NO

C. Facility Operator Information

1. Operator Information:

Operator Name:

2. Mailing Address:

Street:

City: State: ZIP Code: -

County or Similar Government Subdivision:

Phone: - - Ext.

E-mail:

2. Operator Point of Contact Information:

First Name, Middle Initial, Last Name

Title:

3. NOI Preparer Information (Complete if NOI was prepared by someone other than the certifier):

First Name, Middle Initial, Last Name

Organization:

Phone: - - Ext.

E-mail:

D. Facility Information

1. Facility Name: ☐☐☐☐☐☐☐☐☐☐☐☐☐☐☐☐☐☐☐☐☐☐☐☐☐☐☐☐☐☐☐☐

2. Facility Address:

Street/Location: ☐☐☐☐☐☐☐☐☐☐☐☐☐☐☐☐☐☐☐☐☐☐☐☐☐☐☐☐☐☐☐☐

City: ☐☐☐☐☐☐☐☐☐☐☐☐☐☐☐☐☐☐☐☐☐☐☐☐☐☐ State: ☐☐ ZIP Code: ☐☐☐☐☐-☐☐☐☐

County or Similar Government Subdivision: ☐☐☐☐☐☐☐☐☐☐☐☐☐☐☐☐☐☐☐☐☐☐☐☐☐☐☐☐☐☐☐☐

3. Latitude/Longitude for the facility:

Latitude: __ __.__ __ __ __° N (decimal degrees) Longitude: __ __ __.__ __ __ __° W (decimal degrees)

Latitude/Longitude Data Source: ☐ Maps ☐ GPS ☐ Other ____________________

If you used a USGS topographic map, what was the scale? ____________________

Horizontal Reference Datum: ☐ NAD 27 ☐ NAD 83 ☐ WGS 84

4. Is your facility located on Indian Country lands? ☐ YES ☐ NO

If yes, provide the name of the Indian tribe associated with the area of Indian country (including name of Indian reservation, if applicable):

____

5. Are you requesting coverage under this NOI as a "federal operator" as defined in Appendix A? ☐ YES ☐ NO

6. What is the ownership type of the facility?

☐ Federal Facility (U.S.Government)
☐ Privately Owned Facility
☐ Municipality
☐ County Government
☐ Corporation
☐ State Government
☐ Tribal Government
☐ School District
☐ District
☐ Mixed Ownership (e.g., Public/Private)
☐ Municipal or Water District

7. Estimated area of industrial activity at your facility exposed to stormwater:________(to the nearest quarter acre)

8. Sector-Specific Information

Identify the 4-digit Standard Industrial Classification (SIC) code or 2-letter Activity Code that best represents the products produced or services rendered for which your facility is primarily engaged, as defined in the MSGP, and the applicable sector and subsector of your primary industrial activity (See Appendix D):

Primary SIC Code ☐☐☐☐ **OR** **Primary Activity Code:** ☐☐

Sector: ☐☐ **Subsector:** ☐☐☐

Identify the applicable sector(s) and subsector(s), SIC codes, and activity codes of any co-located industrial activity for which you are requesting permit

Sector: ☐☐ **Subsector:** ☐☐☐ **Sector:** ☐☐ **Subsector:** ☐☐☐ **Sector:** ☐☐ **Subsector:** ☐☐☐

Sector: ☐☐ **Subsector:** ☐☐☐ **Sector:** ☐☐ **Subsector:** ☐☐☐ **Sector:** ☐☐ **Subsector:** ☐☐☐

If you are a Sector S (Air Transportation) facility, do you anticipate using more than 100,000 gallons of pure glycol in glycol-based deicing fluids and/or 100 tons or more of urea on an average annual basis? ☐ YES ☐ NO

If you are a Sector G (Metal Mining) facility, do you have discharges from waste rock and overburden piles? ☐ YES ☐ NO

Check the type of ore you mine at your facility:

☐ Tungsten Ore
☐ Nickel Ore
☐ Aluminum Ore
☐ Mercury Ore
☐ Iron Ore
☐ Platinum Ore
☐ Titanium Ore
☐ Vanadium Ore
☐ Molybdenum
☐ Uranium, Radium, and/or Vanadium Ore
☐ Ore not listed

9. Is your facility presently inactive and unstaffed and are there no industrial materials or activities exposed to stormwater?* ☐ YES ☐ NO

*The requirement for benchmark monitoring does not apply at a facility that is inactive and unstaffed, provided that there are no industrial materials or activities exposed to stormwater. Note that if your facility becomes inactive and unstaffed and/or industrial materials or activities become exposed to stormwater during the permit term, you must submit an NOI modification to reflect the change.

E. Discharge Information

1. By indicating "Yes" below, I confirm that I understand that the MSGP only authorizes the authorized stormwater discharges in Part 1.2.1 and the allowable non-stormwater discharges listed in Part 1.2.2. Any discharges not expressly authorized in this permit cannot become authorized or shielded from liability under CWA section 402(k) by disclosure to EPA, state, or local authorities after issuance of this permit via any means, including the Notice of Intent (NOI) to be covered by the permit, the Stormwater Pollution Prevention Plan (SWPPP), during an inspection, etc. If any discharges requiring NPDES permit coverage other than the authorized stormwater and non-stormwater discharges listed in Parts 1.2.1 and 1.2.2 will be discharged, they must be covered under another NPDES permit. ☐ YES

2. Federal Effluent Limitation Guidelines

Are you requesting permit coverage for any stormwater discharges subject to effluent limitation guidelines? ☐ YES ☐ NO

If yes, which effluent limitation guidelines apply to your stormwater discharges?

40 CFR Part/Subpart	**Eligible Discharges**	**Affected MSGP Sector**	**New Source Date**	**Check if Applicable**
Part 411, Subpart C	Runoff from material storage piles at cement manufacturing facilities	E	2/20/1974	☐
Part 418 Subpart A	Runoff from phosphate fertilizer manufacturing facilities that comes into contact with any raw materials, finished product, by-products or waste products (SIC 2874)	C	4/8/1974	☐
Part 423	Coal pile runoff at steam electric generating facilities	O	11/19/1982 10/8/1974[1]	☐
Part 429, Subpart I	Discharges resulting from spray down or intentional wetting of logs at wet deck storage areas	A	1/26/1981	☐
Part 436, Subpart B, C, or D	Mine dewatering discharges at crushed stone mines, construction sand and gravel mines, or industrial sand mines	J	N/A	☐
Part 443, Subpart A	Runoff from asphalt emulsion facilities	D	7/28/1975	☐
Part 445, Subparts A & B	Runoff from hazardous waste and non-hazardous waste landfills	K, L	2/2/2000	☐
Part 449	Runoff containing urea from airfield pavement deicing at existing and new primary airports with 1,000 or more annual non-propeller aircraft departures	S	6/15/2012	☐

[1] NSPS promulgated in 1974 were not removed via the 1982 regulation; therefore, wastewaters generated by Part 423-applicable sources that were New Sources under the 1974 regulations are subject to the 1974 NSPS.

3. Receiving Waters Information: (Attach a separate list if necessary)

List all of the stormwater discharge points from your facility. Each discharge point must be identified by a unique 3-digit ID (e.g., 001, 002). Also provide the latitude and longitude in degrees decimal for each discharge point.		**For each outfall, provide the following receiving water information:**					
		Provide the name of the first water of the U.S. that receives stormwater directly from the discharge point and/or from the MS4 that the outfall discharges to:	**If the receiving water is impaired (on the CWA 303(d) list), list the pollutants that are causing the impairment:**	**If a TMDL has been completed for this receiving waterbody, providing the following information:**	**Is this receiving water saltwater or freshwater?**	**Is this receiving water designated by the state or tribal authority under its antidegradation policy as a Tier 2 (or Tier 2.5) water (water quality exceeds levels necessary to support propagation of fish, shellfish, and wildlife and recreation in and on the water) or as a Tier 3 water (Outstanding National Resource Water)?**	***For freshwater discharges from operators in subsectors K1 and G2 only:* is this receiving water still/standing (lentic) (e.g., lake or impoundment) or flowing (lotic) (e.g., river or stream)?**
Discharge Point ID				TMDL ID:_____ Pollutants for which there is a TMDL: ____________ ____________	☐ Freshwater ☐ Saltwater	☐ Tier 2/2.5 ☐ Tier 3 (Outstanding National Resource Waters)*	☐ Still/standing ☐ Flowing
Latitude							
Longitude							
Discharge Point ID				TMDL ID:_____ Pollutants for which there is a TMDL: ____________	☐ Freshwater ☐ Saltwater	☐ Tier 2/2.5 ☐ Tier 3 (Outstanding National Resource Waters)*	☐ Still/standing ☐ Flowing
Latitude							
Longitude							
If substantially identical to other discharge point, list identical discharge point ID: ____________							
Discharge Point ID				TMDL ID:_____ Pollutants for which there is a TMDL: ____________ ____________	☐ Freshwater ☐ Saltwater	☐ Tier 2/2.5 ☐ Tier 3 (Outstanding National Resource Waters)*	☐ Still/standing ☐ Flowing
Latitude							
Longitude							
If substantially identical to other discharge point, list identical discharge point ID: ____________							

*Note: You are ineligible for coverage if you are a new discharger or new source to waters designated as Tier 3 (Outstanding National Resource Waters) for antidegradation purposes under 40 CFR 131.13(a)(3).

4. Provide the following Information about your discharge point latitude/longitude:
Latitude/Longitude Data Source:

If you used a USGS topographic map, what was the scale? ____________________

Horizontal Reference Datum: ☐ NAD 27 ☐ NAD 83 ☐ WGS 84

5. Does your facility discharge into a Municipal Separate Storm Sewer System (MS4)? ☐ YES ☐ NO
If yes, provide the name of the MS4 operator: ____

6. If you are subject to benchmark monitoring requirements for a hardness-dependent metal, what is the hardness of your receiving water(s) (see Appendix J)? ______________(mg/L)

7. For facilities in EPA Region 10: Does your facility discharge to a federal CERCLA site listed in Appendix P? ☐ YES ☐ NO

7.a. If yes, did you notify the EPA Regional Office in advance of filing your NOI, and did the EPA Regional Office determine that you are eligible for permit coverage pursuant to Part 1.1.7*? ☐ YES ☐ NO

*** Note: If you discharge to a federal CERCLA site listed in Appendix P, you are ineligible for coverage under this permit unless you notify the EPA Regional Office in advance and the EPA Regional Office determines you are eligible coverage under this permit. In determining your eligibility for coverage under this Part, the EPA Regional Office may evaluate whether you have included adequate controls and/or procedures to ensure that your discharges will not lead to recontamination of aquatic media at the CERCLA Site such that it will cause or contribute to an exceedance of a water quality standard.**

8. *For operators in New Mexico only:* Do you anticipate the discharge of groundwater or spring water from your facility? ☐ YES ☐ NO

*If yes, below you are asked to provide information on flow and potential to encounter impacted ground or spring water such that there is a potential for contamination. If potential for contamination exists, you will be asked to provide test result data to EPA Region 6 and the NMED Surface Water Quality Bureau. If the test data exceed State Water Quality Standards, the ground or spring water cannot be discharged from the facility into surface waters under this permit. Discharge to surface waters must be conducted under a separate NPDES individual permit to ensure proper treatment and disposal. If disposal will be to the ground surface or in an unlined pond, you must submit a Notice of Intent to Discharge (NOI) to the NMED Ground Water Quality Bureau. For further assistance determining whether your facility may encounter impacted groundwater, the permittee may contact the NMED Ground Water Quality Bureau at (505) 827-2965.

8.a. If yes, what is the anticipated flow rate of the groundwater or spring water? ____________________

8.b. Provide information on the potential to encounter impacted ground or spring water in the space provided below:

8.c. Using the Mapper tool located at https://gis.web.env.nm.gov/oem/ for reference, check if the following groundwater pollutant sources are located nearby the anticipated source of groundwater or spring water such that there is potential for contamination:

Project Location Relative to a Source of Potential Groundwater Contamination	**Constituents likely to be required for testing**	**Check if applicable**
Within 0.5 mile of an open Leaking Tank site	BTEX (Benzene, Toluene, Ethylbenzene, and Xylene) plus additional parameters depending on site conditions.	☐
Within 0.5 mile of an open Voluntary Remediation site	All parameters listed in 20.6.4.900 NMAC, hardness and pH (or an alternate list approved by the NMED SWQB)	☐
Within 0.5 mile of an open RCRA Corrective Action site	All parameters listed in 20.6.4.900 NMAC, hardness and pH (or an alternate list approved by the NMED SWQB)	☐
Within 0.5 mile of an open Abatement site	All parameters listed in 20.6.4.900 NMAC, hardness and pH (or an alternate list approved by the NMED SWQB)	☐
Within 0.5 mile of an open Brownfield site	All parameters listed in 20.6.4.900 NMAC, hardness and pH (or an alternate list approved by the NMED SWQB)	☐
Within 1.0 mile of a Superfund site with associated groundwater contamination	All parameters listed in 20.6.4.900 NMAC, hardness and pH (or an alternate list approved by the NMED SWQB)	☐
EPA approved-sufficiently sensitive methods must be used – approved methods are listed in 40 C.F.R. 136.3.		

8.d. If any of the above are applicable, provide a summary of test data indicating the quality of the groundwater or spring water to be discharged:

F. Stormwater Pollution Prevention Plan (SWPPP) Information

1. Has the SWPPP been prepared in advance of filing this NOI, as required?

2. SWPPP Contact Information:

First Name, Middle Initial, Last Name:

Professional Title:

Phone: - - Ext.

E-mail:

3. SWPPP Availability:

Your current SWPPP or certain information from your SWPPP must be made available through one of the following two options. Select one of the options and provide the required information*:

*** Note: You are not required to post any confidential business information (CBI) or restricted information (as defined in Appendix A) (such information may be redacted), but you must clearly identify those portions of the SWPPP that are being withheld from public access.**

☐ **Option 1**: Maintain a current copy of your SWPPP on an Internet page (Universal Resource Locator or URL).

Provide the web address URL:____

☐ **Option 2**: Provide the following information from your SWPPP:

A. Describe your onsite industrial activities exposed to stormwater (e.g., material storage; equipment fueling, maintenance, and cleaning; cutting steel beams), and potential spill and leak areas:

B. List the pollutant(s) or pollutant constituent(s) associated with each industrial activity exposed to stormwater that could be discharged in stormwater and any authorized non-stormwater discharges listed in Part 1.2.2:

C. Describe the control measures you will employ to comply with the non-numeric technology-based effluent limits required in Part 2.1.2 and Part 8, and any other measures taken to comply with the requirements in Part 2.2 Water Quality-Based Effluent Limitations (see Part 6.2.4):

D. Provide a schedule for good housekeeping and maintenance (see Part 6.2.5.1) and a schedule for all inspections required in Part 3 (see Part 6.2.5.2):

G. Endangered Species Protection

Using the instructions in Appendix E of the MSGP and the Criterion Selection Worksheet in Appendix E, Part E.4, under which criterion listed below are you eligible for coverage under this permit?* You must consider Endangered Species Act listed (ESA-listed) threatened or endangered species and/or designated critical habitat(s) under the jurisdiction of both the U.S. Fish and Wildlife Service (USFWS) and National Marine Fisheries Service (NMFS) and check only the 1 box that is the most conservative criterion that applies to your facility stormwater discharge.

*Note: You must use the information from the USFWS IPaC and NMFS Species Directory (see MSGP Appendix E, Part E.4, Step 2 and 3) when determining the presence of ESA-listed species and critical habitat. Attaching aerial image(s) of the site to this NOI is helpful to EPA, USFWS, and NMFS in confirming eligibility under this criterion. Please Note: NMFS' jurisdiction includes ESA-listed marine and estuarine species that spawn in inland rivers.

After you submit your NOI and before your NOI is authorized, EPA may notify you if any additional controls are necessary to ensure your discharges have no likely adverse effects on ESA-listed species and critical habitat.

☐ A. **No ESA-listed species and/or critical habitat present in action area.** No ESA-listed species and designated critical habitat(s) are likely to occur in your facility's "action area" as defined in Appendix A. You must provide a description below of the basis for selecting this criterion and provide documentation supporting your eligibility determination in your SWPPP. **[Basis statement content: A basis statement supporting the selection of this criterion should identify the USFWS and NMFS information sources used. State resources are not acceptable. Attaching aerial image(s) of the site to this NOI is helpful to EPA, USFWS, and NMFS in confirming eligibility under this criterion. Note that NMFS' jurisdiction includes ESA-listed marine and estuarine species that spawn in inland rivers.]**

☐ B. **Eligibility requirements met by another operator under the 2021 MSGP.** Your industrial activity's discharges and discharge-related activities were already addressed in another operator's valid certification of eligibility for your "action area" under eligibility criteria A, C, D, or E of the 2021 MSGP and you have confirmed that no additional ESA-listed species and designated critical habitat not considered in that certification may be present or located in the "action area" (e.g., due to a new species listing or critical habitat designation). To certify your eligibility under this criterion, there must be no lapse of NPDES permit coverage in the other 2021 MSGP operator's certification. By certifying eligibility under this criterion, you must comply with any conditions upon which the other operator's certification was based. You must include in your NOI the NPDES ID assigned to the other 2021 MSGP operator's authorization under this permit. If your certification is based on another 2021 MSGP operator's certification under criterion C, you must provide EPA with the relevant supporting information required (i.e., permit tracking number, industrial activity SWPPP, a description of the basis for the criterion selected) in your NOI form. **[Basis statement content: A basis statement supporting the selection of this criterion must identify the eligibility criterion of the other MSGP NOI, the authorization date, and confirmation that the authorization is effective.]**

If you select criterion B, provide the NPDES ID from the other operator's notification of authorization under this permit: ______________________

☐ C(1). **Facility eligible for Criterion C in the 2015 MSGP with NO CHANGE to listed species, critical habitat, or action area.** Your facility was eligible for Criterion C in the 2015 MSGP and there has been no change in your facility's action area and you have confirmed that there are no additional threatened or endangered species or designated critical habitat under the jurisdiction of the USFWS and/or NMFS in your action area since your certification under Criterion C in the 2015 MSGP. You must provide a description of the basis of this criterion selected on your NOI form and provide documentation supporting your eligibility determination in your SWPPP. [**Basis statement content: A basis statement supporting the selection of this criterion must provide the USFWS and/or NMFS resources consulted that helped you determine that there are no additional species and/or critical habitat under the jurisdiction of the Services in your action area.]**

☐ C(2). **Facility eligible for Criterion C in the 2015 MSGP with CHANGES to listed species, critical habitat, or action area.** Your facility was eligible for Criterion C in the 2015 MSGP, but there have been changes in your facility's action area, and/or there are additional threatened or endangered species and/or designated critical habitat under the jurisdiction of the USFWS and/or NMFS in your action area since your certification under Criterion C under the 2015 MSGP. You must provide a description of the basis of this criterion selected on your NOI form and provide documentation supporting your eligibility determination in your SWPPP. **[Basis statement content: A basis statement supporting the selection of this criterion must identify the following:**

1. A description of the changes in the facility's action area (if applicable).
2. The USFWS and/or NMFS resources consulted that helped you determine that additional species and/or critical habitat have been listed/designated by either of the Services in your action area.
3. What ESA-listed species and/or designated critical habitat are located in your "action area".
4. Distance in miles between your site and the ESA-listed species and/or designated critical habitat within the action area (in miles, state "on site" if the ESA-listed species and/or designated critical habitat is within the area to be disturbed.
5. A description of EPA approved measures you will implement or will continue to implement to ensure no likely adverse effects on ESA-listed species and/or critical habitat.]

☐ C(3). **ESA-listed species and/or designated critical habitat likely to occur, but discharges not likely to adversely affect them.** ESA-listed threatened or endangered species or their designated critical habitat(s) under the jurisdiction of USFWS and/or NMFS are likely to occur in or near your facility's "action area," and you certify to EPA that your industrial activity's discharges and discharge-related activities are not likely to adversely affect ESA-listed and/or critical habitat. To certify your eligibility under this criterion, you must complete the Criterion C Eligibility Form, which you must submit to EPA at least 30 days prior to filing your NOI for permit coverage. After evaluation of your Criterion C Eligibility Form, EPA may require additional measures that you must implement to avoid or eliminate likely adverse effects on ESA-listed species and/or critical habitat from discharges and discharge-related activities. You may submit your NOI for permit coverage 30 days after submitting to EPA your completed Criterion C Eligibility Form. You must also provide a description of the basis for the criterion you selected on your NOI form and provide documentation supporting your eligibility determination in your SWPPP.
[Basis statement content: A basis statement supporting the selection of this criterion must identify the following:

1. The USFWS and NMFS information resources and expertise (e.g., state or federal biologists) used to arrive at this conclusion. Any supporting documentation should explicitly state that both ESA-listed species and designated critical habitat under the jurisdiction of the USFWS and/or NMFS were considered in the evaluation.
2. What ESA-listed species and/or designated critical habitat are located in your "action area".
3. Distance in miles between your site and the ESA-listed species and/or designated critical habitat within the action area (in miles, state "on site" if the ESA-listed species and/or designated critical habitat is within the area to be disturbed).
4. A description of EPA approved measures you will implement to ensure no likely adverse effects on ESA-listed species and/or critical habitat
5. A statement affirming that "I submitted my completed Criterion C Eligibility Form to EPA at least 30 days prior to submitting this NOI and agree to implement any additional measures that were determined by EPA to be necessary to ensure that my discharges and/or discharge-related activities will not have likely adverse effects on listed species and critical habitat."
6. Date you sent completed Criterion C Eligibility form to EPA.]

☐ D. **ESA Section 7 consultation has successfully concluded.** Consultation between a Federal Agency and the U.S. Fish and Wildlife Service and/or the National Marine Fisheries Service under section 7 of the Endangered Species Act has concluded. The consultation must have addressed the effects of the facility's discharges and discharge-related activities on ESA-listed species and/or designated critical habitat under the jurisdiction of USFWS and/or NMFS. To certify eligibility under this criterion, indicate the result of the consultation:

1. A biological opinion and/or conference opinion that concludes that the action in question (taking into account the effects of your facility's discharges and discharge-related activities) is not likely to jeopardize the continued existence of ESA-listed species, or result in the destruction or adverse modification of designated critical habitat; or

2. Written concurrence from the applicable Service(s) with a finding that your facility's discharges and discharge-related activities are not likely to adversely affect ESA-listed species or designated critical habitat.

   You must verify that the consultation does not warrant reinitiation under 50 CFR §402.16. If reinitiation of consultation is required, in order to be eligible under this criterion you must ensure consultation is reinitiated and the result of the consultation must be consistent with Criterion D (i), or (ii) above.

   If eligible under Criterion D, you must also provide supporting documentation for your determination in your NOI and SWPPP, including the Biological Opinion (or ECO tracking number) or concurrence letter. You must include copies of the correspondence between yourself and the USFWS and/or NMFS in your SWPPP and your NOI. **[Basis statement content: A basis statement supporting the selection of this criterion should identify the federal action agency(ies) involved, the field office/regional office(s) providing that consultation, any tracking numbers of identifiers associated with that consultation (e.g., IPaC number, ECO number), and the date the consultation was completed.]**

☐ E. **Issuance of section 10 permit.** Potential take is authorized through the issuance of a permit under section 10 of the ESA by the USFWS and/or NMFS, and this authorization addresses the effects of the facility's discharges and discharge-related activities on ESA-listed species and designated critical habitat. You must include copies of the correspondence between yourself and the participating agencies in your SWPPP and your NOI. **[Basis statement content: A basis statement supporting the selection of this criterion should identify whether USFWS or NMFS or both agencies provided a section 10 permit, the field office/regional office(s) providing permit(s), any tracking numbers of identifiers associated with that consultation (e.g., IPaC number, ECO number), and the date the permit was granted.]**

H. Historic Preservation

1. If your facility is not located on Indian country lands, is your facility located on a property of religious or cultural significance to an Indian tribe?

   ☐ YES ☐ NO

   If yes, provide the name of the Indian tribe associated with the property:____

2. Using the instructions in Appendix F of the MSGP, under which historic properties preservation criterion listed in Part 1.1.4.6 are you eligible for coverage under this permit (only check 1 box)?

   ☐ A ☐ B ☐ C ☐ D

I. Certification Information

I certify under penalty of law that this document and all attachments were prepared under my direction or supervision in accordance with a system designed to assure that qualified personnel properly gathered and evaluated the information submitted. Based on my inquiry of the person or persons who manage the system, or those persons directly responsible for gathering the information, the information submitted is, to the best of my knowledge and belief, true, accurate, and complete. I am aware that there are significant penalties for submitting false information, including the possibility of fine and imprisonment for knowing violations.

First Name, Middle, Last Name: ☐☐☐☐☐☐☐☐☐☐☐☐☐ ☐ ☐☐☐☐☐☐☐☐☐☐☐☐☐☐☐☐☐☐☐☐

Title: ☐☐☐☐☐☐☐☐☐☐☐☐☐☐☐☐☐☐☐☐☐☐☐☐☐☐☐☐☐☐☐

Signature:____ Date: ☐☐ / ☐☐ / ☐☐☐☐

E-mail: ☐☐☐☐☐☐☐☐☐☐☐☐☐☐☐☐☐☐☐☐☐☐☐☐☐☐☐☐☐☐☐☐☐☐☐

Instructions for Completing EPA Form 3510-6

Notice of Intent (NOI) for Stormwater Discharges
Associated with Industrial Activity Under the NPDES Multi-Sector General Permit

This Form Replaces Form 3510-6 (06/15) Form Approved OMB No. 2040-0300

Who Must File an NOI Form

Under section 402(p) of the Clean Water Act (CWA) and regulations at 40 CFR Part 122, stormwater discharges associated with industrial activity are prohibited to waters of the United States unless authorized under a National Pollutant Discharge Elimination System (NPDES) permit. You can obtain coverage under the MSGP by submitting a completed Notice of Intent (NOI) if you are an operator of a facility:

- that is located in a jurisdiction where EPA is the permitting authority, listed in Appendix C of the MSGP,
- that discharges stormwater associated with industrial activities, identified in Appendix D of the MSGP,
- that meets the eligibility requirements in Part 1.1 of the permit,
- that has developed a stormwater pollution prevention plan (SWPPP) in accordance with Part 6 of the MSGP; and
- that installs and implements control measures in accordance with Part 2 and Part 8 to meet numeric and non-numeric effluent limits.

Completing the Form

Obtain and read a copy of the 2021 MSGP, viewable at http://water.epa.gov/polwaste/npdes/stormwater/EPA-Multi-Sector-General-Permit-MSGP.cfm. To complete this form, type or print, using uppercase letters, in the appropriate areas only. Please place each character between the marks. Abbreviate if necessary to stay within the number of characters allowed for each item. Use only one space for breaks between words, but not for punctuation marks unless they are needed to clarify your response. **Please submit original document with signature in ink - do not send a photocopied signature.**

Section A. Approval to Use Paper NOI Form

You must indicate whether you have been granted a waiver from electronic reporting from the EPA Regional Office. Note that you are not authorized to use this paper NOI form unless the EPA Regional Office has approved its use. Where you have obtained approval to use this form, indicate the waiver that you have been granted, the name of the EPA staff person who granted the waiver, and the date that approval was provided.

See http://water.epa.gov/polwaste/npdes/stormwater/Stormwater-Contacts.cfm for a list of EPA Regional Office contacts.

Section B. Permit Information

Provide the master permit number of the permit under which you are applying for coverage (see Appendix C of the general permit for the list of eligible master permit numbers).

You must indicate whether you are a new discharger or a new source (see Appendix A for the definitions). If you are not a new discharger or a new source, you must indicate whether stormwater discharges from your facility have been previously covered under another NPDES permit. If yes, you must provide the unique NPDES ID (i.e., permit tracking number) for the previous permit your facility was covered under.

You must also indicate whether you have a pending enforcement action by EPA, a state, or a citizen, related to industrial stormwater.

Section C. Facility Operator Information

Provide the legal name of the person, firm, public organization, or any other entity that operates the facility described in this NOI. An operator of a facility is the legal entity that controls the operation of the facility. Refer to Appendix A of the permit for the definition of "operator". Provide the operator's mailing address, phone number, and e-mail. Correspondence for the NOI will be sent to this address. Also provide the name and title for the operator point of contact (note that the point of contact name may be the same as the operator name).

If the NOI was prepared by someone other than the certifier (for example, if the NOI was prepared by the facility SWPPP contact or a consultant for the certifier's signature), include the full name, organization, phone number, and e-mail address of the NOI preparer.

Section D. Facility Information

Enter the official or legal name and complete address, including city, state, ZIP code, and county or similar government subdivision of the facility. If the facility lacks a street address, indicate the general location of the facility (e.g., Intersection of State Highways 61 and 34). Complete facility information must be provided for permit coverage to be granted.

Provide the latitude and longitude of your facility in decimal degrees format. The latitude and longitude of your facility can be determined in several different ways, including through the use of global positioning system (GPS) receivers, U.S. Geological Survey (USGS) topographic or quadrangle maps. Refer to http://transition.fcc.gov/mb/audio/bickel/DDDMMSS-decimal.html/ for assistance in providing the proper latitude/longitude format. For consistency, EPA requests that measurements be taken from the approximate center of the facility. Specify which method you used to determine latitude and longitude. If a USGS topographic map is used, specify the scale of the map used. Enter the horizontal reference datum for your latitude and longitude. The horizontal reference datum used on USGS topographic maps is shown on the bottom left corner of USGS topographic maps; it is also available for GPS receivers.

Indicate whether the facility is on Indian country lands, and if so, provide the name of the Indian tribe associated with the area of Indian country (including name of Indian reservation, if applicable).

Indicate whether you are seeking coverage under this permit as a "federal operator" as defined in Appendix A. Also check the ownership type for the facility (e.g., Federal Facility, Privately Owned Facility, Municipality, County Government, Corporation, State Government, Tribal Government, School District, District, Mixed Ownership [e.g., public/private], Municipal or Water District).

Enter the estimated area of industrial activity at your facility exposed to stormwater to the nearest quarter acre.

Indicate whether, during coverage under this permit, there will be stormwater discharges from paved surfaces that will be sealed or re-sealed with coal-tar where industrial activities are located.

List the four-digit Standard Industrial Classification (SIC) code or two character activity code that best describes the primary industrial activities performed by your facility under which you are required to obtain permit coverage. Your primary industrial activity includes any activities performed on-site which are (1) identified by the facility's primary SIC code and included in the descriptions of 40 CFR 122.26(b)(14)(ii), (iii), (vi), or (viii); or (2) included in the narrative descriptions of 40 CFR 122.26(b)(14)(i), (iv), (v), (vii), or (ix). See Appendix D of the MSGP for a complete list of SIC codes and activities codes covered under the MSGP. Also provide the applicable sector and subsector associated with the SIC code or activity code for your primary industrial activities. For a complete list of sector and subsector codes, see Appendix D of the MSGP.

If your facility has co-located industrial activities that are not identified as your primary industrial activity, identify the sector, subsector, SIC, and

Instructions for Completing EPA Form 3510-6

Notice of Intent (NOI) for Stormwater Discharges
Associated with Industrial Activity Under the NPDES Multi-Sector General Permit

This Form Replaces Form 3510-6 (06/15) Form Approved OMB No. 2040-0300

For Sector A facilities (Timber Products), indicate whether you manufacture, use or store creosote or creosote treated wood in areas that are exposed to precipitation.

For Sector S facilities (Air Transportation), indicate whether you anticipate that the entire airport facility will use more than 100,000 gallons of pure glycol in glycol-based deicing fluids and/or 100 tons or more of urea on an average annual basis. If so, additional effluent limits and monitoring conditions apply to your discharge (see Part 8.S of the permit).

For Sector G facilities (Metal Mining), check the type of ore(s) mined at the facility.

Indicate whether your facility is currently inactive and unstaffed. Note that if your facility becomes inactive and unstaffed and/or industrial materials or activities become exposed to stormwater during the permit term, you must submit an NOI modification to reflect the change.

Section E. Discharge Information

You must confirm that you understand that the MSGP only authorizes the allowable stormwater discharges listed in Part 1.2.1 and the allowable non-stormwater discharges listed in Part 1.2.2. Any discharges not expressly authorized under the MSGP are not covered by the MSGP or the permit shield provision of the CWA Section 402(k) and they cannot become authorized or shielded by disclosure to EPA, state, or local authorities via the NOI to be covered by the permit or by any other means (e.g., in the SWPPP or during an inspection). If any discharges requiring NPDES permit coverage other than the allowable stormwater and non-stormwater discharges listed in Parts 1.2.1 and 1.2.2 will be discharged, they must either be eliminated or covered under another NPDES permit.

Depending on your industrial activities, your facility may be subject to federal effluent limitation guidelines which include additional effluent limits and monitoring requirements for your facility. Please review these requirements, described in Part 2.1.3 of the MSGP, and check any appropriate boxes on the NOI form.

You must identify all the discharge points from your facility that discharge stormwater. Each outfall must be assigned a unique 3-digit ID (e.g., 001, 002, 003). You must also provide the latitude and longitude for each discharge point from your facility. Indicate whether any discharge points are substantially identical to a discharge point already listed, and identify the discharge point it is identical to. For each unique discharge point you list, you must specify the name of the first water of the U.S. that receives stormwater directly from the discharge point and/or from the MS4 that the discharge point discharges to. You must specify whether any receiving waters that you discharge to are listed as "impaired" as defined in Appendix A, and the pollutants for which the water is impaired. You must also check identify any Total Maximum Daily Loads (TMDL) that have been completed for any of the waters of the U.S. that you discharge to. For each unique discharge point you must indicate whether the receiving water is saltwater or freshwater, and indicate whether discharges from the facility will enter into a water of the U.S that is designated as a Tier 2, Tier 2.5, or Tier 3 water. A list of Tier 2, 2.5, and 3 waters is provided as Appendix L. If the answer is "yes", name all waters designated as Tier 2, Tier 2.5, or Tier 3 to which the facility will discharge. Note that you are ineligible for coverage if you are a new discharger or a new source to waters designated as Tier 3 (outstanding national resource waters) for antidegradation purposes under 40 CFR 131.13(a)(3).

If your facility is in subsector K1 or G2, you must also indicate, for each unique discharge point, if the receiving water is still/standing (lentic) (e.g., a lake or impoundment) or flowing (lotic) (e.g., a river or stream).

You must also provide information about the discharge point latitude/longitude, including data source, the scale (if applicable), and the horizontal reference datum. See the instructions in Section D for more information about determining the latitude and longitude.

Identify whether your facility discharges into a Municipal Separate Storm Sewer System (MS4). If yes, provide the name of the MS4 operator. If you are uncertain of the MS4 operator, contact your local government for that information.

If you are subject to any benchmark monitoring requirements for metals (see the requirements applicable to your Sector(s) in Part 8 of the permit), indicate the hardness for your receiving water(s). See Appendix J of the permit for information about determining waterbody hardness.

If you are subject to benchmark monitoring requirements for hardness-dependent metals you must also answer whether your facility discharges into any saltwater receiving waters.

If our facility is located in EPA Region 10, indicate whether your facility will discharge to a federal CERCLA site listed in Appendix P. Note that if your facility will discharge into a federal CERCLA site listed in Appendix P, you are not eligible for coverage under this permit unless you notify the EPA Regional Office in advance and the EPA Regional Office authorizes overage under this permit after you have included adequate controls and/or procedures designed to ensure that discharges will not lead to recontamination of aquatic media at the CERCLA site such that your discharge will cause or contribute to an exceedance of a water quality standard.

Operators in New Mexico, indicate whether you anticipate the discharge of groundwater or spring water from your facility. If yes, you must provide information on flow and potential to encounter impacted ground or spring water such that there is a potential for contamination. You must also use the mapper tool located at https://gis.web.env.nm.gov/oem/ to determine if the groundwater sources listed are located near the anticipated source of groundwater or spring water such that there is potential for contamination. If potential for contamination exists, you must provide a summary of test data indicating the quality of the groundwater or spring water to be discharged.

Section F. Stormwater Pollution Prevention Plan (SWPPP) Information

All facilities eligible for coverage under this permit are required to prepare a SWPPP in advance of filing the NOI, in accordance with Part 6. Indicate whether the SWPPP has been prepared in advance of filing the NOI.

Indicate the contact information (name, phone, and e-mail) for the person who developed the SWPPP for this facility.

You identify how your SWPPP information will be made available, consistent with Part 5.4 and 7.3 of the permit. If you are making your SWPPP publicly available on a web site, check Option 1 and provide the appropriate Internet URL address. If you are not providing a URL, check Option 2 and provide the selected SWPPP information on this NOI form. You may copy and paste this information directly from yourSWPPP.

Instructions for Completing EPA Form 3510-6

Notice of Intent (NOI) for Stormwater Discharges
Associated with Industrial Activity Under the NPDES Multi-Sector General Permit

This Form Replaces Form 3510-6 (06/15) Form Approved OMB No. 2040-0300

Section G. Endangered Species Protection

Using the instructions in Appendix E, indicate the Part 1.1.4.5 criterion (i.e., A, B, C, D, or E) you are eligible under with regard to the protection of federally listed endangered and threatened species and designated critical habitat. A description of the basis for the criterion selected must also be provided.

If criterion B is selected, provide the NPDES ID (i.e., permit tracking number) for the other operator who has certified their eligibility under this permit. The NPDES ID was assigned when the operator received coverage under this permit.

If criterion C is selected, you must specify the federally-listed species or designated critical habitat that are located in the "action area" of the facility. You must also indicate under which scenario you determined you were eligible to submit your NOI under criterion C using Appendix E, and answer any corresponding questions.

If criterion D or E is selected, attach copies of any communications between you and the U.S. Fish and Wildlife Service and National Marine Fisheries Service to this NOI.

Section H. Historic Preservation

If the project is not located in Indian country lands, indicate whether the project is located on a property of religious or cultural significance to an Indian tribe, and if so, provide the name of the Indian tribe associated with the property. Use the instructions in Appendix F to complete the questions on the NOI form regarding historic preservation.

Section I. Certification

Certification statement and signature (see Section B.11 of Appendix B of the MSGP for more information). Enter certifier's printed name, title and email address. Sign and date the form. (CAUTION: An unsigned or undated NOI form will prevent the granting of permit coverage.) Federal statutes provide for severe penalties for submitting false information on this application form. Federal regulations require this application to be signed as follows:

For a corporation: by a responsible corporate officer, which means: (i) a president, secretary, treasurer, or vice-president of the corporation in charge of a principal business function, or any other person who performs similar policy- or decision-making functions for the corporation, or (ii) the manager of one or more manufacturing, production, or operating facilities, provided, the manager is authorized to make management decisions which govern the operation of the regulated facility including having the explicit or implicit duty of making major capital investment recommendations, and initiating and directing other comprehensive measures to assure long-term environmental compliance with environmental laws and regulations; the manager can ensure that the necessary systems are established or actions taken to gather complete and accurate information for permit application requirements; and where authority to sign documents has been assigned or delegated to the manager in accordance with corporate procedures.

For a partnership or sole proprietorship: By a general partner or the proprietor, respectively; or

For a municipality, state, federal, or other public agency: By either a principal executive officer or ranking elected official. For purposes of this Part, a principal executive officer of a federal agency includes (i) the chief executive officer of the agency, or (ii) a senior executive officer having responsibility for the overall operations of a principal geographic unit of the agency (e.g., Regional Administrator of EPA). Include the name and title of the person signing the form and the date of signing.

An unsigned or undated NOI form will not be considered eligible for permit coverage.

Modifying Your NOI

If you have been granted a waiver from your Regional Office from electronic reporting, and if after submitting your NOI you need to correct or update any fields on this NOI form, you may do so by indicating changes on this same form.

Paperwork Reduction Act Notice

This collection of information is approved by OMB under the Paperwork Reduction Act, 44 U.S.C. 3501 et seq. (OMB Control No. 2040-0300). Responses to this collection of information are mandatory (40 CFR 122.26). An agency may not conduct or sponsor, and a person is not required to respond to, a collection of information unless it displays a currently valid OMB control number. The public reporting and recordkeeping burden for this collection of information is estimated to be 4.1 hours per response. Send comments on the Agency's need for this information, the accuracy of the provided burden estimates and any suggested methods for minimizing respondent burden to the Regulatory Support Division Director, U.S. Environmental Protection Agency (2821T), 1200 Pennsylvania Ave., NW, Washington, D.C. 20460. Include the OMB control number in any correspondence. Do not send the completed form to this address.

Submitting Your Form

If you have been granted a waiver from your Regional Office to submit a paper NOI form, you must send your NOI by mail to one of the following addresses:

For Regular U.S. Mail Delivery:
Stormwater Notice Processing Center
Mail Code 4203M, ATTN: 2021 MSGP Reports
U.S. EPA
1200 Pennsylvania Avenue, NW
Washington, DC 20460

For Overnight/Express Mail Delivery:
Stormwater Notice Processing Center
William Jefferson Clinton East Building - Room 7420
ATTN: 2021 MSGP Reports
U.S. EPA
1201 Constitution Avenue, NW
Washington, DC 20004

Visit this website for instructions on how to submit electronically:
http://water.epa.gov/polwaste/npdes/stormwater/Stormwater-eNOI- System-for-EPAs-MultiSector-General-Permit.cfm

Appendix H - Notice of Termination (NOT) Form

Part 7.2 requires you to use the NPDES eReporting Tool, or "NeT", to prepare and submit your No Exposure Certification (NEC) form. However, if you are given a waiver by the EPA Regional Office to use a paper NEC form, and you elect to use it, you must complete and submit the following form.

NPDES FORM 3510-7	EPA	**UNITED STATES ENVIRONMENTAL PROTECTION AGENCY** **WASHINGTON, DC 20460** **NOTICE OF TERMINATION (NOT) FOR STORMWATER DISCHARGES ASSOCIATED WITH INDUSTRIAL ACTIVITY UNDER THE NPDES MULTI-SECTOR GENERAL PERMIT**	OMB No. 2040-0300 OMB Approval Pending

Submission of this Notice of Termination constitutes notice that the operator identified in Section C of this form is no longer authorized to discharge pursuant to the NPDES Multi-Sector General Permit (MSGP) from the facility identified in Section D of this form. All necessary information must be included on this form. Refer to the instructions at the end of this form.

A. Approval to Use Paper NOT Form

1. Have you been granted a waiver from electronic reporting from the EPA Regional Office*? ☐ YES ☐ NO

If yes, check which waiver you have been granted, the name of the EPA Regional Office staff person who granted the waiver, and the date of approval:

Waiver granted: ☐ The owner/operator's headquarters is physically located in a geographic area (i.e., ZIP code or census tract) that is identified as under-served for broadband Internet access in the most recent report from the Federal Communications Commission.

☐ The owner/operator has issues regarding available computer access or computer capability

Name of EPA staff person that granted the waiver:

Date approval obtained: / /

*** Note: You are required to obtain approval from the applicable Regional Office prior to using this paper NOT form. If you have not obtained a waiver, you must file this form electronically using the NPDES eReporting Tool (NeT) at https://www.epa.gov/npdes/stormwater-discharges-industrial-activities**

B. Permit Information

1. NPDES ID:

2. Reason for Termination (check one only):

☐ A new owner or operator has taken over responsibility for the facility.

☐ You have ceased operations at the facility, there are not or no longer will be discharges of stormwater associated with industrial activity from the facility, and you have already implemented necessary sediment and erosion controls as required by Part 2.1.2.5.

☐ You are a Sector G, H, or J facility and you have met the applicable termination requirements.

☐ You obtained coverage under an individual or alternative general permit for all discharges required to be covered by an NPDES permit.

C. Facility Operator Information

1. Operator Name:

2. Mailing Address:

Street:

City: State: ZIP Code: -

3. Phone: - - Ext.

4. E-mail:

D. Facility Information

1. Facility Name:

2, Facility Address:

Street:

City: State: ZIP Code: -

County or Similar Government Subdivision:

E. Certification Information

I certify under penalty of law that this document and all attachments were prepared under my direction or supervision in accordance with a system designed to assure that qualified personnel properly gathered and evaluated the information submitted. Based on my inquiry of the person or persons who manage the system, or those persons directly responsible for gathering the information, the information submitted is, to the best of my knowledge and belief, true, accurate, and complete. I am aware that there are significant penalties for submitting false information, including the possibility of fine and imprisonment for knowing violations.

First Name, Middle, Last Name

Title:

Signature:________________________________ Date: __ / __ / ____

E-mail:

Instructions for Completing EPA Form 3510-7

Notice of Termination for Stormwater Discharges Associated with Industrial Activity Under the NPDES Multi-Sector General Permit

This Form Replaces Form 3510-7 (06/15) Form OMB No. 2040-0300

Who May File Notice of Termination (NOT) Form

Permittees currently covered by EPA's NPDES Stormwater Multi-Sector General Permit (MSGP or permit) must submit a Notice of Termination (NOT) within 30 days after one or more of the following conditions have been met:

- A new owner or operator has assumed responsibility for the facility;
- You have ceased operations at the facility and there are not or no longer will be discharges of stormwater associated with industrial activity from the facility and you have already implemented necessary sediment and erosion controls per Part 2.1.2.5;
- You are a Sector G, H, or J facility and you have met the applicable termination requirements; or
- You obtained coverage under an individual or alternative general permit for all discharges required to be covered by an NPDES permit.

See the MSGP Part 1.4.2 for more information.

Completing the Form

To complete this form, type or print, using uppercase letters, in the appropriate areas only. Please place each character between the marks. Abbreviate if necessary to stay within the number of characters allowed for each item. Use only one space for breaks between words, but not for punctuation marks unless they are needed to clarify your response. Please submit original document with signature in ink - do not send a photocopied signature.

Section A. Approval to Use Paper NOT Form

You must indicate whether you have been granted a waiver from electronic reporting from the EPA Regional Office. Note that you are not authorized to use this paper NOT form unless the EPA Regional Office has approved its use. Where you have obtained approval to use this form, indicate the waiver that you have been granted, the name of the EPA Regional Office staff person who granted the waiver, and the date that approval was provided. See https://www.epa.gov/npdes/contact-us-stormwater for a list of EPA Regional Office contacts.

Section B. Permit Information

Enter the existing NPDES ID (i.e., NOI tracking number) assigned to your permit authorization.

Indicate your reason for submitting this NOT by checking the appropriate box. Check only one box (see MSGP Part 1.4.2 for more information).

Section C. Facility Operator Information

Provide the legal name of the person, firm, public organization, or any other entity that operates the facility described in this NOT. An operator of a facility is the legal entity that controls the operation of the facility. Refer to Appendix A of the permit for the definition of "operator". Provide the operator's mailing address, phone number, and e-mail.

Section D. Facility Information

Enter the official or legal name and complete street address, including city, state, ZIP code, and county or similar government subdivision of the facility. If the facility lacks a street address, indicate the general location of the facility (e.g., Intersection of State Highways 61 and 34). Complete facility information must be provided for termination of permit coverage to be valid.

Section E. Certification Information

All NOTs must be signed as follows:

For a corporation: By a responsible corporate officer. For the purpose of this Section, a responsible corporate officer means: (i)a president, secretary, treasurer, or vice-president of the corporation in charge of a principal business function, or any other person who performs similar policy- or decision-making functions for the corporation, or (ii) the manager of one or more manufacturing, production, or operating facilities, provided, the manager is authorized to make management decisions which govern the operation of the regulated facility including having the explicit or implicit duty of making major capital investment recommendations, and initiating and directing other comprehensive measures to assure long-term environmental compliance with environmental laws and regulations; the manager can ensure that the necessary systems are established or actions taken to gather complete and accurate information for permit application requirements; and where authority to sign documents has been assigned or delegated to the manager in accordance with corporate procedures.

For a partnership or sole proprietorship: By a general partner or the proprietor, respectively; or

For a municipality, state, federal, or other public agency: By either a principal executive officer or ranking elected official. For purposes of this Part, a principal executive officer of a federal agency includes (i) the chief executive officer of the agency, or (ii) a senior executive officer having responsibility for the overall operations of a principal geographic unit of the agency (e.g., Regional Administrator of EPA). Include the name and title of the person signing the form and the date of signing.

Include the name, title, and e-mail address of the person signing the form and the date of signing. An unsigned or undated NOT form will not be considered valid termination of permit coverage.

Paperwork Reduction Act Notice

This collection of information is approved by OMB under the Paperwork Reduction Act, 44 U.S.C. 3501 et seq. (OMB Control No. 2040-0300). Responses to this collection of information are mandatory (40 CFR 122.26). An agency may not conduct or sponsor, and a person is not required to respond to, a collection of information unless it displays a currently valid OMB control number. The public reporting and recordkeeping burden for this collection of information is estimated to be 0.5 hours per response. Send comments on the Agency's need for this information, the accuracy of the provided burden estimates and any suggested methods for minimizing respondent burden to the Regulatory Support Division Director, U.S. Environmental Protection Agency (2821T), 1200 Pennsylvania Ave., NW, Washington, D.C. 20460. Include the OMB control number in any correspondence. Do not send the completed form to this address.

Instructions for Completing EPA Form 3510-7

Notice of Termination for Stormwater Discharges
Associated with Industrial Activity Under the NPDES Multi-Sector General Permit

This Form Replaces Form 3510-7 (06/15) Form OMB No. 2040-0300

Submitting Your Form

If you have been granted a waiver from your Regional Office to submit a paper NOT form, you must send your NOT by mail to one of the following addresses:

For Regular U.S. Mail Delivery:

Stormwater Notice Processing Center
Mail Code 4203M, ATTN: 2020 MSGP Reports
U.S. EPA
1200 Pennsylvania Avenue, NW
Washington, DC 20460

For Overnight/Express Mail Delivery:

Stormwater Notice Processing Center
William Jefferson Clinton East Building - Room 7420
ATTN: 2020 MSGP Reports
U.S. EPA
1201 Constitution Avenue, NW Washington, DC 20004

Visit this website for instructions on how to submit electronically: https://www.epa.gov/npdes/stormwater-discharges-industrial-activities

Appendix I - Annual Report Form

Part 7.2 requires you to use the NPDES eReporting Tool, or "NeT", to prepare and submit your Annual Report. However, if you are given a waiver by the EPA Regional Office to use a paper annual report form, and you elect to use it, you must complete and submit the following form.

NPDES FORM 6100-28

UNITED STATES ENVIRONMENTAL PROTECTION AGENCY
WASHINGTON, DC 20460
ANNUAL REPORT FOR STORMWATER DISCHARGES ASSOCIATED WITH INDUSTRIAL ACTIVITY UNDER THE NPDES MULTI-SECTOR GENERAL PERMIT

OMB No. 2040-0300
OMB Approval Pending

A. Approval to Use Paper Annual Report Form

1. Have you been granted a waiver from electronic reporting from the EPA Regional Office*? ☐ YES ☐ NO

If yes, check which waiver you have been granted, the name of the EPA Regional Office staff person who granted the waiver, and the date of approval:

Waiver granted: ☐ The owner/operator's headquarters is physically located in a geographic area (i.e., ZIP code or census tract) that is identified as under-served for broadband Internet access in the most recent report from the Federal Communications Commission.

☐ The owner/operator has issues regarding available computer access or computer capability

Name of EPA staff person that granted the waiver:

Date approval obtained: / /

*** Note: You are required to obtain approval from the applicable EPA Regional Office prior to using this paper annual report form. If you have not obtained a waiver, you must file this form electronically using the NPDES eReporting Tool (NeT) at https://www.epa.gov/npdes/stormwater-discharges-industrial-activities**

B. Permit Information

1. NPDES ID:

C. Facility Information

1. Facility Name:

2. Facility Phone: - - Ext.

3. Facility Mailing Address:

Street:

City: State: ZIP Code: -

County or Similar Government Subdivision:

4. Point of Contact:

First Name, Middle Initial, Last Name

D. General Findings

1. Provide a summary of your past year's routine facility inspection documentation, including dates (see Part 3.1.6 of the permit). In addition, if you are an operator of an airport facility (Sector S) that is subject to the airport effluent limitations guidelines, and are complying with the MSGP Part 8.S.8.1 effluent limitation through the use of non-urea-containing deicers, provide a statement certifying that you do not use pavement deicers containing urea (e.g., "Urea was not used at [name of airport] for pavement deicing in the past year and will also not be used in 2021." (Note: Operators of airport facilities that are complying with Part 8.S.8.1 by meeting the numeric effluent limitation for ammonia do not need to include this statement.)

2. Provide a summary of your past year's quarterly visual assessment documentation, including dates (see Part 3.2.3 of the permit).

3. Provide a summary of your past year's corrective action and/or advanced implementation measures (AIM) documentation (See Part 5.1.3 of the permit). (Note: If corrective action is not yet completed at the time of submission of this annual report, you must describe the status of any outstanding corrective action(s).) Note that you must modify your SWPPP based on the corrective actions and deadlines required under Part 5. Also describe any incidents of noncompliance in the past year or currently ongoing, or if none, provide a statement that you are in compliance with the permit.

E. Certification Information

I certify under penalty of law that this document and all attachments were prepared under my direction or supervision in accordance with a system designed to assure that qualified personnel properly gathered and evaluated the information submitted. Based on my inquiry of the person or persons who manage the system, or those persons directly responsible for gathering the information, the information submitted is, to the best of my knowledge and belief, true, accurate, and complete. I am aware that there are significant penalties for submitting false information, including the possibility of fine and imprisonment for knowing violations.

First Name, Middle, Last Name ☐☐☐☐☐☐☐☐☐☐☐☐☐ ☐ ☐☐☐☐☐☐☐☐☐☐☐☐☐☐☐☐☐☐☐☐

Title: ☐☐☐☐☐☐☐☐☐☐☐☐☐☐☐☐☐☐☐☐☐☐☐☐☐☐☐☐☐☐☐

Signature:____ Date: ☐☐ / ☐☐ / ☐☐☐☐

E-mail: ☐☐☐☐☐☐☐☐☐☐☐☐☐☐☐☐☐☐☐☐☐☐☐☐☐☐☐☐☐☐☐

Instructions for Completing EPA Form 6100-28
Annual Report for Stormwater Discharges
Associated with Industrial Activity Under the NPDES Multi-Sector General Permit

This Form Replaces Form 6100-28 (06/15) OMB No. 2040-0300

Who Must File an Annual Report

Operators must submit an Annual Report to EPA electronically, per Part 7.4, by January 30th for each year of permit coverage containing information generated from the past calendar year.

Completing the Form

To complete this form, type or print, using uppercase letters, in the appropriate areas only. Please place each character between the marks. Abbreviate if necessary to stay within the number of characters allowed for each item. Use only one space for breaks between words, but not for punctuation marks unless they are needed to clarify your response. Please submit original document with signature in ink - do not send a photocopied signature.

Section A. Approval to Use Paper Annual Report Form

You must indicate whether you have been granted a waiver from electronic reporting from the EPA Regional Office. Note that you are not authorized to use this paper form unless the EPA Regional Office has approved its use. Where you have obtained approval to use this form, indicate the waiver that you have been granted, the name of the EPA staff person who granted the waiver, and the date that approval was provided. See https://www.epa.gov/npdes/contact-us-stormwater for a list of EPA Regional Office contacts.

Section B. Permit Information

Provide the NPDES ID (i.e., NOI tracking number) assigned to your facility.

Section C. Facility Information

Enter the official or legal name, phone number, and complete street address, including city, state, ZIP code, and county or similar government subdivision, for the facility that is covered by the NPDES ID identified in Section B. If the facility lacks a street address, indicate the general location of the facility (e.g., Intersection of State Highways 61 and 34). Also provide a point of contact name for the facility.

Section D. General Findings

To complete this section you must provide the following information in your annual report:

1. A summary of your past year's routine facility inspection documentation, including inspection dates, required by Part 3.1.6 of the permit.
2. A summary of your past year's quarterly visual assessment documentation, including visual assessment dates, required by Part 3.2.3 of the permit.
3. Information copied or summarized from the corrective action and/or advanced implementation measures (AIM) documentation required per Part 5.1.3 (if applicable). If corrective action and/or advanced implementation measures are not yet completed at the time of submission of this Annual Report, you must describe the status of any outstanding corrective action(s)/advanced implementation measures. You must also describe any incidents of noncompliance in the past year or currently ongoing, or if none, provide a statement that you are in compliance with the permit.

Section E. Certification Information

The Annual Report must be signed by a person described below, or by a duly authorized representative of that person.

For a corporation: By a responsible corporate officer. For the purpose of this Section, a responsible corporate officer means:

(i) a president, secretary, treasurer, or vice-president of the corporation in charge of a principal business function, or any other person who performs similar policy- or decision-making functions for the corporation, or (ii) the manager of one or more manufacturing, production, or operating facilities, provided, the manager is authorized to make management decisions which govern the operation of the regulated facility including having the explicit or implicit duty of making major capital investment recommendations, and initiating and directing other comprehensive measures to assure long-term environmental compliance with environmental laws and regulations; the manager can ensure that the necessary systems are established or actions taken to gather complete and accurate information for permit application requirements; and where authority to sign documents has been assigned or delegated to the manager in accordance with corporate procedures.

For a partnership or sole proprietorship: By a general partner or the proprietor, respectively; or

For a municipality, state, federal, or other public agency: By either a principal executive officer or ranking elected official. For purposes of this Part, a principal executive officer of a federal agency includes (i) the chief executive officer of the agency, or (ii) a senior executive officer having responsibility for the overall operations of a principal geographic unit of the agency (e.g., Regional Administrator of EPA). Include the name and title of the person signing the form and the date of signing.

A person is a duly authorized representative only if:

1. The authorization is made in writing by a person described above;
2. The authorization specifies either an individual or a position having responsibility for the overall operation of the regulated facility or activity such as the position of plant manager, operator of a well or a well field, superintendent, position of equivalent responsibility, or an individual or position having overall responsibility for environmental matters for the company, (A duly authorized representative may thus be either a named individual or any individual occupying a named position.) and
3. The written authorization is submitted to the Director.

An unsigned or undated Annual Report form will be considered incomplete.

Paperwork Reduction Act Notice

This collection of information is approved by OMB under the Paperwork Reduction Act, 44 U.S.C. 3501 et seq. (OMB Control No. 2040-0300). Responses to this collection of information are mandatory (40 CFR 122.26). An agency may not conduct or sponsor, and a person is not required to respond to, a collection of information unless it displays a currently valid OMB control number. The public reporting and recordkeeping burden for this collection of information is estimated to be 1 hour per response. Send comments on the Agency's need for this information, the accuracy of the provided burden estimates and any suggested methods for minimizing respondent burden to the Regulatory Support Division Director, U.S. Environmental Protection Agency (2821T), 1200 Pennsylvania Ave., NW, Washington, D.C. 20460. Include the OMB control number in any correspondence. Do not send the completed form to this address.

Instructions for Completing EPA Form 6100-28
Annual Report for Stormwater Discharges
Associated with Industrial Activity Under the NPDES Multi-Sector General Permit

This Form Replaces Form 6100-28 (06/15) OMB No. 2040-0300

Submitting Your Form

If you have been granted a waiver from your Regional Office to submit a paper Annual Report form, you must send your Annual Report form by mail to one of the following addresses:

For Regular U.S. Mail Delivery:

Stormwater Notice Processing Center
Mail Code 4203M, ATTN: 2020 MSGP Reports
U.S. EPA
1200 Pennsylvania Avenue, NW
Washington, DC 20460

For Overnight/Express Mail Delivery:

Stormwater Notice Processing Center
William Jefferson Clinton East Building - Room 7420
ATTN: 2020 MSGP Reports
U.S. EPA
1201 Constitution Avenue, NW
Washington, DC 20004

Visit this website for instructions on how to submit electronically: https://www.epa.gov/npdes/stormwater-discharges-industrial-activities

Appendix J - Calculating Hardness in Freshwater Receiving Waters for Hardness Dependent Metals

Overview

For any sectors required to conduct benchmark samples for a hardness-dependent metal, EPA includes 'hardness ranges' from which benchmark values are determined. To determine which hardness range to use, you must collect data on the hardness of your receiving water(s). Once the site-specific hardness data have been collected, the corresponding benchmark value for each metal is determined by comparing where the hardness data fall within hardness ranges, as shown in Table 1. You only need to determine hardness for your discharges into freshwater as the benchmark values for metals do not vary for discharges to saline waters.

Table 1. ***Hardness Ranges to Be Used to Determine Benchmark Values for Cadmium, Lead, Nickel, Silver, and Zinc.***

All Units (mg/L)	Benchmark Values (µg/L, total)				
	Cadmium	Lead	Nickel	Silver	Zinc
0-24.99	0.49	14	145	0.37	37
25-49.99	0.73	24	203	0.80	52
50-74.99	1.2	45	314	1.9	80
75-99.99	1.7	69	418	3.3	107
100-124.99	2.1	95	518	5.0	132
125-149.99	2.6	123.	614	7.1	157
150-174.99	3.1	152	707	9.4	181
175-199.99	3.5	182	798	12	204
200-224.99	4.0	213	888	15	227
225-249.99	4.4	246	975	18	249
250+	4.7	262	1019	20	260

How to Determine Hardness for Hardness-Dependent Parameters in Freshwater.

You may select one of three methods to determine hardness, including: individual grab sampling, grab sampling by a group of operators which discharge to the same receiving water, or using third-party data. Regardless of the method used, you are responsible for documenting the procedures used for determining hardness values. The hardness value is required to be submitted to EPA with your Notice of Intent (NOI) so that your electronic Discharge Monitoring Report (DMR) which you will submit through Net-DMR will include the appropriate limits. You must retain all report and monitoring data in accordance with Part 7.8 of the permit. The three method options for determining hardness are detailed in the following sections.

i. Permittee Samples for Receiving Stream Hardness

This method involves collecting samples in the receiving water and submitting these to a laboratory for analysis. If you elect to sample your receiving water(s) and submit samples for analysis, hardness must be determined from the closest intermittent or perennial stream downstream of your point of discharge. The sample can be collected during either dry or wet weather. Collection of the sample during wet weather is more representative of conditions during stormwater discharges; however, collection of in-stream samples during wet weather events may be impracticable or present safety issues.

Hardness must be sampled and analyzed using approved methods as described in 40 CFR Part 136 (Guidelines Establishing Test Procedures for the Analysis of Pollutants).

ii. Group Monitoring for Receiving Stream Hardness

You can be part of a group of permittees discharging to the same receiving waters and collect samples that are representative of the hardness values for all members of the group. In this scenario, hardness of the receiving water must be determined using 40 CFR Part 136 procedures and the results shared by group members. To use the same results, hardness measurements must be taken on a stream reach within a reasonable distance of the discharge points of each of the group members.

iii. Collection of Third-Party Hardness Data

You can submit receiving stream hardness data collected by a third party provided the results are collected consistent with the approved 40 CFR Part 136 methods. These data may come from a local water utility, previously conducted stream reports, TMDLs, peer reviewed literature, other government publications, or data previously collected by the permittee. Data should be less than 10 years old.

Water quality data for many of the nation's surface waters are available on-line or by contacting EPA or a state environmental agency. EPA's data system STORET, short for STOrage and RETrieval, is a repository for receiving water quality, biological, and physical data and is used by state environmental agencies, EPA and other federal agencies, universities, private citizens, and many others. Similarly, state environmental agencies and the U.S. Geological Service (USGS) also have water quality data available that, in some instances, can be accessed online. "Legacy STORET" codes for hardness include: 259 hardness, carbonate; 260 hardness, noncarbonated; and 261 calcium + magnesium, while more recent, "Modern STORET" data codes include: 00900 hardness, 00901 carbonate hardness, and 00902 noncarbonate hardness; or the discrete measurements of calcium (00915) and magnesium (00925) can be used to calculate hardness. Hardness data historically has been reported as "carbonate," "noncarbonate," or "Ca + Mg." If these are unavailable, then individual results for calcium (Ca) and magnesium (Mg) may be used to calculate hardness using the following equation:

$$\text{mg/L } CaCO_3 = 2.497\ (\text{Ca mg/L}) + 4.118\ (\text{Mg mg/L})$$

When interpreting the data for carbonate and non-carbonate hardness, note that total hardness is equivalent to the sum of carbonate and noncarbonate hardness if both forms are reported. If only carbonate hardness is reported, it is more than likely that noncarbonate hardness is absent and the total hardness is equivalent to the available carbonate hardness.

Appendix K - No Exposure Certification (NEC) Form

Part 7.2 requires you to use the NPDES eReporting Tool, or “NeT”, to prepare and submit your No Exposure Certification (NEC) form. However, if you are given a waiver by the EPA Regional Office to use a paper NEC form, and you elect to use it, you must complete and submit the following form.

NPDES FORM 3510-11	EPA	**UNITED STATES ENVIRONMENTAL PROTECTION AGENCY WASHINGTON, DC 20460 NO EXPOSURE CERTIFICATION (NEC) FOR EXCLUSION FROM EPA'S MULTI-SECTOR GENERAL PERMIT FOR STORMWATER DISCHARGES ASSOCIATED WITH INDUSTRIAL ACTIVITY (MSGP)**	OMB No. 2040-0300 OMB Approval Pending

Submission of this No Exposure Certification (NEC) constitutes notice that the operator identified in Section C does not require permit authorization under EPA's Stormwater Multi Sector General Permit for its stormwater discharges associated with industrial activity from the facility identified in Section D of this form due to the existence of a condition of no exposure.

A condition of no exposure exists at an industrial facility when all industrial materials and activities are protected by a storm resistant shelter to prevent exposure to rain, snow, snowmelt, and/or runoff. Industrial materials or activities include, but are not limited to, material handling equipment or activities, industrial machinery, raw materials, intermediate products, by-products, final products, or waste products. Material handling activities include the storage, loading and unloading, transportation, or conveyance of any raw material, intermediate product, final product or waste product. A storm resistant shelter is not required for the following industrial materials and activities:

- drums, barrels, tanks, and similar containers that are tightly sealed, provided those containers are not deteriorated and do not leak. "Sealed" means banded or otherwise secured and without operational taps or valves;
- adequately maintained vehicles used in material handling; and
- final products, other than products that would be mobilized in stormwater discharges (e.g., rock salt).

A NEC must be provided for each facility qualifying for the no exposure exclusion. In addition, the exclusion from NPDES permitting is available on a facility-wide basis only, not for individual outfalls. If any industrial activities or materials are or will be exposed to precipitation, the facility is not eligible for the no exposure exclusion.

By signing and submitting this NEC form, the operator in Section C is certifying that a condition of no exposure exists at its facility or site, and is obligated to comply with the terms and conditions of 40 CFR 122.26(g).

A. Approval to Use Paper NEC Form

1. Have you been granted a waiver from electronic reporting from the EPA Regional Office*? ☐ YES ☐ NO

If yes, check which waiver you have been granted, the name of the EPA Regional Office staff person who granted the waiver, and the date of approval:

Waiver granted: ☐ The owner/operator's headquarters is physically located in a geographic area (i.e., ZIP code or census tract) that is identified as under-served for broadband Internet access in the most recent report from the Federal Communications Commission.

☐ The owner/operator has issues regarding available computer access or computer capability

Name of EPA staff person that granted the waiver: ☐☐☐☐☐☐☐☐☐☐☐☐☐☐☐☐☐☐☐☐☐☐☐☐☐☐☐☐☐☐☐

Date approval obtained: ☐☐ / ☐☐ / ☐☐☐☐

*** Note: You are required to obtain approval from the applicable EPA Regional Office prior to using this paper NEC form. If you have not obtained a waiver, you must file this form electronically using the NPDES eReporting Tool (NeT) at https://www.epa.gov/npdes/stormwater-discharges-industrial-activities**

B. Reason for Submission

Select the purpose for filling out this form (check only 1).

☐ **To obtain a new NEC.** Fill in Sections C, D, E and F.

☐ **To discontinue an existing NEC**. Select this option if you would like to discontinue an existing NEC because your facility is no longer subject to regulation under 40 CFR 122.26 (e.g., the facility has ceased the industrial activity that necessitated the NEC)*. Provide the following information and fill out Section G.

Provide the existing NPDES ID for the NEC that you would like to discontinue: ☐☐☐☐☐☐☐☐☐

1. Are you a new discharger or a new source as defined in Appendix A? ☐ YES ☐ NO (If yes, skip to Part C of this form).

*** Note that if your facility no longer qualifies for the NEC because permit coverage is required for exposed industrial materials or activities, you should not check this box, and must instead file for coverage under the Multi-Sector General Permit (MSGP) or an individual permit. Your NEC will be automatically discontinued after you obtain coverage under the MSGP or an individual permit.**

C. Facility Operator Information

1. Operator Name: ☐☐☐☐☐☐☐☐☐☐☐☐☐☐☐☐☐☐☐☐☐☐☐☐☐☐☐☐☐☐☐

2. Mailing Address:

Street: ☐☐☐☐☐☐☐☐☐☐☐☐☐☐☐☐☐☐☐☐☐☐☐☐☐☐☐☐☐☐☐

City: ☐☐☐☐☐☐☐☐☐☐☐☐☐☐☐☐☐☐☐☐☐☐☐☐☐☐ State: ☐☐ ZIP Code: ☐☐☐☐☐ - ☐☐☐☐

3. Phone: ☐☐☐ - ☐☐☐ - ☐☐☐☐ Ext. ☐☐☐☐

4. E-mail: ☐☐☐☐☐☐☐☐☐☐☐☐☐☐☐☐☐☐☐☐☐☐☐☐☐☐☐☐☐☐☐

5. Operator Point of Contact Information:

First Name, Middle Initial, Last Name

Title:

D. Facility Information

1. Facility Name:

2, Facility Address:

Street/Location:

City: State: ZIP Code: -

County or Similar Government Subdivision:

3. Latitude/Longitude for the facility:

Latitude: __ __.__ __ __ __° N (decimal degrees) Longitude: __ __ __.__ __ __ __° W (decimal degrees)

Latitude/Longitude Data Source: ☐ Maps ☐ GPS ☐ Other ____________________

If you used a USGS topographic map, what was the scale? ____________________

Horizontal Reference Datum: ☐ NAD 27 ☐ NAD 83 ☐ WGS 84

4. Is your facility located on Indian Country lands? ☐ YES ☐ NO

If yes, provide the name of the Indian tribe associated with the area of Indian country (including name of Indian reservation, if applicable):
____

5. Are you a "federal operator" as defined in Appendix A? ☐ YES ☐ NO

6. What is the ownership type of the facility?

☐ Federal Facility (U.S. Government)	☐ Privately Owned Facility	☐ Municipality	☐ County Government
☐ Corporation	☐ State Government	☐ Tribal Government	☐ School District
☐ District	☐ Mixed Ownership (e.g., Public/Private)	☐ Municipal or Water District	

7. Have stormwater discharges from your facility been covered previously under an NPDES permit? ☐ YES ☐ NO

If yes, provide the NPDES ID if you had coverage under EPA's MSGP or the NPDES permit number if you had coverage under an EPA individual permit: ____________________

8. Has your facility previously been covered by a no exposure exclusion? ☐ YES ☐ NO

If yes, provide the NPDES ID for your previous no exposure exclusion: ____________________

9. Identify the 4-digit Standard Industrial Classification (SIC) code or 2-letter Activity Code that best represents the products produced or services rendered for which your facility is primarily engaged, as defined in the MSGP, and the applicable sector and subsector of your primary industrial activity (See Appendix D):

☐ **Primary SIC Code** **OR** ☐ **Primary Activity Code**

10. Total size of site associated with industrial activity:__________ (to the nearest quarter acre)

11. Have you paved or roofed over a formerly exposed, pervious area in order to qualify for the no exposure exclusion? ☐ YES ☐ NO

If yes, please indicate approximately how much area was paved or roofed over. Completing this question does not disqualify you for the no exposure exclusion. However, your permitting authority may use this information in considering whether stormwater discharges from your site are likely to have an adverse impact on water quality, in which case you could be required to obtain permit coverage.

☐ Less than one (1) acre ☐ One (1) to five (5) acres ☐ More than five (5) acres

E. Exposure Checklist

Are any of the following materials or activities exposed to precipitation, now or in the foreseeable future?

(Please check either "Yes" or "No" in the appropriate box.) **If you answer "Yes" to any of these questions, you are not eligible for the no exposure exclusion.**

	Yes	No
Using, storing or cleaning industrial machinery or equipment, and areas where residuals from using, storing or cleaning industrial machinery or equipment remain and are exposed to stormwater	☐	☐
Materials or residuals on the ground or in stormwater inlets from spills/leaks	☐	☐
Materials or products from past industrial activity	☐	☐
Material handling equipment (except adequately maintained vehicles)	☐	☐
Materials or products during loading/unloading or transporting activities	☐	☐
Materials or products stored outdoors (except final products intended for outside use [e.g., new cars] where exposure to stormwater does not result in the discharge of pollutants)	☐	☐
Materials contained in open, deteriorated or leaking storage drums, barrels, tanks, and similar containers	☐	☐
Materials or products handled/stored on roads or railways owned or maintained by the discharger	☐	☐
Waste material (except waste in covered, non-leaking containers [e.g., dumpsters])	☐	☐
Application or disposal of process wastewater (unless otherwise permitted)	☐	☐
Particulate matter or visible deposits of residuals from roof stacks and/or vents not otherwise regulated (i.e., under an air quality control permit) and evident in the stormwater outflow	☐	☐

F. Certification Information

I certify under penalty of law that I have read and understand the eligibility requirements for claiming a condition of "no exposure" and obtaining an exclusion from NPDES stormwater permitting.

I certify under penalty of law that there are no discharges of stormwater contaminated by exposure to industrial activities or materials from the industrial facility or site identified in this document (except as allowed under 40 CFR 122.26(g)(2)).

I understand that I am obligated to submit a NEC form once every five years to the NPDES permitting authority and, if requested, to the operator of the local municipal separate storm sewer system (MS4) into which the facility discharges (where applicable). I understand that I must allow the NPDES permitting authority, or MS4 operator where the discharge is into the local MS4, to perform inspections to confirm the condition of no exposure and to make such inspection reports publicly available upon request. I understand that I must obtain coverage under an NPDES permit prior to any point source discharge of stormwater from the facility.

Additionally, I certify under penalty of law that this document and all attachments were prepared under my direction or supervision in accordance with a system designed to assure that qualified personnel properly gathered and evaluated the information submitted. Based on my inquiry of the person or persons who manage the system, or those persons directly responsible for gathering the information, the information submitted is to the best of my knowledge and belief true, accurate and complete. I am aware that there are significant penalties for submitting false information, including the possibility of fine and imprisonment for knowing violations.

First Name, Middle, Last Name:

Title:

Signature: ____________________ Date: __ / __ / ____

E-mail:

G. Discontinuation of NEC Information

I certify under penalty of law that this document and all attachments were prepared under my direction or supervision in accordance with a system designed to assure that qualified personnel properly gathered and evaluated the information submitted. Based on my inquiry of the person or persons who manage the system, or those persons directly responsible for gathering the information, the information submitted is to the best of my knowledge and belief true, accurate and complete. I am aware that there are significant penalties for submitting false information, including the possibility of fine and imprisonment for knowing violations.

First Name, Middle, Last Name

Title:

Signature: ____________________ Date: __ / __ / ____

E-mail:

Instructions for Completing EPA Form 3510-11

No Exposure Certification (NEC) for Exclusion from Stormwater Discharges Associated with Industrial Activity Under the NPDES Multi-Sector General Permit

This Form Replaces Form 3510-11 (06/15) OMB No. 2040-0300

Who May File a No Exposure Certification (NEC) Form

Federal law at 40 CFR Part 122.26 prohibits point source discharges of stormwater associated with industrial activity to waters of the U.S. without a National Pollutant Discharge Elimination System (NPDES) permit. However, NPDES permit coverage is not required for discharges of stormwater associated with industrial activities identified at 40 CFR 122.26(b)(14)(i)-(ix) and (xi) if the discharger can certify that a condition of "no exposure" exists at the industrial facility or site.

Stormwater discharges from construction activities identified in 40 CFR 122.26(b)(14)(x) and (b)(15) are not eligible for the no exposure exclusion.

Obtaining and Maintaining the No Exposure Exclusion

This form is used to certify that a condition of no exposure exists at the industrial facility or site described herein. This certification is only applicable in jurisdictions where EPA is the NPDES permitting authority and must be re-submitted at least once every five years.

The industrial facility operator must maintain a condition of no exposure at its facility or site in order for the no exposure exclusion to remain applicable. If conditions change resulting in the exposure of materials and activities to stormwater, the facility operator must obtain coverage under an NPDES stormwater permit immediately.

Completing the Form

You must type or print, using uppercase letters, in appropriate areas only. Enter only one character per space (i.e., between the marks). Abbreviate if necessary to stay within the number of characters allowed for each item. Use one space for breaks between words, but not for punctuation marks unless they are needed to clarify your response. Please submit original document with signature in ink - do not send a photocopied signature. One form must be completed for each facility or site for which you are seeking to certify a condition of no exposure. **Please make sure you have addressed all applicable questions and have made a photocopy for your records before sending the completed form to the above address.**

Section A. Approval to Use Paper NEC Form

You must indicate whether you have been granted a waiver from electronic reporting from the EPA Regional Office. Note that you are not authorized to use this paper NEC form unless the EPA Regional Office has approved its use. Where you have obtained approval to use this form, indicate the waiver that you have been granted, the name of the EPA Regional Office staff person who granted the waiver, and the date that approval was provided. See https://www.epa.gov/npdes/contact-us-stormwater for a list of EPA Regional Office contacts.

Section B. Reason for Submission

You must check your reason for submitting this form. You may submit this form for obtaining a new NEC, for renewing a previous NEC, or for discontinuing an existing NEC (for facilities that no longer need the exclusion from permit coverage for industrial stormwater discharges).

Section C. Facility Operator Information

Provide the legal name of the person, firm, public organization, or any other entity that operates the facility described in this certification form. An operator of a facility is the legal entity that controls the operation of the facility. Refer to Appendix A of the MSGP for the definition of "operator". Provide the operator's mailing address, phone number, and e-mail. Correspondence for the NEC will be sent to this address. Also provide the name and title for the operator point of contact (note that the point of contact name may be the same as the operator name).

Section D. Facility Information

Enter the official or legal name and complete street address, including city, state, ZIP code, and county or similar government subdivision of the facility. If the facility lacks a street address, indicate the general location of the facility (e.g., Intersection of State Highways 61 and 34). Complete facility information must be provided for permit coverage to be granted.

Provide the latitude and longitude of your facility in decimal degrees format. The latitude and longitude of your facility can be determined in several different ways, including through the use of global positioning system (GPS) receivers and U.S. Geological Survey (USGS) topographic or quadrangle maps. Refer to http://transition.fcc.gov/mb/audio/bickel/DDDMMSS-decimal.html/ for assistance in providing the proper latitude/longitude format. For consistency, EPA requests that measurements be taken form the approximate center of the facility. Specify which method you used to determine latitude and longitude. If a USGS topographic map is used, specify the scale of the map used. Enter the horizontal reference datum for your latitude and longitude. The horizontal reference datum used on USGS topographic maps is shown on the bottom left corner of USGS topographic maps; it is also available for GPS receivers.

Indicate whether the facility is on Indian country lands, and if so, provide the name of the Indian tribe associated with the area of Indian country (including name of Indian reservation, if applicable).

Indicate whether you are a "federal operator" as defined in Appendix A of the MSGP. Also check the facility's ownership type.

Indicate whether the facility was previously covered under an NPDES stormwater permit. If so, include the NPDES ID (i.e., NOI tracking number).

List the four-digit Standard Industrial Classification (SIC) code or two character activity code that best describes the primary industrial activities performed by your facility.

Enter the total size of the site associated with industrial activity in acres.

Check "Yes" or "No" as appropriate to indicate whether you have paved or roofed over a formerly exposed, pervious area (i.e., lawn, meadow, dirt or gravel road/parking lot) in order to qualify for no exposure. If yes, also indicate approximately how much area was paved or roofed over and is now impervious area.

Instructions for Completing EPA Form 3510-11

No Exposure Certification (NEC) for Exclusion from Stormwater Discharges Associated with Industrial Activity Under the NPDES Multi-Sector General Permit

This Form Replaces Form 3510-11 (06/15) Form OMB No. 2040-0300

Section E. Exposure Checklist

Check "Yes" or "No" as appropriate to describe the exposure condition at your facility. If you answer "Yes" to **ANY** of the questions in this section, a potential for exposure exists at your site and you cannot certify to a condition of no exposure. You must obtain (or already have) coverage under an NPDES stormwater permit. After obtaining permit coverage, you can institute modifications to eliminate the potential for a discharge of stormwater exposed to industrial activity, and then certify to a condition of no exposure.

Section F and G. Certification and Discontinuation of NEC Information

The NEC form must be signed as follows:

For a corporation: By a responsible corporate officer. For the purpose of this Section, a responsible corporate officer means:

(i) a president, secretary, treasurer, or vice-president of the corporation in charge of a principal business function, or any other person who performs similar policy- or decision-making functions for the corporation, or (ii) the manager of one or more manufacturing, production, or operating facilities, provided, the manager is authorized to make management decisions which govern the operation of the regulated facility including having the explicit or implicit duty of making major capital investment recommendations, and initiating and directing other comprehensive measures to assure long-term environmental compliance with environmental laws and regulations; the manager can ensure that the necessary systems are established or actions taken to gather complete and accurate information for permit application requirements; and where authority to sign documents has been assigned or delegated to the manager in accordance with corporate procedures.

For a partnership or sole proprietorship: By a general partner or the proprietor, respectively; or

For a municipality, state, federal, or other public agency: By either a principal executive officer or ranking elected official. For purposes of this Part, a principal executive officer of a federal agency includes (i) the chief executive officer of the agency, or (ii) a senior executive officer having responsibility for the overall operations of a principal geographic unit of the agency (e.g., Regional Administrator of EPA). Include the name and title of the person signing the form and the date of signing.

Include the name, title, and e-mail address of the person signing the form and the date of signing.

An unsigned or undated NEC form will not be considered valid.

Paperwork Reduction Act Notice

This collection of information is approved by OMB under the Paperwork Reduction Act, 44 U.S.C. 3501 et seq. (OMB Control No. 2040-0300). Responses to this collection of information are mandatory (40 CFR 122.26). An agency may not conduct or sponsor, and a person is not required to respond to, a collection of information unless it displays a currently valid OMB control number. The public reporting and recordkeeping burden for this collection of information is estimated to be 45 minutes per response. Send comments on the Agency's need for this information, the accuracy of the provided burden estimates and any suggested methods for minimizing respondent burden to the Regulatory Support Division Director, U.S. Environmental Protection Agency (2821T), 1200 Pennsylvania Ave., NW, Washington, D.C. 20460. Include the OMB control number in any correspondence. Do not send the completed form to this address.

Submitting Your Form

If you have been granted a waiver from your Regional Office to submit a paper NEC form, you must send your NEC form by mail to one of the following addresses:

For Regular U.S. Mail Delivery:

Stormwater Notice Processing Center
Mail Code 4203M, ATTN: MSGP No Exposure
U.S. EPA
1200 Pennsylvania Avenue, NW
Washington, DC 20460

For Overnight/Express Mail Delivery:
Stormwater Notice Processing Center
William Jefferson Clinton East Building - Room 7420
ATTN: MSGP No Exposure
U.S. EPA
1201 Constitution Avenue, NW
Washington, DC 20004

Visit this website for instructions on how to submit electronically: https://www.epa.gov/npdes/stormwater-discharges-industrial-activities

Appendix L - List of Tier 3, Tier 2, and Tier 2.5 Waters

EPA's MSGP has special requirements for discharges to waters designated by a state or tribe as Tier 2/2.5 or Tier 3 for antidegradation purposes under 40 CFR 131.12(a). See Parts 1.1.6.2 and 1.1.7.

The list below is provided as a resource for operators who must determine whether they discharge to a Tier 2/2.5 or Tier 3 water. Only Tier 2/2.5 or Tier 3 waters specifically identified by a water quality standard authority (e.g., a state, territory, or tribe) are identified in the table below. Many authorities evaluate the existing and protected quality of the receiving water on a pollutant-by-pollutant basis and determine whether water quality is better than the applicable criteria that would be affected by a new discharger or a new source or an increase in an existing discharge of the pollutant. In instances where water quality is better, the authority may choose to allow lower water quality, where lower water quality is determined to be necessary to support important social and economic development. Permittees are not required to identify those waters which are evaluated on an individual basis.

Permit Number	**Areas of Coverage/Where EPA Is Permitting Authority**	
MAR050000	**Commonwealth of Massachusetts, except Indian Country lands**	
	Tier 2, Tier 2.5, and 3 waters are identified and listed in the Massachusetts Water Quality Standards 314 CMR 4.00. Surface water qualifiers that correspond with Tier classifications are defined at 314 CMR 4.06(1)(d) and listed in tables and figures at the end of 314 CMR 4.06. See MassDEP's web page at: https://www.mass.gov/doc/314-cmr-400-surface-water-quality-standards/download.	
	Tier 2	Listed as "High Quality Waters", and all wetlands that are not designated as an Outstanding Resource Water
	Tier 2.5	Listed as "Outstanding Resource Water", "Public Water Supply", "Tributary to Public Water Supply", all wetlands bordering Outstanding Resource Waters, and vernal pools
	Tier 3	Defined as "Special Resource Water". Note: No waters have been defined as a Special Resource Water as of the issuance of this permit.

Permit Number	**Areas of Coverage/Where EPA Is Permitting Authority**	
NHR050000	**State of New Hampshire**	
	Tier 2	All waters are Tier 2 except where listed as impaired for the most current approved assessment cycle. GIS maps are available in cycle specific Surface Water Quality Viewer at:https://nhdes.maps.arcgis.com/apps/webappviewer/index.html?id=aa5a11f8b8c341058fc031701a2fb3c9 and, using the NHDES Assessment Unit ID assigned to the waterbody, referencing the appropriate Watershed Report Card (based on the 305(b)/303(d) Assessment). Waterbodies included in Categories "4A-*" or "5-*" are impaired and therefore not designated as Tier 2 waters. The assessment status of waterbodies is also included in the biennial 303(d) Lists available in spreadsheet and PDF format at: https://www.des.nh.gov/resource-center/publications?keys=303%28d%29+List&purpose=&subcategory=Watershed+Management. As of Effective Date of this Permit, the following assessment cycles are approved for the waterbodies indicated (however, operators must check for any more recently approved cycles at the time of filing an NOI; i.e., the 2020 303(d) List will apply to all waterbodies once approved): For discharges into the following waters, reference the 2012 305(b)/303(d) List: Little Bay, Bellamy River, Upper Piscataqua River, Portsmouth Harbor, Little Harbor/Back Channel and Great Bay assessment zones; and the Upper Portsmouth Harbor, Great Bay Prohib SZ2, and Great Bay-Cond Appr assessment units. For discharges into all other waters, reference the 2018 303(d) List available at: https://www.des.nh.gov/resource-center/publications?keys=2018+status&purpose=&subcategory=Watershed+Management Waterbodies not identified on the list or map are Tier 2. There is no list of Tier 2 or 2.5 waters in New Hampshire. New dischargers and new sources should contact David J. Gray (EPA Region 1's MSGP coordinator at gray.davidj@epa.gov).
	Tier 2.5	There is no list of Tier 2 or 2.5 waters in New Hampshire. New dischargers and new sources should contact David J. Gray (EPA Region 1's MSGP coordinator at gray.davidj@epa.gov).

Permit Number	Areas of Coverage/Where EPA Is Permitting Authority	
	Tier 3	Listed as an Outstanding Resource Water (ORW). Env-Ws 1708.04(a) describes that surface waters of national forests and surface waters designated as "natural" under RSA 483:7-a, I shall be considered outstanding resource waters (ORW). A list of ORWs/Tier 3 waters is available at: https://www.des.nh.gov/resource-center/publications?keys=cgp&purpose=&subcategory=Watershed+Management. If so indicated on this list, review the NHDES OneStop Data Mapper at: https://www4.des.state.nh.us/onestopdatamapper/onestopmapper.aspx. Waterbodies not identified on the list or map are not ORWs. Env-Wq 1708.04(a) Surface waters of national forests and surface waters designated as "natural" under RSA 483:7-a, shall be considered outstanding resource waters (ORW). The New Hampshire waters listed as ORW can be found along with a list of impaired waters at https://www.des.nh.gov/organization/divisions/water/stormwater/documents/impaired-tmdl-orw-listcgp-msgp.xlsx. New dischargers and new sources should contact David J. Gray (EPA Region 1's MSGP coordinator at gray.davidj@epa.gov).
PRR050000	**Commonwealth of Puerto Rico**	
	Tier 3	Tier III waters are those which are classified as either Class SA or Class SE. Class SA waters are defined as "Coastal waters and estuarine waters of high quality and/or exceptional ecological or recreational value whose existing characteristics shall not be altered, except by natural causes, in order to preserve the existing natural phenomena." Class SA waters include bioluminescent lagoons and bays such as La Parguera and Monsio José on the Southern Coast, Bahía de Mosquito in Vieques, and any other coastal or estuarine waters of exceptional quality of high ecological value or recreational which may be designated by Puerto Rico, through Resolution, as requiring this classification for protection of the waters. Class SE waters are defined as "Surface waters and wetlands of exceptional ecological value, whose existing characteristics should not be altered in order to preserve the existing natural phenomena." Class SE waters include Laguna Tortuguero, Laguna Cartagena and any other surface water bodies of exceptional ecological value as may be designated by Puerto Rico through Resolution.
DCR050000	**District of Columbia**	
	Tier 2/2.5	Rule 1102.4 SPECIAL WATERS OF THE DISTRICT OF COLUMBIA (SWDC): Any segment or segments of the surface waters of the District that are of water quality better than needed for the current use or have scenic or aesthetic importance shall be designated as Special Waters of the District of Columbia (SWDC). Rock Creek and its tributaries and Battery Kemble Creek and its tributaries are considered Special Waters of the District of Columbia (SWDC) under its antidegradation program.
MNR05000I	**Fond du Lac Band of MN Chippewa**	
	Tier 3	Six lakes are presently identified as Tier 3: (1) Dead Fish, (2) Jaskari, (3) Miller (Mud), (4) Perch, (5) Rice Portage, (6) Wild Rice.

Permit Number	Areas of Coverage/Where EPA Is Permitting Authority	
	Grand Portage Band of MN Chippewa	
	Tier 2/2.5	All waters, not already classified as Tier 3, are high quality Tier 2 waters. (see Grand Portage Reservation Water Quality Standards, Section VI & VII, Pages 14-16).
	Tier 3	“The portion of Lake Superior north of latitude 47 degrees, 57 minutes, 13 seconds, east of Hat Point, south of the Minnesota-Ontario boundary, and west of the Minnesota-Michigan boundary.” (see Section VII, Page 16).
WIR05000I	**Lac du Flambeau Band of the Lake Superior Chippewa**	
	Tier 2	All named waters, including wetlands, not specified under an antidegradation classification.
	Tier 2.5	Bills Lake, Birch Lake, Bobidosh Lake, Bog Lake (SE SE Sec. 31, T40NR6E), Bolton Lake, Broken Bow Lake, Chewalah Lake, Clear Lake (Sec. 2, T39NR4E), Corn Great, Great, Corn Lake, Little "Least/Lesser", Crawling Stone Lake, Big, Crawling Stone Lake, Little, Crescent Lake, Crooked Lake, Big, David Lake, Ellerson Lake, Middle, Ellerson Lake, West, Elsie Lake "Boundary Lake", Fat Lake, Fence Lake, Gresham Creek, Green Lake (NW NW Sec. 19, T41R6E), Grey Lake, Gunlock Lake, Haskell Lake, Headflyer Lake (Sec. 19, T41NR5E), Highway Lake (NW NW Sec. 19, T41NR5E), Horsehead Lake (SE SW Sec. 9, T40NR5E), Hutton's Creek, Ike Walton Lake, Lily Lake (SE SW Sec. 35, T40NR5E), Little Ten Lake, Lodge Lake "L. Rice" (NW NW Sec. 8, T41NR6E), Lucy Lake, Mindys Lake (Sec. 8, T40NR5E), Minette Lake, Mitten Lake, Monk's Lake (Sec. 13, T40NR5E), Moving Cloud Lake, Mud Creek, Muskesin Lake, Patterson Lake, Placid Twin Lake (North), Placid Twin Lake (South), Plummer Lake, Poupart Lake, Prairie Lake (NE SW Sec. 13, T40NR4E), Raven Lake, Ross Allen Lake, Sand Lake, Little, Scott Lake (Sec. 22, T40N, R4E), Shishebogama Lake, Signal Lake, Snort Lake (Sec. 5, T41N, R6E), Spring Lake "Jerms", Squirrel Lake, Statenaker Lake "Hollow", Stearns Lake "Hourglass", Sugarbush "Hidden Lake" (NW NW Sec. 17, T41NR5E), Sugarbush Creek, Sugarbush Lake, Little, Sugarbush Lake, Lower, Sugarbush Lake, Middle, Sugarbush Lake, Upper, Sunfish Lake, Tippecanoe Lake, Tomahawk River, To-To Tom Lake, Toulish Lake, Trout River, Warrior Lake, White Sand Lake, Whitefish Lake "Cattail Lake" (Sec. 34, T40N5R), Wishow Lake, Wyandock Lake
	Tier 3	Bear River (1st bridge to Reservation boundary), Big Springs (Sec. 25, T40NR4E), Black Lake, Cranberry Lake, Doud Lake, Eagle Lake, Gene Lake, Johnson Springs, Little Trout Lake, Lost Lake (Sect. 1, T41NR4E), Mishonagon Creek, Munnomin (Jesse, Duck) Lake, Negani (Hegani) Lake, Reservation Line Lake, Spring Creek, Tank Lake, Thomas Lake, Wild Rice Lake, Zee Lake
	Mole Lake Band of the Lake Superior Tribe of the Chippewa Indians, Sokaogon Chippewa Community	
	Tier 2.9	One Tribal Water, Wetland 22, is classified as Exceptional High Quality Water (EHQW). It is a high-quality water body of significant cultural, religious, social, ecological and recreational attributes.
	Tier 3	All waters in the Sokaogon Chippewa Community (WI) as classified as Tier 3, with one exception (Wetland 22).

Permit Number	Areas of Coverage/Where EPA Is Permitting Authority	
COR0500I	**State of Colorado**	
	Ute Mountain Ute Tribe	
	Tier 3	(2010 Proposed) Designations: (1) Ute Spring and unnamed creek from Ute Spring downstream within Section 12, TWP35N R18W (Colorado). (2) Allen Canyon Creek, Sections 17, 20, 29, 30, 31, TWP 35S, R21E (Utah) (3) “Lopez” Spring and unnamed creek tributary to and downstream from the spring, within Section 35, TWP 34N, R18W
NMR050000	**State of New Mexico**	
	Tier 3	(1) Rio Santa Barbara, including the west, middle and east forks from their headwaters downstream to the boundary of the Pecos Wilderness; and (2) the waters within the United States forest service Valle Vidal special management unit including: (a) Rio Costilla, including Comanche, La Cueva, Fernandez, Chuckwagon, Little Costilla, Holman, Gold, Grassy, LaBelle and Vidal creeks, from their headwaters downstream to the boundary of the United States forest service Valle Vidal special management unit; (b) Middle Ponil creek, including the waters of Greenwood Canyon, from their headwaters downstream to the boundary of the Elliott S. Barker wildlife management area; (c) Shuree lakes; (d) North Ponil creek, including McCrystal and Seally Canyon creeks, from their headwaters downstream to the boundary of the United States forest service Valle Vidal special management unit; and (e) Leandro creek from its headwaters downstream to the boundary of the United States forest service Valle Vidal special management unit. (3) the named perennial surface waters of the state, identified in Subparagraph (a) below, located within United States department of agriculture forest service wilderness. Wilderness are those lands designated by the United States congress as wilderness pursuant to the Wilderness Act. Wilderness areas included in this designation are the Aldo Leopold wilderness, Apache Kid wilderness, Blue Range wilderness, Chama River Canyon wilderness, Cruces Basin wilderness, Dome wilderness, Gila wilderness, Latir Peak wilderness, Pecos wilderness, San Pedro Parks wilderness, Wheeler Peak wilderness, and White Mountain wilderness. (a) The following waters are designated in the Rio Grande basin: (i) in the Aldo Leopold wilderness: Byers Run, Circle Seven creek, Flower canyon, Holden Prong, Indian canyon, Las Animas creek, Mud Spring canyon, North Fork Palomas creek, North Seco creek, Pretty canyon, Sids Prong, South Animas canyon, Victorio Park canyon, Water canyon; (ii) in the Apache Kid wilderness Indian creek and Smith canyon; (iii) in the Chama River Canyon wilderness: Chavez canyon, Ojitos canyon, Rio Chama; (iv) in the Cruces Basin wilderness: Beaver creek, Cruces creek, Diablo creek, Escondido creek, Lobo creek, Osha creek; (v) in the Dome wilderness: Capulin creek, Medio creek, Sanchez canyon/creek; (vi) in the Latir Peak wilderness: Bull creek, Bull Creek lake, Heart lake,

Permit Number	Areas of Coverage/Where EPA Is Permitting Authority	
		Lagunitas Fork, Lake Fork creek, Rito del Medio, Rito Primero, West Latir creek; (vii) in the Pecos wilderness: Agua Sarca, Hidden lake, Horseshoe lake (Alamitos), Jose Vigil lake, Nambe lake, Nat lake IV, No Fish lake, North Fork Rio Quemado, Rinconada, Rio Capulin, Rio de las Trampas (Trampas creek), Rio de Truchas, Rio Frijoles, Rio Medio, Rio Molino, Rio Nambe, Rio San Leonardo, Rito con Agua, Rito Gallina, Rito Jaroso, Rito Quemado, San Leonardo lake, Santa Fe lake, Santa Fe river, Serpent lake, South Fork Rio Quemado, Trampas lake (East), Trampas lake (West); iii) in the San Pedro Parks wilderness: Agua Sarca, Cañon Madera, Cave creek, Cecilia Canyon creek, Clear creek (North SPP), Clear creek (South SPP), Corralitos creek, Dove creek, Jose Miguel creek, La Jara creek, Oso creek, Rio Capulin, Rio de las Vacas, Rio Gallina, Rio Puerco de Chama, Rito Anastacio East, Rito Anastacio West, Rito de las Palomas, Rito de las Perchas, Rito de los Pinos, Rito de los Utes, Rito Leche, Rito Redondo, Rito Resumidero, San Gregorio lake; (ix) in the Wheeler Peak wilderness: Black Copper canyon, East Fork Red river, Elk lake, Horseshoe lake, Lost lake, Sawmill creek, South Fork lake, South Fork Rio Hondo, Williams lake. (b) The following waters are designated in the Pecos River basin: (i) in the Pecos wilderness: Albright creek, Bear creek, Beatty creek, Beaver creek, Carpenter creek, Cascade canyon, Cave creek, El Porvenir creek, Hollinger creek, Holy Ghost creek, Horsethief creek, Jack's creek, Jarosa canyon/creek, Johnson lake, Lake Katherine, Lost Bear lake, Noisy brook, Panchuela creek, Pecos Baldy lake, Pecos river, Rio Mora, Rio Valdez, Rito Azul, Rito de los Chimayosos, Rito de los Esteros, Rito del Oso, Rito del Padre, Rito las Trampas, Rito Maestas, Rito Oscuro, Rito Perro, Rito Sebadilloses, South Fork Bear creek, South Fork Rito Azul, Spirit lake, Stewart lake, Truchas lake (North), Truchas lake (South), Winsor creek; (ii) in the White Mountain wilderness: Argentina creek, Aspen creek, Bonito creek, Little Bonito creek, Mills canyon/creek, Rodamaker creek, South Fork Rio Bonito, Turkey canyon/creek. (c) The following waters are designated in the Gila River basin: (i) in the Aldo Leopold wilderness: Aspen canyon, Black Canyon creek, Bonner canyon, Burnt canyon, Diamond creek, Falls canyon, Fisherman canyon, Running Water canyon, South Diamond creek; (ii) in the Gila wilderness: Apache creek, Black Canyon creek, Brush canyon, Canyon creek, Chicken Coop canyon, Clear creek, Cooper canyon, Cow creek, Cub creek, Diamond creek, East Fork Gila river, Gila river, Gilita creek, Indian creek, Iron creek, Langstroth canyon, Lilley canyon, Little creek, Little Turkey creek, Lookout canyon, McKenna creek, Middle Fork Gila river, Miller Spring canyon, Mogollon creek, Panther canyon, Prior creek, Rain creek, Raw Meat creek, Rocky canyon, Sacaton creek, Sapillo creek, Sheep Corral canyon, Skeleton canyon, Squaw creek, Sycamore canyon, Trail canyon, Trail creek, Trout creek, Turkey creek, Turkey Feather creek, Turnbo canyon, West Fork Gila river, West Fork Mogollon creek, White creek, Willow creek, Woodrow canyon. (d) The following waters are designated in the Canadian River basin: in the Pecos wilderness Daily creek, Johns canyon, Middle Fork Lake of Rio de la Casa, Middle Fork Rio de la Casa, North Fork Lake of Rio de la Casa, Rito de Gascon, Rito San Jose, Sapello river, South Fork Rio de la

Permit Number	Areas of Coverage/Where EPA Is Permitting Authority	
		Casa, Sparks creek (Manuelitas creek). (e) The following waters are designated in the San Francisco River basin: (i) in the Blue Range wilderness: Pueblo creek; in the Gila wilderness: Big Dry creek, Lipsey canyon, Little Dry creek, Little Whitewater creek, South Fork Whitewater creek, Spider creek, Spruce creek, Whitewater creek. (f) The following waters are designated in the Mimbres Closed basin: in the Aldo Leopold wilderness Corral canyon, Mimbres river, North Fork Mimbres river, South Fork Mimbres river. (g) The following waters are designated in the Tularosa Closed basin: in the White Mountain wilderness Indian creek, Nogal Arroyo, Three Rivers. (h) The wetlands designated are identified on the maps and list of wetlands within United States forest service wilderness areas designated as outstanding national resource waters published at the New Mexico state library and available on the department's website.
CAR05000I	**Hualapai Tribe**	
	Tier 3	Spencer, Meriwhitica, Willow Spring, Upper Milkweed Spring, Bridge Canyon, Travertine Spring, Travertine Falls, Diamond Creek, Diamond Creek Spring, Blue Mountain, Metuck, Peach Springs Spring, Westwater, Clay Tank, Hockey Puck, Pocamote Spring, Mohawk Spring, Granite Spring, Three Spring, Warm Spring, Honga Spring, National Canyon Spring, National Canyon, Moss Spring
	White Mountain Apache Tripe of the Fort Apache Indian Reservation	
	Tier 2/2.5	East Fork White River, above R52 Road, East Fork White River below R52 Road, above Rock Cr., Paradise Creek, above Wohlenberg, Ord Creek, Smith Cienega, Bull Cienega, Smith Creek, Big Bonito , Tonto Creek, below Y47 Crossing, Crooked Creek, Boggy Creek, Lofer Cienego Creek, Little Bonito Creek, above Y55 Crossing, Flash Creek, Squaw Creek, Hurricane Lake, Hurricane Creek, Hughey Creek, Bonito Cienega, West Fork Black River, Hall Cienega, Purcell Cienega, Thompson Creek, Carrizo Creek below Corduroy, Carrizo Creek above Corduroy, Cedar Creek, Big Canyon (E. Cedar Creek), Middle Cedar Creek, West Cedar Creek, Cibecue Creek in Box Canyon to Salt river, Cibecue Creek, Box CallYon up to confluence with Salt Creek, Spring Creek, Salt Creek, Cibecue Creek, from confluence w/Salt Cr, to Big Springs, Cibecue Creek, above Big Springs, Rock Springs Creek, Salt Draw, Canyon Creek S. of Chediski Farms, Willow Creek (Lower Canyon Cr), Oak Creek, Canyon Creek. N. of Chedlski Fanns,
	Tier 3	East Fork While River, in Wilderness Area, Pumpkin Lake
IDR050000	**State of Idaho**	
	For Tier 2 and Tier 3 waters, please consult the Idaho Integrated Report, available at: http://www.deq.idaho.gov/water-quality/surface-water/monitoring-assessment/integrated-report.aspx and the closest regional office of the Idaho Department of Environmental Quality: http://www.deq.idaho.gov/regional-offices-issues.aspx.	

Appendix M - Discharge Monitoring Report (DMR) Form

Part 7.2 requires you to use the electronic DMR system to prepare and submit your Discharge Monitoring Report (DMR) form. However, if you are given approval by the EPA Regional Office to use a paper DMR form, and you elect to use it, you must complete and submit the following form.

NPDES FORM 6100-29	**UNITED STATES ENVIRONMENTAL PROTECTION AGENCY** **WASHINGTON, DC 20460** **MSGP INDUSTRIAL DISCHARGE MONITORING REPORT (DMR) FORM**	OMB No. 2040-0300 OMB Approval Pending

A. Approval to Use Paper NOI Form

1. Have you been granted a waiver from electronic reporting from the EPA Regional Office*? ☐ YES ☐ NO

If yes, check which waiver you have been granted, the name of the EPA Regional Office staff person who granted the waiver, and the date of approval:

Waiver granted:

☐ The owner/operator’s headquarters is physically located in a geographic area (i.e., ZIP code or census tract) that is identified as under-served for broadband Internet access in the most recent report from the Federal Communications Commission.

☐ The owner/operator has issues regarding available computer access or computer capability

Name of EPA staff person that granted the waiver:

Date approval obtained: / /

*** Note: Note: You are required to obtain approval from the applicable EPA Regional Office prior to using this paper DMR form. If you have not obtained a waiver, you must file this form electronically using the NetDMR at http://www.epa.gov/netdmr/**

B. Permit Information

1. NPDES ID:

2. Reason(s) for Submission (Check all that apply):

☐ Submitting monitoring data (Fill in all Sections).

☐ Reporting no discharge for all discharge points for this monitoring period (Fill in Sections A, B, C, D, E.1, and G).

☐ Reporting that your site status has changed to inactive and unstaffed and there are no industrial materials or activities exposed to stormwater (Fill in Sections A, B, C, D, and F.4 (include date of status change in comment field).

☐ Reporting that your site status has changed to active and/or there are industrial materials or activities exposed to stormwater (Fill in all Sections and include date of status change in comment field in Section F.4).

C. Facility Operator Information

1. Operator Information:

Operator Name:

Mailing Address:

Street:

City: State: ZIP Code: -

Phone: - - Ext.

E-mail:

2. DMR Preparer (Complete if DMR was prepared by someone otherthan the certifier):

First Name, Middle Initial, Last Name

Organization:

Phone: - - Ext.

E-mail:

D. Facility Information

1. Facility Name:

2, Facility Address:

Street/Location:

City: State: ZIP Code: -

County or Similar Government Subdivision:

E. Discharge Information

1. Identify monitoring period:

☐ Check here if proposing alternative monitoring periods due to irregular stormwater runoff. Identify alternative monitoring schedule and indicate for which alternative monitoring period you are reporting monitoring data:

☐ Quarter 1 (January 1 – March 31)	☐ Quarter 1:	From	/	To	/	
☐ Quarter 2 (April 1 – June 30)	☐ Quarter 2:	From	/	To	/	
☐ Quarter 3 (July 1 – September 30)	☐ Quarter 3:	From	/	To	/	
☐ Quarter 4 (October 1 – December 31)	☐ Quarter 4:	From	/	To	/	

2. Are you required to monitor for cadmium, chromium, lead, nickel, silver, or zinc in freshwater? ☐ YES (Skip to 3) ☐ NO (Skip to 4)

3. What is the hardness level of the receiving water? (mg/L)

4. Does your facility discharge into any saltwater receiving waters? ☐YES ☐NO

UNITED STATES ENVIRONMENTAL PROTECTION AGENCY WASHINGTON, DC 20460
MSGP INDUSTRIAL DISCHARGE MONITORING REPORT (DMR) FORM

OMB No. 2040-0300

F. Monitoring Information

Note: Make additional copies of this form as necessary.

1. Nature of Discharge: ☐ Rainfall (Complete line items 2.a., 2.b., & 2.c.) ☐ Snowmelt

2.a. Duration of the rainfall event (hours): __ __ 2.b. Rainfall amount (inches): __ __ . __ 2.c. Time since previous measurable storm event (days): __ __ __

3.a. Discharge Point ID (list the same 3-digit discharge points identified on the NOI form	**3.b. Check if Any Discharge Points are Substantially Identical to Other Discharge Points Listed**	**3.c. Check if No Discharge**	**3.d. Monitoring Type IM, BM, ELG, S/T, I, O***	**3.e. Parameter**	**3.f. Quantity or Concentration**	**3.g. Units**	**3.h. Results Description**	**3.i. Collection Date**	**3.j. Exceedance solely attributable to natural background pollutant levels per Part 5.2.6.1**	**3.k. Exceedance due to run-on per Part 5.2.6.2**	**3.l Exceedance due to an abnormal event per 5.2.6.3**	**3.m Exceedance but discharge does not result in any exceedance of water quality standards per Part 5.2.6.5**	**3.n Aluminum Exceedance demonstrated to not result in an exceedance of your facility-specific criteria per Part 5.2.6.4.a**	**3.o Copper Exceedance demonstrated to not result in an exceedance of your facility-specific criteria per Part 5.2.6.4.b**
	☐ Substantially identical to discharge point: ______	☐									☐	☐	☐	☐
	☐ Substantially identical to discharge point: ______	☐									☐	☐	☐	☐
	☐ Substantially identical to discharge point: ______	☐									☐	☐	☐	☐
	☐ Substantially identical to discharge point: ______	☐									☐	☐	☐	☐

* IM - Indicator monitoring; BM - Benchmark monitoring; (ELG) - Annual effluent limitations guidelines monitoring; (S/T) - State- or tribal-specific monitoring; (I) - Impaired waters monitoring; (O) - Other monitoring as required by EPA

4. Comment and/or Explanation of Any Violations (Reference all attachments here)

G. Certification

I certify under penalty of law that this document and all attachments were prepared under my direction or supervision in accordance with a system designed to assure that qualified personnel properly gathered and evaluated the information submitted. Based on my inquiry of the person or persons who manage the system, or those persons directly responsible for gathering the information, the information submitted is, to the best of my knowledge and belief, true, accurate, and complete. I am aware that there are significant penalties for submitting false information, including the possibility of fine and imprisonment for knowing violations.

First Name, Middle, Last Name

Title:

Signature:

Date: / /

E-mail:

Instructions for Completing EPA Form 6100-29

Discharge Monitoring Report (DMR) for Stormwater Discharges Associated with Industrial Activity Under the NPDES Multi-Sector General Permit

OMB No. 2040-0300

Who Must Submit A Discharge Monitoring Report to EPA?

Facilities covered under EPA's NPDES Stormwater Multi-Sector General Permit (MSGP or permit) that are required to monitor pursuant to Parts 4.2 and 8 of the permit must submit Discharge Monitoring Reports (DMRs) consistent with the reporting requirements specified in Part 7.1 of the permit.

Completing the Form

Obtain and read a copy of the 2021 MSGP, viewable at https://www.epa.gov/npdes/stormwater-discharges-industrial-activities To complete this form, type or print, using uppercase letters, in the appropriate areas only. Please place each character between the marks. Abbreviate if necessary to stay within the number of characters allowed for each item. Use only one space for breaks between words, but not for punctuation marks unless they are needed to clarify your response. Please submit original document with signature in ink - do not send a photocopied signature. **Photocopy your DMR form for your records before you send the completed original form to the appropriate address.**

Section A. Approval to Use Paper DMR Form

You must indicate whether you have been granted a waiver from electronic reporting from the EPA Regional Office. Note that you are not authorized to use this paper DMR form unless the EPA Regional Office has approved its use. Where you have obtained approval to use this form, indicate the waiver that you have been granted, the name of the EPA staff person who granted the waiver, and the date that approval was provided. See https://www.epa.gov/npdes/contact-us-stormwater for a list of EPA Regional Office contacts.

Section B. Permit Information

Provide the NPDES ID (i.e., NOI tracking number) assigned to the facility for which this DMR is being submitted.

Indicate your reason(s) for submitting this DMR by checking all boxes that apply. The reasons for submission are defined as follows:

- *Submitting monitoring data*: For each storm sampled, submit one DMR form with data for all discharge points sampled. Select this reason even if you only have monitoring data for some of your discharge points (i.e., some discharge points did not discharge). If you select this reason you are required to complete all Sections of the form.
- *Reporting no discharge for all discharge points for this monitoring period*: Indicates that there were no discharges from all discharge points during this monitoring period. If you select this reason you are only required to complete Sections A, B, C, D, E.1, and G.
- *Reporting that your site status has changed to inactive and unstaffed* and there are no industrial materials or activities exposed to stormwater: Indicates that your facility is currently inactive and unstaffed and there are no industrial materials or activities exposed to stormwater (See Part 4.2.1.3 of the permit for more information). If you select this reason you are only required to complete Sections A, B, C, D, and F.4 (include date of status change in comment field).
- *Reporting that your site status has changed from inactive to active* and/or there are industrial materials or activities exposed to stormwater: Indicates that your facility is currently active (See Part 4.2.1.3 of the permit for more information). If you select this reason you are required to complete all Sections of the form and include date of status change in the comment field in Section F.4.

Section C. Facility Operator Information.

Provide the legal name of the person, firm, public organization, or any other entity that operates the facility for which this DMR is being submitted. An operator of a facility is the legal entity that controls the operation of the facility. Refer to Appendix A of the permit for the definition of "operator". Provide the operator's mailing address, phone number, and e-mail. The operator information in this Section should match the operator information provided on your NOI form.

Provide the name, organization, phone number, an e-mail address for the person who prepared this DMR form.

Section D. Facility Information

Enter the official or legal name and complete street address, including city, state, ZIP code, and county or similar government subdivision of the facility. If the facility lacks a street address, indicate the general location of the facility (e.g., Intersection of State Highways 61 and 34). Complete facility information must be provided for permit coverage to be granted. The facility information in this Section should match the facility information provided on your NOI form.

Section E. Discharge Information.

Indicate the appropriate monitoring period (Quarter 1, 2, 3, or 4) covered by the DMR. "Alternative" monitoring periods can apply to facilities located in arid and semi-arid climates, or in areas subject to snow or prolonged freezing. To use alternative monitoring periods, you must provide a revised monitoring schedule here. If using alternative monitoring periods, identify the first day of the monitoring period through the last day of the monitoring period for each of the four periods. The dates should be displayed as month (Mo) / day (Day). See Parts 4.1.6 and 4.1.7 of the permit for more information.

If you are submitting benchmark monitoring data, identify if your facility is required to collect benchmark samples for one or more hardness-dependent metals (i.e., cadmium, lead, nickel, silver, and zinc). If you select "yes" to this question provide the hardness level of the receiving water (in mg/L)). If you select "no" to this question, you must identify if your facility discharges into any saltwater receiving waters.

Instructions for Completing EPA Form 6100-29

Discharge Monitoring Report (DMR) for Stormwater Discharges Associated with Industrial Activity Under the NPDES Multi-Sector General Permit

OMB No. 2040-0300

Section F. Monitoring Information

For the reported monitoring event indicate whether the discharge was from a rainfall or snowmelt event. If you select "rainfall" then indicate the duration (in hours) of the rainfall event, rainfall total (in inches) for that rainfall event, and time (in days) since the previous measurable storm event in line items 2.a-c. For both rainfall and snowmelt monitoring, you must identify the date of collection for the monitoring event in column 3.i. of the table. If the discharge occurs during a period of both rainfall and snowmelt, check both the rainfall and snowmelt boxes and report the appropriate rainfall information in item 2.a-c. To report multiple monitoring events in the same reporting period, copy this form and enter each monitoring event separately with data for all discharge points sampled.

Identify all the discharge points from your facility that discharge stormwater. Each discharge point must be assigned a unique 3-digit number (e.g., 001, 002, 003), and should match the discharge points identified on your NOI form.

If any discharge points are substantially identical, check the box in 3.b and identify the discharge point that the discharge point in 3.a is substantially identical to. In 3.d – k, you only need to provide benchmark monitoring data for one of the discharge points if it is substantially identical.

For any discharge point for which there was no discharge during the monitoring period, check the box in 3.c.

In 3.d, identify the type of monitoring using the specified codes, in parentheses, below:

- (IM) – Indicator monitoring
- (BM) – Benchmark monitoring
- (ELG) – Annual effluent limitations guidelines monitoring;
- (S/T) – State- or Tribal-specific monitoring;
- (I) – Impaired waters monitoring; or
- (O) – Other monitoring as required by EPA.

In 3.e, enter each "parameter" (or "pollutant") monitored. For BM and ELG monitoring, use the same parameter name as in Part 8 of the permit.

In 3.f., enter a sample measurement value for each parameter analyzed and required to be reported. Enter "ND" (i.e., not detected) for any sample results below the method detection limit or "BQL" (i.e., below quantitation limit) for sample results above the detection limit but below the quantitation limit.

In 3.g., enter the units for sample measurement values (i.e., "mg/L" for milligrams per liter) for each parameter analyzed and required to be reported. For monitoring results reported as ND or BQL this space will be left blank and the units will be reported in Column 3.f.

3.h. must be completed for any monitoring results reported as ND or BQL in the "Quality or Concentration" column. For ND, report the laboratory detection level and units in this column. For BQL, report the laboratory quantitation limit and units in this column.

In 3.i. identify the sampling date for each parameter monitoring result reported on this form.

3.j. *Exceedance solely attributable to natural background pollutant levels:* Check box if following the first 4 quarters of benchmark monitoring (or sooner if the exceedance is triggered by less than 4 quarters of data) you have determined that the exceedance of the benchmark is attributable solely to the presence of that pollutant in the natural background for that discharge point and any substantially identical discharge points, or for impaired waters monitoring, the presence of the pollutant is caused solely by natural background, provided that all of the conditions in Part 5.2.6.1 are met.

3.k *Exceedance due to run-on:* Check box if you can demonstrate and obtain EPA agreement that run-on from a neighboring source (e.g., a source external to your facility) is the cause of the exceedance, provided that the conditions in Part 5.2.6.2 are met.

3.l. *Exceedance due to an abnormal event:* Check box if one single sampling event is abnormal and you have immediately documented per Part 5.3 that the single event was abnormal and met all other conditions in Part 5.2.6.3.

3.m. *Exceedance but discharge does not result in any exceedance of water quality standards per Part 5.2.6.5: Check box if you can* demonstrate through an analysis that an exceedance triggering AIM requirements does not result in any exceedance of applicable water quality standards, *provided that all the conditions in Part 5.2.6.5 are met.*

3.n *Aluminum exceedance demonstrated to not result in an exceedance of your facility-specific criteria per Part 5.2.6.4.a:* Check box if you can demonstrate through an analysis that an aluminum exceedance does not result in an exceedance of your facility-specific criteria using the national recommended water quality criteria in-lieu of the applicable MSGP benchmark threshold.

3.o *Copper exceedance demonstrated to not result in an exceedance of your facility-specific criteria per Part 5.2.6.4.b:* Check box if you can demonstrate through an analysis that a copper exceedance does not result in an exceedance of your facility-specific criteria using the national recommended water quality criteria in-lieu of the applicable MSGP benchmark threshold.

Where violations of the permit requirements are reported, include a brief explanation to describe the cause and corrective actions taken, and reference each violation by date. Also, this section should include any additional comments such as are required when changing site status from inactive and unstaffed to active or vice versa. Attach additional pages if you need more space.

Attach additional copies of Section F as necessary to address all discharge points and parameters.

Section G. Certification Information

DMRs must be signed by a person described below, or by a duly authorized representative of that person.

For a corporation: By a responsible corporate officer. For the purpose of this Section, a responsible corporate officer means:

(i) a president, secretary, treasurer, or vice-president of the corporation in charge of a principal business function, or any other person who performs similar policy- or decision-making functions for the corporation, or (ii) the manager of one or more manufacturing, production, or operating facilities, provided, the manager is authorized to make management decisions which govern the operation of the regulated facility including having the explicit or implicit duty of making major capital investment recommendations, and initiating and directing other comprehensive measures to assure long-term environmental compliance with environmental laws and regulations; the manager can ensure that the necessary systems are established or actions taken to gather complete and accurate information for permit application requirements; and where authority to sign documents has been assigned or delegated

Appendix N - List of SIC and NAICS Codes

Sector A. Timber Products

Sub-sector	SIC Codes		NAICS Codes		Notes
A3	**2411**	Logging (log storage and handling activities only; wet deck storage areas only authorized if no chemical additives are used in the spray water or applied to the logs.)	**113310**	Logging	
A1	**2421**	General Sawmills and Planing Mills (sawmills)	**321113**	Sawmills	
		(lumber manufacturing from purchased lumber, softwood cut stock, wood lath, fence pickets, and planing mill products)	**321912**	Cut Stock, Resawing Lumber, and Planing	
		(softwood flooring)	**321918**	Other Millwork (including Flooring)	
		(box lumber made from purchased lumber)	**321920**	Wood Container and Pallet Manufacturing	
		(kiln drying)	**321999**	All Other Miscellaneous Wood Product Manufacturing	
A4	**2426**	Hardwood Dimension and Flooring Mills (hardwood dimension lumber made from logs or bolts)	**321113**	Sawmills	
		(hardwood cut stock, resawing hardwood lumber, and planing purchased hardwood lumber except flooring)	**321912**	Cut Stock, Resawing Lumber, and Planing	
		(hardwood flooring)	**321918**	Other Millwork (including Flooring)	
		(wood furniture frames and finished furniture parts)	**337215**	Showcase, Partition, Shelving, and Locker Manufacturing	
	2429	Special Product Sawmills, Not Elsewhere Classified (shingle mills, shakes)	**321113**	Sawmills	
		(stave manufacturing from purchased lumber)	**321912**	Cut Stock, Resawing Lumber, and Planing	
		(cooperage stock)	**321920**	Wood Container and Pallet Manufacturing	
		(excelsior)	**321999**	All Other Miscellaneous Wood Product Manufacturing	
	2431	Millwork (wood windows and doors)	**321911**	Wood Window and Door Manufacturing	

Sector A. Timber Products

Sub-sector	SIC Codes		NAICS Codes		Notes
		(except wood windows and doors)	321918	Other Millwork (including Flooring)	
	2435	Hardwood Veneer and Plywood	321211	Hardwood Veneer and Plywood Manufacturing	
	2436	Softwood Veneer and Plywood	321212	Softwood Veneer and Plywood Manufacturing	
	2439	Structural Wood Members, Not Elsewhere Classified (except trusses)	321213	Engineered Wood Member (except Truss) Manufacturing	
		(trusses)	321214	Truss Manufacturing	
A5	2441	Nailed and Lock Corner Wood Boxes and Shook	321920	Wood Container and Pallet Manufacturing	
A4	2448	Wood Pallets and Skids	321920	Wood Container and Pallet Manufacturing	
	2449	Wood Containers, Not Elsewhere Classified	321920	Wood Container and Pallet Manufacturing	
	2451	Mobil Homes	321991	Manufactured Home (Mobil Home) Manufacturing	
	2452	Prefabricated Wood Buildings and Components	321992	Prefabricated Wood Building Manufacturing	
A2	2491	Wood Preserving	321114	Wood Preservation	
A4	2493	Reconstituted Wood Products	321219	Reconstituted Wood Product Manufacturing	
	2499	Wood Products, Not Elsewhere Classified (wood containers, such as noncoopered vats and reed or straw baskets)	321920	Wood Container and Pallet Manufacturing	
		(except wood containers, wood cooling towers, cork life preservers, mirror or picture frames, and laundry hampers of reed, rattan, and willow)	321999	All Other Miscellaneous Wood Product Manufacturing	
		(wood cooling towers)	333415	Air-Conditioning and Warm Air Heating Equipment and Commercial and Industrial Refrigeration Equipment Manufacturing	
		(laundry hampers of reed, rattan, and willow)	337125	Household Furniture (except Wood and Metal) Manufacturing	
		(cork life preservers)	339113	Surgical Appliance and Supplies Manufacturing	
		(mirror and picture frames)	339999	All Other Miscellaneous Manufacturing	

Sector B. Paper and Allied Products Manufacturing

Sub-sector	SIC Codes		NAICS Codes		Notes
B2	**2611**	Pulp Mills			
		(pulp producing mills only)	**322110**	Pulp Mills	
		(producing paper except newsprint)	**322121**	Paper (except Newsprint) Mills	
		(producing newsprint)	**322122**	Newsprint Mills	
		(producing paperboard)	**322130**	Paperboard Mills	
	2621	Paper Mills			
		(except newsprint mills)	**322121**	Paper (except Newsprint) Mills	
		(newsprint mills)	**322122**	Newsprint Mills	
B1	**2631**	Paperboard Mills	**322130**	Paperboard Mills	
B2	**2652**	Setup Paperboard Boxes	**322213**	Setup Paperboard Box Manufacturing	
	2653	Corrugated and Solid Fiber Boxes	**322211**	Corrugated and Solid Fiber Boxes Manufacturing	
	2655	Fiber Cans, Tubes, Drums, and Similar Products	**322214**	Fiber Can, Tube, Drum, and Similar Products Manufacturing	
	2656	Sanitary Food Containers, Except Folding	**322215**	Nonfolding Sanitary Food Container Manufacturing	
	2657	Folding Paperwork Boxes	**322212**	Folding Paperboard Box Manufacturing	
	2671	Packaging Paper and Plastics Film, Coated and Laminated			
		(except single-web and multi-web plastics packaging film and sheets)	**322221**	Coated and Laminated Packaging Paper and Plastics Film Manufacturing	
		(single-web and multi-web plastics packaging film and sheets)	**326112**	Plastics Packaging Film and Sheet (including Laminated) Manufacturing	Any facility whose primary activity is manufacturing single-web and multi-web plastics packaging film and sheets (SIC 2671 / NAICS 326112) should be regulated under Sector Y, but may continue to be regulated under Sector B, or alternatively, under Sector AD. Sectors Y, B, and AD do not have specific requirements for facilities manufacturing single-web and multi-web plastics packaging film and sheets. However, under Sector AD EPA could establish additional facility-specific monitoring and reporting requirements. Regulatory burden would not differ between Sectors B and Y.
	2672	Coated and Laminated Paper, NEC	**322222**	Coated and Laminated Paper Manufacturing	

Sector B. Paper and Allied Products Manufacturing

Sub-sector	SIC Codes		NAICS Codes		Notes
	2673	Plastics, Foil, and Coated Paper Bags (except single-web or multi-web plastics bags)	**322223**	Plastics, Foil, and Coated Paper Bags Manufacturing	
		single-web and multi-web plastics bags)	**326111**	Plastics Bag Manufacturing	Any facility whose primary activity is manufacturing single-web and multi-web plastics bags (SIC 2673 / NAICS 326111) should be regulated under Sector Y, but may continue to be regulated under Sector B, or alternatively, under Sector AD. Sectors Y, B, and AD do not have specific requirements for facilities manufacturing single-web and multi- web plastics bags. However, under Sector AD EPA could establish additional facility-specific monitoring and reporting requirements. Regulatory burden would not differ between Sectors B and Y.
	2674	Uncoated Paper and Multiwall Bags	**322224**	Uncoated Paper and Multiwall Bags Manufacturing	
	2675	Die Cut Paper and Paperboard and Cardboard (pasted, lined, laminated, or surface-coated paperboard)	**322226**	Surface-Coated Paperboard Manufacturing	
		(die cut paper and paperboard office supplies, such as file folders, tabulating cards, and report covers)	**322231**	Die Cut Paper and Paperboard Office Supplies Manufacturing	
		(except pasted, lined, laminated, or surface-coated paperboard and die-cut paper and paperboard office supplies)	**322299**	All Other Converted Paper Product Manufacturing	
	2676	Sanitary Paper Products	**322291**	Sanitary Paper Product Manufacturing	
	2677	Envelopes	**322232**	Envelope Manufacturing	
	2678	Stationery, Tablets, and Related Products	**322233**	Stationery, Tablets, and Related Product Manufacturing	
	2679	Converted Paper and Paperboard Products, NEC (corrugated paper)	**322211**	Corrugated and Solid Fiber Box Manufacturing	
		(wallpaper and gift wrap paper)	**322222**	Coated and Laminated Paper Manufacturing	

Sector B. Paper and Allied Products Manufacturing

Sub-sector	SIC Codes		NAICS Codes		Notes
		(paper supplies for business machines, such as adding machine tape, and other paper office supplies)	**322231**	Die Cut Paper and Paperboard Office Supplies Manufacturing	
		(except corrugated paper, wall paper, gift wrap paper, paper supplies for business machines, and other paper office supplies)	**322299**	All Other Converted Paper Product Manufacturing	

Sector C. Chemical and Allied Products Manufacturing

Sub-sector	SIC Codes		NAICS Codes		Notes
C2	**2812**	Alkalies and Chlorine	**325181**	Alkalies and Chlorine Manufacturing	
	2813	Industrial Gases	**325120**	Industrial Gas Manufacturing	
	2816	Inorganic Pigments			
		(except bone and lamp black)	**325131**	Inorganic Dye and Pigment Manufacturing	
		(bone and lamp black)	**325182**	Carbon Black Manufacturing	
	2819	Industrial Inorganic Chemicals, Not Elsewhere Classified			
		(recovering sulfur from natural gas)	**211112**	Natural Gas Liquid Extraction	
		(inorganic dyes)	**325131**	Inorganic Dye and Pigment Manufacturing	
		(other)	**325131**	All Other Basic Inorganic Chemical Manufacturing	
		(activated carbon and charcoal)	**325998**	All Other Miscellaneous Chemical Product and Preparation Manufacturing	
		(alumina)	**331311**	Alumina Refining	Any facility whose primary activity is alumina refining (NAICS 331311) should be regulated under Sector F, but may continue to be regulated under Sector C. Sector C requires sector/subsector specific benchmark monitoring for total aluminum, total iron, and nitrate plus nitrite nitrogen. Sector F applies additional technology-based effluent limits comprised of good housekeeping measures; additional SWPPP requirements; and additional inspection requirements.

Sector C. Chemical and Allied Products Manufacturing

Sub-sector	SIC Codes		NAICS Codes		Notes
					Regulatory burdens differ between Sectors C and F but determining which sector would be more burdensome would depend on the regulated facility.
C4	**2821**	Plastics Materials, Synthetic Resins, and Nonvulcanizable Elastomers	**325211**	Plastics Material and Resin Manufacturing	
	2822	Synthetic Rubber	**325212**	Synthetic Rubber Manufacturing	
	2823	Cellulosic Manmade Fibers	**325221**	Cellulosic Organic Fiber Manufacturing	
	2824	Manmade Organic Fibers, Except Cellulosic	**325222**	Noncellulosic Organic Fiber Manufacturing	
C5	**2833**	Medicinal Chemicals and Botanical Products	**325411**	Medicinal and Botanical Manufacturing	
	2834	Pharmaceutical Preparations	**325412**	Pharmaceutical Preparation Manufacturing	
	2835	In Vitro and In Vivo Diagnostic Substances (except in vitro diagnostic)	**325412**	Pharmaceutical Preparation Manufacturing	
		(in vitro diagnostic substances)	**325413**	In Vitro Diagnostic Substance Manufacturing	
	2836	Biological Products, Except Diagnostic Substances	**325414**	Biological Product (except Diagnostic) Manufacturing	
C3	**2841**	Soaps and Other Detergents, Except Specialty Cleaners	**325611**	Soap and Other Detergent Manufacturing	
	2842	Specialty Cleaning, Polishing, and Sanitation Preparations	**325612**	Polish and Other Sanitation Good Manufacturing	
	2843	Surface Active Agents, Finishing Agents, Sulfonated Oils, and Assistants	**325613**	Surface Active Agent Manufacturing	
	2844	Perfumes, Cosmetics, and Other Toilet Preparations (toothpaste, gel and dentifrice powders)	**325611**	Soap and Other Detergent Manufacturing	
		(except toothpaste, gel and dentifrice powders)	**325620**	Toilet Preparation Manufacturing	
C5	**2851**	Paints, Varnishes, Lacquers, Enamels, and Allied Products	**325510**	Paint and Coating Manufacturing	
	2861	Gum and Wood Chemicals	**325191**	Gum and Wood Chemical Manufacturing	
	2865	Cyclic Organic Crudes and Intermediates, and Organic Dyes and Pigments (aromatics)	**325110**	Petrochemical Manufacturing	
		(organic dyes and pigments)	**325132**	Synthetic Organic Dye and Pigment Manufacturing	

Sector C. Chemical and Allied Products Manufacturing

Sub-sector	SIC Codes		NAICS Codes		Notes
		(except aromatics and organic dyes and pigments)	**325192**	Cyclic Crude and Intermediate Manufacturing	
	2869	Industrial Organic Chemicals, Not Elsewhere Classified (aliphatics)	**325110**	Petrochemical Manufacturing	
		(fluorocarbon gases)	**325120**	Industrial Gas Manufacturing	
		(carbon bisulfide)	**325188**	All Other Basic Inorganic Chemical Manufacturing	
		(cyclopropane, diethylcyclohexane, naphthalene sulfonic acid)	**325192**	Cyclic Crude and Intermediate Manufacturing	
		(ethyl alcohol)	**325193**	Ethyl Alcohol Manufacturing	
		(except aliphatics, carbon bisulfide, ethyl alcohol, cyclopropane, diethylcyclohexane, napthalene sulfonic acid, synthetic hydraulic fluids, and fluorocarbon gases)	**325199**	All Other Basic Organic Chemical Manufacturing	
		(synthetic hydraulic fluids)	**325998**	All Other Miscellaneous Chemical Product and Preparation Manufacturing	
C1	**2873**	Nitrogenous Fertilizers	**325311**	Nitrogenous Fertilizer Manufacturing	
	2874	Phosphatic Fertilizers	**325312**	Phosphatic Fertilizer Manufacturing	
	2875	Fertilizers, Mixing Only	**325314**	Fertilizers (Mixing Only) Manufacturing	
	2879	Pesticides and Agricultural Chemicals, NEC	**325320**	Pesticides and Other Agricultural Chemical Manufacturing	
C5	**2891**	Adhesives and Sealants	**325520**	Adhesive Manufacturing	
	2892	Explosives	**325920**	Explosives Manufacturing	
	2893	Printing Ink	**325910**	Printing Ink Manufacturing	
	2895	Carbon Black	**325182**	Carbon Black Manufacturing	
	2899	Chemicals and Chemical Preparations, NEC (table salt)	**311942**	Spice and Extract Manufacturing (table salt only)	
		(fatty acids)	**325199**	All Other Basic Organic Chemical Manufacturing	
		(frit and plastic wood fillers)	**325510**	Paint and Coating Manufacturing	
		(except frit, plastic wood fillers, fatty acids, and table salt)	**325998**	All Other Miscellaneous Chemical Product and Preparation Manufacturing	
	2911	Petroleum Refining	**324110**	Petroleum Refineries	
	3952	Lead Pencils, Crayons, and Artists' Materials (limited to inks and paints, including china painting enamels) (drawing inks and india ink)	**325998**	All Other Miscellaneous Chemical Product and Preparation Manufacturing	

Sector C. Chemical and Allied Products Manufacturing

Sub-sector	SIC Codes		NAICS Codes		Notes
		(china painting enamels, platinum paint for burnt wood or leather work, paints for china painting, artist's paints, and artist's watercolors)	339942	Lead Pencil and Art Good Manufacturing	

Sector D. Asphalt Paving and Roofing Materials Manufacturers and Lubricant Manufacturers

Sub-sector	SIC Codes		NAICS Codes		Notes
D1	2951	Asphalt Paving Mixtures and Blocks	324121	Asphalt Paving Mixture and Block Manufacturing	
	2952	Asphalt Felt and Coatings	324122	Asphalt Shingle and Coating Materials Manufacturing	
D2	2992	Lubricating Oils and Greases	324191	Petroleum Lubricating Oil and Grease Manufacturing	
	2999	Products of Petroleum and Coal, Not Elsewhere Classified	324199	All Other Petroleum and Coal Products Manufacturing	

Sector E. Glass, Clay, Cement, Concrete, and Gypsum Product Manufacturing

Sub-sector	SIC Codes		NAICS Codes		Notes
E3	3211	Flat Glass	327211	Flat Glass Manufacturing	
	3221	Glass Containers	327213	Glass Container Manufacturing	
	3229	Pressed and Blown Glass and Glassware, Not Elsewhere Classified	327212	Other Pressed and Blown Glass and Glassware Manufacturing	
	3231	Glass Product Manufacturing Made of Purchased Glass	327215	Glass Product Manufacturing Made of Purchased Glass	
	3241	Hydraulic Cement	327310	Cement Manufacturing	
E1	3251	Brick and Structural Clay Tile (except slumped brick)	327121	Brick and Structural Clay Tile Manufacturing	
		(slumped brick)	327331	Concrete Block and Brick Manufacturing	
	3253	Ceramic Wall and Floor Tile	327122	Ceramic Wall and Floor Tile Manufacturing	
	3255	Clay Refractories	327124	Clay Refractory Manufacturing	
	3259	Structural Clay Products, Not Elsewhere Classified	327123	Other Structural Clay Product Manufacturing	
	3261	Vitreous China Plumbing Fixtures and China and Earthenware Fittings and Bathroom Accessories	327111	Vitreous China Plumbing Fixture and China and Earthenware Bathroom Accessories Manufacturing	

Sector E. Glass, Clay, Cement, Concrete, and Gypsum Product Manufacturing

Sub-sector	SIC Codes		NAICS Codes		Notes
	3262	Vitreous China Table and Kitchen Articles	**327112**	Vitreous China, Fine Earthenware, and Other Pottery Product Manufacturing	
	3263	Fine Earthenware (Whiteware) Table and Kitchen Articles	**327112**	Vitreous China, Fine Earthenware, and Other Pottery Product Manufacturing	
	3264	Porcelain Electrical Supplies	**327113**	Porcelain Electrical Supply Manufacturing	
	3269	Pottery Products, Not Elsewhere Classified	**327112**	Vitreous China, Fine Earthenware, and Other Pottery Product Manufacturing	
E2	**3271**	Concrete Block and Brick	**327331**	Concrete Block and Brick Manufacturing	
	3272	Concrete Products, Except Block and Brick (concrete pipe)	**327332**	Concrete Pipe Manufacturing	
		(concrete products, except dry mix concrete and pipe)	**327390**	Other Concrete Product Manufacturing	
		(dry mixture concrete)	**327999**	All Other Miscellaneous Nonmetallic Mineral Product Manufacturing	
	3273	Ready-Mixed Concrete	**327320**	Ready-Mix Concrete Manufacturing	
	3274	Lime Manufacturing Calcium hydroxide (i.e., hydrated lime) manufacturing	**327410**	Lime Manufacturing	
		Calcium oxide (i.e., quicklime) manufacturing	**327410**	Lime Manufacturing	
		Dolomite, dead-burned, manufacturing	**327410**	Lime Manufacturing	
		Hydrated lime (i.e., calcium hydroxide) manufacturing	**327410**	Lime Manufacturing	
		Quicklime (i.e., calcium oxide) manufacturing	**327410**	Lime Manufacturing	
		Agricultural lime manufacturing	**327410**	Lime Manufacturing	
		Dolomitic lime manufacturing	**327410**	Lime Manufacturing	
	3275	Gypsum Products	**327420**	Gypsum Product Manufacturing	

Sector E. Glass, Clay, Cement, Concrete, and Gypsum Product Manufacturing

Sub-sector	SIC Codes		NAICS Codes		Notes
E3	**3281**	Cut Stone and Stone Products	**327991**	Cut Stone and Stone Product Manufacturing	
	3291	Abrasive Products (except steel wool manufacturing)	**327910**	Abrasive Product Manufacturing	
		(steel wool manufacturing)	**332999**	All Other Miscellaneous Fabricated Metal Product Manufacturing	Any facility whose primary activity is steel wool manufacturing (NAICS 332999) should be regulated under Sector AA, but may continue to be regulated under Sector E. Sector AA applies additional technology-based effluent limits comprised of good housekeeping measures, spill prevention and response procedures, and spills and leaks; additional SWPPP requirements; and additional inspection requirements. Sector E applies additional technology-based effluent limits comprised of good housekeeping measures, and additional SWPPP requirements.
					Regulatory burden would likely be greater under Sector AA.
	3292	Asbestos Products (except brake pads and linings)	**327999**	All Other Miscellaneous Nonmetallic Mineral Product Manufacturing	
		(asbestos brake linings and pads)	**336340**	Motor Vehicle Brake System Manufacturing	
		(asbestos clutch facings, motor vehicle)	**336350**	Motor Vehicle Transmission and Power Train Parts Manufacturing	
	3295	Minerals and Earths, Ground or Otherwise Treated (grinding, washing, separating, etc. of kaolin and ball clay)	**212324**	Kaolin and Ball Clay Mining	
		(grinding, washing, separating, etc. of clay, ceramic, and refractory minerals not elsewhere classified)	**212325**	Clay and Ceramic and Refractory Minerals Mining	
		(grinding, washing, separating, etc. of chemical and fertilizer minerals, not elsewhere classified)	**212393**	Other Chemical and Fertilizer Mineral Mining	
		(grinding, washing, separating, etc. of nonmetallic minerals, not elsewhere classified)	**212399**	All Other Nonmetallic Mineral Mining	
		(except grinding, washing, separating, etc. of nonmetallic minerals)	**327992**	Ground or Treated Mineral and Earth Manufacturing	

Sector E. Glass, Clay, Cement, Concrete, and Gypsum Product Manufacturing

Sub-sector	SIC Codes		NAICS Codes		Notes
	3296	Mineral Wool	**327993**	Mineral Wool Manufacturing	
	3297	Nonclay Refractories	**327125**	Nonclay Refractory Manufacturing	
	3299	Nonmetallic Mineral Products, Not Elsewhere Classified			
		(clay statuary)	**327112**	Vitreous China, Fine Earthenware, and Other Pottery Product Manufacturing	
		(moldings, ornamental and architectural plaster work, and gypsum statuary)	**327420**	Gypsum Product Manufacturing	
		(except moldings, ornamental and architectural plaster work, clay statuary, and gypsum statuary)	**327999**	All Other Miscellaneous Nonmetallic Mineral Product Manufacturing	

Sector F. Primary Metals

Sub-sector	SIC Codes		NAICS Codes		Notes
F1	**3312**	Steel Works, Blast Furnaces (Including Coke Ovens), and Rolling Mills			
		(coke oven products [e.g., coke, gases, tars] made in coke oven establishments)	**324199**	All Other Petroleum and Coal Products Manufacturing	Any facility whose primary activity is manufacturing coke oven products (e.g., coke, gases, tars) made in coke oven establishments should be regulated under Sector D, but may continue to be regulated under Sector F. Sector F requires sector-specific benchmark monitoring requirements for total aluminum and total zinc, Sector D does not require benchmark monitoring from these facilities. Regulatory burden would be greater under Sector F.
		(except coke ovens not integrated with steel mills and hot-rolling purchased steel)	**331111**	Iron and Steel Mills	
		(hot-rolling purchased steel)	**331221**	Rolled Steel Shape Manufacturing	
	3313	Electrometallurigcal Products, Except Steel	**331112**	Electrometallurigcal Ferroalloy Product Manufacturing	

Sector F. Primary Metals

Sub-sector	SIC Codes		NAICS Codes		Notes
	3315	Steel Wiredrawing and Steel Nails and Spikes (steel wire drawing)	**331222**	Steel Wire Drawing	
	3316	Cold-Rolled Steel Sheet, Strip, and Bars	**331221**	Rolled Steel Shape Manufacturing	
	3317	Steel Pipe and Tubes	**331210**	Iron and Steel Pipe and Tube Manufacturing from Purchased Steel	
F2	**3321**	Gray and Ductile Iron Foundries	**331511**	Iron Foundries	
	3322	Malleable Iron Foundries	**331511**	Iron Foundries	
	3324	Steel Investment Foundries	**331512**	Steel Investment Foundries	
	3325	Steel Foundries, NEC	**331513**	Steel Foundries (except Investment)	
F5	**3331**	Primary Smelting and Refining of Copper	**331411**	Primary Smelting and Refining of Copper	
	3334	Primary Production of Aluminum	**331312**	Primary Aluminum Production	
	3339	Primary Smelting and Refining of Nonferrous Metals, Except Copper and Aluminum	**331419**	Primary Smelting and Refining of Nonferrous Metal (except Copper and Aluminum)	
	3341	Secondary Smelting and Refining of Nonferrous Metals (aluminum)	**331314**	Secondary Smelting and Alloying of Aluminum	
		(copper)	**331423**	Secondary Smelting, Refining and Alloying of Copper	
		(except copper and aluminum)	**331492**	Secondary Smelting, Refining and Alloying of Nonferrous Metal (except Copper and Aluminum)	
F3	**3351**	Rolling, Drawing, and Extruding of Copper	**331421**	Copper Rolling, Drawing, and Extruding	
	3353	Aluminum Sheet, Plate, and Foil	**331315**	Aluminum Sheet, Plate, and Foil Manufacturing	
	3354	Aluminum Extruded Products	**331316**	Aluminum Extruded Product Manufacturing	
	3355	Aluminum Rolling and Drawing, Not Elsewhere Classified	**331319**	Other Aluminum Rolling and Drawing	
	3356	Rolling, Drawing, and Extruding of Nonferrous Metals, Except Copper and Aluminum	**331491**	Nonferrous Metal (Except Copper and Aluminum) Rolling, Drawing, and Extruding	
	3357	Drawing and Insulating of Nonferrous Wire (aluminum wire drawing)	**331319**	Other Aluminum Rolling and Drawing	
		(copper wire drawing)	**331422**	Copper Wire (except Mechanical) Drawing	
		(wire drawing except copper or aluminum)	**331491**	Nonferrous Metal (except Copper and Aluminum) Rolling, Drawing, and Extruding	

Sector F. Primary Metals

Sub-sector	SIC Codes		NAICS Codes		Notes
		(fiber optic cable-insulating only)	**335921**	Fiber Optic Cable Manufacturing	
		(communication and energy wire, except fiber optic-insulating only)	**335929**	Other Communication and Energy Wire Manufacturing	
F4	**3363**	Aluminum Die Castings	**331521**	Aluminum Die Casting Foundries	
	3364	Nonferrous Die Castings, Except Aluminum	**331522**	Nonferrous (Except Aluminum) Die Casting Foundries	
	3365	Aluminum Foundries	**331524**	Aluminum Foundries (Except Die-Casting)	
	3366	Copper Foundries	**331525**	Copper Foundries (Except Die-Casting)	
	3369	Nonferrous Foundries, Except Copper and Aluminum	**331528**	Other Nonferrous Foundries (Except Die-Casting)	
F5	**3398**	Metal Heat Treating	**332811**	Metal Heat Treating	
	3399	Primary Metal Products, Not Elsewhere Classified (iron ore recovery from open hearth slag)	**331111**	Iron and Steel Mills	
		(ferrous powder, paste, flakes, etc.)	**331221**	Rolled Steel Shape Manufacturing	
		(aluminum powder, paste, flakes, etc.)	**331314**	Secondary Smelting and Alloying of Aluminum	
		(copper powder, paste, flakes, etc.)	**331423**	Secondary Smelting, Refining, and Alloying of Copper	
		(nonferrous powder, paste, flakes, etc. except copper and aluminum)	**331492**	Secondary Smelting, Refining, and Alloying of Nonferrous Metal (except Copper and Aluminum)	
		(nonferrous nails, brads, staples, tacks, etc. made from purchased nonferrous wire)	**332618**	Other Fabricated Wire Product Manufacturing	

Sector G. Metal Mining (Ore Mining and Dressing)

Sub-sector	SIC Codes		NAICS Codes		Notes
G1	**1021**	Copper Ores	**212234**	Copper Ore and Nickel Ore Mining	
G2	**1011**	Iron Ores	**212210**	Iron Ore Mining	
	1021	Copper Ores	**212234**	Copper Ore and Nickel Ore Mining	
	1031	Lead and Zinc Ores	**212231**	Lead Ore and Zinc Ore Mining	
	1041	Gold Ores	**212221**	Gold Ore Mining	
	1044	Silver Ores	**212222**	Silver Ore Mining	
	1061	Ferroalloy Ores, Except Vanadium (nickel)	**212234**	Copper Ore and Nickel Ore Mining	
		(other ferroalloys except nickel)	**212299**	All Other Metal Ore Mining	
		Metal Mining Services			

Sector G. Metal Mining (Ore Mining and Dressing)

Sub-sector	SIC Codes		NAICS Codes		Notes
	1081	(except site preparation and related activities performed on a contract or fee basis and geophysical surveying and mapping)	**213114**	Support Activities for Metal Mining	
		(site preparation and related construction activities on a contract basis)	**238910**	Site Preparation Contractors	
	1094	Uranium-Radium-Vanadium Ores	**212291**	Uranium-Radium-Vanadium Ore Mining	
	1099	Miscellaneous Metal Ores, Not Elsewhere Classified	**212299**	All Other Metal Ore Mining	

Sector H. Coal Mines and Coal Mining-Related Facilities

Sub-sector	SIC Codes		NAICS Codes		Notes
H1	**1221**	Bituminous Coal and Lignite Surface Mining	**212111**	Bituminous Coal and Lignite Surface Mining	
	1222	Bituminous Coal Underground Mining	**212112**	Bituminous Coal Underground Mining	
	1231	Anthracite Mining	**212113**	Anthracite Mining	
	1241	Coal Mining Services (except site preparation and related construction activities on a contract basis)	**213113**	Support Activities for Coal Mining	
		(site preparation and related construction activities on a contract basis)	**238910**	Site Preparation Contractors	

Sector I. Oil and Gas Extraction

Sub-sector	SIC Codes		NAICS Codes		Notes
I1	**1311**	Crude Petroleum and Natural Gas	**211111**	Crude Petroleum and Natural Gas Extraction	
	1321	Natural Gas Liquids	**211112**	Natural Gas Liquid Extraction	
	1381	Drilling Oil and Gas Wells	**213111**	Drilling Oil and Gas Wells	
	1382	Oil and Gas Field Exploration Services	**213112**	Support Activities for Oil and Gas Operations	
	1389	Oil and Gas Field Services, Not Elsewhere Classified (except construction of field gathering lines, site preparation and related construction activities performed on a contract or fee basis)	**213112**	Support Activities for Oil and Gas Operations	
		(construction of field gathering lines on a contract or fee basis)	**237120**	Oil and Gas Pipeline and Related Structures Construction	
		(site preparation and related construction activities on a contract basis)	**238910**	Site Preparation Contractors	

Sector J. Mineral Mining and Dressing

Sub-sector	SIC Codes		NAICS Codes		Notes
J2	**1411**	Dimension Stone	**212311**	Dimension Stone Mining and Quarrying	
	1422	Crushed and Broken Limestone	**212312**	Crushed and Broken Limestone Mining and Quarrying	
	1423	Crushed and Broken Granite	**212313**	Crushed and Broken Granite Mining and Quarrying	
	1429	Crushed and Broken Stone, Not Elsewhere Classified	**212319**	Other Crushed and Broken Stone Mining and Quarrying	
J1	**1442**	Construction Sand and Gravel	**212321**	Construction Sand and Gravel Mining	
	1446	Industrial Sand	**212322**	Industrial Sand Mining	
J3	**1455**	Kaolin and Ball Clay	**212324**	Kaolin and Ball Clay Mining	
	1459	Clay, Ceramic, and Refractory Minerals, Not Elsewhere Classified	**212325**	Clay, Ceramic, and Refractory Minerals Mining	
	1474	Potash, Soda, and Borate Minerals	**212391**	Potash, Soda, and Borate Mineral Mining	
	1475	Phosphate Rock	**212392**	Phosphate Rock Mining	
	1479	Chemical and Fertilizer Mineral Mining, Not Elsewhere Classified	**212393**	Other Chemical and Fertilizer Mineral Mining	

Sector J. Mineral Mining and Dressing

Sub-sector	SIC Codes		NAICS Codes		Notes
J2	**1481**	Nonmetallic Minerals Services, Except Fuels			
		(except geophysical surveying and mapping and site preparation and related construction activities performed on a contract or fee basis)	**213115**	Support Activities for Nonmetallic Minerals (except Fuels)	
		(site preparation and related construction activities on a contract basis)	**238910**	Site Preparation Contractors	
	1499	Miscellaneous Nonmetallic Minerals, Except Fuels			
		(except bituminous limestone and bituminous sandstone)	**212399**	All Other Nonmetallic Mineral Mining	

Sector K. Hazardous Waste Treatment, Storage or Disposal Facilities

Sub-Sector	Activity Code	Narrative Description	Notes
K1	**HZ**	• Hazardous waste treatment • Hazardous waste storage • Hazardous waste disposal • Hazardous waste facilities operating under interim status • Hazardous waste facilities operating under a permit under Subtitle C of RCRA	HZ is the Activity Code (i.e., non-SIC / non-NAICS designation) for this Sector. It potentially applies to any facility regardless of SIC / NAICS Code, in addition to these specifically related to hazardous waste: • SIC 4953 Refuse Systems (hazardous waste treatment and disposal); • NAICS 562211 Hazardous Waste Treatment and Disposal; • NAICS 562112 Hazardous Waste Collection (hazardous waste transfer stations).

Sector L. Landfills and Land Application Sites

Sub-Sector	Activity Code	Narrative Description	Notes
L1	**LF**	• All Landfill, Land Application Sites and Open Dumps	LF is the Activity Code (i.e., non-SIC and non-NAICS designation) for this Sector. It may apply to any facility / SIC Code / NAICS Code, in addition to these specifically related to landfills and landfill application sites: • SIC 4953 Refuse Systems (solid waste landfills); • NAICS 562212 Solid Waste Landfill. Industrial waste is waste from any of the facilities covered by the MSGP (also described in 40 CFR 122.26(b)(14)).
L2	**LF**	All Landfill, Land Application Sites and Open Dumps, except Municipal Solid Waste Landfill (MSWLF) Areas Closed in Accordance with 40 CFR 258.	

Sector M. Automobile Salvage Yards

Sub-sector	SIC Codes		NAICS Codes		Notes
M1	**5015**	Motor Vehicle Parts, Used (merchant wholesalers except those selling via retail method)	**423140**	Motor Vehicle Parts (Used) Merchant Wholesalers	

Sector N. Scrap Recycling Facilities

Sub-sector	SIC Codes		NAICS Codes		Notes
N1	**5093**	Scrap and Waste Materials (merchant wholesalers except Source-Separated Recycling)	**423930**	Recyclable Material Merchant Wholesalers	
N2	**5093**	Scrap and Waste Materials (Source-Separated Recycling)	**423930**	Recyclable Material Merchant Wholesalers	

Sector O. Steam Electric Generating Facilities

Sub-Sector	Activity Code	Narrative Description	Notes
O1	**SE**	• steam electric power generation using coal, including coal handling areas • steam electric power generation using natural gas • steam electric power generation using oil • steam electric power generation using nuclear energy • steam electric power generation using any other fuel to produce a steam source • coal pile runoff (includes effluent limitations established by 40 CFR 423) • dual fuel co-generation (i.e., steam generation using fossil fuel to augment a heat-capture generation system)	SE is the Activity Code (i.e., non-SIC and non-NAICS designation) for this Sector. It may apply to any facility / SIC Code / NAICS Code, in addition to these specifically related to steam electric generation: • SIC 4911 Electric Services (fossil fuel power generation, nuclear electric power generation & other electric power generation) • NAICS 221112 Fossil Fuel Electric Power Generation • NAICS 221113 Nuclear Electric Power Generation

Sector P. Land Transportation

Sub-sector	SIC Codes		NAICS Codes		Notes
P1	**4011**	Railroads, Line-Haul Operating	**482111**	Line-Haul Railroads	
	4013	Railroad Switching and Terminal Establishments			
		(short line railroads)	**482112**	Short Line Railroads	
		(except short line railroads)	**488210**	Support Activities for Rail Transportation	
	4111	Local and Suburban Transit			
		(mixed mode)	**485111**	Mixed Mode Transit Systems	
		(commuter rail)	**485112**	Commuter Rail Systems	
		(bus and motor vehicle)	**485113**	Bus and Other Motor Vehicle Transit Systems	
		(except mixed mode, commuter rail, airport transportation service, and bus and motor vehicle)	**485119**	Other Urban Transit Systems	
		(airport transportation service)	**485999**	All Other Transit and Ground Passenger Transportation	
	4119	Local Passenger Transportation, Not Elsewhere Classified			
		(limousine rental with driver and automobile rental with driver)	**485320**	Limousine Service	
		(employee transportation)	**485410**	School and Employee Bus Transportation	
		(special needs transportation)	**485991**	Special Needs Transportation	
		(hearse rental with driver and carpool and vanpool operation)	**485999**	All Other Transit and Ground Passenger Transportation	
		(sightseeing buses and cable and cog railways, except scenic)	**487110**	Scenic and Sightseeing Transportation, Land	
		(land ambulance)	**621910**	Ambulance Services	
	4121	Taxicabs	**485310**	Taxi Service	
	4221	Farm Product Warehousing and Storage			
	4222	Refrigerated Warehousing and Storage			
	4225	General Warehousing and Storage			
	4131	Intercity and Rural Bus Transportation	**485210**	Interurban and Rural Bus Transportation	
	4141	Local Bus Charter Service	**485510**	Charter Bus Industry	
	4142	Bus Charter Service, Except Local	**485510**	Charter Bus Industry	
	4151	School Buses	**485410**	School and Employee Bus Transportation	
	4173	Terminal and Service Facilities for Motor Vehicle Passenger Transportation	**488490**	Other Support Activities for Road Transportation	
	4212	Local Trucking Without Storage			
		(general freight)	**484110**	General Freight Trucking, Local	
		(household goods moving)	**484210**	Used Household and Office Goods Moving	

Sector P. Land Transportation

Sub-sector	SIC Codes		NAICS Codes		Notes
		(specialized freight)	**484220**	Specialized Freight (except Used Goods) Trucking, Local	
		(solid waste collection without disposal)	**562111**	Solid Waste Collection	
		(hazardous waste collection without disposal)	**562112**	Hazardous Waste Collection	
		(other waste collection without disposal)	**562119**	Other Waste Collection	
	4213	Trucking, Except Local (general freight, truckload)	**484121**	General Freight Trucking, Long-Distance, Truckload	
		(general freight, less than truckload)	**484122**	General Freight Trucking, Long-Distance, Less Than Truckload	
		(household goods moving)	**484210**	Used Household and Office Goods Moving	
		(specialized freight)	**484230**	Specialized Freight (except Used Goods) Trucking, Long-Distance	
	4214	Local Trucking With Storage (general freight)	**484110**	General Freight Trucking, Local	
		(household goods moving)	**484210**	Used Household and Office Goods Moving	
		(specialized freight)	**484220**	Specialized Freight (except Used Goods) Trucking, Local	
	4215	Courier Services, Except by Air (hub and spoke intercity delivery)	**492110**	Couriers	
		(local delivery)	**492210**	Local Messengers and local Delivery	
	4226	Special Warehousing and Storage, Not Elsewhere Classified (warehousing in foreign trade zones)	**493110**	General Warehousing and Storage	
		(fur storage)	**493120**	Refrigerated Warehousing and Storage	
		(except fur storage and warehousing in foreign trade zones)	**493190**	Other Warehousing and Storage	
	4231	Terminal and Joint Terminal Maintenance Facilities for Motor Freight Transportation	**488490**	Other Support Activities for Road Transportation	
	4311	United States Postal Service	**491110**	Postal Service	
	5171	Petroleum Bulk Stations and Terminals (except petroleum sold via retail method)	**424710**	Petroleum Bulk Stations and Terminals	
		(heating oil sold to final consumer)	**454311**	Heating Oil Dealers	
		(LP gas sold to final consumer)	**454312**	Liquefied Petroleum Gas (Bottled Gas) Dealers	

Sector Q. Water Transportation

Sub-sector	SIC Codes		NAICS Codes		Notes
Q1	**4412**	Deep Sea Foreign Transportation of Freight	**483111**	Deep Sea Freight Transportation	
	4424	Deep Sea Domestic Transportation of Freight	**483113**	Coastal and Great Lakes Freight Transportation	
	4432	Freight Transportation on the Great Lakes - St. Lawrence Seaway	**483113**	Coastal and Great Lakes Freight Transportation	
	4449	Water Transportation of Freight, Not Elsewhere Classified	**483211**	Inland Water Freight Transportation	
	4481	Deep Sea Transportation of Passengers, Except by Ferry (deep sea activities)	**483112**	Deep Sea Passenger Transportation	
		(coastal activities)	**483114**	Coastal and Great Lakes Passenger Transportation	
	4482	Ferries (coastal and Great Lakes)	**483114**	Coastal and Great Lakes Passenger Transportation	
		(inland)	**483212**	Inland Water Passenger Transportation	
	4489	Water Transportation of Passengers, Not Elsewhere Classified (water taxis)	**483212**	Inland Water Passenger Transportation	
		(airboats, excursion boats, and sightseeing boats)	**487210**	Scenic and Sightseeing Transportation, Water	
	4491	Marine Cargo Handling (dock and pier operations)	**488310**	Port and Harbor Operations	
		(all but dock and pier operations)	**488320**	Marine Cargo Handling	
	4492	Towing and Tugboat Services	**488330**	Navigational Services to Shipping	
	4493	Marinas	**713930**	Marinas	
	4499	Water Transportation Services, Not Elsewhere Classified (lighterage)	**483211**	Inland Water Freight Transportation	
		(lighthouse and canal operations)	**488310**	Port and Harbor Operations	
		(piloting vessels in and out of harbors and marine salvage)	**488330**	Navigational Services to Shipping	
		(all but lighthouse operations, piloting vessels in and out of harbors, boat and ship rental, marine salvage, lighterage, marine surveyor services, and canal operations)	**488390**	Other Support Activities for Water Transportation	
		(boat and ship rental, commercial)	**532411**	Commercial Air, Rail, and Water Transportation Equipment Rental and Leasing	

Sector R. Ship and Boat Building and Repair Yards

Sub-sector	SIC Codes		NAICS Codes		Notes
R1	**3731**	Ship Building and Repairing			
		(except repairs in floating drydocks)	**336611**	Ship Building and Repairing	
		(repair services provided by floating drydocks)	**488390**	Other Support Activities for Water Transportation (includes ship scaling facilities)	
	3732	Boat Building and Repairing			
		(boat building)	**336612**	Boat Building	
		(pleasure boat repair and maintenance services without retailing new boats)	**811490**	Other Personal and Household Goods Repair and Maintenance	
		(ship scaling)	**488390**	Other Support Activities for Water Transportation (drydocks, floating [i.e., routine repair and maintenance of ships]; other support activities for water transportation; ship dismantling at floating drydock; ship scaling services not done at a shipyard)	
		(motorboat [i.e., inboard and outboard] repair and maintenance services; outboard motor repair shops)	**811490**	Other Personal and Household Goods Repair and Maintenance	

Sector S. Air Transportation Facilities

Sub-sector	SIC Codes		NAICS Codes		Notes
S1	**4512**	Air Transportation, Scheduled			
		(passenger)	**481111**	Scheduled Passenger Air Transportation	
		(freight)	**481112**	Scheduled Freight Air Transportation	
	4513	Air Courier Services	**492110**	Couriers	
	4522	Air Transportation, Nonscheduled			
		(passenger)	**481211**	Nonscheduled Chartered Passenger Air Transportation	
		(freight)	**481212**	Nonscheduled Chartered Freight Air Transportation	

Sector S. Air Transportation Facilities

Sub-sector	SIC Codes		NAICS Codes		Notes
		(using general purpose aircraft for a variety of passenger, freight, courier, and other uses)	**481219**	Other Nonscheduled Air Transportation	
		(sightseeing planes)	**487990**	Scenic and Sightseeing Transportation, Other	
		(air ambulance)	**621910**	Ambulance Services	
	4581	Airports, Flying Fields, and Airport Terminal Services (air freight handling at airports, hangar operations, airport terminal services, aircraft storage, airports, and flying fields)	**488119**	Other Airport Operations	
		(aircraft servicing and repairing)	**488190**	Other Support Activities for Air Transportation	

Sector T. Treatment Works

Sub-sector	Activity Code	Narrative Description	Notes
T1	**TW**	• treatment works with a design flow of 1.0 MGD or more treating domestic sewage or any other sewage sludge; • wastewater treatment devices or system used by the treatment works for the storage, treatment, recycling and reclamation of municipal or domestic sewage; • land located within the confines of the treatment works that is dedicated to the disposal of sewage sludge; • treatment works required to have an approved pretreatment program under 40 CFR Part 403	TW is the Activity Code (i.e., non-SIC and non-NAICS designation) for this Sector. It may apply to any facility / SIC Code / NAICS Code, in addition to these specifically related to treatment works: • SIC 4952 Sewerage Systems • NAICS 221320 Sewage Treatment Facilities

Sector U. Food and Kindred Products

Sub-sector	SIC Codes		NAICS Codes		Notes
U3	2011	Meat Packing Plants	311611	Animal (except Poultry) Slaughtering	
	2013	Sausages and Other Prepared Meat Products (except lard made from purchased materials)	311612	Meat Processed from Carcasses	
		(lard made from purchased materials)	311613	Rendering and Meat Byproduct Processing	
	2015	Poultry Slaughtering and Processing (poultry slaughtering and processing)	311615	Poultry Processing	
		(egg processing)	311999	All Other Miscellaneous Food Manufacturing	
	2021	Creamery Butter	311512	Creamery Butter Manufacturing	
	2022	Natural, Processed, and Imitation Cheese	311513	Cheese Manufacturing	
	2023	Dry, Condensed and Evaporated Dairy Products (liquid non-dairy creamer)	311511	Fluid Milk Manufacturing	
		(except liquid non-dairy creamer)	311514	Dry, Condensed, and Evaporated Dairy Product Manufacturing	
	2024	Ice Cream and Frozen Deserts	311520	Ice Cream and Frozen Desert Manufacturing	
	2026	Fluid Milk (except ultra-high temperature)	311511	Fluid Milk Manufacturing	
		(ultra-high temperature)	311514	Dry, Condensed, and Evaporated Dairy Product Manufacturing	
	2032	Canned Specialties (except canned puddings)	311422	Specialty Canning	
		(canned puddings)	311999	All Other Miscellaneous Food Manufacturing	
	2033	Canned Fruits, Vegetables, Preserves, Jams, and Jellies	311421	Fruit and Vegetable Canning	
	2034	Dried and Dehydrated Fruits, Vegetables and Soup Mixes (vegetable flour)	311211	Flour Milling	
		(except vegetable flour and soup mixes made from purchased dried and dehydrated ingredients)	311423	Dried and Dehydrated Food Manufacturing	
		(soup mixes made from purchased dehydrated ingredients)	311999	All Other Miscellaneous Food Manufacturing	
	2035	Pickled Fruits and Vegetables, Vegetable Sauces and Seasonings, and Salad Dressings (pickled fruits and vegetables)	311421	Fruit and Vegetable Canning	
		(sauces and salad dressings)	311941	Mayonnaise, Dressing, and Other Prepared Sauce Manufacturing	

Sector U. Food and Kindred Products

Sub-sector	SIC Codes		NAICS Codes		Notes
	2037	Frozen Fruits, Fruit Juices, and Vegetables	**311411**	Frozen Fruit, Juice, and Vegetable Manufacturing	
	2038	Frozen Specialties, Not Elsewhere Classified	**311412**	Frozen Specialty Food Manufacturing	
U1	**2041**	Flour and Other Grain Mill Products	**311211**	Flour Milling	
	2043	Cereal Breakfast Foods (cereal breakfast foods and related preparations except grain based coffee substitutes)	**311230**	Breakfast Cereal Manufacturing	
		(grain based coffee substitutes)	**311920**	Coffee and Tea Manufacturing	
	2044	Rice Milling	**311212**	Rice Milling	
	2045	Prepared Flour Mixes and Doughs	**311822**	Flour Mixes and Dough Manufacturing from Purchased Flour	
	2046	Wet Corn Milling (except refining purchased corn oil)	**311221**	Wet Corn Milling	
		(refining purchased corn oil)	**311225**	Fats and Oils Refining and Blending	
	2047	Dog and Cat Food	**311111**	Dog and Cat Food Manufacturing	
	2048	Prepared Feeds and Feed Ingredients for Animals and Fowls, Except Dogs and Cats (except slaughtering animals for pet food)	**311119**	Other Animal Food Manufacturing	
		(slaughtering animals for pet food)	**311611**	Animal (except Poultry) Slaughtering	
U3	**2051**	Bread and Other Bakery Products, Except Cookies and Crackers	**311812**	Commercial Bakeries	
	2052	Cookies and Crackers (unleavened bread and soft pretzels)	**311812**	Commercial Bakeries	
		(except unleavened bread and pretzels)	**311821**	Cookie and Cracker Manufacturing	
		(hard pretzels and snack pretzels, except soft)	**311919**	Other Snack Food Manufacturing (pretzels, except soft)	
	2053	Frozen Bakery Products, Except Bread	**311813**	Frozen Cakes, Pies, and Other Pastries Manufacturing	
	2061	Cane Sugar, Except Refining	**311311**	Sugarcane Mills	
	2062	Cane Sugar Refining	**311312**	Cane Sugar Refining	
	2063	Beet Sugar	**311313**	Beet Sugar Manufacturing	
	2064	Candy and Other Confectionery Products (chocolate confectionery)	**311330**	Confectionery Manufacturing from Purchased Chocolate	
		(nonchocolate confectionery)	**311340**	Nonchocolate Confectionery Manufacturing	

Sector U. Food and Kindred Products

Sub-sector	SIC Codes		NAICS Codes		Notes
	2066	Chocolate and Cocoa Products			
		(except chocolate products, made from purchased chocolate)	**311320**	Chocolate and Confectionery Manufacturing from Cacao Beans	
		(chocolate products made from purchased chocolate)	**311330**	Confectionery Manufacturing from Purchased Chocolate	
	2067	Chewing Gum	**311340**	Nonchocolate Confectionery Manufacturing	
	2068	Salted and Roasted Nuts and Seeds	**311911**	Roasted Nuts and Peanut Butter Manufacturing	
U2	**2074**	Cottonseed Oil Mills			
		(cottonseed processing)	**311223**	Other Oilseed Processing	
		(processing purchased cottonseed oil)	**311225**	Fats and Oils Refining and Blending	
	2075	Soybean Oil Mills			
		(soybean processing, except edible soybean oil)	**311222**	Soybean Processing	
		(processing purchased soybean oil)	**311225**	Fats and Oils Refining and Blending	
	2076	Vegetable Oil Mills, Except Corn, Cottonseed, and Soybean			
		(oilseed processing)	**311223**	Other Oilseed Processing	
		(processing purchased vegetable and oilseed oils)	**311225**	Fats and Oils Refining and Blending	
	2077	Animal and Marine Fats and Oils			
		(animal fats and oils)	**311613**	Rendering and Meat Byproduct Processing	
		(canned marine fats and oils)	**311711**	Seafood Canning	
		(fresh and frozen marine fats and oils)	**311712**	Fresh and Frozen Seafood Processing	
	2079	Shortening, Table Oils, Margarine, and Other Edible Fats and Oils, Not Elsewhere Classified			
		(processing soybean oil into edible cooking oils from soybeans crushed in the same establishment)	**311222**	Soybean Processing	
		(processing vegetable oils, except soybean, into edible cooking oils from oilseeds and vegetables crushed in the same establishment)	**311223**	Other Oilseed Processing	
		(except processing vegetable and soybean oils into edible oils from oilseeds and vegetables crushed in the same establishment)	**311225**	Fats and Oils Refining and Blending	
U3	**2082**	Malt Beverages			
		(malt extract)	**311942**	Spice and Extract Manufacturing	
		(except malt extract)	**312120**	Breweries	
	2083	Malt	**311213**	Malt Manufacturing	

Sector U. Food and Kindred Products

Sub-sector	SIC Codes		NAICS Codes		Notes
	2084	Wines, Brandy and Brandy Spirits	**312130**	Wineries	
	2085	Distilled and Blended Liquors			
		(apple jack)	**312130**	Wineries	
		(except apple jack)	**312140**	Distilleries	
	2086	Bottled and Canned Soft Drinks and Carbonated Water			
		(except bottled water)	**312111**	Soft Drink Manufacturing	
		(bottled water)	**312112**	Bottled Water Manufacturing	
	2087	Flavoring Extracts and Flavoring Syrups, Not Elsewhere Classified			
		(coffee flavoring and syrups)	**311920**	Coffee and Tea Manufacturing	
		(flavoring syrups and concentrates except coffee)	**311930**	Flavoring Syrup and Concentrate Manufacturing	
		(flavoring extracts and natural food colorings)	**311942**	Spice and Extract Manufacturing	
		(powered drink mix)	**311999**	All Other Miscellaneous Food Manufacturing	
	2091	Canned and Cured Fish and Seafoods	**311711**	Seafood Canning	
	2092	Prepared Fresh or Frozen Fish and Seafoods	**311712**	Fresh and Frozen Seafood Processing	
	2095	Roasted Coffee	**311920**	Coffee and Tea Manufacturing	
	2096	Potato Chips, Corn Chips, and Similar Snacks	**311919**	Other Snack Food Manufacturing	
	2097	Maufactured Ice	**312113**	Ice manufacturing	
	2098	Macaroni, Spaghetti, Vermicelli, and Noodles	**311823**	Dry Pasta Manufacturing	
	2099	Food Preparations, Not Elsewhere Classified			
		(rice, uncooked and packaged with other ingredients made in rice mills)	**311212**	Rice Milling	
		(marshmallow creme)	**311340**	Nonchocolate Confectionery Manufacturing	
		(bouillon and potatoes dried and packaged with other ingredients produced in dehydrating plants)	**311423**	Dried and Dehydrated Food Manufacturing	
		(dry pasta packaged with other ingredients made in dry pasta plants)	**311823**	Dry Pasta Manufacturing	
		(tortillas)	**311830**	Tortilla Manufacturing	
		(peanut butter)	**311911**	Roasted Nuts and Peanut Butter Manufacturing	
		(tea)	**311920**	Coffee and Tea Manufacturing	
		(vinegar, prepared dip)	**311941**	Mayonnaise, Dressing, and Other Prepared Sauce Manufacturing	

Sector U. Food and Kindred Products

Sub-sector	SIC Codes		NAICS Codes		Notes
		(spices, dry dip mix, dry salad dressing mix, and seasoning mix)	**311942**	Spice and Extract Manufacturing	
		(perishable prepared food)	**311991**	Perishable Prepared Food Manufacturing	
		(except bouillon, marshmallow creme, spices, peanut butter, perishable prepared foods, tortillas, tea and tea extracts, dry dip mix, prepared dips, dry salad dressing mix, seasoning mix, dried potatoes, pasta, and rice mixed with other ingredients in mills or dehydrating plants, reducing maple sap to maple syrup, wool grease, and vinegar)	**311999**	All Other Miscellaneous Food Manufacturing	
	2111	Cigarettes	**312221**	Cigarette Manufacturing	
	2121	Cigars	**312229**	Other Tobacco Product Manufacturing	
	2131	Chewing and Smoking Tobacco and Snuff	**312229**	Other Tobacco Product Manufacturing	
	2141	Tobacco Stemming and Redrying (stemming and redrying tobacco)	**312210**	Tobacco Stemming and Redrying	
		(reconstituted tobacco)	**312229**	Other Tobacco Product Manufacturing	

Sector V. Textile Mills, Apparel, and Other Fabric Product Manufacturing

Sub-sector	SIC Codes		NAICS Codes		Notes
V1	**2211**	Broadwoven Fabric Mills, Cotton	**313210**	Broadwoven Fabric Mills	
	2221	Broadwoven Fabric Mills, Manmade Fiber and Silk	**313210**	Broadwoven Fabric Mills	
	2231	Broadwoven Fabric Mills, Wool (Including Dyeing and Finishing) (except finishing wool fabric without weaving wool fabric)	**313210**	Broadwoven Fabric Mills 2231	
		(wool broadwoven fabric finishing without weaving fabric)	**313311**	Broadwoven Fabric Finishing Mills	
		(wool fabric, except broadwoven, finishing without weaving fabric)	**313312**	Textile and Fabric Finishing (except Broadwoven Fabric) Mills	
	2241	Narrow Fabric and Other Smallwares Mills: Cotton, Wool, Silk and Manmade Fiber	**313221**	Narrow Fabric Mills	
	2251	Women’s Full-Length and Knee-Length Hosiery, Except Socks	**313312**	Textile and Fabric Finishing (except Broadwoven Fabric) Mills	

Sector V. Textile Mills, Apparel, and Other Fabric Product Manufacturing

Sub-sector	SIC Codes		NAICS Codes		Notes
		(dyeing and finishing sheer hosiery without knitting sheer hosiery)			
		(except dyeing and finishing sheer hosiery without knitting sheer hosiery)	**315111**	Sheer Hosiery Mills	
	2252	Hosiery, Not Elsewhere Classified (dyeing and finishing hosiery , except sheer, without knitting hosiery)	**313312**	Textile and Fabric Finishing (except Broadwoven Fabric) Mills	
		(girls' full length and knee length sheer hosiery)	**315111**	Sheer Hosiery Mills	
		(except girls' full-length and knee-length sheer hosiery and dyeing and finishing hosiery without knitting hosiery)	**315119**	Other Hosiery and Sock Mills	
	2253	Knit Outerwear Mills (dyeing and finishing knit outerwear without knitting outerwear)	**313312**	Textile and Fabric Finishing (except Broadwoven Fabric) Mills	
		(except bath and lounging robes and dying and finish without knitting garments)	**315191**	Outerwear Knitting Mills	
		(knitting bath or lounging robes)	**315192**	Underwear and Nightwear Knitting Mills	
	2254	Knit Underwear and Nightwear Mills (dyeing and finishing underwear and nightwear without knitting garments)	**313312**	Textile and Fabric Finishing (except Broadwoven Fabric) Mills	
		(except dyeing and finishing underwear and nightwear without knitting garments)	**315192**	Underwear and Nightwear Knitting Mills	
	2257	Weft Knit Fabric Mills (except finishing without knitting weft fabric)	**313241**	Weft Knit Fabric Mills	
		(finishing weft fabric without knitting weft fabric)	**313312**	Textile and Fabric Finishing (except Broadwoven Fabric) Mills	
	2258	Weft Knit Fabric Mills (except finishing without knitting weft fabric)	**313241**	Weft Knit Fabric Mills	
		(finishing weft fabric without knitting weft fabric)	**313312**	Textile and Fabric Finishing (except Broadwoven Fabric) Mills	
	2259	Knitting Mills, Not Elsewhere Classified (knitting weft fabric and fabricating textile products, such as bedspreads, curtains, or towels)	**313241**	Weft Knit Fabric Mills	

Sector V. Textile Mills, Apparel, and Other Fabric Product Manufacturing

Sub-sector	SIC Codes		NAICS Codes		Notes
		(knitting lace or warp fabric and fabricating textile products, such as bedspreads, curtains, or towels)	**313249**	Other Knit Fabric and Lace Mills	
		(dyeing and finishing knit gloves and mittens without knitting gloves or mittens)	**313312**	Textile and Fabric Finishing (except Broadwoven Fabric) Mills	
		(knitting gloves and mittens)	**315191**	Outerwear Knitting Mills	
		(knitting girdles and allied foundation garments)	**315192**	Underwear and Nightwear Knitting Mills	
	2261	Finishers of Broadwoven Fabrics of Cotton	**313311**	Broadwoven Fabric Finishing Mills	
	2262	Finishers of Broadwoven Fabrics of Manmade Fibers and Silk	**313311**	Broadwoven Fabric Finishing Mills	
	2269	Finishers of Textiles, Not Elsewhere Classified			
		(linen fabric finishing)	**313311**	Broadwoven Fabric Finishing Mills	
		(except linen fabric finishing)	**313312**	Textile and Fabric Finishing (except Broadwoven Fabric) Mills	
	2273	Carpets and Rugs	**314110**	Carpet and Rug Mills	
	2281	Yarn Spinning Mills	**313111**	Yarn Spinning Mills	
	2282	Yarn Texturizing, Throwing, Twisting and Spinning Mills	**313112**	Yarn Texturizing, Throwing, Twisting Mills	
	2284	Thread Mills			
		(except finishing thread without manufacturing thread)	**313113**	Thread Mills	
		(finishing thread without manufacturing thread)	**313312**	Textile and Fabric Finishing (except Broadwoven Fabric) Mills	
	2295	Coated Fabrics, Not Rubberized	**313320**	Fabric Coating Mills	
	2296	Tire Cord and Fabrics	**314992**	Tire Cord and Tire fabric Mills	
	2297	Nonwoven Fabrics	**313230**	Nonwoven Fabric Mills	
	2298	Cordage and Twine			
		(hemp rope made in spinning mills)	**313111**	Yarn Spinning Mills	
		(except hemp rope made in spinning mills)	**314991**	Rope, Cordage, and Twine Mills	
	2299	Textile Goods, Not Elsewhere Classified			
		(hemp bags made in spinning mills, & spinning yarn of flax, hemp, jute, and ramie)	**313111**	Yarn Spinning Mills	
		(manufacturing thread of hemp, linen, and ramie)	**313113**	Thread Mills	

Sector V. Textile Mills, Apparel, and Other Fabric Product Manufacturing

Sub-sector	SIC Codes		NAICS Codes		Notes
		(broadwoven fabrics of jute, linen, hemp, and ramie and hand woven fabrics)	**313210**	Broadwoven Fabric Mills	
		(narrow woven fabric of jute, linen, hemp, and ramie)	**313221**	Narrow Fabric Mills	
		(nonwoven felt)	**313230**	Nonwoven Fabric Mills	
		(finishing hard fiber thread and yarn without manufacturing thread or yarn)	**313312**	Textile and Fabric Finishing (except Broadwoven Fabric) Mills	
		(manufacturing other textile products)	**314999**	All Other Miscellaneous Textile Product Mills	
	2311	Men’s and Boys’ Suits, Coats, and Overcoats (contractors)	**315211**	Men’s and Boys’ Cut and Sew Apparel Contractors	
		(except contractors)	**315222**	Men’s and Boys’ Cut and Sew Suit, Coat and Overcoat Manufacturing	
	2321	Men’s and Boys’ Shirts, Except Work Shirts (contractors)	**315211**	Men's and Boys' Cut and Sew Apparel Contractors	
		(except contractors)	**315223**	Men’s and Boys’ Cut and Sew Shirt (except Work Shirt) Manufacturing	
	2322	Men’s and Boys’ Underwear and Nightwear (contractors)	**315211**	Men's and Boys' Cut and Sew Apparel Contractors	
		(except contractors)	**315221**	Men’s and Boys’ Cut and Sew Underwear and Nightwear Manufacturing	
	2323	Men's and Boys' Neckwear (contractors)	**315211**	Men's and Boys' Cut and Sew Apparel Contractors	
		(except contractors)	**315993**	Men’s and Boys’ Neckwear Manufacturing	
	2325	Men’s and Boys’ Separate Trousers and Slacks (contractors)	**315211**	Men's and Boys' Cut and Sew Apparel Contractors	
		(except contractors)	**315224**	Men’s and Boys’ Cut and Sew Trouser, Slack and Jean Manufacturing	
	2326	Men’s and Boys’ Work Clothing (contractors)	**315211**	Men's and Boys' Cut and Sew Apparel Contractors	
		(except contractors)	**315225**	Men’s and Boys’ Cut and Sew Work Clothing Manufacturing	

Sector V. Textile Mills, Apparel, and Other Fabric Product Manufacturing

Sub-sector	SIC Codes		NAICS Codes		Notes
	2329	Men's and Boys' Clothing, Not Elsewhere Classified (contractors)	**315211**	Men's and Boys' Cut and Sew Apparel Contractors	
		(except team athletic uniforms and contractors)	**315228**	Men's and Boys' Cut and Sew Other Outerwear Manufacturing	
		(team athletic uniforms except contractors)	**315299**	All Other Cut and Sew Apparel Manufacturing	
	2331	Women's, Misses', and Juniors' Blouses and Shirts (contractors)	**315212**	Women's, Girls', and Infants' Cut and Sew Apparel Contractors	
		(except contractors)	**315232**	Women's and Girls' Cut and Sew Blouse and Shirt Manufacturing	
	2335	Women's, Misses', and Juniors' Dresses (contractors)	**315212**	Women's, Girls', and Infants' Cut and Sew Apparel Contractors	
		(except contractors)	**315233**	Women's and Girls' Cut and Sew Dress Manufacturing	
	2337	Women's, Misses', and Juniors' Suits, Skirts, and Coats (contractors)	**315212**	Women's, Girls', and Infants' Cut and Sew Apparel Contractors	
		(except contractors)	**315234**	Women's and Girls' Cut and Sew Suit, Coat, Tailored Jacket, and Skirt Manufacturing	
	2339	Women's, Misses', and Juniors' Outerwear, Not Elsewhere Classified (contractors)	**315212**	Women's, Girls', and Infants' Cut and Sew Apparel Contractors	
		(except team athletic uniforms, scarves, and contractors)	**315239**	Women's and Girls' Cut and Sew Other Outerwear Manufacturing	
		(team athletic uniforms except contractors)	**315299**	All Other Cut and Sew Apparel Manufacturing	
		(scarves except contractors)	**315999**	Other Apparel Accessories and Other Apparel Manufacturing	
	2341	Women's, Misses', Children's, and Infants' Underwear and Nightwear (boys' contractors)	**315211**	Men's and Boys' Cut and Sew Apparel Contractors	
		(women's, girls', and infants' contractors)	**315212**	Women's, Girls', and Infants' Cut and Sew Apparel Contractors	

Sector V. Textile Mills, Apparel, and Other Fabric Product Manufacturing					
Sub-sector	SIC Codes		NAICS Codes		Notes
		(boys' except contractors)	**315221**	Men's and Boys' Cut and Sew Underwear and Nightwear Manufacturing	
		(women and girls' except contractors)	**315231**	Women's and Girls' Cut and Sew Lingerie, Loungewear, and Nightwear Manufacturing	
		(infants' except contractors)	**315291**	Infants' Cut and Sew Apparel Manufacturing	
	2342	Brassieres, Girdles, and Allied Garments			
		(contractors)	**315212**	Women's, Girls', and Infants' Cut and Sew Apparel Contractors	
		(except contractors)	**315231**	Women's and Girls' Cut and Sew Lingerie, Loungewear, and Nightwear Manufacturing	
	2353	Hats, Caps, and Millinery			
		(men's and boys' contractors)	**315211**	Men's and Boys' Cut and Sew Apparel Contractors	
		(women's, girls', and infants' contractors)	**315212**	Women's, Girls', and Infants' Cut and Sew Apparel Contractors	
		(except contractors)	**315991**	Hat, Cap, and Millinery Manufacturing	
	2361	Girls', Children's, and Infants' Dresses, Blouses, and Shirts			
		(boys' contractors)	**315211**	Men's and Boys' Cut and Sew Apparel Contractors	
		(girls' and infants' contractors)	**315212**	Women's, Girls', and Infants' Cut and Sew Apparel Contractors	
		(boys' shirts except contractors)	**315223**	Men's and Boys' Cut and Sew Shirt (except Work Shirt) Manufacturing	
		(girls' blouses and shirts except contractors)	**315232**	Women's and Girls' Cut and Sew Blouse and Shirt Manufacturing	
		(girls' dresses except contractors)	**315233**	Women's and Girls' Cut and Sew Dress Manufacturing	
		(infants' except contractors)	**315291**	Infants' Cut and Sew Apparel Manufacturing	
	2369	Girls', Children's, and Infants' Outerwear, Not Elsewhere Classified			
		(boys' contractors)	**315211**	Men's and Boys' Cut and Sew Apparel Contractors	
		(girls' and infants' contractors)	**315212**	Women's, Girls', and Infants' Cut and Sew Apparel Contractors	
		(boys' robes except contractors)	**315221**	Men's and Boys' Cut and Sew Underwear and Nightwear Manufacturing	
		(boys' suits and coats except contractors)	**315222**	Men's and Boys' Cut and Sew Suit, Coat, and Overcoat Manufacturing	
		(boys' trousers, slacks, and jeans except contractors)	**315224**	Men's and Boys' Cut and Sew Trouser, Slack and Jean Manufacturing	

Sector V. Textile Mills, Apparel, and Other Fabric Product Manufacturing

Sub-sector	SIC Codes		NAICS Codes		Notes
		(boys' other outerwear except contractors)	315228	Men's and Boys' Cut and Sew Other Outerwear Manufacturing	
		(girls' robes except contractors)	315231	Women's and Girls' Cut and Sew Lingerie, Loungewear, and Nightwear Manufacturing	
		(girls' suits, coats, jackets, and skirts except contractors)	315234	Women's and Girls' Cut and Sew Suit, Coat, Tailored Jacket, and Skirt Manufacturing	
		(girls' other outerwear except contractors)	315239	Women's and Girls' Cut and Sew Other Outerwear Manufacturing	
		(infants' except contractors)	315291	Infants' Cut and Sew Apparel Manufacturing	
	2371	Fur Goods			
		(men's and boys' contractors)	315211	Men's and Boys' Cut and Sew Apparel Contractors	
		(women's, girls', and infants' contractors)	315212	Women's, Girls', and Infants' Cut and Sew Apparel Contractors	
		(except contractors)	315292	Fur and Leather Apparel Manufacturing	
	2381	Dress and Work Gloves, Except Knit and All-Leather			
		(men's and boys' contractors)	315211	Men's and Boys' Cut and Sew Apparel Contractors	
		(women's, girls', and infants' contractors)	315212	Women's, Girls', and Infants' Cut and Sew Apparel Contractors	
		(except contractors)	315992	Glove and Mitten Manufacturing	
	2384	Robes and Dressing Gowns			
		(men's and boys' contractors)	315211	Men's and Boys' Cut and Sew Apparel Contractors	
		(women's, girls', and infants' contractors)	315212	Women's, Girls', and Infants' Cut and Sew Apparel Contractors	
		(men's except contractors)	315221	Men's and Boys' Cut and Sew Underwear and Nightwear Manufacturing	
		(women's except contractors)	315231	Women's and Girls' Cut and Sew Lingerie, Loungewear, and Nightwear Manufacturing	
	2385	Waterproof Outerwear			
		(men's and boys' contractors)	315211	Men's and Boys' Cut and Sew Apparel Contractors	
		(women's, girls', and infants' contractors)	315212	Women's, Girls', and Infants' Cut and Sew Apparel Contractors	
		(men's and boys' water resistant or water repellent tailored overcoats, except made from rubberized fabric, plastics, etc. and contractors)	315222	Men's and Boys' Cut and Sew Suit, Coat, and Overcoat Manufacturing	

Sector V. Textile Mills, Apparel, and Other Fabric Product Manufacturing

Sub-sector	SIC Codes		NAICS Codes		Notes
		(men’s and boys’ water resistant or water repellent nontailored outerwear, except made from rubberized fabric, plastics, etc. and contractors)	**315228**	Men’s and Boys’ Cut and Sew Other Outerwear Manufacturing	
		(women’s and girls’ water resistant or water repellent tailored coats, except made from rubberized fabric, plastics, etc. and contractors)	**315234**	Women’s and Girls’ Cut and Sew Suit, Coat, Tailored Jacket, and Skirt Manufacturing"	
		(other women’s and girls’ water resistant or water repellent nontailored outerwear, except made from rubberized fabric, plastics, etc. and contractors)	**315239**	Women’s and Girls’ Cut and Sew Other Outerwear Manufacturing	
		(infants’ waterproof outerwear made from rubberized fabric, plastics, etc. except contractors)	**315291**	Infants’ Cut and Sew Apparel Manufacturing	
		(men's, boys', women's, and girls' waterproof outerwear made from rubberized fabric, plastics, etc. except contractors)	**315299**	All Other Cut and Sew Apparel Manufacturing	
		(accessories, such as aprons, bibs, and other miscellaneous waterproof items, made from rubberized fabric, plastics, etc. except contractors)	**315999**	Other Apparel Accessories and Other Apparel Manufacturing	
	2386	Leather and Sheep-Lined Clothing (men's and boys' contractors)	**315211**	Men's and Boys' Cut and Sew Apparel Contractors	
		(women's, girls', and infants' contractors)	**315212**	Women’s, Girls’, and Infants’ Cut and Sew Apparel Contractors	
		(except contractors)	**315292**	Fur and Leather Apparel Manufacturing	
	2387	Apparel Belts (men's and boys' contractors)	**315211**	Men's and Boys' Cut and Sew Apparel Contractors	
		(women's, girls', and infants' contractors)	**315212**	Women’s, Girls’, and Infants’ Cut and Sew Apparel Contractors	
		(except contractors)	**315999**	Other Apparel Accessories and Other Apparel Manufacturing	
	2389	Apparel and Accessories, Not Elsewhere Classified (men's and boys' contractors)	**315211**	Men's and Boys' Cut and Sew Apparel Contractors	
		(women's, girls', and infants' contractors)	**315212**	Women's, Girls', and Infants' Cut and Sew Apparel Contractors	

Sector V. Textile Mills, Apparel, and Other Fabric Product Manufacturing

Sub-sector	SIC Codes		NAICS Codes		Notes
		(garters and garter belts except contractors)	315231	Women’s and Girls’ Cut and Sew Lingerie, Loungewear, and Nightwear Manufacturing	
		(apparel, such as academic gowns, clerical outerwear, and band uniforms, except contractors)	315299	All Other Cut and Sew Apparel Manufacturing	
		(accessories such as, handkerchiefs, arm bands, cummerbunds, suspenders, etc., except contractors)	315999	Other Apparel Accessories and Other Apparel Manufacturing	
	2391	Curtains and Draperies	314121	Curtain and Drapery Mills	
	2392	Housefurnishings, Except Curtains and Draperies (except mops, dust rags, and bags)	314129	Other Household Textile Product Mills	
		(blanket, laundry, and wardrobe bags)	314911	Textile Bag Mills	
		(dust rags)	314999	All Other Miscellaneous Textile Product Mills	
		(floor and dust mops)	339994	Broom, Brush, and Mop Manufacturing	
	2393	Textile Bags	314911	Textile Bag Mills	
	2394	Canvas and Related Products	314912	Canvas and Related Product Mills	
	2395	Pleating, Decorative and Novelty Stitching, and Tucking for the Trade (except apparel contractors)	314999	All Other Miscellaneous Textile Product Mills	
		(men’s and boy’s apparel contractors)	315211	Men's and Boys' Cut and Sew Apparel Contractors	
		(women’s, girls’, and infants’ apparel contractors)	315212	Women's, Girls', and Infants' Cut and Sew Apparel Contractors	
	2396	Automotive Trimmings, Apparel Findings, and Related Products (textile products except automotive and apparel trimmings and findings, printing or embossing on apparel, and contractors)	314999	All Other Miscellaneous Textile Product Mills	
		(men's and boys' contractors)	315211	Men's and Boys' Cut and Sew Apparel Contractors	
		(women's, girls', and infants' contractors)	315212	Women's, Girls', and Infants' Cut and Sew Apparel Contractors	
		(apparel findings and trimmings, except contractors)	315999	Other Apparel Accessories and Other Apparel Manufacturing	
		(printing and embossing on fabric articles)	323113	Commercial Screen Printing	
		(textile motor vehicle trimming except contractors)	336360	Motor Vehicle Seating and Interior Trim Manufacturing	
	2397	Schiffli Machine Embroideries	313222	Schiffli Machine Embroidery	

Sector V. Textile Mills, Apparel, and Other Fabric Product Manufacturing

Sub-sector	SIC Codes		NAICS Codes		Notes
	2399	Fabricated Textile Products, Not Elsewhere Classified (except apparel and accessories, automotive seat belts, seat and tire covers, and contractors)	**314999**	All Other Miscellaneous Textile Product Mills	
		(men's and boys' contractors)	**315211**	Men's and Boys' Cut and Sew Apparel Contractors	
		(women's, girls', and infants' contractors)	**315212**	Women's, Girls', and Infants' Cut and Sew Apparel Contractors	
		(apparel and apparel accessories, except contractors)	**315999**	Other Apparel Accessories and Other Apparel Manufacturing	
		(seat belts, and seat and tire covers)	**336360**	Motor Vehicle Seating and Interior Trim Manufacturing	
	3131	Boot and Shoe Cut Stock and Findings (except wood heels and metal buckles)	**316999**	All Other Leather Good Manufacturing	
		(heels, boot and shoe, finished wood, manufacturing)	**321999**	All Other Miscellaneous Wood Product Manufacturing	A facility with the primary activity of NAICS 321999 “heels, boot and shoe, finished wood, manufacturing” can be regulated under Sector A or Sector V. Sector A requires additional technology-based effluent limits comprising good housekeeping; additional SWPPP requirements; additional inspection requirements; and benchmark monitoring for COD and TSS. Sector V requires additional technology-based effluent limits comprised of good housekeeping measures and employee training; additional SWPPP requirements; and additional inspection requirements. Regulatory burden would likely be greater under Sector A.

Sector V. Textile Mills, Apparel, and Other Fabric Product Manufacturing

Sub-sector	SIC Codes		NAICS Codes		Notes
		(metal buckles)	**339993**	Fastener, Button, Needle, and Pin Manufacturing	Any facility whose primary activity is manufacturing metal buckles (SIC 3131 / NAICS 339993) should be regulated under Sector Y, but may continue to be regulated under Sector V, or alternatively, under Sector AD. Sector Y does not apply additional sector-specific requirements to metal buckle manufacturers. Sector V applies additional technology-based limitations comprised of good housekeeping measures for material storage areas and employee training. Under Sector AD EPA could establish additional facility-specific monitoring and reporting requirements. Regulatory burden would likely be greater under Sector V.
	3142	House Slippers	**316212**	House Slipper Manufacturing	
	3143	Men's Footwear, Except Athletic	**316213**	Men's Footwear (except Athletic) Manufacturing	
	3144	Women's Footwear, Except Athletic	**316214**	Women's Footwear (except Athletic) Manufacturing	
	3149	Footwear, Except Rubber, Not Elsewhere Classified	**316219**	Other Footwear Manufacturing	
	3151	Leather Gloves and Mittens (men's and boys' contractors)	**315211**	Men's and Boys' Cut and Sew Apparel Contractors	
		(women's, girls', and infants' contractors)	**315212**	Women's, Girls', and Infants' Cut and Sew Apparel Contractors	
		(except contractors)	**315992**	Glove and Mitten Manufacturing	
	3161	Luggage	**316991**	Luggage Manufacturing	
	3171	Women's Handbags and Purses	**316992**	Women's Handbag and Purse Manufacturing	
	3172	Personal Leather Goods, Except Women's Handbags and Purses (except nonprecious metal personal goods, such as card cases, cigar cases, and comb cases)	**316993**	Personal Leather Good (except Women's Handbag and Purse) Manufacturing	

Sector V. Textile Mills, Apparel, and Other Fabric Product Manufacturing

Sub-sector	SIC Codes		NAICS Codes		Notes
		(nonprecious metal personal goods, such as card cases, cigar cases, and comb cases)	**339914**	Costume Jewelry and Novelty Manufacturing	Any facility whose primary activity is manufacturing nonprecious metal personal goods, such as card cases, cigar cases, and comb cases (SIC 3172 / NAICS 339914) should be regulated under Sector Y, but may continue to be regulated under Sector V, or alternatively, under Sector AD. Sector Y does not apply additional sector-specific requirements to metal buckle manufacturers. Sector V applies additional technology-based limitations comprised of good housekeeping measures for material storage areas and employee training. Under Sector AD EPA could establish additional facility-specific monitoring and reporting requirements. Regulatory burden would likely be greater under Sector V.
	3199	Leather Goods, Not Elsewhere Classified	**316999**	All Other Leather Good Manufacturing	

Sector W. Furniture and Fixtures

Sub-sector	SIC Codes		NAICS Codes		Notes
W1	**2434**	Wood Kitchen Cabinets	**337110**	Wood Kitchen Cabinet and Countertop Manufacturing	
	2511	Wood Household Furniture, Except Upholstered (except wood box spring frames)	**337122**	Nonupholstered Wood Household Furniture Manufacturing	
		(wood box spring frames (parts))	**337215**	Showcase, Partition, Shelving, and Locker Manufacturing	
	2512	Wood Household Furniture, Upholstered	**337121**	Upholstered Household Furniture Manufacturing	
	2514	Metal Household Furniture (upholstered)	**337121**	Upholstered Household Furniture Manufacturing	
		(except upholstered metal furniture and metal box spring frames)	**337124**	Metal Household Furniture Manufacturing	

Sector W. Furniture and Fixtures					
Sub-sector	**SIC Codes**		**NAICS Codes**		**Notes**
		(metal box spring frames)	**337215**	Showcase, Partition, Shelving, and Locker Manufacturing	
	2515	Mattresses, Foundations, and Convertible Beds			
		(convertible beds)	**337121**	Upholstered Household Furniture Manufacturing	
		(mattresses and foundations)	**337910**	Mattress Manufacturing	
	2517	Wood, Television, Radio, Phonograph, and Sewing Machine Cabinets	**337129**	Wood, Television, Radio, Phonograph, and Sewing Machine Cabinet Manufacturing	
	2519	Household Furniture, Not Elsewhere Classified	**337125**	Household Furniture (except Wood and Metal) Manufacturing	
	2521	Wood Office Furniture	**337211**	Wood Office Furniture Manufacturing	
	2522	Office Furniture, Except Wood	**337214**	Office Furniture (Except Wood) Manufacturing	
	2531	Public Building and Related Furniture			
		(seats for motor vehicles)	**336360**	Motor Vehicle Seating and Interior Trim Manufacturing	
		(except motor vehicle seats and blackboards)	**337127**	Institutional Furniture Manufacturing	
		(blackboards)	**339942**	Lead Pencil and Art Good Manufacturing	
	2541	Wood Office and Store Fixtures, Partitions, Shelving, and Lockers			
		(counter tops)	**337110**	Wood Kitchen Cabinet and Countertop Manufacturing	
		(wood lunchroom tables and chairs)	**337127**	Institutional Furniture Manufacturing	
		(custom architectural millwork)	**337212**	Custom Architectural Woodwork and Millwork Manufacturing	
		(except custom architectural millwork, counter tops, and lunchroom tables and chairs)	**337215**	Showcase, Partition, Shelving, and Locker Manufacturing	
	2542	Office and Store Fixtures, Partitions, Shelving, and Lockers, Except Wood			
		(lunchroom tables and chairs)	**337127**	Institutional Furniture Manufacturing	
		(except lunchroom tables and chairs)	**337215**	Showcase, Partition, Shelving, and Locker Manufacturing	
	2591	Drapery Hardware and Window Blinds and Shades	**337920**	Blind and Shade Manufacturing	
	2599	Furniture and Fixtures, Not Elsewhere Classified			
		(except hospital beds)	**337127**	Institutional Furniture Manufacturing	
		(hospital beds)	**339111**	Laboratory Apparatus and Furniture Manufacturing	

Sector X. Printing and Publishing

Sub-sector	SIC Codes		NAICS Codes		Notes
X1	2711	Newspapers: Publishing, or Publishing and Printing (except Internet newspaper publishing)	511110	Newspaper Publishers	
	2721	Periodicals: Publishing, or Publishing and Printing (except Internet periodical publishing)	511120	Periodical Publishers	
	2731	Books: Publishing, or Publishing and Printing (except Internet book publishing)			
		(except music books)	511130	Book Publishers	
		(music books)	512230	Music Publishers	
	2732	Book Printing	323117	Book Printing	
	2741	Miscellaneous Publishing (except Internet publishers)			
		(shopping news and advertising periodical publishing or publishing and printing except Internet)	511120	Periodical Publishers	
		(technical manuals and books publishing or publishing and printing, except Internet)	511130	Book Publishers	
		(directory publishers, except Internet publishers)	511140	Directory and Mailing List Publishers	
		(except database, advertising periodicals, shopping news, technical manuals and books, and sheet music publishing or publishing and printing)	511199	All Other Publishers	
		(sheet music publishing or publishing and printing)	512230	Music Publishers	
	2752	Commercial Printing, Lithographic			
		(except quick printing)	323110	Commercial Lithographic Printing	
		(quick printing)	323114	Quick Printing	
	2754	Commercial Printing, Gravure	323111	Commercial Gravure Printing	
	2759	Commercial Printing, NEC			
		(flexographic printing)	323112	Commercial Flexographic Printing	
		(screen printing)	323113	Commercial Screen Printing	
		(digital printing, except quick printing)	323115	Digital Printing	
		(other commercial printing except flexographic, screen, digital, and quick printing)	323119	Other Commercial Printing	
	2761	Manifold Business Forms			

Sector X. Printing and Publishing

Sub-sector	SIC Codes		NAICS Codes		Notes
	2771	Greeting Cards (except Internet greeting card publishers)			
		(lithographic printing of greeting cards)	**323110**	Commercial Lithographic Printing	
		(gravure printing of greeting cards)	**323111**	Commercial Gravure Printing	
		(flexographic printing of greeting cards)	**323112**	Commercial Flexographic Printing	
		(screen printing of greeting cards)	**323113**	Commercial Screen Printing	
		(other printing of greeting cards)	**323119**	Other Commercial Printing	
		(publishing greeting cards)	**511191**	Greeting Card Publishers	
	2782	Blankbooks, Looseleaf Binders and Devices			
		(checkbooks)	**323116**	Manifold Business Form Printing	
		(except checkbooks)	**323118**	Blankbook, Loose-leaf Binder, and Device Manufacturing	
	2789	Bookbinding and Related Work	**323121**	Tradebinding and Related Work	
	2791	Typesetting	**323122**	Prepress Services	
	2796	Platemaking and Related Services	**323122**	Prepress Services	

Sector Y. Rubber, Miscellaneous Plastic Products, and Miscellaneous Manufacturing Industries

Sub-sector	SIC Codes		NAICS Codes		Notes
Y1	**3011**	Tires and Inner Tubes	**326211**	Tire Manufacturing (except Retreading)	
	3021	Rubber and Plastics Footwear	**316211**	Rubber and Plastics Footwear Manufacturing	
	3052	Rubber and Plastics Hose and Belting	**326220**	Rubber and Plastics Hoses and Belting Manufacturing	
	3053	Gaskets, Packing, and Sealing Devices	**339991**	Gaskets, Packing, and Sealing Device Manufacturing	
	3061	Molded, Extruded, and Lathe-Cut Mechanical Rubber Goods	**326291**	Rubber Product Manufacturing for Mechanical Use	
	3069	Fabricated Rubber Products, Not Elsewhere Classified			
		(rubberizing fabric or purchased textile products)	**313320**	Fabric Coating Mills	
		(bags made from rubberized fabric)	**314911**	Textile Bag Mills	
		(rubber cut and sew outerwear)	**315299**	All Other Cut and Sew Apparel Manufacturing	

Sector Y. Rubber, Miscellaneous Plastic Products, and Miscellaneous Manufacturing Industries

Sub-sector	SIC Codes		NAICS Codes		Notes
		(bibs, bathing caps, related rubber accessories)	**315999**	Other Apparel Accessories and Other Apparel Manufacturing	
		(rubber resilient floor coverings)	**326192**	Resilient Floor Covering Manufacturing	
		(except rubberized fabric and garments, gloves, life vests, wet suits, accessories, such as bibs and bathing caps, rubber toys, bags made from rubberized fabric, rubber diaper covers, and rubber resilient floor coverings)	**326299**	All Other Rubber Product Manufacturing	
		(rubber gloves, inflatable rubber life jackets)	**339113**	Surgical and Appliance and Supplies Manufacturing	
		(wet suits)	**339920**	Sporting and Athletic Goods Manufacturing	
		(rubber toys, except dolls)	**339932**	Game, Toy, and Children's Vehicle Manufacturing	
Y2	**3081**	Unsupported Plastics Film and Sheet	**326113**	Unlaminated Plastics Film and Sheet (except Packaging) Manufacturing	
	3082	Unsupported Plastics Profile Shapes	**326121**	Unlaminated Plastics Profile Shape Manufacturing	
	3083	Laminated Plastics Plate, Sheet, and Profile Shapes	**326130**	Laminated Plastics Plate, Sheet (except Packaging), and Shape Manufacturing	
	3084	Plastics Pipe	**326122**	Plastics Pipe and Pipe Fitting Manufacturing	
	3085	Plastics Bottles	**326160**	Plastics Bottle Manufacturing	
	3086	Plastics Foam Products			
		(polystyrene foam products)	**326140**	Polystyrene Foam Product Manufacturing	
		(except polystyrene foam products)	**326150**	Urethane and Other Foam Product (except Polystyrene) Manufacturing	
	3087	Custom Compounding of Purchased Plastics Resins	**325991**	Custom Compounding of Purchased Resins	
	3088	Plastics Plumbing Fixtures	**326191**	Plastics Plumbing Fixture Manufacturing	
	3089	Plastics Products, Not Elsewhere Classified			
		(plastics sausage casings)	**326121**	Unlaminated Plastics Profile Shape Manufacturing	
		(pipe fittings)	**326122**	Plastics Pipe and Pipe Fitting Manufacturing	
		(except plastics pipe fittings, inflatable plastics life jackets, plastics furniture parts, and plastics sausage casings)	**326199**	All Other Plastics Product Manufacturing	
		(finished plastic furniture parts)	**337215**	Showcase, Partition, Shelving, and Locker Manufacturing	

Sector Y. Rubber, Miscellaneous Plastic Products, and Miscellaneous Manufacturing Industries

Sub-sector	SIC Codes		NAICS Codes		Notes
		(inflatable plastic life jackets)	**339113**	Surgical Appliance and Supplies Manufacturing	
	3931	Musical Instruments	**339992**	Musical Instrument Manufacturing	
	3942	Dolls and Stuffed Toys	**339931**	Doll and Stuffed Toy Manufacturing	
	3944	Games, Toys, and Children's Vehicles, Except Dolls and Bicycles (metal tricycles)	**336991**	Motorcycle, Bicycle, and Parts Manufacturing	Any facility whose primary activity is manufacturing metal tricycles (SIC 3944 / NAICS 336991) should be regulated under Sector AB, but may continue to be regulated under Sector Y, or alternatively, under Sector AD. Sector AB applies additional SWPPP requirements. Sector Y does not apply additional sector-specific requirements to metal tricycle manufacturers and under Sector AD EPA could establish additional facility-specific monitoring and reporting requirements. Regulatory burden would be greater under Sector AB.
		(except metal tricycles)	**339932**	Game, Toy, and Children's Vehicle Manufacturing	
	3949	Sporting and Athletic Goods, Not Elsewhere Classified	**339920**	Sporting and Athletic Goods Manufacturing	
	3951	Pens, Mechanical Pencils, and Parts	**339941**	Pens, Mechanical Pencil Manufacturing	
	3953	Marking Devices	**339943**	Marking Device Manufacturing	
	3955	Carbon Paper and Inked Ribbons	**339944**	Carbon Paper and Inked Ribbon Manufacturing	
	3961	Costume Jewelry and Costume Novelties, Except Precious Metal (except cuff links)	**339914**	Costume Jewelry and Novelty Manufacturing	
		(nonprecious cuff links)	**339993**	Fastener, Button, Needle, and Pin Manufacturing	
	3965	Fasteners, Buttons, Needles, and Pins	**339993**	Fastener, Button, Needle, and Pin Manufacturing	
	3991	Brooms and Brushes	**339994**	Broom, Brush, and Mop Manufacturing	

Sector Y. Rubber, Miscellaneous Plastic Products, and Miscellaneous Manufacturing Industries

Sub-sector	SIC Codes		NAICS Codes		Notes
	3993	Signs and Advertising Specialties			
		(screen printing purchased advertising specialties[34])	**323113**	Commercial Screen Printing	Any facility whose primary activity is screen printing purchased advertising specialties (SIC 3993 / NAICS 323113) should be regulated under Sector X, but may continue to be regulated under Sector Y, or alternatively, under Sector AD. Sector X applies additional technology-based effluent limits comprised of good housekeeping measures for material storage areas, and additional SWPPP requirements. Sector Y does not apply additional requirements to these facilities and under Sector AD EPA could establish additional facility-specific monitoring and reporting requirements. Regulatory burden would be greater under Sector X.
		(signs)	**339950**	Sign Manufacturing	
	3995	Burial Caskets	**339995**	Burial Casket Manufacturing	
	3996	Linoleum, Asphalted-Felt-Base, and Other Hard Surface Floor Coverings, Not Elsewhere Classified	**326192**	Resilient Floor Covering Manufacturing	

Sector Y. Rubber, Miscellaneous Plastic Products, and Miscellaneous Manufacturing Industries

Sub-sector	SIC Codes		NAICS Codes		Notes
	3999	Manufacturing Industries, Not Elsewhere Classified (fur dressing and finishing)	**316110**	Leather and Hide Tanning and Finishing	Any facility whose primary activity is fur dressing and finishing (SIC 3999 / NAICS 316110) should be regulated under Sector Z, but may continue to be regulated under Sector Y, or alternatively, under Sector AD. Sector Z applies additional technology-based effluent limits comprised of good housekeeping measures for material storage areas and handling areas, and additional SWPPP requirements. Sector Y does not apply additional requirements to these facilities and under Sector AD EPA could establish additional facility-specific monitoring and reporting requirements. Regulatory burden would be greater under Sector Z.
		(burnt wood articles)	**321999**	All Other Miscellaneous Wood Product Manufacturing	Any facility whose primary activity is burnt wood articles (SIC 3999 / NAICS 321999) should be regulated under Sector A, but may continue to be regulated under Sector Y, or alternatively, under Sector AD. Sector A applies additional technology-based effluent limits comprised of good housekeeping measures, additional SWPPP requirements, and benchmark monitoring for COD and TSS. Sector Y does not apply additional requirements to these facilities and under Sector AD EPA could establish additional facility- specific monitoring and reporting requirements. Regulatory burden would be greater under Sector A.

Sector Y. Rubber, Miscellaneous Plastic Products, and Miscellaneous Manufacturing Industries

Sub-sector	SIC Codes		NAICS Codes		Notes
		(matches and match books manufacturing)	**325998**	All Other Miscellaneous Chemical Product and Preparation Manufacturing	Any facility whose primary activity is matches and match books manufacturing (SIC 3999 / NAICS 325998) should be regulated under Sector C, but may continue to be regulated under Sector Y, or alternatively, under Sector AD. Sectors C and Y do not require additional sector-specific requirements. EPA could establish additional facility-specific monitoring and reporting requirements under Sector AD. Regulatory burden is not expected to differ between Sectors C and Y.
		(plastics products such as combs, hair curlers, etc.)	**326199**	All Other Plastics Product Manufacturing	
		(hand operated hair clippers for humans)	**332211**	Cutlery and Flatware (except Precious) Manufacturing	Any facility whose primary activity is manufacturing hand operated hair clippers for humans (SIC 3999 / NAICS 332211) should be regulated under Sector AA, but may continue to be regulated under Sector Y, or alternatively, under Sector AD. Sector AA applies additional technology- based effluent limits comprised of good housekeeping measures, spill prevention and response procedures, and spills and leaks; additional SWPPP requirements; and additional inspection requirements. Sector Y does not require additional sector- specific requirements. EPA could establish additional facility-specific monitoring and reporting requirements under Sector AD. Regulatory burden would be greater under Sector AA.

Sector Y. Rubber, Miscellaneous Plastic Products, and Miscellaneous Manufacturing Industries

Sub-sector	SIC Codes		NAICS Codes		Notes
		(tape measures)	**332212**	Hand and Edge Tool Manufacturing	Any facility whose primary activity is manufacturing tape measures (SIC 3999 / NAICS 332212) should be regulated under Sector AA, but may continue to be regulated under Sector Y, or alternatively, under Sector AD. Sector AA applies additional technology-based effluent limits comprised of good housekeeping measures, spill prevention and response procedures, and spills and leaks; additional SWPPP requirements; and additional inspection requirements. Sector Y does not require additional sector- specific requirements. EPA could establish additional facility-specific monitoring and reporting requirements under Sector AD. Regulatory burden would be greater under Sector AA.
		(flocking metal products for the trade)	**332812**	Metal Coating, Engraving (except Jewelry and Silverware), and Allied Services to Manufacturers	Any facility whose primary activity is manufacturing flocking metal products for the trade (SIC 3999 / NAICS 332812) should be regulated under Sector AA, but may continue to be regulated under Sector Y, or alternatively, under Sector AD. Sector AA applies additional technology- based effluent limits comprised of good housekeeping measures, spill prevention and response procedures, and spills and leaks; additional SWPPP requirements; and additional inspection requirements. Sector Y does not require additional sector- specific requirements. EPA could establish additional facility-specific monitoring and reporting requirements under Sector AD. Regulatory burden would be greater under Sector AA.

Sector Y. Rubber, Miscellaneous Plastic Products, and Miscellaneous Manufacturing Industries

Sub-sector	SIC Codes		NAICS Codes		Notes
		(other miscellaneous metal products, such as combs, hair curlers, etc.)	**332999**	All Other Miscellaneous Fabricated Metal Product Manufacturing	Any facility whose primary activity is manufacturing other miscellaneous metal products, such as combs, hair curlers, etc. (SIC 3999 / NAICS 332999) should be regulated under Sector AA, but may continue to be regulated under Sector Y, or alternatively, under Sector AD. Sector
					AA applies additional technology- based effluent limits comprised of good housekeeping measures, spill prevention and response procedures, and spills and leaks; additional SWPPP requirements; and additional inspection requirements. Sector Y does not require additional sector- specific requirements. EPA could establish additional facility-specific monitoring and reporting requirements under Sector AD. Regulatory burden would be greater under Sector AA.
		(beauty and barber shop equipment, except chairs)	**333319**	Other Commercial and Service Industry Machinery Manufacturing	
		(lamp shades of paper or textile)	**335121**	Residential Electric Lighting Fixture Manufacturing	
		(electric hair clippers for humans)	**335211**	Electric Housewares and Household Fan Manufacturing	Any facility whose primary activity is manufacturing electric hair clippers for humans (SIC 3999 / NAICS 335211) should be regulated under Sector AC, but may continue to be regulated under Sector Y, or alternatively, under Sector AD. Sectors Y and AC do not apply sector-specific requirements to facilities manufacturing electric hair clippers for humans. EPA may establish facility-specific monitoring and reporting requirements under Sector AD. Regulatory burden is not expected to differ between Sectors Y and AC.

Sector Y. Rubber, Miscellaneous Plastic Products, and Miscellaneous Manufacturing Industries

Sub-sector	SIC Codes		NAICS Codes		Notes
		(beauty and barber chairs)	**337127**	Institutional Furniture Manufacturing	Any facility whose primary activity is manufacturing beauty and barber chairs (SIC 3999 / NAICS 337127) should be regulated under Sector W, but may continue to be regulated under Sector Y, or alternatively, under Sector AD. Sector W applies additional SWPPP requirements to facilities manufacturing beauty and barber chairs. Sector Y applies no additional requirements and under Sector AD EPA could establish additional facility-specific monitoring and reporting requirements. Regulatory burden would be greater under Sector W.
		(embroidery kits)	**339932**	Game, Toy, and Children's Vehicle Manufacturing	
		(other miscellaneous products not specially provided for previously)	**339999**	All Other Miscellaneous Manufacturing	

Sector Z. Leather Tanning and Finishing

Sub-sector	SIC Codes		NAICS Codes		Notes
Z1	**3111**	Leather Tanning and Finishing	**316110**	Leather and Hide Tanning and Finishing	

Sector AA. Fabricated Metal Products

Sub-sector	SIC Codes		NAICS Codes		Notes
AA1	**3411**	Metal Cans	**332431**	Metal Can Manufacturing	
	3412	Metal Shipping Barrels, Drums, Kegs, and Pails	**332439**	Other Metal Container Manufacturing	
	3421	Cutlery (except hedge shears and trimmers, tinners' snips, and similar nonelectric hand tools)	**332211**	Cutlery and Flatware (except Precious) Manufacturing	
		(hedge shears and trimmers, tinners snips, and similar nonelectric hand tools)	**332212**	Hand and Edge Tool Manufacturing	
	3423	Hand and Edge Tools, Except Machine Tools and Handsaws	**332212**	Hand and Edge Tool Manufacturing	
	3425	Saw Blades and Handsaws	**332213**	Saw Blade and Handsaw Manufacturing	
	3429	Hardware, Not Elsewhere Classified (vacuum and insulated bottles, jugs, and chests)	**332439**	Other Metal Container Manufacturing	
		(except fire hose nozzles, hose couplings, vacuum and insulated bottles, jugs and chests, fireplace fixtures, time locks, turnbuckles, pulleys, tackle blocks, luggage and utility racks, sleep sofa mechanisms and chair glides, traps, handcuffs and leg irons, ladder jacks, and other like metal products)	**332510**	Hardware Manufacturing	
		(turnbuckles and hose clamps)	**332722**	Bolt, Nut, Screw, Rivet, and Washer Manufacturing	
		(fire hose nozzles and hose couplings)	**332919**	Other Metal Valve and Pipe Fitting Manufacturing	
		(fireplace fixtures, traps, handcuffs and leg irons, ladder jacks, and other like metal products)	**332999**	All Other Miscellaneous Fabricated Metal Product Manufacturing	
		(pulleys, tackle blocks, block and tackle assemblies)	**333923**	Overhead Traveling Crane, Hoist, and Monorail System Manufacturing	
		(time locks)	**334518**	Watch, Clock, and Part Manufacturing	
		(luggage and utility racks)	**336399**	All Other Motor Vehicle Parts Manufacturing	
		(sleep sofa mechanisms and chair glides)	**337215**	Showcase, Partition, Shelving, and Locker Manufacturing	
	3431	Enameled Iron and Metal Sanitary Ware	**332998**	Enameled Iron and Metal Sanitary Ware Manufacturing	
	3432	Plumbing Fixture Fittings and Trim			

Sector AA. Fabricated Metal Products

Sub-sector	SIC Codes		NAICS Codes		Notes
		(except shower rods, lawn hose nozzles, and lawn sprinklers)	**332913**	Plumbing Fixture Fitting and Trim Manufacturing	
		(lawn hose nozzles and lawn sprinklers)	**332919**	Other Metal Valve and Pipe Fitting Manufacturing	
		(metal shower rods)	**332999**	All Other Miscellaneous Fabricated Metal Product Manufacturing	
	3442	Metal Doors, Sash, Frames, Molding, and Trim Manufacturing			
	3443	Fabricated Plate Work (Boiler Shops) (fabricated plate work and metal weldments)	**332313**	Plate Work Manufacturing	
		(power boilers and heat exchangers)	**332410**	Power Boiler and Heat Exchanger Manufacturing	
		(heavy gauge tanks)	**332420**	Metal Tank (Heavy Gauge) Manufacturing	
		(metal cooling towers)	**333415**	Air-Conditioning and Warm Air Heating Equipment and Commercial and Industrial Refrigeration Equipment Manufacturing (metal cooling towers)	
	3444	Sheet Metal Work (stamped metal skylights)	**332321**	Metal Window and Door Manufacturing	
		(except sheet metal bins and vats, skylights, and sheet metal cooling towers)	**332322**	Sheet Metal Work Manufacturing	
		(metal bins and vats)	**332439**	Other Metal Container Manufacturing	
		(cooling towers, sheet metal)	**333415**	Air-Conditioning and Warm Air Heating Equipment and Commercial and Industrial Refrigeration Equipment Manufacturing	
	3446	Architectural and Ornamental Ironwork	**332323**	Ornamental and Architectural Metal Work Manufacturing	
	3448	Prefabricated Metal Buildings and Components	**332311**	Prefabricated Metal Building and Component Manufacturing	
	3449	Miscellaneous Structural Metal Work (custom roll forming)	**332114**	Custom Roll Forming	
		(fabricated bar joists and concrete reinforcing bars)	**332312**	Fabricated Structural Metal Manufacturing	
		(curtain wall and metal plaster bases and lath)	**332323**	Ornamental and Architectural Metal Work Manufacturing	
	3451	Screw Machine Products	**332721**	Precision Turned Product Manufacturing	
	3452	Bolts, Nuts, Screws, Rivets, and Washers	**332722**	Bolt, Nut, Screw, Rivet, and Washer Manufacturing	
	3462	Iron and Steel Forgings	**332111**	Iron and Steel Forging	
	3463	Nonferrous Forgings	**332112**	Nonferrous Forging	

Sector AA. Fabricated Metal Products

Sub-sector	SIC Codes		NAICS Codes		Notes
	3465	Automotive Stampings	**336370**	Motor Vehicle Metal Stamping	
	3466	Crowns and Closures	**332115**	Crown and Closure Manufacturing	
	3469	Metal Stampings, Not Elsewhere Classified (except kitchen utensils, pots and pans for cooking, coins, and stamped metal boxes)	**332116**	Metal Stamping	
		(kitchen utensils, pots, and pans for cooking)	**332214**	Kitchen Utensil, Pot, and Pan Manufacturing	
		(stamped metal tool, cash, mail, and lunch boxes)	**332439**	Other Metal Container Manufacturing	
	3471	Electroplating, Plating, Polishing, Anodizing, and Coloring	**332813**	Electroplating, Plating, Polishing, Anodizing, and Coloring	
AA2	**3479**	Coating, Engraving, and Allied Services, Not Elsewhere Classified (except jewelry, silverware, and flatware engraving and etching)	**332812**	Metal Coating, Engraving (except Jewelry and Silverware), and Allied Services to Manufacturers	
		(precious metal jewelry engraving and etching)	**339911**	Jewelry (except Costume) Manufacturing	
		(silver and plated ware engraving and etching)	**339912**	Silverware and Holloware Manufacturing	
		(costume jewelry engraving and etching)	**339914**	Costume Jewelry and Novelty Manufacturing	
AA1	**3482**	Small Arms Ammunition	**332992**	Small Arms Ammunition Manufacturing	
	3483	Ammunition, Except for Small Arms	**332993**	Ammunition (except for Small Arms) Manufacturing	
	3484	Small Arms	**332994**	Small Arms Manufacturing	

Sector AA. Fabricated Metal Products

Sub-sector	SIC Codes		NAICS Codes		Notes
	3489	Ordinance and Accessories, Not Elsewhere Classified	**332995**	Other Ordinance and Accessories Manufacturing	
	3491	Industrial Valves	**332911**	Industrial Valve Manufacturing	
	3492	Fluid Power Valves and Hose Fittings	**332912**	Fluid Power Valve and Hose Fitting Manufacturing	
	3493	Steel Springs, Except Wire	**332611**	Spring (Heavy Gauge) Manufacturing	
	3494	Valves and Pipe Fittings, Not Elsewhere Classified (except metal pipe hangers and supports)	**332919**	Other Metal Valve and Pipe Fitting Manufacturing	
		(metal pipe hangers and supports)	**332999**	All Other Miscellaneous Fabricated Metal Product Manufacturing	
	3495	Wire Springs (except watch and clock springs)	**332612**	Spring (Light Gauge) Manufacturing	
		(clock and watch springs)	**334518**	Watch, Clock, and Part Manufacturing	
	3496	Miscellaneous Fabricated Wire Products (potato mashers)	**332214**	Kitchen Utensil, Pot, and Pan Manufacturing	
		(except shopping carts and potato mashers)	**332618**	Other Fabricated Wire Product Manufacturing	
		(shopping carts made from purchased wire)	**333924**	Industrial Truck, Tractor, Trailer, and Stacker Machinery Manufacturing	
	3497	Metal Foil and Leaf (laminated aluminum foil rolls and sheets for flexible packaging uses)	**322225**	Laminated Aluminum Foil Manufacturing for Flexible Packaging Uses	
		(foil and foil containers)	**332999**	All Other Miscellaneous Fabricated Metal Product Manufacturing	
	3498	Fabricated Pipe and Pipe Fittings	**332996**	Fabricated Pipe and Pipe Fitting Manufacturing	
	3499	Fabricated Metal Products, Not Elsewhere Classified (powder metallurgy)	**332117**	Powder Metallurgy Part Manufacturing	
		(metal boxes)	**332439**	Other Metal Container Manufacturing	
		(safe and vault locks)	**332510**	Hardware Manufacturing	
		(metal aerosol valves)	**332919**	Other Metal Valve and Pipe Fitting Manufacturing	
		(other metal products)	**332999**	All Other Miscellaneous Fabricated Metal Product Manufacturing	
		(metal automobile seat frames)	**336360**	Motor Vehicle Seating and Interior Trim Manufacturing	
		(metal furniture frames)	**337215**	Showcase, Partition, Shelving, and Locker Manufacturing	
	3911	Jewelry, Precious Metal	**339911**	Jewelry (except Costume) Manufacturing	

Sector AA. Fabricated Metal Products					
Sub-sector	**SIC Codes**		**NAICS Codes**		**Notes**
	3914	Silverware, Plated Ware, and Stainless Steel Ware (cutlery and flatware, nonprecious and precious plated)	**332211**	Cutlery and Flatware (except Precious) Manufacturing	
		(precious metal plated hollowware)	**332999**	All Other Miscellaneous Fabricated Metal Product Manufacturing	
		(except nonprecious and precious plated metal cutlery, flatware, and hollowware)	**339912**	Silverware and Holloware Manufacturing	
	3915	Jewelers Findings and Materials and Lapidary Work (watch jewels)	**334518**	Watch, Clock, and Part Manufacturing	Any facility whose primary activity is manufacturing watch jewels (SIC 3915 / NAICS 334518) should be regulated under Sector AC, but may continue to be regulated under Sector AA, or alternatively, under Sector AD. Sector AA applies additional technology- based effluent limits comprising good housekeeping measures, spill prevention and response, and spills and leaks; additional SWPPP requirements; and additional inspection requirements. Sector AC does not apply additional sector- specific requirements and EPA may establish facility-specific monitoring and reporting requirements under Sector AD. Regulatory burden would be greater under Sector AA.
		(except watch jewels)	**339913**	Jewelers' Material and Lapidary Work Manufacturing	

Sector AB. Transportation Equipment, Industrial or Commercial Machinery

Sub-sector	SIC Codes		NAICS Codes		Notes
AB1	**3511**	Steam, Gas, and Hydraulic Turbines, and Turbine Generator Set Units	**333611**	Turbine and Turbine Generator Set Units Manufacturing	
	3519	Internal Combustion Engines, Not Elsewhere Classified (except stationary engine radiators)	**333618**	Other Engine Equipment Manufacturing	
		(stationary engine radiators)	**336399**	All Other Motor Vehicle Parts Manufacturing	
	3523	Farm Machinery and Equipment (hand hair clippers for animals)	**332212**	Hand and Edge Tool Manufacturing	
		(corrals, stalls, and holding gates)	**332323**	Ornamental and Architectural Metal Work Manufacturing	
		(except corrals, stalls, holding gates, hand clippers for animals, and farm conveyors/elevators)	**333111**	Farm Machinery and Equipment Manufacturing	
		(farm conveyors and elevators)	**333922**	Conveyor and Conveying Equipment Manufacturing	
	3524	Lawn and Garden Tractors and Home Lawn and Garden Equipment (nonpowered lawnmowers)	**332212**	Hand and Edge Tool Manufacturing	
		(except nonpowered lawnmowers)	**333112**	Lawn and Garden Tractor and Home Lawn and Garden Equipment Manufacturing	
	3531	Construction Machinery and Equipment (except railway track maintenance equipment; winches, aerial work platforms; and automotive wrecker hoists)	**333120**	Construction Machinery Manufacturing	
		(winches, aerial work platforms, automobile wrecker hoists, locomotive cranes, and ship cranes)	**333923**	Overhead Traveling Crane, Hoist, and Monorail System Manufacturing	
		(railway track maintenance equipment)	**336510**	Railroad Rolling Stock Manufacturing	
	3532	Mining Machinery and Equipment, Except Oil and Gas Field Machinery and Equipment	**333131**	Mining Machinery and Equipment Manufacturing	
	3533	Oil and Gas Field Machinery and Equipment	**333132**	Oil and Gas Field Machinery and Equipment Manufacturing	
	3534	Elevators and Moving Stairways	**333921**	Elevators and Moving Stairway Manufacturing	
	3535	Conveyors and Conveying Equipment	**333922**	Conveyors and Conveying Equipment Manufacturing	
	3536	Overhead Traveling Cranes, Hoists, and Monorail Systems	**333923**	Overhead Traveling Cranes, Hoists, and Monorail System Manufacturing	

Sector AB. Transportation Equipment, Industrial or Commercial Machinery

Sub-sector	SIC Codes		NAICS Codes		Notes
	3537	Industrial Trucks, Tractors, Trailers, and Stackers (metal air cargo containers)	**332439**	Other Metal Container Manufacturing	
		(metal pallets)	**332999**	All Other Miscellaneous Fabricated Metal Product Manufacturing	
		(except metal pallets and metal air cargo containers)	**333924**	Industrial Truck, Tractor, Trailer, and Stacker Machinery Manufacturing	
	3541	Machine Tools, Metal Cutting Types	**333512**	Machine Tool (Metal Cutting Types) Manufacturing	
	3542	Machine Tools, Metal Forming Types	**333513**	Machine Tool (Metal Forming Types) Manufacturing	
	3543	Industrial Patterns	**332997**	Industrial Pattern Manufacturing	
	3544	Special Dies and Tools, Die Sets, Jigs and Fixtures, and Industrial Molds (industrial molds)	**333511**	Industrial Mold Manufacturing	
		(except molds)	**333514**	Special Die and Tool, Die Set, Jig, and Fixture Manufacturing	
	3545	Cutting Tools, Machine Tool Accessories, and Machinist Precision Measuring Devices (precision measuring devices)	**332212**	Hand and Edge Tool Manufacturing	
		(except precision measuring devices)	**333515**	Cutting Tool and Machine Tool Accessory Manufacturing	
	3546	Power-Driven Handtools	**333991**	Power-Driven Handtool Manufacturing	
	3547	Rolling Mill Machinery and Equipment	**333516**	Rolling Mill Machinery and Equipment Manufacturing	
	3548	Electric and Gas Welding and Soldering Equipment (except transformers for arc-welding)	**333992**	Welding and Soldering Equipment Manufacturing	
		(transformers for arc-welders)	**335311**	Power, Distribution, and Specialty Transformer Manufacturing	
	3549	Metalworking Machinery, Not Elsewhere Classified	**333518**	Other Metalworking Machinery Manufacturing	
	3552	Textile Machinery	**333292**	Textile Machinery Manufacturing	
	3553	Woodworking Machinery	**333210**	Sawmill and Woodworking Machinery Manufacturing	
	3554	Paper Industries Machinery	**333291**	Paper Industry Machinery Manufacturing	
	3555	Printing Trades Machinery and Equipment	**333293**	Printing Machinery and Equipment Manufacturing	
	3556	Food Products Machinery	**333294**	Food Product Machinery Manufacturing	

Sector AB. Transportation Equipment, Industrial or Commercial Machinery

Sub-sector	SIC Codes		NAICS Codes		Notes
	3559	Special Industry Machinery, Not Elsewhere Classified (nuclear control rod drive mechanisms)	**332410**	Power Boiler and Heat Exchanger Manufacturing	
		(cotton ginning machinery)	**333111**	Farm Machinery and Equipment Manufacturing	
		(rubber and plastics manufacturing machinery)	**333220**	Plastics and Rubber Industry Machinery Manufacturing	
		(semiconductor machinery manufacturing)	**333295**	Semiconductor Machinery Manufacturing	
		(except rubber and plastics manufacturing machinery, semiconductor manufacturing machinery, and automotive maintenance equipment)	**333298**	All Other Industrial Machinery Manufacturing	
		(automotive maintenance equipment)	**333319**	Other Commercial and Service Industry Machinery Manufacturing	
	3561	Pumps and Pumping Equipment	**333911**	Pump and Pumping Equipment Manufacturing	
	3562	Ball and Roller Bearings	**332991**	Ball and Roller Bearing Manufacturing	
	3563	Air and Gas Compressors	**333912**	Air and Gas Compressor Manufacturing	
	3564	Industrial and Commercial Fans and Blowers and Air Purification Equipment (air purification equipment)	**333411**	Air Purification Equipment Manufacturing	
		(fans and blowers)	**333412**	Industrial and Commercial Fan and Blower Manufacturing	
	3565	Packaging Machinery	**333993**	Packaging Machinery Manufacturing	
	3566	Speed Changers, Industrial High-Speed Drives, and Gears	**333612**	Speed Changer, Industrial High-Speed Drives, and Gear Manufacturing	
	3567	Industrial Process Furnaces and Ovens	**333994**	Industrial Process Furnace and Oven Manufacturing	
	3568	Mechanical Power Transmission Equipment, Not Elsewhere Classified	**333613**	Mechanical Power Transmission Equipment Manufacturing	
	3569	General Industrial Machinery and Equipment, Not Elsewhere Classified (textile fire hose)	**314999**	All Other Miscellaneous Textile Product Mills	
		(electric swimming pool heaters)	**333414**	Heating Equipment (except Warm Air Furnaces) Manufacturing	
		(except fire hoses and electric swimming pool heaters)	**333999**	All Other Miscellaneous General Purpose Machinery Manufacturing	
	3581	Automatic Vending Machines	**333311**	Automatic Vending Machine Manufacturing	
	3582	Commercial Laundry, Drycleaning, and Pressing Machines	**333312**	Commercial Laundry, Drycleaning, and Pressing Machine Manufacturing	

Sector AB. Transportation Equipment, Industrial or Commercial Machinery

Sub-sector	SIC Codes		NAICS Codes		Notes
	3585	Air-Conditioning and Warm Air Heating Equipment and Commercial and Industrial Refrigeration Equipment (except motor vehicle air-conditioning)	**333415**	Air-Conditioning and Warm Air Heating Equipment and Commercial and Industrial Refrigeration Equipment Manufacturing	
		(motor vehicle air-conditioning)	**336391**	Motor Vehicle Air-Conditioning Manufacturing	
	3586	Measuring and Dispensing Pumps	**333913**	Measuring and Dispensing Pump Manufacturing	
	3589	Service Industry Machinery, Not Elsewhere Classified	**333319**	Other Commercial and Service Industry Machinery Manufacturing	
	3592	Carburetors, Pistons, Piston Rings, and Valves	**336311**	Carburetor, Piston, Piston Ring, and Valve Manufacturing	
	3593	Fluid Power Cylinders and Actuators	**333995**	Fluid Power Cylinder and Actuator Manufacturing	
	3594	Fluid Power Pumps and Motors	**333996**	Fluid Power Pumps and Motors Manufacturing	
	3596	Scales and Balances, Except Laboratory	**333997**	Scale and Balance (except Laboratory) Manufacturing	
	3599	Industrial and Commercial Machinery and Equipment, Not Elsewhere Classified (machine shops)	**332710**	Machine Shops	
		(grinding castings for the trade)	**332813**	Electroplating, Plating, Polishing, Anodizing and Coloring	
		(flexible metal hose)	**332999**	All Other Miscellaneous Fabricated Metal Product Manufacturing	
		(carnival amusement park equipment)	**333319**	Other Commercial and Service Industry Machinery Manufacturing	
		(other industrial and commercial machinery and equipment)	**333999**	All Other Miscellaneous General Purpose Machinery Manufacturing	
		(water leak detectors)	**334519**	Other Measuring and Controlling Device Manufacturing	
		(gasoline, oil, and intake filters for internal combustion engines, except for motor vehicles)	**336399**	All Other Motor Vehicle Parts Manufacturing	
	3711	Motor Vehicles and Passenger Car Bodies (automobiles)	**336111**	Automobile Manufacturing	
		(light trucks and utility vehicles)	**336112**	Light Truck and Utility Vehicle Manufacturing	
		(heavy duty trucks)	**336120**	Heavy Duty Truck Manufacturing	
		(kit car and other passenger car bodies)	**336211**	Motor Vehicle Body Manufacturing	

Sector AB. Transportation Equipment, Industrial or Commercial Machinery

Sub-sector	SIC Codes		NAICS Codes		Notes
		(military armored vehicles)	**336992**	Military Armored Vehicle, Tank, and Tank Component Manufacturing	
	3713	Truck and Bus Bodies	**336211**	Motor Vehicle Body Manufacturing	
	3714	Motor Vehicle Parts and Accessories (dump truck lifting mechanisms and fifth wheels)	**336211**	Motor Vehicle Body Manufacturing	
		(gasoline engines and engine parts including rebuilt)	**336312**	Gasoline Engine and Engine Parts Manufacturing	
		(wiring harness sets, other than ignition; block heaters and battery heaters; instrument board assemblies; permanent defrosters; windshield washer-wiper mechanisms; cruise control mechanisms; and other electrical equipment for internal combustion engines)	**336322**	Other Motor Vehicle Electrical and Electronic Equipment Manufacturing	
		(steering and suspension parts)	**336330**	Motor Vehicle Steering and Suspension Components (except Spring) Manufacturing	
		(brake and brake systems, including assemblies)	**336340**	Motor Vehicle Brake System Manufacturing	
		(transmissions and power train parts, including rebuilding)	**336350**	Motor Vehicle Transmission and Power Train Parts Manufacturing	
		(except truck and bus bodies, trailers, engine and engine parts, motor vehicle electrical and electronic equipment, motor vehicle steering and suspension components, motor vehicle brake systems, and motor vehicle transmission and power train parts)	**336399**	All Other Motor Vehicle Parts Manufacturing	
	3715	Truck Trailers	**336212**	Truck Trailer Manufacturing	
	3716	Motor Homes	**336213**	Motor Home Manufacturing	
	3721	Aircraft (except research and development not producing prototypes)	**336411**	Aircraft Manufacturing	
	3724	Aircraft Engines and Engine Parts (except research and development not producing prototypes)	**336412**	Aircraft Engine and Engine Parts Manufacturing	
	3728	Aircraft Parts and Auxiliary Equipment, Not Elsewhere Classified (fluid power aircraft subassemblies)	**332912**	Fluid Power Valve and Hose Fitting Manufacturing	
		(target drones)	**336411**	Aircraft Manufacturing	

Sector AB. Transportation Equipment, Industrial or Commercial Machinery

Sub-sector	SIC Codes		NAICS Codes		Notes
		(except fluid power aircraft subassemblies, target drones, and research and development not producing prototypes)	**336413**	Other Aircraft Part and Auxiliary Equipment Manufacturing	
	3743	Railroad Equipment (locomotive fuel lubricating or cooling medium pumps)	**333911**	Pump and Pumping Equipment Manufacturing	
		(except locomotive fuel lubricating or cooling medium pumps)	**336510**	Railroad Rolling Stock Manufacturing	
	3751	Motorcycles, Bicycles, and Parts	**336991**	Motorcycle, Bicycle, and Parts Manufacturing	
	3761	Guided Missiles and Space Vehicles (except research and development not producing prototypes)	**336414**	Guided Missile and Space Vehicle Manufacturing	
	3764	Guided Missile and Space Vehicle Propulsion Units and Propulsion Unit Parts (except research and development not producing prototypes)	**336415**	Guided Missile and Space Vehicle Propulsion Unit and Propulsion Unit Parts Manufacturing	
	3769	Guided Missile and Space Vehicle Parts and Auxiliary Equipment, Not Elsewhere Classified (except research and development not producing prototypes)	**336419**	Other Guided Missile and Space Vehicle Parts and Auxiliary Equipment Manufacturing	
	3792	Travel Trailers and Campers	**336214**	Travel Trailer and Camper Manufacturing	
	3795	Tanks and Tank Components	**336992**	Military Armored Vehicle, Tank, and Tank Component Manufacturing	
	3799	Transportation Equipment, Not Elsewhere Classified (wheelbarrows)	**333924**	Industrial Truck, Tractor, Trailer, and Stacker Machinery Manufacturing	
		(automobile, boat, utility and light truck trailers)	**336214**	Travel Trailer and Camper Manufacturing	
		(trailer hitches)	**336399**	All Other Motor Vehicle Parts Manufacturing	
		(except automobile, boat, utility light truck trailers, trailer hitches, and wheelbarrows)	**336999**	All Other Transportation Equipment Manufacturing	

Sector AC. Electronic, Electrical, Photographic and Optical Goods					
Sub-sector	**SIC Codes**		**NAICS Codes**		**Notes**
AC1	**3571**	Electronic Computers	**334111**	Electronic Computer Manufacturing	
	3572	Computer Storage Devices	**334112**	Computer Storage Device Manufacturing	
	3575	Computer Terminals	**334113**	Computer Terminal Manufacturing	
	3577	Computer Peripheral Equipment, Not Elsewhere Classified (except plotter controllers and magnetic tape head cleaners)	**334119**	Other Computer Peripheral Equipment Manufacturing	
		(plotter controllers)	**334418**	Printed Circuit Assembly (Electronic Assembly) Manufacturing	
		(magnetic tape head cleaners)	**334613**	Magnetic and Optical Recording Media Manufacturing	
	3578	Calculating and Accounting Machinery, Except Electronic Computers (change making machines)	**333311**	Automatic Vending Machine Manufacturing	
		(except point of sales terminals, change making machines and funds transfer devices)	**333313**	Office Machinery Manufacturing	
		(point of sale terminals and fund transfer devices)	**334119**	Other Computer Peripheral Equipment Manufacturing	
	3579	Office Machines, Not Elsewhere Classified (except timeclocks, time stamps, pencil sharpeners, stapling machines, etc.)	**333313**	Office Machinery Manufacturing	
		(time clocks and other time recording devices)	**334518**	Watch, Clock, and Part Manufacturing	
		(pencil sharpeners, staplers and other office equipment)	**339942**	Lead Pencil and Art Good Manufacturing	
	3612	Power, Distribution, and Specialty Transformers	**335311**	Power, Distribution, and Specialty Transformer Manufacturing	
	3613	Switchgear and Switchboard Apparatus	**335313**	Switchgear and Switchboard Apparatus Manufacturing	
	3621	Motors and Generators	**335312**	Motors and Generator Manufacturing	
	3624	Carbon and Graphite Products	**335991**	Carbon and Graphite Product Manufacturing	
	3625	Relays and Industrial Controls	**335314**	Relay and Industrial Control Manufacturing	
	3629	Electrical Industrial Apparatus, Not Elsewhere Classified	**335999**	All Other Miscellaneous Electrical Equipment and Component Manufacturing	
	3631	Household Cooking Equipment	**335221**	Household Cooking Appliance Manufacturing	
	3632	Household Refrigerators and Home and Farm Freezers	**335222**	Household Refrigerator and Home Freezer Manufacturing	

Sector AC. Electronic, Electrical, Photographic and Optical Goods

Sub-sector	SIC Codes		NAICS Codes		Notes
	3633	Household Laundry Equipment	**335224**	Household Laundry Equipment Manufacturing	
	3634	Electric Housewares and Fans (wall and baseboard heating units for permanent installation)	**333414**	Heating Equipment (except Warm Air Furnaces) Manufacturing	
		(except wall and baseboard heating units for permanent installation, electronic cigarette lighters, and wall mount restroom hand dryers)	**335211**	Electric Housewares and Household Fan Manufacturing	
		(electronic cigarette lighters)	**339999**	All Other Miscellaneous Manufacturing	
	3635	Household Vacuum Cleaners	**335212**	Household Vacuum Cleaner Manufacturing	
	3639	Household Appliances, Not Elsewhere Classified (household sewing machines)	**333298**	All Other Industrial Machinery Manufacturing	
		(floor waxing and floor polishing machines)	**335212**	Household Vacuum Cleaner Manufacturing	
		(except floor waxing and floor polishing machines, and household sewing machines)	**335228**	Other Major Household Appliance Manufacturing	
	3641	Electric Lamp Bulbs and Tubes	**335110**	Electric Lamp Bulbs and Part Manufacturing	
	3643	Current-Carrying Wiring Devices	**335931**	Current-Carrying Wiring Device Manufacturing	
	3644	Noncurrent-Carrying Wiring Devices (fish wire, electrical wiring tool)	**332212**	Hand and Edge Tool Manufacturing	Any facility whose primary activity is manufacturing fish wire, electrical wiring tool (SIC 3644 / NAICS 332212) should be regulated under Sector AA, but may continue to be regulated under Sector AC, or alternatively, under Sector AD. Sector AA applies additional technology-based effluent limits comprising good housekeeping measures, spill prevention and response, and spills and leaks; additional SWPPP requirements; and additional inspection requirements. Sector AC does not apply additional sector- specific requirements and EPA may establish facility-specific monitoring and reporting requirements under Sector AD. Regulatory burden would be greater under Sector AA.
		(except fishwire, electrical wiring tool)	**335932**	Noncurrent-Carrying Wiring Device Manufacturing	

Sector AC. Electronic, Electrical, Photographic and Optical Goods

Sub-sector	SIC Codes		NAICS Codes		Notes
	3645	Residential Electric Lighting Fixtures	**335121**	Residential Electric Lighting Fixture Manufacturing	
	3646	Commercial, Industrial, and Institutional Electric Lighting Fixtures	**335122**	Commercial, Industrial, and Institutional Electric Lighting Fixture Manufacturing	
	3647	Vehicular Lighting Equipment	**336321**	Vehicular Lighting Equipment Manufacturing	
	3648	Lighting Equipment, Not Elsewhere Classified	**335129**	Other Lighting Equipment Manufacturing	
	3651	Household Audio and Video Equipment	**334310**	Audio and Video Equipment Manufacturing	
	3652	Phonograph Records and Prerecorded Audio Tapes and Disks (reproduction of all other media except video)	**334612**	Prerecorded Compact Disc (except Software), Tape, and Record Reproducing	
	3661	Telephone and Telegraph Apparatus (except consumer external modems)	**334210**	Telephone Apparatus Manufacturing	
		(consumer external modems)	**334418**	Printed Circuit Assembly (Electronic Assembly) Manufacturing	
	3663	Radio and Television Broadcasting and Communications Equipment	**334220**	Radio and Television Broadcasting and Wireless Communications Equipment Manufacturing	
	3669	Communications Equipment, Not Elsewhere Classified	**334290**	Other Communications Equipment Manufacturing	
	3671	Electron Tubes	**334411**	Electron Tube Manufacturing	
	3672	Printed Circuit Boards	**334412**	Bare Printed Circuit Board Manufacturing	
	3674	Semiconductors and Related Devices	**334413**	Semiconductor and Related Device Manufacturing	
	3675	Electronic Capacitors	**334414**	Electronic Capacitor Manufacturing	
	3676	Electronic Resistors	**334415**	Electronic Resistor Manufacturing	
	3677	Electronic Coils, Transformers, and Other Inductors	**334416**	Electronic Coil, Transformer, and Other Inductor Manufacturing	
	3678	Electronic Connectors	**334417**	Electronic Connector Manufacturing	
	3679	Electronic Components, Not Elsewhere Classified (antennas)	**334220**	Radio and Television Broadcasting and Wireless Communications Equipment Manufacturing	
		(radio headphones)	**334310**	Audio and Video Equipment Manufacturing	
		(printed circuit/electronic assembly manufacturing)	**334418**	Printed Circuit Assembly (Electronic Assembly) Manufacturing	
		(other electronic components)	**334419**	Other Electronic Component Manufacturing	
	3691	Storage Batteries	**335911**	Storage Battery Manufacturing	
	3692	Primary Batteries, Dry and Wet	**335912**	Primary Battery Manufacturing	

Sector AC. Electronic, Electrical, Photographic and Optical Goods

Sub-sector	SIC Codes		NAICS Codes		Notes
	3694	Electrical Equipment for Internal Combustion Engines	**336322**	Other Motor Vehicle Electrical and Electronic Equipment Manufacturing	
	3695	Magnetic and Optical Recording Media	**334613**	Magnetic and Optical Recording Media Manufacturing	
	3699	Electrical Machinery, Equipment, and Supplies, Not Elsewhere Classified (electronic teaching machines and flight simulators)	**333319**	Other Commercial and Service Industry Machinery Manufacturing	
		(outboard electric motors)	**333618**	Other Engine Equipment Manufacturing	Any facility whose primary activity is manufacturing outboard electric motors (SIC 3699 / NAICS 333618) should be regulated under Sector AB, but may continue to be regulated under Sector AC, or alternatively, under Sector AD. Sector AB applies additional sector-specific SWPPP requirements. Sector AC does not apply additional sector-specific requirements and EPA may establish facility-specific monitoring and reporting requirements under Sector AD. Regulatory burden would be greater under Sector AB.
		(laser welding and soldering equipment)	**333992**	Welding and Soldering Equipment Manufacturing	
		(Christmas tree lighting sets, electric insect lamps, electric fireplace logs, and trouble lights)	**335129**	Other Lighting Equipment Manufacturing	
		(other electrical industrial apparatus)	**335999**	All Other Miscellaneous Electrical Equipment and Component Manufacturing	
	3812	Search, Detection, Navigation, Guidance, Aeronautical, and Nautical Systems and Instruments	**334511**	Search, Detection, Navigation, Guidance, Aeronautical, and Nautical System and Instrument Manufacturing	
	3821	Laboratory Apparatus and Furniture	**339111**	Laboratory Apparatus and Furniture Manufacturing	
	3822	Automatic Controls for Regulating Residential and Commercial Environments and Appliances	**334512**	Automatic Environmental Control Manufacturing for Residential, Commercial, and Appliance Use	
	3823	Industrial Instruments for Measurement, Display, and Control of Process Variables; and Related Products	**334513**	Instruments and Related Products Manufacturing for Measuring, Displaying, and Controlling Industrial Process Variables	

Sector AC. Electronic, Electrical, Photographic and Optical Goods

Sub-sector	SIC Codes		NAICS Codes		Notes
	3824	Totalizing Fluid Meters and Counting Devices	**334514**	Totalizing Fluid Meter and Counting Device Manufacturing	
	3825	Instruments for Measuring and Testing of Electricity and Electrical Signals			
		(automotive ammeters and voltmeters)	**334514**	Totalizing Fluid Meter and Counting Device Manufacturing	
		(except automotive instruments)	**334515**	Instrument Manufacturing for Measuring and Testing Electricity and Electrical Signals	
	3826	Laboratory Analytical Instruments	**334516**	Analytical Laboratory Instrument Manufacturing	
	3827	Optical Instruments and Lenses	**333314**	Optical Instruments and Lens Manufacturing	
	3829	Measuring and Controlling Devices, Not Elsewhere Classified			
		(motor vehicle gauges)	**334514**	Totalizing Fluid Meter and Counting Device Manufacturing	
		(electronic chronometers)	**334518**	Watch, Clock, and Part Manufacturing	
		(except medical thermometers, electronic chronometers and motor vehicle gauges)	**334519**	Other Measuring and Controlling Device Manufacturing	
		(medical thermometers)	**339112**	Surgical and Medical Instrument Manufacturing	
	3841	Surgical and Medical Instruments and Apparatus (tranquilizer guns)	**332994**	Small Arms Manufacturing	Any facility whose primary activity is manufacturing tranquilizer guns (SIC 3841 / NAICS 332994) should be regulated under Sector AA, but may continue to be regulated under Sector AC, or alternatively, under Sector AD. Sector AA applies additional technology-based effluent limits comprising good housekeeping measures, spill prevention and response, and spills and leaks; additional SWPPP requirements; and additional inspection requirements. Sector AC does not apply additional sector-specific requirements and EPA may establish facility-specific monitoring and reporting requirements under Sector AD. Regulatory burden would be greater under Sector AA.
		(operating room tables)	**339111**	Laboratory Apparatus and Furniture Manufacturing	

Sector AC. Electronic, Electrical, Photographic and Optical Goods

Sub-sector	SIC Codes		NAICS Codes		Notes
		(except tranquilizer guns and operating room tables)	**339112**	Surgical and Medical Instrument Manufacturing	
	3842	Orthopedic, Prosthetic, and Surgical Appliances and Supplies (incontinent pads and bed pads)	**322291**	Sanitary Paper Product Manufacturing	Any facility whose primary activity is manufacturing incontinent pads and bed pads (SIC 3842 / NAICS 322291) should be regulated under Sector B, but may continue to be regulated under Sector AC, or alternatively, under Sector AD. Sectors B and AC do not apply additional sector-specific requirements. EPA may require additional facility-specific monitoring and reporting requirement under Sector AD. Regulatory burden is not expected to differ between Sectors B and AC.
		(electronic hearing aids)	**334510**	Electromedical and Electrotherapeutic Apparatus Manufacturing	
		(except electronic hearing aids, incontinent pads, anatomical models, and bed pads)	**339113**	Surgical Appliance and Supplies Manufacturing	
		(anatomical models)	**339999**	All Other Miscellaneous Manufacturing	
	3843	Dental Equipment and Supplies	**339114**	Dental Equipment and Supplies Manufacturing	
	3844	X-Ray Apparatus and Tubes and Related Irradiation Apparatus	**334517**	Irradiation Apparatus Manufacturing	
	3845	Electromedical and Electrotherapeutic Apparatus (except CT and CAT scanners)	**334510**	Electromedical and Electrotherapeutic Apparatus Manufacturing	
		(CT and CAT Scanners)	**334517**	Irradiation Apparatus Manufacturing	
	3851	Ophthalmic Goods (intraoccular lenses, i.e., surgical implants)	**339113**	Surgical Appliance and Supplies Manufacturing	
		(except intraocular lenses)	**339115**	Ophthalmic Goods Manufacturing	
	3861	Photographic Equipment and Supplies (photographic films, paper, plates and chemicals)	**325992**	Photographic Film, Paper, Plate, and Chemical Manufacturing	
		(except photographic film, paper, plates, and chemicals)	**333315**	Photographic and Photocopying Equipment Manufacturing	
	3873	Watches, Clocks, Clockwork Operated Devices, and Parts	**334518**	Watch, Clock, and Part Manufacturing	

Sector AD. Non-Classified Facilities		
Sub-Sector	**Narrative Description**	**Notes**
AD1	Other stormwater discharges designated by the Director as needing a permit (see 40 CFR 122.26(a)(9)(i)(C) & (D)) or any facility discharging stormwater associated with industrial activity not described by any of Sectors A-AC. NOTE: Facilities may not elect to be covered under Sector AD. Only the Director may assign a facility to Sector AD.	

Appendix O - Summary of Reports Permit Submittals

Permit Section	Applicable Operator	Report/Submittal	Frequency	Due Date(s)	Where to Submit
Part 1.1.4	Only for operators seeking coverage under Part 1.1.4 eligibility criterion C3	**Procedures Relating to Endangered Species Protection Appendix E Criterion C3 Eligibility Form**: Submittal of Criterion C Form	Once, if applicable	At the same time as the NOI for permit coverage is submitted (an additional 30 calendar day review period will apply)	Electronically using the NPDES eReporting Tool (NeT) for MSGP
Part 1.3	**Operator operating consistent with EPA's No Action Assurance and submitted an Intent to Operate (ITO) form** [Operators of industrial activities who commenced discharging between June 4, 2020 and March 1, 2021 and have been operating consistent with EPA's June 3, 2020 'No Action Assurance for the NPDES Stormwater Multi-Sector General Permit for Industrial Activities.']	Submittal of Notice of Intent (NOI)	Once per permit term	As soon as possible, but see the June 3, 2020 'No Action Assurance for the NPDES Stormwater Multi-Sector General Permit for Industrial Activities' (and any updates to that document) for additional guidance on deadlines.	Electronically using the NPDES eReporting Tool (NeT for MSGP
Part 1.3	**New facility without MSGP coverage** (Operators of industrial activities that will commence discharging after March 1, 2021)	Submittal of Notice of Intent (NOI)	Once per permit term	At least 30 calendar days prior to commencing discharge	Electronically using the NPDES eReporting Tool (NeT) for MSGP
Part 1.3	**Existing MSGP facility** [Operators of industrial activities whose stormwater discharges were covered under the 2015 MSGP]	Submittal of Notice of Intent (NOI)	Once per permit term	No later than May 30, 2021. However, if you have not previously obtained coverage under an NPDES permit, you must submit your NOI immediately.	Electronically using the NPDES eReporting Tool (NeT) for MSGP

Permit Section	Applicable Operator	Report/Submittal	Frequency	Due Date(s)	Where to Submit
Part 1.3	**Existing facility covered under an alternative permit** [Operators seeking coverage for stormwater discharges previously covered under an individual permit or an alternative general permit]	Submittal of Notice of Intent (NOI)	Once per permit term	At least 30 calendar days prior to commencing discharge	Electronically using the NPDES eReporting Tool (NeT) for MSGP
Part 1.3	**Existing MSGP facility with a new operator** [New operators of existing industrial activities with stormwater discharges previously authorized under the 2021 MSGP]	Submittal of Notice of Intent (NOI)	Once per permit term	At least 30 calendar days prior to the date of transfer of control to the new operator.	Electronically using the NPDES eReporting Tool (NeT) for MSGP
Part 1.3	**Existing facility without MSGP coverage** [Operators of industrial activities that commenced discharging prior to March 1, 2021, but whose stormwater discharges were not covered under the 2015 MSGP or another NPDES permit and have not been operating consistent with EPA's No Action Assurance for EPA's NPDES MSGP]	Submittal of Notice of Intent (NOI)	Once per permit term	Immediately; your stormwater discharges are currently unpermitted.	Electronically using the NPDES eReporting Tool (NeT) for MSGP

Permit Section	Applicable Operator	Report/Submittal	Frequency	Due Date(s)	Where to Submit
Part 1.3.4	**An operator needing to correct or update any NOI fields**	Submittal of a Change NOI	As applicable	For existing operator, within 30 calendar days after the change occurs. Within 30 calendar days of the transfer in operator or a new operator taking over operational control at an existing facility, the new operator must submit a new NOI. No later than 30 calendar days after MSGP coverage becomes active for the new operator, the previous operator must submit a Notice of Termination (NOT) per Part 1.4.	Electronically using the NPDES eReporting Tool (NeT) for MSGP
Part 1.4	**An operator seeking to terminate their permit coverage under the 2021 MSGP**	Notice of Termination	Once, if applicable	Within 30 days after: • a new operator takes over responsibility for the facility; or • operations and stormwater discharges have ceased; or • for Sector G, H, or J facilities, the applicable termination requirements have been met; or • alternative permit coverage has been obtained	Electronically using the NPDES eReporting Tool (NeT) for MSGP

Permit Section	Applicable Operator	Report/Submittal	Frequency	Due Date(s)	Where to Submit
Part 1.5	**An eligible operator seeking an exclusion from NPDES permitting per 40 CFR 122.26(g)**	Conditional "No Exposure" Certification Form (NEC)	If eligible, once every 5 years	As necessary	Electronically using the NPDES eReporting Tool (NeT) for MSGP
Part 3.1.6	**All operators, unless eligible for an exception**	Routine Inspection Documentation	At least quarterly	By the end of the quarter	Reports are kept with SWPPP
Part 3.2.3	**All operators, unless eligible for an exception**	Quarterly Visual Assessment Documentation	At least quarterly	By the end of the quarter	Reports are kept with SWPPP
Part 5.3	**Operators that must perform corrective action or Additional Implementation Measures per Parts 5.1 and 5.2**	Corrective Action and AIM Documentation	• Document existence of corrective action/AIM condition within 24 hours of becoming aware of the condition; • Document corrective actions/AIMs taken or to be taken within 14 days from the time of discovery of the condition.	As necessary	Reports are kept with SWPPP
Part 6 Part 7.3	**All operators**	**Stormwater Pollution Prevention Plan (SWPPP)**	• Attach SWPPP to NOI, provide URL for SWPPP, or provide SWPPP information directly on the NOI form. • Update the on-site SWPPP as site conditions indicate. At minimum, the SWPPP must be modified based on corrective actions and deadlines required under Part 5.	Develop initial SWPPP prior to the submittal of NOI form. Update the SWPPP information included in attachment to NOI, on URL, or on NOI form, at a minimum, no later than 45 days after conducting the final routine facility inspection for the year.	Electronically using the NPDES eReporting Tool (NeT) for MSGP

Permit Section	Applicable Operator	Report/Submittal	Frequency	Due Date(s)	Where to Submit
Part 4 Part 7.4	**All operators**	Discharge Monitoring Reports (DMRs)	• Indicator Monitoring for pH, Total Suspended Solids (TSS), and Chemical Oxygen Demand (COD) (Part 4.2.1.1.a.): 1/quarter for entire permit coverage; • Indicator Monitoring for Polycyclic Aromatic Hydrocarbons (PAHs) (Part 4.2.1.1.b): 2/year in years 1 and 4 of permit coverage; • Benchmark Monitoring (Part 4.2.2): 1/quarter in years 1 and 4 of permit coverage (additional monitoring may be required if exceedances occur); • Effluent Limitations Monitoring (Part 4.2.3): 1/year for entire permit coverage; • State or Tribal Monitoring (Part 4.2.4): See Part 9 of the permit for frequency; • Impaired Waters Monitoring (Part 4.2.5): 1/year in years 1 and 4 of permit coverage for discharges to impaired waters without an EPA-approved or established total maximum daily load (TMDL)	Within 30 days of receiving your full laboratory results for all monitored discharge points during the reporting period.	Electronically using EPA's electronic DMR tool (Net-DMR)

Permit Section	Applicable Operator	Report/Submittal	Frequency	Due Date(s)	Where to Submit
Part 7.4	**All operators**	Annual Report	1/year	By January 30th	Electronically using the NPDES eReporting Tool (NeT) for MSGP (NeT-MSGP)
Part 7.5	**Operators subject to follow-up monitoring per Part 4.2.3.3**	Exceedance Report for Numeric Effluent Limitations	If applicable	30 days after receiving laboratory results if 30-day follow-up monitoring indicates exceedance	Follow-up monitoring submitted Electronically using EPA's electronic DMR tool (Net-DMR) Exceedance reports submitted directly to the applicable EPA Regional Office listed in Part 7.8 of the permit
Part 7.6	**Any applicable operator**	Additional Reporting (Noncompliance endangering health, reportable quantity spills, etc.)	As necessary	Varies – see Part 7.6	Varies – see Part 7.6

Appendix P - List of Federal CERCLA Sites

Part 1.1.7 of the MSGP has special requirements for discharges to a federal CERCLA site.[1]

If your facility discharges to one of the federal CERCLA sites listed below, you must notify the EPA Regional Office when submitting your NOI and the EPA Regional Office must determine that you are eligible for permit coverage. In determining eligibility for coverage under Part 1.1.7, the EPA Regional Office may evaluate whether you are implementing or plan to implement adequate controls and/or procedures to ensure your discharge will not lead to recontamination of aquatic media at the CERCLA Site, (i.e., your stormwater discharge will not be controlled as necessary such that the receiving water of the United States will meet an applicable water quality standard. If it is determined that your facility discharges to a CERCLA Site listed below after you have obtained coverage under this permit, you must contact your EPA Regional Office and ensure that you have either implemented or will implement adequate controls and/or procedures to ensure that your discharges will not lead to recontamination of aquatic media at the CERCLA Site such that your stormwater discharge will be controlled as necessary such that the receiving water of the United States will meet an applicable water quality standard.

EPA Region 10

The CERCLA Sites and the receiving waters associated with these sites to which the requirements of Part 1.1.7 apply are listed in the table below. The areas where the permit applies are enumerated in Appendix C of the permit. Operators who discharge / intend to discharge into the receiving waters listed below must first contact the EPA Regional Office before submitting an NOI. Contact information is viewable at: https://www.epa.gov/npdes-permits/stormwater-discharges-industrial-activities-region-10.

Similarly, if you have received notice from EPA that the facility to be covered under the MSGP is considered a potential source to a clean up site, you must first contact the Regional EPA office before submitting an NOI.

	Waterbody (HUC code/Watershed)	**Superfund Sites** **CERCLIS ID** **Latitude / Longitude** **Major Contaminants**
ID	St. Joe River; Coeur d'Alene Lake Basin	St. Maries Creosote IDSFN1002095 47.191697 / -116.343000L PAHs, HPAHs
WA	Commencement Bay, Puget Sound	Commencement Bay, Near Shore/Tide Flats WAD980726368 47.155998 / -122.245998 Dioxins, furans, arsenic, copper, lead, zinc, 4-methyl-phenol, Hex-CB, HPAHs, PCBs, PCE, cadmium, mercury, LPAHs
WA	Duwamish Waterway; Elliott Bay; Puget Sound	Harbor Island (Lead) WAD980722839 47.344584 / -122.210792 Lead, arsenic, copper, HPAHs, LPAHs, mercury, PCBs, zinc, TBT

---

[1] "CERCLA site" means a facility as defined in Section 101(9) of the Comprehensive Environmental Response, Compensation and Liability Act (CERCLA), 42 U.S.C. § 9601(9), that is undergoing a remedial investigation and feasibility study, or for which a Record of Decision for remedial action has been issued in accordance with the National Contingency Plan, 40 C.F.R. Part 300

EPA Region 10

The CERCLA Sites and the receiving waters associated with these sites to which the requirements of Part 1.1.7 apply are listed in the table below. The areas where the permit applies are enumerated in Appendix C of the permit. Operators who discharge / intend to discharge into the receiving waters listed below must first contact the EPA Regional Office before submitting an NOI. Contact information is viewable at: https://www.epa.gov/npdes-permits/stormwater-discharges-industrial-activities-region-10.

Similarly, if you have received notice from EPA that the facility to be covered under the MSGP is considered a potential source to a clean up site, you must first contact the Regional EPA office before submitting an NOI.

	Waterbody (HUC code/Watershed)	**Superfund Sites** **CERCLIS ID** **Latitude / Longitude** **Major Contaminants**
WA	Clam Bay; Puget Sound	Old Navy Dump/ Manchester Lab WA8680030931 47.342798 / -122.325298 PCBs, copper, lead, zinc, silver, 2,4-dimethyl-phenol, PCBs
WA	Elliott Bay; Puget Sound	Pacific Sound Resources WAD009248287 47.345639 / -122.215998 LMW PAHs, HMWPAHs, PCBs
WA	Columbia River	Upper Columbia River (T2) WASFN1002171 47.5722 / -118.5846
WA	Puget Sound	Puget Sound Naval Shipyard WA2170023418 47.333298 / -122.384999 PCBs, mercury
WA	Puget Sound	Wycoff / Eagle Harbor WAD009248295 47.371798 / -122.310012 Mercury, LPAHs, HPAHs
WA	Duwamish Waterway; Elliott Bay; Puget Sound	Lower Duwamish Waterway (T2) WA0002329803 47.321608 / -122.194040 PCBs, PAHs, phthalates, inorganics, mercury, semi-VOCs

UNITED STATES ENVIRONMENTAL PROTECTION AGENCY (EPA)
NATIONAL POLLUTANT DISCHARGE ELIMINATION SYSTEM (NPDES)
MULTI-SECTOR GENERAL PERMIT (MSGP)
FOR STORMWATER DISCHARGES ASSOCIATED WITH INDUSTRIAL ACTIVITY
FACT SHEET

I. Background

Congress passed the Federal Water Pollution Control Act of 1972 (Public Law 92-500, October 18, 1972) (hereinafter, Clean Water Act or CWA), 33 U.S.C. 1251 et seq., with the objective to "restore and maintain the chemical, physical, and biological integrity of the Nation's waters." section 101(a), 33 U.S.C. 1251(a). To help achieve this objective, the CWA provides that "the discharge of any pollutant by any person shall be unlawful" except in compliance with other provisions of the statute. CWA section 301(a). 33 U.S.C. 1311(a). The CWA defines "discharge of a pollutant" to include "any addition of any pollutant to navigable waters from any point source." CWA section 502(12). 33 U.S.C. 1362(12). The U.S. Environmental Protection Agency (EPA) is authorized under CWA section 402(a) to issue a National Pollutant Discharge Elimination System (NPDES) permit for the discharge of any pollutant from a point source. 33 U.S.C. 1342(a). These NPDES permits are issued by EPA or NPDES-authorized state or tribal agencies. Since 1972, EPA and the authorized states have issued NPDES permits to thousands of dischargers, both industrial (e.g., manufacturing, energy, and mining facilities) and municipal (e.g., wastewater treatment plants). As required under Title III of the CWA, EPA has promulgated Effluent Limitations Guidelines (ELGs) and New Source Performance Standards (NSPS) for many industrial point source categories and these requirements are incorporated into NPDES permits. The Water Quality Act (WQA) of 1987 (Public Law 100-4, February 4, 1987) amended the CWA, adding CWA section 402(p), requiring implementation of a comprehensive program for addressing municipal and industrial stormwater discharges. 33 U.S.C. 1342(p).

Section 405 of the WQA of 1987 added section 402(p) of the CWA, which directed the EPA to develop a phased approach to regulate municipal and industrial stormwater discharges under the NPDES program. EPA published a final regulation on the first phase of this program on November 16, 1990, establishing permit application requirements for "stormwater discharges associated with industrial activity." See 55 FR 47990. EPA defined the term "stormwater discharge associated with industrial activity" in a comprehensive manner to cover a wide variety of facilities. See 40 CFR 122.26(b)(14). EPA is issuing the 2021 Multi-Sector General Permit (MSGP) under this statutory and regulatory authority.

The Regional Administrators of all 10 EPA Regions are issuing EPA's NPDES MSGP for stormwater discharges associated with industrial activity. The 2021 MSGP replaces the 2015 MSGP, which was issued on June 4, 2015 (80 FR 34403), and expired and was administratively continued on June 4, 2020. The 2021 MSGP is actually 50 separate general NPDES permits covering areas within an individual state, tribal land, or U.S. territory, or federal facilities. These 50 general permits contain provisions that require industrial facilities in 29 different industrial sectors to, among other things, implement control measures and develop site-specific stormwater pollution prevention plans (SWPPPs) to comply with NPDES requirements. In addition, the MSGP includes a thirtieth sector, available for EPA to permit additional industrial activities that the Agency determines require permit coverage for industrial stormwater discharges not included in the other 29 industrial sectors.

II. 2015 MSGP Litigation

After EPA issued the 2015 MSGP in June 2015, several parties, collectively referred to as "petitioners," filed petitions for review of the permit which were consolidated in the United States Court of Appeals for the Second Circuit. Petitioners included Waterkeeper Alliance, Apalachicola Riverkeeper, Galveston Baykeeper, Raritan Baykeeper, Inc. d/b/a NY/NJ Baykeeper, Snake River Waterkeeper, Ecological Rights Foundation, Our Children's Earth Foundation, Puget Soundkeeper Alliance, Lake Pend Oreille Waterkeeper, and Conservation Law Foundation. The Federal Water Quality Coalition and Federal Storm Water Association intervened in the case as respondents on August 4, 2015. Before any briefs were filed in the MSGP Litigation, the parties entered into settlement discussions under the auspices of the Second Circuit's Civil Appeals Mediation Program. A Settlement Agreement resulted from these discussions, which all parties signed on August 16,

2016. The Settlement Agreement did not affect the 2015 MSGP, but stipulated several terms that EPA agreed to address in the proposed 2020 MSGP (the Settlement Agreement can be found in the docket for the 2021 MSGP (Docket ID# EPA-HQ-OW-2019-0372)). EPA understands that the terms of the Settlement Agreement, in particular the proposed "Additional Implementation Measures" (AIM) benchmark exceedance requirements, will increase regulatory certainty for those who must comply with the permit, as intervenors expressed, while resolving petitioners' concerns that the previous corrective actions for benchmark exceedances under the 2015 MSGP were not sufficient to ensure that the permit controlled discharges as sufficient to protect water quality, as is required by the CWA. Industrial stormwater discharges are explicitly required to meet all provisions of CWA §301, including applicable water quality standards (CWA §402(p)(3)(A)). See Part 5 of this Fact Sheet for a detailed discussion of the final 2021 MSGP AIM requirements.

Below, EPA outlines how the Agency addressed the key terms from the Settlement Agreement in the proposed permit. The terms of the Settlement Agreement can be found in the Settlement Agreement in the docket for the 2021 MSGP (Docket ID# EPA-HQ-OW-2019-0372).

- The NRC Study. EPA funded a study conducted by the National Academies of Sciences, Engineering, and Medicine's (NAS) National Research Council (NRC) (NRC Study). The study committee was tasked to 1) Suggest improvements to the current MSGP benchmarking monitoring requirements; 2) Evaluate the feasibility of numeric retention standards; and 3) Identify the highest-priority industrial facilities/subsectors for consideration of additional discharge monitoring. The study was released in February 2019 and can be found at the following link: https://www.nap.edu/catalog/25355/improving-the-epa-multi-sector-general-permit-for-industrial-stormwater-discharges. In the Settlement Agreement, EPA agreed to consider all recommendations suggested in the NRC Study when drafting the proposed MSGP. In addition, where the completed NRC Study made recommendations regarding the sectors/subsectors, frequency, parameters, and/or parameter levels in the 2015 MSGP's benchmark monitoring provisions, EPA solicited comment on such recommendations in the proposed MSGP. See Section III below for a detailed outline and discussion of the NRC Study recommendations.
- Comparative Analysis. EPA reviewed examples of numeric and non-numeric effluent limitations (including complete prohibitions, if any) applicable to the discharge of industrial stormwater that have been set in other jurisdictions (i.e., states with NPDES permitting authority) and evaluated the bases for those limitations. EPA included this analysis in the docket for this permit on regulations.gov (Docket ID#: EPA-HQ-OW-2019-0372).
- Preventing Recontamination of Federal CERCLA Sites. EPA proposed for comment an expansion to all EPA Regions of the existing eligibility criterion regarding operators discharging to Federal Comprehensive Environmental Response, Compensation and Liability (CERCLA or Superfund) sites that currently applies to operators in Region 10 in the 2015 MSGP. See Part 1.1.7 of the proposed permit.
- Eligibility Criterion regarding Coal Tar Sealcoat. EPA proposed for comment a new eligibility condition for operators who, during their coverage under the next MSGP, seek to use coal tar sealant to initially seal or to re-seal pavement and thereby discharge polycyclic aromatic hydrocarbons ("PAHs") in stormwater. EPA proposed that those operators are not eligible for coverage under the MSGP and must either eliminate such discharge or apply for an individual permit. See Part 1.1.8 of the proposed permit.
- Permit Authorization Relating to a Pending Enforcement Action. EPA solicited comment on a provision relating to the situation where a facility not covered under the 2015 MSGP submits a Notice of Intent (NOI) for permit coverage while there is a related, pending stormwater-related enforcement action by EPA, a state, or a citizen (to include both notices of violations ("NOVs") by EPA or the State and notices of intent to bring a citizen suit). In this situation, EPA solicited

comment on "putting a hold on" the facility's NOI for an additional 30 days to allow EPA an opportunity to (a) review the facility's control measures expressed in its SWPPP, (b) identify any additional control measures that EPA deems necessary to control site discharges in order to ensure that discharges meet technology-based and water quality-based effluent limitations, and/or (c) to conduct further inquiry regarding the site's eligibility for general permit coverage. See Part 1.3.3 and Table 1-2 of the proposed permit.

- Additional Implementation Measures (AIM). EPA included in the benchmark monitoring section of the proposed MSGP "Additional Implementation Measures" (AIM) required for operators responding to benchmark exceedances. EPA included proposed AIM requirements in Part 5.2 of the proposed permit.
- Part 4.2.4.1 Facilities Required to Monitor for Discharges to Impaired Waters Without an EPA-approved or Established Total Maximum Daily Load (TMDL) (previously Part 6.2.4.1 in the 2015 MSGP). EPA proposed for comment specific edits regarding monitoring for impaired waters. See Part 4.2.4.1(a) of the proposed permit.
- Revision of Industrial Stormwater Fact Sheets. EPA reviewed and proposed to revise the MSGP's sector-specific fact sheets associated with the permit. See Appendix Q of the proposed permit.

III. The National Research Council (NRC) National Academies of Sciences (NAS) Industrial Stormwater Study

Per the 2015 MSGP Settlement Agreement, EPA agreed to fund a study conducted by the National Academies of Sciences, Engineering, and Medicine's (NAS) National Research Council (NRC).

The study committee was tasked to 1) Suggest improvements to the current MSGP benchmarking monitoring requirements; 2) Evaluate the feasibility of numeric retention standards; and 3) Identify the highest-priority industrial facilities/subsectors for consideration of additional discharge monitoring. NAS released the study in February 2019, which can be found at the following link: https://www.nap.edu/catalog/25355/improving-the-epa-multi-sector-general-permit-for-industrial-stormwater-discharges.

In the Settlement Agreement, EPA agreed that, when drafting the proposed MSGP, it would consider all recommendations suggested in the completed NRC Study. In addition, where the completed NRC Study made recommendations regarding the sectors/subsectors, frequency, parameters, and/or parameter levels in the 2015 MSGP's benchmark monitoring provisions, EPA agreed to solicit comment on such recommendations in the proposed MSGP. EPA thoroughly reviewed the NRC Study recommendations and relied on the committee's analysis of the permit to support the proposed permit requirements originating from the Study. Because EPA funded the NRC study, EPA did not conduct additional analyses that would have duplicated any analyses found in the NRC study. In the proposed 2020 MSGP, EPA outlined how and where the Agency considered each recommendation from the NRC study. Where recommendations were related or linked to each other, EPA addressed them jointly, as described below. After considering comments received on the proposed MSGP, for the 2021 MSGP, EPA finalized several of the proposed requirements that were informed by the NRC study.

NRC Recommendations on Pollutant Monitoring Requirements and Benchmark Thresholds

1. **NRC recommendation:** EPA should require industry-wide monitoring under the MSGP for pH, total suspended solids (TSS), and chemical oxygen demand (COD) as basic indicators of the effectiveness of stormwater control measures (SCMs) employed on site.
    - **EPA Proposed MSGP:** EPA proposed to require "universal benchmark monitoring" for pH, TSS, and COD for all facilities. See Part 4.2.1 of the proposed permit and the proposed Fact Sheet.

- **EPA Final MSGP:** For the final 2021 MSGP, EPA requires certain operators to conduct "report-only" indicator analytical monitoring for three parameters - pH, TSS, and COD - quarterly for the duration of the permit. This requirement applies to all operators in the following subsectors that do not have sector-specific benchmark monitoring requirements in the 2021 MSGP: B2, C5, D2, E3, F5, I1, J3, L2, N2, O1, P1, R1, T1, U3, V1, W1, X1, Y2, Z1, AB, AC, and AD. See Part 4.2.1 of the final permit and this Fact Sheet for more information on the final MSGP provisions.

2. **NRC recommendation:** EPA should implement a process to periodically review and update sector-specific benchmark monitoring requirements that incorporates new scientific information.

   - **EPA Proposed MSGP:** As part of the permitting process to propose and finalize the MSGP, EPA reviews and updates sector-specific benchmark monitoring requirements to incorporate new scientific information.

     As part of the 2015 MSGP Settlement Agreement, EPA proposed to revise the MSGP's sector-specific fact sheets associated with the permit. See Appendix Q of the proposed permit and the proposed Fact Sheet.

     EPA proposed to require specific benchmark monitoring for Sectors I, P, and R. See Parts 8 and 4.2.1.1 of the proposed permit and the proposed Fact Sheet.

     EPA evaluated options for developing a benchmark for polycyclic aromatic hydrocarbons (PAHs). After conducting the cost analysis for the proposed permit for three options, EPA concluded in the proposal that COD was the most cost-effective option as a surrogate for PAHs, and since COD was already being proposed under the new "universal benchmark monitoring," no additional monitoring for PAHs was explicitly proposed. However, EPA requested comment on information and data related to specific sectors with petroleum hydrocarbon exposure that can release PAHs, any concentrations of individual PAHs and/or total PAHs at industrial sites, and the correlation of PAHs and COD. EPA indicated that it may consider additional monitoring for PAHs in the final permit if it received sufficient information to develop an appropriate benchmark threshold. For a full discussion and detailed analysis of the options and the costs, see Part 4.2.1.2 of the proposed Fact Sheet and Section E.3 of the proposed Cost Impact Analysis in the docket.

   - **EPA Final MSGP:** As described above, the 2021 MSGP requires certain operators to conduct "report only" indicator analytical monitoring for three parameters - pH, TSS, and COD - quarterly for the duration of the permit. Evaluation of these data will inform future consideration of any benchmark monitoring. The 2021 MSGP also includes a new provision that requires certain operators to conduct "report-only" indicator analytical monitoring for PAHs bi-annually (twice per year) during their first and fourth years of permit coverage. This requirement applies to the following operators: operators in all sectors with stormwater discharges from paved surfaces that will be sealed or re-sealed with coal-tar sealcoat where industrial activities are located during coverage under this permit; operators in sectors A (facilities that manufacture, use, or store creosote or creosote-treated wood in areas that are exposed to precipitation), C (SIC Code 2911), D, F, H, I, M, O, P (SIC Codes 4011, 4013, and 5171), Q (SIC Code 4491), R, and S. EPA plans to use the indicator monitoring data collected to conduct an initial quantitative assessment of the levels of PAHs in industrial stormwater, further identify industrial activities with the potential to discharge PAHs via stormwater, and inform future consideration of PAH benchmark monitoring for sectors with the potential to discharge PAHs via stormwater. See Part 4.2.1 of the permit and this fact sheet.

EPA is not finalizing Appendix Q in the 2021 MSGP. Instead, EPA maintains the existing industrial stormwater fact sheet series as guidance. In the 2021 MSGP, after AIM Level 2 is triggered, the Level 2 response requires the operator to generally implement additional pollution prevention/good housekeeping measures. EPA encourages facilities to consult the existing MSGP industrial stormwater fact sheet series for guidance on recommended stormwater control measures appropriate to comply with AIM Level 2. EPA plans to work with external stakeholders to thoroughly revise the sector-specific fact sheets.

3. **NRC recommendation:** EPA should update the MSGP industrial-sector classifications so that requirements for monitoring extend to nonindustrial facilities with activities similar to those currently covered under the MSGP.

   - **EPA Proposed MSGP:** Prior to the issuance of the 1995 MSGP, EPA performed an analysis of industrial sources not covered under the stormwater Phase I rule to determine whether any such industries should be covered under the 1999 stormwater Phase II rule (Report to Congress, March 1995, EPA 833-K-94-002). Ultimately, no new industrial sources were included in the stormwater Phase II rulemaking. While EPA recognizes the benefits of the recommendation to cover facilities with activities similar to those already covered by the MSGP, such an expansion would require a separate regulatory action to modify the definition of “stormwater discharges associated with industrial activity” in 40 CFR 122.26(b)(14) and is outside of the scope of this permit. Additionally, in Sector AD, the MSGP covers other stormwater discharges designated by the Director as needing a permit (see 40 CFR 122.26(a)(9)(i)(C) & (D)) or any facility discharging stormwater associated with industrial activity not described by any of Sectors A-AC.
   - **EPA Final MSGP:** The 2021 MSGP does not cover any new industrial sources beyond those named in 40 CFR 122.26(b)(14).

4. **NRC recommendation**: Benchmarks should be based on the latest toxicity criteria designed to protect aquatic ecosystems from adverse impacts from short-term or intermittent exposures, which to date have generally been acute criteria.

   - **EPA Proposed MSGP:** EPA proposed to update the benchmark thresholds for cadmium; leave the benchmark threshold for aluminum as it was in the 2015 MSGP; remove benchmark thresholds for magnesium and iron; and requested comment on the benchmark thresholds for selenium, arsenic, and copper. See Parts 4.2.1.2 and 8 of the proposed Fact Sheet.
   - **EPA Final MSGP:** EPA modified the benchmark monitoring thresholds in the 2021 MSGP for aluminum, copper for discharges to freshwater, selenium for discharges to freshwater, and cadmium based on revised CWA section 304(a) national recommended aquatic life water quality criteria and suspended the benchmark monitoring thresholds for magnesium and iron based on lack of documented acute toxicity. The 2021 MSGP is also allowing operators who exceed the revised benchmark thresholds for discharges to freshwater for aluminum and copper to demonstrate to EPA that their discharges do not result in an exceedance of a facility-specific value calculated by the operator using the national recommended water quality criteria multi-variable models in-lieu of the applicable MSGP benchmark threshold. See Parts 4.2.2 and 8 of the permit and this fact sheet.

5. **NRC recommendations:**

   - Additional monitoring data collection on the capacity of stormwater control measures (SCMs) to reduce industrial stormwater pollutants is recommended to inform periodic reviews of the benchmark thresholds and identify sectors for which new national effluent limits could help address treatment attainability.

  - Because of the paucity of rigorous industrial SCM performance data, the NRC did not recommend the development of new numeric effluent limitations (NELs) for any specific sector based on existing data, data gaps, and the likelihood of filling them.

- **EPA Proposed MSGP:** EPA acknowledges that a more complete and robust dataset is needed to establish NELs for industrial stormwater in an NPDES general permit. NELs are determined only on an industry-by-industry basis (or subsector-by-subsector) and require discharge pollutant levels corresponding to specific control measures. Many samples are needed because of the high variability (i.e., coefficients of variation) for industrial stormwater (which is much greater than for drinking water and wastewater). The benchmark monitoring data that are currently collected in the MSGP are not suitable or sufficient for determining NELs, which are reviewed and developed through the effluent guidelines planning and development process. See https://www.epa.gov/eg/effluent-guidelines-plan. NRC notes that the MSGP as an NPDES general permit is not the appropriate vehicle for collecting the rigorous performance monitoring data which is necessary to develop new NELs based on the capabilities of treatment technology and other on-site stormwater management practices. While EPA recognizes the importance and utility of NELs, the MSGP benchmark monitoring requirements were designed to be as least burdensome as possible for operators while still providing the intended utility: a tool to for determining whether operators could have SWPPP/stormwater control measure deficiencies. Generally, NELs are feasible only where predictably reliable treatment technologies (as opposed to standard pollution prevention SCMs other than product substitution) are employed. Where standard SCMs provide adequate water quality protection, NELs may be unnecessary. Some of the requisite components of a stormwater monitoring program that are sufficient to characterize a discharge and to accommodate the development of NELs include the following:
  - Rainfall monitoring in the drainage area (rate and depth, at least at two locations);
  - Flow monitoring at the discharge point (calibrated with known flow or using dye dilution methods);
  - Flow-weighted composite sampling, with sampler modified to accommodate a wide range of rain events;
  - Water quality sonde to obtain high-resolution and continuous measurements of such parameters as turbidity, conductivity, pH, oxidation reduction potential, dissolved oxygen (DO), and temperature (recommended);
  - Preparation of adequate experimental design that quantifies the needed sampling effort to meet the data quality objectives (adequate numbers of samples in all rain categories and seasons); and
  - Selection of constituents that meet monitoring objectives.

  Additionally, operators cannot be compelled to collect additional detailed performance data for common SCMs under typical stormwater conditions, as this would be very complicated to do in context of a permit and possibly expensive for operators in balance with other proposed requirements.

- **EPA Final MSGP:** The 2021 MSGP does not require any additional monitoring that is specific to SCM performance data collection. As described in Part 4.2.2, existing benchmark monitoring requirements are primarily intended to provide the operator with data to determine the overall effectiveness of their stormwater control measures and to assist in determining when additional action(s) may be necessary to comply with the effluent limitations in Part 2.

NRC Recommendations on Stormwater Sampling and Data Collection

1. **NRC recommendation:** EPA should update and strengthen industrial stormwater monitoring, sampling, and analysis protocols and training to improve the quality of monitoring data.

   - **EPA Proposed MSGP:** EPA has an existing guide on industrial stormwater monitoring and sampling, which can be found at https://www3.epa.gov/npdes/pubs/msgp_monitoring_guide.pdf. The guide explains how to conduct visual and analytical monitoring of stormwater discharges and can be used by facilities required to comply with the MSGP's monitoring requirements as well as facilities subject to state-issued NPDES industrial stormwater permits. EPA indicated that the Agency may consider updating this guidance as a separate activity from the permit proposal. Although EPA recognizes the benefits of developing a new comprehensive industrial stormwater training or professional certificate program, establishing such a program would require significant time, resources, and indefinite EPA staff commitment, and is outside the scope of the permit and capabilities of EPA's industrial stormwater program at this time.
   - **EPA Final MSGP:** EPA intends to update the existing guide on industrial stormwater monitoring and sampling referenced above to be in line with the 2021 MSGP.

2. **NRC recommendation:** EPA should allow and promote the use of composite sampling for benchmark monitoring for all pollutants except those affected by storage time.

   - **EPA Proposed MSGP:** EPA proposed an explicit clarification that composite sampling is allowed for benchmark monitoring. See Part 4.1.4 of the proposed permit and the proposed Fact Sheet.
   - **EPA Final MSGP:** For the final 2021 MSGP, EPA clarifies that composite sampling for indicator monitoring and benchmark monitoring is explicitly allowed for all pollutants except in limited circumstances. See Part 4.1.4 of the final permit and this Fact Sheet.

3. **NRC recommendation:** Quarterly stormwater event samples collected over 1 year are inadequate to characterize industrial stormwater discharge or describe industrial SCM performance over the permit term.

   - **EPA Proposed MSGP:** As part of the proposed "universal benchmark monitoring" for pH, TSS, and COD for all facilities in Part 4.2.1.1 of the proposed permit, EPA proposed that facilities monitor and report for these three parameters on a quarterly basis for the entire permit term, regardless of any benchmark threshold exceedances, to ensure facilities have current indicators of the effectiveness of their stormwater control measures throughout the permit term. See Part 4.2.1.2 of the proposed permit and the proposed Fact Sheet.
   - **EPA Final MSGP:** For the final 2021 MSGP, EPA requires certain operators to conduct indicator monitoring for pH, TSS, and COD quarterly for the duration of the permit. See Part 4.2.1 of the final permit and this Fact Sheet. Additionally, for the 2021 MSGP, EPA requires that applicable operators conduct benchmark monitoring quarterly in their first and fourth years of permit coverage. The extended benchmark monitoring schedule under the 2021 MSGP will ensure that operators have current data on their industrial stormwater discharges and stormwater control measure effectiveness throughout their permit coverage and will help identify any adverse effects from modifications in facility operations and personnel over time. See Part 4.2.2.3 of the final permit and this Fact Sheet.

4. **NRC recommendation:** State adoption of national laboratory accreditation programs for the Clean Water Act with a focus on the stormwater matrix and interlaboratory calibration efforts would improve data quality and reduce error.

- **EPA Proposed MSGP:** EPA has existing guidance on laboratory procedures and quality assurance in the NPDES Compliance Inspection Manual (January 2017), which can be found at https://www.epa.gov/sites/production/files/2017-01/documents/npdesinspect.pdf. Because this guidance is relatively recent, EPA has no plans to further update it at this time.
- **EPA Final MSGP:** EPA reiterates that the Agency has no current plans to further update the existing guidance referenced above.

5. **NRC recommendation:** To improve stormwater data quality while balancing the burden of monitoring, EPA should expand its tiered approach to monitoring within the MSGP, based on facility risk, complexity, and past performance.

   - **EPA Proposed MSGP:** EPA proposed to have the following tiered approach to monitoring: 1) a possible "inspection-only" option in lieu of benchmark monitoring available to low-risk facilities (see Part 4.2.1.1 of the proposed permit and the proposed Fact Sheet and associated request for comment in that Part); 2) require new "universal benchmark monitoring" for pH, TSS, and COD; 3) continue existing benchmark monitoring requirements from the 2015 MSGP; and 4) require continued benchmark monitoring as part of the proposed AIM requirements for repeated benchmark exceedances. See Parts 4.2 and 5.2 in the proposed permit and the proposed Fact Sheet.

     EPA also considered an "inspection-only" option as an alternative to benchmark monitoring for low-risk facilities. EPA acknowledges the benefits of an in-person inspection and aims to provide flexibility in the permit, where appropriate. EPA requested comment on whether the permit should include an "inspection-only" option, ways to identify eligible low-risk facilities, what frequency would be appropriate for such an inspection, what the inspection should entail, and what qualifications or certifications an inspector should have. Based on the information received during the comment period for the proposed permit, the Agency indicated that it may include this option in the final permit. For a full discussion and detailed analysis of this option and the costs, see the proposed Fact Sheet Part 4.2.1.1 and Section E.5 of the proposed Cost Impact Analysis in the docket.
   - **EPA Final MSGP:** After consideration of public comments, EPA is not finalizing an inspection-only option in the 2021 MSGP. EPA acknowledges the validity of the NRC Study recommendation to provide an alternative compliance option for low-risk facilities; however, the Agency does not currently have sufficient information or a fully-vetted approach to identify which facilities should be considered low-risk. EPA will continue to collect information, including "report only" indicator monitoring data for pH, TSS, and COD required in the 2021 MSGP, to support future consideration of an inspection-only option for low-risk facilities.

6. **NRC recommendation:** To improve the ability to analyze data nationally and the efficiency and capability of oversight by permitting agencies, EPA should enhance electronic data reporting and develop data management and visualization tools.

   - **EPA Proposed MSGP:** EPA recognizes the benefits of improved electronic data reporting and management and continues to work on upgrading its electronic reporting systems and tools with each permit reissuance. EPA proposed that the Agency will consider implementing improved compliance reminders, checks on missing or unusual data, and the possibility of developing a data visualization tool.
   - **EPA Final MSGP:** EPA developed and implemented several new features and advancements for the NPDES eReporting Tool (NeT) for the MSGP so that many activities and communications between operators, the EPA Region, and/or the U.S. Fish and Wildlife

Service (FWS) and the National Marine Fisheries Service (NMFS) (the "Services") that were conducted over email can now be done electronically within NeT-MSGP.

- EPA incorporated into NeT-MSGP several "pre-NOI" activities or eligibility approvals for certain operators that were previously required to be submitted to the applicable EPA Regional Office prior to NOI submission (e.g., for new dischargers to impaired waters in Part 1.1.6.2; the endangered species criterion determination and Criterion C form in Part 1.1.4; the historic properties procedures and criterion determination in Part 1.1.5; and notification of discharges to certain CERCLA sites in Part 1.1.7). To reduce burden, for the 2021 MSGP, an operator now submits that information electronically in NeT-MSGP at the same time they submit the NOI. Where no timeline existed in the previous permit for the "pre-NOI" approvals, EPA now set a 30-day timeframe to review the information submitted by the operator, before the standard 30-day review period begins in NeT-MSGP. This process is intended to streamline all eligibility-related information so that the operator only needs to submit one NOI package and the EPA Region has a comprehensive submission to review in one place.
- EPA also developed a user role for the Services in NeT-MSGP so that review of NOIs, review of endangered species criterion determinations, and communication with the EPA Regional Office can be occur within NeT-MSGP and be tracked with the NOI submission, rather than over emails.
- EPA is also developing a complementary data processing feature in NeT-MSGP that will read submitted benchmark monitoring data in NetDMR to help the operator determine if sampling results indicate that an AIM triggering condition occurred during the quarter and which AIM Level may have been triggered. EPA hopes this feature will help the operator process their benchmark data in a timely manner, comply with any AIM requirements, and help EPA evaluate the impact of the new AIM requirements on benchmark exceedance data over time.

NRC Recommendations on Consideration of Retention Standards in the MSGP

1. **NRC recommendations:**

    a. Rigorous permitting, (pre)treatment, and monitoring requirements are needed along with careful site characterization and design to ensure groundwater protection in industrial stormwater infiltration systems.

    b. Site-specific factors and water quality-based effluent limits render national retention standards for industrial stormwater infeasible within the existing regulatory framework of the MSGP.

    c. EPA should consider incentives to encourage industrial stormwater infiltration or capture and use where appropriate.

- **EPA Proposed MSGP:** EPA acknowledges the importance of protecting groundwater during the use of stormwater infiltration systems. EPA proposed infiltration, where the operator can demonstrate to EPA that it is appropriate and feasible for site-specific conditions, as an alternative or adjunct to structural source controls and/or treatment controls required in proposed Tier 3 AIM responses. See Part 5.2.3.2.b of the proposed permit and the proposed Fact Sheet.
- **EPA Final MSGP:** The 2021 MSGP does not allow infiltration as an alternative to permanent stormwater controls required in AIM Level 3.

2. **NRC recommendation:** EPA should develop guidance for retention and infiltration of industrial stormwater for protection of groundwater.

- **EPA Proposed MSGP:** EPA indicated in the proposed permit that it may develop guidance for retention and infiltration of industrial stormwater after it reviews any existing state or other federal guidance as a separate activity from the permit issuance.
- **EPA Final MSGP:** If EPA does develop guidance for retention and infiltration for industrial stormwater, it will work closely with stakeholders and representatives of state water quality and underground injection control (UIC) agencies to ensure guidance is consistent with groundwater protection regulations, standards, and practices.

IV. Summary of Changes in the 2021 MSGP Compared to the 2015 MSGP

EPA proposed the MSGP for a 90-day comment period from March 2 to June 1, 2020. EPA received 195 total comment letters and 1865 unique comments. Response to comments are discussed in detail in a separate document "2021 MSGP Response to Comments" which can be found in the docket (Docket ID# EPA-HQ-OW-2019-0372).

The 2021 MSGP includes a number of new or modified requirements compared to the 2015 MSGP. The following list summarizes the most significant changes to the MSGP.

1. **Streamlining of Permit** – EPA streamlined and simplified language throughout the permit to present the requirements in a more clear and readable manner. Regarding the structure of the permit, Part 4 (Monitoring) was previously Part 6 in the 2015 MSGP; Part 5 (Corrective Actions and AIM) was previously Part 4 in the 2015 MSGP; and Part 6 (SWPPP) was previously Part 5 in the 2015 MSGP. In EPA's view, formatting the permit in this new order (Monitoring, followed by Corrective Actions and AIM, then SWPPP requirements) provides the information in a more sequential way as the latter parts often refer back to requirements in previous parts of the permit. This new structure should enhance understanding of and compliance with the permit's requirements. EPA also made additional edits to improve permit readability and clarity. EPA revised the wording of many eligibility requirements to be an affirmative expression of the requirement instead of assumed ineligibility unless a condition was met. For example, Part 1.1.6.2 reads "If you discharge to an 'impaired water'…you must do one of the following:". In comparison, the 2015 MSGP read "If you are a new discharger or a new source…you are ineligible for coverage under this permit to discharge to an 'impaired water' … unless you do one of the following:". EPA also numbered permit conditions that were previously in bullet form to make it easier to follow and reference the permit conditions. Finally, the language of the permit was changed from passive to active voice where appropriate (e.g., "Samples must be collected…" now reads "You must collect samples…").
2. **Public Sign of Permit Coverage** – The 2021 MSGP includes a new requirement that MSGP operators must post a sign of permit coverage (except in the instance where other laws or local ordinances prohibit such signage) at a safe, publicly accessible location in close proximity to the facility, as other NPDES permittees are required to do. This notice must include basic information about the facility (e.g., the NPDES ID number), information that informs the public on how to request the facility's Stormwater Pollution Prevention Plan (SWPPP), and how to contact the facility and EPA if stormwater pollution is observed in the stormwater discharge. See Part 1.3.5.
3. **Consideration of Stormwater Control Measure Enhancements for Major Storm Events** – The 2021 MSGP requires that operators consider implementing enhanced stormwater control measures for facilities that could be impacted by major storm events, such as hurricanes, storm surge, and flood events. EPA is not requiring operators to implement additional controls if the operator determines such controls to be unnecessary, but EPA is requiring operators to consider the benefits of selecting and designing control measures that reduce risks to their industrial facility and the potential impact of pollutants in stormwater discharges caused by major storm events. See Part 2.1.1.8.

4. Monitoring Changes

- **Indicator Monitoring for pH, TSS, and COD –** The 2021 MSGP includes a new provision that requires certain operators to conduct indicator analytical monitoring for three parameters - pH, Total Suspended Solids (TSS), and Chemical Oxygen Demand (COD) - quarterly for the duration of the permit. This requirement applies to all operators in the following subsectors that do not have sector-specific benchmark monitoring requirements in the 2021 MSGP: B2, C5, D2, E3, F5, I1, J3, L2, N2, O1, P1, R1, T1, U3, V1, W1, X1, Y2, Z1, AB, AC, and AD. For this permit, indicator monitoring is "report-only" and does not have a threshold or baseline value for comparison nor does it require follow-up actions under this part. The requirement in Part 2.2.1 to meet applicable water quality standards still applies. These three parameters will provide operators and EPA with a baseline and comparable understanding of industrial stormwater discharge quality, broader water quality problems, and stormwater control measure effectiveness at these facilities. See Part 4.2.1.
- **Indicator monitoring for Polycyclic Aromatic Hydrocarbons (PAHs) –** The 2021 MSGP includes a new provision that requires certain operators to conduct "report-only" indicator analytical monitoring for polycyclic aromatic hydrocarbons (PAHs) bi-annually (twice per year) during their first and fourth years of permit coverage. This requirement applies to the following operators: operators in all sectors with stormwater discharges from paved surfaces that will be sealed or re-sealed with coal-tar sealcoat where industrial activities are located during coverage under this permit; operators in sectors A (facilities that manufacture, use, or store creosote or creosote-treated wood in areas that are exposed to precipitation), C (SIC Code 2911), D, F, H, I, M, O, P (SIC Codes 4011, 4013, and 5171), Q (SIC Code 4491), R, and S.

  Indicator monitoring is "report-only" and does not have a benchmark threshold or baseline value for comparison nor does it require follow-up actions under Part 4.2.1.1.b. As with any pollutant monitored under the MSGP, the requirement in Part 2.2.1 to meet applicable water quality standards still applies. EPA determined that the sectors and activities listed above are likely to have industrial activities with potential petroleum hydrocarbon exposure to precipitation that could result in the discharge of PAHs in stormwater based on a review of EPA's sector-specific fact sheets and a detailed literature review included in the docket for this permit (ID# EPA-HQ-OW-2019-0372).

  PAH monitoring data will provide operators and EPA with a baseline and comparable understanding of industrial stormwater discharge quality with respect to discharges of PAHs at these facilities. EPA plans to use the indicator monitoring data collected to conduct an initial quantitative assessment of the levels of PAHs in industrial stormwater, further identify industrial activities with the potential to discharge PAHs in stormwater, and inform future consideration of potential PAH benchmark monitoring for sectors with the potential to discharge PAHs in stormwater. See Part 4.2.1.
- **Updating Benchmark Threshold Values –** EPA modified the benchmark monitoring thresholds in the 2021 MSGP for aluminum, copper for discharges to freshwater, selenium for discharges to freshwater, and cadmium based on revised current CWA section 304(a) national recommended aquatic life water quality criteria and suspended the benchmark monitoring thresholds for magnesium and iron based on lack of documented acute toxicity. The 2021 MSGP is also allowing operators who exceed the revised benchmark thresholds for discharges to freshwater for aluminum and copper to demonstrate to EPA that their discharges do not result in an exceedance of a facility-specific value calculated by the operator using the national recommended water quality criteria multi-variable models in-lieu of the applicable MSGP benchmark threshold. See Parts 4.2.2 and 8.
- **Updating the Benchmark Monitoring Schedule –**The 2021 MSGP requires that applicable operators conduct benchmark monitoring quarterly in their first and fourth years of permit

coverage. Benchmark monitoring begins in the first full quarter of permit coverage for four quarters. In the 2015 MSGP, an operator that did not exceed the four-quarter annual average for a given parameter in the first four quarters of permit coverage could discontinue benchmark monitoring for that parameter for the remainder of the permit. Under the 2021 MSGP, an operator that does not exceed the four-quarter annual average for a given parameter in the first four quarters of permit coverage can now discontinue benchmark monitoring for that parameter for the next two years (i.e., the next eight quarters).

Quarterly benchmark monitoring then resumes for all parameters for another four quarters in the fourth year of permit coverage, and if the operator does not exceed the four-quarter annual average for a given parameter, it can discontinue benchmark monitoring for that parameter for the remainder of their permit coverage. If, during either the first or fourth year of monitoring, the annual average for any parameter exceeds the benchmark threshold, the operator must comply with Part 5 (Additional Implementation Measures responses and deadlines), and continue quarterly benchmark monitoring for four quarters until results indicate that annual average for the parameter(s) is no longer exceeded. Under the new schedule, regardless of when the operator discontinued monitoring for any benchmark parameter, monitoring resumes for all parameters for four quarters in the fourth year of permit coverage, unless the permit has already expired. It is possible that an operator with continued benchmark exceedances in years 2 and 3 of permit coverage will be required to continue monitoring through their second and third years of permit coverage. In the scenario where the operator receives results in their third year of permit coverage that the benchmark threshold is no longer exceeded, the operator is still required to monitor again in their fourth year of permit coverage.

The principle underpinning this schedule is that the relief period from benchmark monitoring between the first and fourth years decreases if benchmark exceedances continue and additional monitoring is required. During this time, operators may also be conducting continued benchmark monitoring in compliance with AIM for certain parameters that have ongoing exceedances. The extended benchmark monitoring schedule under the 2021 MSGP will ensure that operators have current data on their industrial stormwater discharges and stormwater control measure effectiveness throughout their permit coverage and will help identify potential adverse effects from modifications in facility operations and/or personnel over time. See Part 4.2.2.3.

- **Impaired Waters Monitoring –** Under the 2021 MSGP, operators discharging to impaired waters without an EPA-approved or -established TMDL must complete annual monitoring for discharges of certain pollutants to impaired waters. Impaired waters monitoring begins in the first year of permit coverage, starting in the first full quarter of permit coverage. Monitoring is required for one year at each discharge point for all pollutants for which the waterbody is impaired, just as in the 2015 MSGP, after which the operator can discontinue monitoring for the next two years for any pollutant that is not detected. Annual monitoring must continue for any pollutant for which the waterbody is impaired that is detected in the discharge. Required annual monitoring then resumes in the fourth year of permit coverage for one year for those pollutants that are both causing impairments and are associated with the industrial activity and/or are a required benchmark parameter for the operator's subsector(s), including any pollutant(s) for which the operator previously discontinued monitoring. After monitoring in the fourth year of permit coverage is completed, the operator can discontinue monitoring for the duration of their permit coverage for any pollutant that is not detected. Again, annual monitoring must continue for any pollutant for which the waterbody is impaired that is detected in the discharge. For waters identified as impaired by acidity or heat, annual monitoring must continue where the measured pH or temperature exceeds the range of acceptable values assigned to the water consistent with applicable water quality standards. The extended impaired waters monitoring schedule under the 2021 MSGP will ensure that operators affirmatively determine in their first year of permit coverage that a parameter causing an impairment is not present at the facility before narrowing the list of monitored parameters in the fourth year. The updated schedule ensures operators periodically check on their potential contributions to impairments in their industrial stormwater discharges throughout their permit coverage. See Part 4.2.5.1.

- **Additional Implementation Measures (AIM)** –The 2021 MSGP includes revisions to the Additional Implementation Measures (AIM) requirements for benchmark monitoring exceedances that were included in the proposed 2020 MSGP. EPA revised these provisions to address concerns raised in public comments. Both the proposed 2020 MSGP and this final 2021 MSGP maintain a three-level structure of advancement and responses triggered by benchmark exceedances and keep follow-up actions clear, timely, and proportional to exceedance frequency and duration. The final 2021 MSGP AIM requirements reduce costs and complexity from the proposal by creating stepwise, sequential advancement through the AIM levels with clear "resetting" to baseline status if benchmark thresholds and responses are met within the required deadlines. The other corrective action conditions, subsequent action deadlines, and documentation requirements in Part 5.1 remain the same as in the 2015 MSGP.

  In Part 5.2, AIM is triggered by an exceedance of a benchmark monitoring parameter, which can occur from two "triggering events": either an exceedance of the four-quarterly annual average for a parameter, or from fewer than four quarterly samples if a single sample or the sum of any sample results within the sampling year exceeds the benchmark threshold by more than four times for a parameter (this result indicates that an exceedance of the annual average is mathematically certain).

  There are three AIM levels in the 2021 MSGP: AIM Level 1, Level 2, and Level 3. All operators subject to benchmark monitoring requirements begin in baseline status at the start of their permit coverage. An operator would progress linearly through the three AIM levels if an exceedance triggering event occurs and continues. If an exceedance triggering event occurs while in baseline status, an operator would enter AIM Level 1. If a triggering event occurs while in Level 1, an operator proceeds to AIM Level 2. If a triggering event occurs while in Level 2, an operator proceeds to AIM Level 3. The operator is required to respond with increasingly robust control measures and continued benchmark monitoring with each subsequent AIM level.

  After an exceedance triggering event occurs, an operator must continue quarterly monitoring for the parameter(s) that caused the AIM triggering event at all affected discharge points, until four additional quarters of monitoring do not result in an exceedance triggering event. The deadlines for implementing AIM responses remains the same as in the proposed permit for Levels 1 and 2 (within 14 days of receipt of lab results, unless infeasible, then within 45 days). The deadline for Level 3 has been extended to allow time for scheduling and completing installation of stormwater controls (identify the schedule for installing controls within 14 days; install controls within 60 days, unless infeasible, then within 90 days). EPA may grant an extension to the deadlines for AIM Level 2 and AIM Level 3 based on an appropriate demonstration by the operator as outlined in Parts 5.2.4.2 (AIM Level 2 Deadlines) and 5.3.5.2 (AIM Level 3 Deadlines).

  The following five exceptions to the AIM requirements are available for an exceedance triggering event at any AIM level: 1) natural background sources, 2) run-on, 3) a one-time abnormal event, 4) a demonstration that discharges of copper and aluminum do not result in an exceedance of facility-specific criteria using the national recommended water quality criteria in-lieu of the applicable MSGP benchmark threshold, and 5) a demonstration that the benchmark exceedance does not result in any exceedance of an applicable water quality standard. AIM requirements increase regulatory certainty while ensuring that discharges are sufficiently controlled to protect water quality. See Part 5.2.

- **Topics not finalized in the 2021 MSGP** – After considering comments received, the following topics that EPA contemplated in the proposed 2020 MSGP were not finalized in the 2021 MSGP:
  - Expanding permit eligibility requirement for discharges to a federal CERCLA site beyond EPA Region 10 (EPA has added that such facilities notify the EPA Region 10 Office a minimum of 30 days in advance of submitting the NOI form);
  - Adding an eligibility criterion regarding coal-tar sealcoat; modifying permit authorization related to a pending enforcement action;
  - Providing an inspection-only option in lieu of benchmark monitoring; requiring sector-specific benchmark monitoring for Sector I (Oil and Gas Extraction), Sector P (Land Transportation and Warehousing), and Sector R (Ship and Boat Building and Repair Yards); modifying the method for determining natural background pollutant contributions from the 2015 MSGP; and
  - including the use sector-specific stormwater control measures from Appendix Q.

V. Geographic Coverage of this Permit

The 2021 MSGP provides coverage for classes of point source discharges to waters of the United States in jurisdictions not covered by an approved state NPDES program. The areas of geographic coverage of the 2021 MSGP are listed in Appendix C and include the states of Idaho, Massachusetts, New Hampshire, and New Mexico, as well as all Indian country lands and federal operators in selected states. Permit coverage is also provided in Puerto Rico, the District of Columbia, and the Pacific Island territories.

Note: The expected date for the transfer of NPDES Permitting Authority to Idaho for general stormwater permits, including the EPA's MSGP, is July 1, 2021. EPA will work closely with operators in Idaho to transfer coverage at that time.

Industrial activities on Indian country lands located in Alabama, Florida, Mississippi, North Carolina, South Carolina, and Virginia, and most Indian country lands in New York were not included in the 2015 MSGP but are included in the 2021 MSGP.

VI. Categories of Facilities That Can Be Covered Under this Permit

The 2021 MSGP is available for stormwater discharges from the following 29 sectors of industrial activity (Sector A – Sector AC), as well as any discharge not covered under the 29 sectors (Sector AD) that has been identified by EPA as appropriate for coverage. The sector descriptions are based on Standard Industrial Classification (SIC) codes and Industrial Activity Codes consistent with the definition of "stormwater discharge associated with industrial activity" at 40 CFR 122.26(b)(14)(i-ix, xi). See Appendix D in the 2021 MSGP for specific information on each sector. The sectors are listed below:

Table VI-1 Categories of Sector That Can Be Covered Under this Permit

Sector A – Timber Products	**Sector P** – Land Transportation
Sector B – Paper and Allied Products Manufacturing	**Sector Q –** Water Transportation
Sector C – Chemical and Allied Products Manufacturing	**Sector R** – Ship and Boat Building or Repairing Yards

Sector D – Asphalt Paving and Roofing Materials Manufactures and Lubricant Manufacturers	**Sector S** – Air Transportation Facilities
Sector E – Glass, Clay, Cement, Concrete, and Gypsum Product Manufacturing	**Sector T** – Treatment Works
Sector F – Primary Metals	**Sector U** – Food and Kindred Products
Sector G – Metal Mining (Ore Mining and Dressing)	**Sector V** – Textile Mills, Apparel, and other Fabric Products Manufacturing
Sector H – Coal Mines and Coal Mining-Related Facilities	**Sector W** – Furniture and Fixtures
Sector I – Oil and Gas Extraction	**Sector X** – Printing and Publishing
Sector J – Mineral Mining and Dressing	**Sector Y** – Rubber, Miscellaneous Plastic Products, and Miscellaneous Manufacturing Industries
Sector K – Hazardous Waste Treatment Storage or Disposal	**Sector Z** – Leather Tanning and Finishing
Sector L – Landfills and Land Application Sites	**Sector AA** – Fabricated Metal Products
Sector M – Automobile Salvage Yards	**Sector AB** – Transportation Equipment, Industrial or Commercial Machinery
Sector N – Scrap Recycling Facilities	**Sector AC** – Electronic, Electrical, Photographic and Optical Goods
Sector O – Steam Electric Generating Facilities	**Sector AD** – Reserved for Facilities Not Covered Under Other Sectors and Designated by the Director

VII. Permit Requirements

Part 1 How to Obtain Coverage Under the 2021 MSGP

Part 1.1 Eligibility Conditions

As with previous permits, to be eligible for coverage under the 2021 MSGP, operators of industrial facilities must meet the eligibility provisions described in Part 1.1 of the permit. If they do not meet all the eligibility requirements, operators may not submit a Notice of Intent (NOI) to be covered by the MSGP, and, unless they obtained coverage for those discharges under another permit, those discharges of stormwater associated with industrial activity needing permit coverage will be in violation of the CWA.

Part 1.1.1 Location of Your Facility

This Part specifies that in order to be eligible for permit coverage, the facility must be located in a jurisdiction where EPA is the permitting authority and where coverage under this permit is available (see Appendix C). The permit also specifies that this condition also applies in the limited circumstances where your facility is located in a jurisdiction where EPA is not the permitting authority but your discharge point location is to a water of the United States where EPA is the permitting authority.

Part 1.1.2 Your Discharges Are Associated with Industrial Activity

This Part specifies that eligible facilities must have an authorized stormwater discharge or an authorized non-stormwater discharge per Part 1.2 associated with industrial activity from the primary industrial activity (as defined in Appendix A and as listed in Appendix D), or have been notified by EPA that they are eligible for coverage under Sector AD.

Part 1.1.3 Limitations on Coverage

This Part describes the limitations on what is covered under this permit. Any discharges not expressly authorized under the 2021 MSGP cannot become authorized or shielded from liability under CWA Section 402(k) by disclosure to EPA, state, or local authorities after issuance of the MSGP via any means, including the NOI to be covered by the permit, the SWPPP, or during an inspection. This is consistent with EPA's long-standing interpretation of the scope of the MSGP.

Part 1.1.3 used to be Part 1.1.4 in the 2015 MSGP. In the 2021 MSGP, EPA focused the "limitations on coverage" section to specific discharges not authorized by the permit. Other eligibility requirements that were previously listed under "limitations on coverage" are now organized under their own headers so it is clearer to the reader what conditions need to be met in order to obtain eligibility. EPA modified the wording of some conditions previously in the 2015 MSGP from the negative to the positive (e.g., instead of using "you are ineligible unless…" EPA changed the phrasing of the condition to "to be eligible, you must…"). EPA hopes this will clarify the eligibility conditions of the permit.

Part 1.1.3.1 Discharges Mixed with Non-Stormwater

The MSGP does not authorize stormwater discharges that are mixed with non-stormwater discharges, other than those mixed with authorized non-stormwater discharges listed in Part 1.2.2 and/or those mixed with a discharge authorized by a different NPDES permit and/or a discharge that does not require NPDES authorization. Where a regulated stormwater discharge is commingled with non-stormwater that is not authorized by the MSGP, the operator must obtain authorization under another NPDES permit to discharge the commingled discharge.

Part 1.1.3.2 Stormwater Discharges Associated with Construction Activity

The 2021 MSGP does not apply to stormwater discharges associated with construction activity, defined in 40 CFR 122.26(b)(14)(x) and (b)(15), which acknowledges the distinction between construction and other types of stormwater discharges associated with industrial activity. An exception to this is for construction associated with mining activities, where operators in Sectors G, H and J are able to cover earth-disturbing activities in the MSGP in lieu of obtaining separate coverage under the Construction General Permit (CGP) (EPA included the salient earth disturbance-related requirements for the mining sectors in Part 8). However, for mining-related construction that disturbs less than one acre in size, such discharges are covered by the regular MSGP (i.e., the requirements that are not expressly for earth-disturbances). The mining-related construction exception provides a more streamlined approach for mining operators preferring to be covered by one permit, instead of two.

Part 1.1.3.3 Discharges Already Covered by Another Permit

This provision describes cases where an operator is ineligible for coverage under the MSGP because their industrial stormwater discharges are covered under another NPDES permit. The objective is to avoid conflict with the anti-backsliding provisions of the CWA. The cases this applies to include operators currently covered under an individual NPDES permit or an alternative NPDES general permit; discharges covered by an individual NPDES permit or alternative NPDES general permit within the past five years prior to the effective date of the 2021 MSGP, which established site-specific numeric water quality-based effluent limitations developed for the stormwater component of the discharge; or discharges from facilities where any NPDES permit has been or is in the process of being denied, terminated (permit termination does not refer to the routine expiration and reissuance of NPDES permits every five years), or revoked by EPA.

Part 1.1.3.4 Stormwater Discharges Subject to Effluent Limitations Guidelines

This section specifies that only the discharges from facilities subject to the stormwater-specific effluent limitations guidelines in Table 1-1 of the permit are eligible for coverage under this permit. All other stormwater and non-stormwater discharges subject to effluent limitations guidelines must be covered under any applicable alternate NPDES general permit or an individual NPDES permit.

Part 1.1.4 Eligibility related to Endangered Species Act (ESA) Listed Species and Critical Habitat Protection

The Endangered Species Act (ESA) of 1973 requires all Federal Agencies to ensure, in consultation with the U.S. Fish and Wildlife Service (FWS) and the National Marine Fisheries Service (NMFS) (the "Services"), that any federal action carried out by the Agency is not likely to jeopardize the continued existence of any species that is federally-listed as endangered or threatened ("listed"), or result in the adverse modification or destruction of habitat of such species determined to be critical habitat. See 16 U.S.C. 1536(a)(2), 50 CFR 402 and 40 CFR 122.49(c).

EPA developed the requirements of Part 1.1.4 in consultation with the Services to ensure that discharges covered under the permit are protective of listed species and their critical habitats. The criteria in Appendix E require the operator to determine that their facility's stormwater discharges, authorized non-stormwater discharges, and stormwater discharge-related activities were either the subject of a separate ESA consultation or an ESA Section 10 permit, or are not likely to adversely affect any listed species or critical habitat under the ESA. To make this determination for the 2021 MSGP, operators must follow the questions outlined in ESA worksheet section of the NOI in EPA's NPDES eReporting Tool for the MSGP (NeT-MSGP), based on the steps in Appendix E. New to the 2021 MSGP, operators can determine their ESA eligible criterion in NeT-MSGP at the same time they prepare their NOI.

For the 2021 MSGP, EPA moved the list of detailed ESA criteria only in Appendix E of the permit and removed the criteria list from the permit text and fact sheet. EPA is concerned that operators may just read the list of criteria in the permit and try to determine just from that list which applies to their facility. Directing operators to the "smart" ESA worksheet section in the NOI in EPA's NeT-MSGP based on Appendix E ensures that operators read the important instructions and procedures for how they should determine their ESA eligibility criterion.

EPA made some revisions to the criteria in Appendix E to better ensure that the criteria are adequately protective of listed species and their critical habitats and to improve clarity of the eligibility process. The changes are summarized below.

- **Criterion A (No ESA-listed species and/or critical habitat present in action area)** – No significant changes to the criterion. Details were added on the appropriate basis statement supporting the selection of the criterion.
- **Criterion B (Eligibility requirements met by another operator under the 2021 MSGP)** – No significant changes to the criterion. Details were added on the appropriate basis statement supporting the selection of the criterion.
- **Criterion C (ESA-listed species and/or designated critical habitat likely to occur, but discharges not likely to adversely affect them)** – Criterion C is now broken into three sub-criterion depending on whether the operator was eligible under Criterion C in the previous permit. EPA added two additional scenarios under which Criterion C could apply to streamline the process for existing operators:
    1. **Criterion C1:** Allows the eligibility of a facility that was previously covered under the 2015 MSGP under Criterion C as long as there have been no changes to the action area and no additional ESA-listed species or designated critical habitat within the action area since the operator submitted the certification under the 2015 MSGP. Operators that are eligible under C1 do not have to resubmit a Criterion C form, but must provide in the NOI in NeT-MSGP the USFWS and/or NMFS resources consulted that helped the operator determine that no additional species and/or critical habitat have been listed by the Services in the action area;
    2. **Criterion C2:** Allows the eligibility of a facility that was previously covered under the 2015 MSGP under Criterion C and there have been changes to the action area and/or additional ESA-listed species or designated critical habitat listed since the operator submitted certification under the 2015 MSGP. Operators that are eligible under C2 do not have to resubmit a Criterion C form, but are required to provide in the NOI in NeT-MSGP a description of the changes to the action area and/or the ESA-listed species or critical habitat. NOIs for operators that certify under C2 will be held for review for 30-days prior to the standard 30-day review period for all NOIs, as with the previous Criterion C eligibility process under the 2015 MSGP.
    3. **Criterion C3:** The permit retains the scenario previously included in the 2015 MSGP to allow a facility without previous MSGP coverage to certify eligibility under criterion C of the 2021 MSGP if it has ESA-listed species or designated critical habitat in the action area. Operators that are eligible under C3 must follow the questions outlined in Criterion C portion of the NOI in NeT-MSGP, based on the steps in Appendix E. New to the 2021 MSGP, operators can prepare and submit their Criterion C form in NeT-MSGP at the same time they prepare their NOI. NOIs for operators that certify under C3 will be held for review for 30-days prior to the standard 30-day review period for all NOIs, as with the previous Criterion C eligibility process under the 2015 MSGP. This change was made so that operators do not need to submit this information to EPA ahead of NOI submission and can send all necessary information to EPA at one time.

The 2021 MSGP also includes minor updates to Criteria C Form Section V "Evaluation of Discharge Effects." EPA added "stormwater discharges may adversely affect the immediate vicinity of the discharge point through streambank erosion and scour" to Hydrological Effects. EPA added "due to exposures to multiple stressors at the same time" to the description of Toxicity of Pollutants. EPA also added "I comply with the applicable monitoring requirements and have not had any exceedances" to Criteria C Eligibility Form Section V.B.

- **Criterion D (ESA Section 7 consultation has successfully concluded) -** EPA eliminated the option that consultation resulted in a biological opinion that concludes that the action is likely to jeopardize listed species or to result in the destruction or adverse modification of critical habitat, and any recommended reasonable and prudent alternatives or reasonable and prudent measures are being implemented. Details were added on the appropriate basis statement supporting the selection of the criterion.
- **Criterion E (Issuance of ESA Section 10 permit)** - no significant changes to the criterion. Details were added on the appropriate basis statement supporting the selection of the criterion.

Part 1.1.5 Eligibility Related to National Historic Preservation Act (NHPA)-Protected Properties

Coverage under the 2021 MSGP is available only if operators certify that they meet one of the eligibility criteria related to compliance with historic properties protection pursuant to the National Historic Preservation Act (NHPA). These criteria are used to identify whether land disturbances associated with the installation or revision of subsurface stormwater control measures would affect properties listed in, or eligible for listing in, the National Register of Historic Properties; and, if so, to determine the measures that will prevent or mitigate adverse effects to the properties.

EPA does not anticipate any effects on historic properties from the pollutants in the stormwater discharges covered by the 2021 MSGP. However, existing and new operators could undertake activities in connection with the 2021 MSGP that might affect historic properties if they install new or modify stormwater control measures that involve subsurface disturbance. The overwhelming majority of sources covered under the 2021 MSGP will be operators that are seeking renewal of previous permit coverage. If these existing dischargers are not planning to construct new stormwater controls or conveyance systems, they have already addressed NHPA issues. In the 2015 MSGP, operators were required to certify that they were either not affecting historic properties or they had obtained written agreement from the applicable State Historic Preservation Officer (SHPO), Tribal Historic Preservation Officer (THPO), or other tribal representative regarding methods of mitigating potential impacts. EPA is not aware of any adverse effects on historic properties under the 2015 MSGP, nor the need for a written agreement with a SHPO or THPO. Therefore, to the extent the 2021 MSGP authorizes renewal of prior coverage without relevant changes in operation, it has no potential to affect historic properties.

Where operators install or modify control measures that involve subsurface disturbance, the area of potential effect (APE) for the activities performed to comply with the permit, for historic preservation purposes, is limited to the location and depth of the earth disturbance associated with the installation or modification of the stormwater control measures. Operators need only consider the APE when doing the historic properties screening procedures to determine their eligibility criteria in Appendix F. This is the only scenario where activities authorized or undertaken in connection with the 2021 MSGP may affect historic properties. Since both new and existing dischargers could undertake such activities, all operators are required to follow the historic property screening procedures to document eligibility. Historic preservation requirements are unchanged from 2015, however, new to the 2021 MSGP, operators must follow the questions outlined in the historic properties worksheet section of the NOI in NeT-MSGP, based on the steps in Appendix F. Operators can prepare and submit their historic properties criterion selection in NeT-MSGP at the same time they prepare their NOI.

Part 1.1.6 Eligibility for "New Dischargers" and "New Sources"[1] (as defined in Appendix A) ONLY:

Part 1.1.6.1 Eligibility for "New Dischargers" and "New Sources" Based on Water Quality Standards

This provision describes permit eligibility for operators of facilities classified as new sources and/or new dischargers (as defined in Appendix A), pursuant to 40 CFR 122.4(i). Facilities classified as "new source" or "new discharger" are not eligible for coverage under the MSGP for any discharges that EPA determines will not be controlled as necessary such that the receiving water of the United States will not meet an applicable water quality standard. EPA may notify such operators that an individual permit application is necessary in accordance with Part 1.3.8, or, alternatively, EPA may authorize coverage under the MSGP after the operators have implemented measures designed to ensure the discharge is controlled as necessary such that the receiving water of the United States will meet water quality standards. EPA notes that while Part 1.1.6.1 is designed to specifically implement 40 CFR 122.4(i), other water quality-based requirements apply to new and existing dischargers. Part 2.2 of the permit includes water quality-based effluent limits applicable to all dischargers, which are designed to ensure that discharges from both new and existing operators are controlled as necessary to meet water quality standards in receiving waters of the United States.

Part 1.1.6.2 Eligibility for "New Dischargers" and "New Sources" for Water Quality-Impaired Waters

Part 1.1.6.2 of the permit requires any new source or new discharger to demonstrate its ability to comply with 40 CFR 122.4(i) (i.e., prohibiting the issuance of permits to new sources and new dischargers that will not be controlled as necessary such that the receiving water of the United States will not meet water quality standards) prior to coverage under the permit. To satisfy the requirements of 40 CFR 122.4(i), an operator must complete one of the following: (a) prevent all exposure to stormwater of the pollutant(s) for which the waterbody is impaired, and retain documentation with the SWPPP on how this was accomplished; (b) submit technical information or other documentation to the applicable EPA Regional Office via NeT-MSGP at the same time the operator prepares and submits the NOI to support a claim that the pollutant(s) for which the waterbody is impaired is not present at the site; or (c) submit data or other technical documentation to the applicable EPA Regional Office via NeT-MSGP at the same time the operator prepares and submits the NOI to support a conclusion that the discharge will be controlled as necessary such that the receiving water or the United States will meet applicable water quality standards. For discharges to waters without a TMDL, the information must demonstrate that the discharge of the pollutant for which the water is impaired will meet water quality standards at the point of discharge to the water of the United States. For discharges to waters with a TMDL, the information must demonstrate that there are sufficient remaining wasteload allocations

---

[1] "New Discharger" means a facility from which there is or may be a discharge, that did not commence the discharge of pollutants at a particular site prior to August 13, 1979, which is not a new source, and which has never received a finally effective NPDES permit for discharges at that site. See 40 CFR 122.2.

"New Source" means any building, structure, facility, or installation from which there is or may be a "discharge of pollutants," the construction of which commenced: i) after promulgation of standards of performance under section 306 of the CWA which are applicable to such source, or ii) after proposal of standards of performance in accordance with section 306 of the CWA which are applicable to such source, but only if the standards are promulgated in accordance with section 306 within 120 days of their proposal. See 40 CFR 122.2.

in the TMDL to allow the discharge and that existing dischargers to the waterbody are subject to compliance schedules designed to bring the waterbody into attainment with water quality standards (e.g., a reserve allocation for future growth). In order to be eligible under Part 1.1.6.2.c, the operator must receive a determination from the applicable EPA Regional Office that the discharge will be controlled as necessary such that the receiving water of the United States will meet applicable water quality standards. If the operator's NOI contains information to satisfy either (b) or (c) above, the NOI will be held for review for 30 days, prior to the standard 30-day review period for all NOIs. This change was made so that operators do not need to submit this information to the EPA Regional Office ahead of NOI submission and can send all necessary information to EPA at one time.

Part 1.1.6.3 Eligibility for "New Dischargers" and "New Sources" for Waters with High Water Quality

Part 1.1.6.3 includes the eligibility requirements for new dischargers or new sources discharging to a Tier 2, 2.5, or 3 water. Operators discharging to Tier 2 or Tier 2.5 waters must not lower the water quality of the water. Coverage under the permit is not available to new dischargers or new sources who discharge to a state- or tribe-designated Tier 3 water (outstanding national resource waters, or "ONRW") for antidegradation purposes. Any such discharges must apply for coverage under an individual permit.

The need for such a provision is that state/tribal water quality standards must include an antidegradation policy. In addition, each state/tribe must identify implementation methods for their policy that, at a minimum, provide a level of protection that is consistent with the three-tiered approach of the federal antidegradation regulation. Tier 3 maintains and protects water quality in ONRWs. Waters classified as ONRWs by states and tribes are generally the highest quality waters of the United States. However, the ONRW classification also offers special protection for waters of exceptional ecological significance (i.e., those that are important, unique, or sensitive ecologically, but do not necessarily have high water quality). Except for certain temporary changes, water quality cannot be lowered in such waters. 40 CFR 131.12(a)(3). Because of their high quality or ecological significance, EPA expects few industrial stormwater discharges into ONRWs will be covered under an NPDES permit. See list of Tier 2, Tier 2.5 and Tier 3 waters in Appendix L.

Part 1.1.7 Eligibility for Stormwater Discharges to Federal CERCLA Sites[2]

In the 2021 MSGP, facilities in EPA Region 10 and Indian country that discharge stormwater to certain specified sites that have undergone or are undergoing remedial cleanup actions pursuant to the Comprehensive Environmental Response, Compensation and Liability Act (CERCLA or Superfund) are required to notify the EPA Region 10 Office in the NOI via NeT-MSGP. If the operator's NOI contains information regarding their eligibility with respect to discharges to a CERCLA site, the NOI will be held for review for 30 days, prior to the standard 30-day review period for all NOIs. This change was made so that operators do not need to submit this information to the EPA Region 10 Office ahead of NOI submission and

---

[2] References:

Burton, G.A. and Pitt, R.E. (2002) Stormwater Effects Handbook. A Tool for Watershed Managers, Scientists and Engineers. Lewis Publishers, CRC Press, Boca Raton.

Burton, G. A. and R. E. Pitt. 2002. Chapter 5: Sampling effort and collection methods. Pp. 224-338 in Stormwater effects handbook: A toolbox for watershed managers, scientists, and engineers, G. A. Burton and R. E. Pitt, eds. Boca Raton, FL: Lewis Publishers.

Chiou, C.T., and Kile, D.E., 2000, Contaminant sorption by soil and bed sediment--Is there a difference?: U.S. Geological Survey Fact Sheet 087-00, 4 p.

can send all necessary information to EPA at one time. EPA evaluated 2015 MSGP NOI data and found that only 12 facilities in Region 10 have been subject to this requirement in the current permit. All facilities were able to get coverage under the MSGP, and only one facility was required to do additional monitoring.

Just as in the 2015 MSGP, in the 2021 MSGP a facility is considered to discharge to a federal CERCLA Site if the discharge flows directly into the site through its own conveyance, or a through a conveyance owned by others, such as a municipal separate storm sewer system. This does not include discharges to a tributary that flows into a CERCLA Site. "CERCLA Site" means a facility as defined in Section 101(9) of CERCLA, 42 U.S.C. § 9601(9), that is undergoing a remedial investigation and feasibility study, or for which a Record of Decision for remedial action has been issued in accordance with the National Contingency Plan at 40 CFR 300. This definition includes sites that have been listed on the National Priorities List in accordance with Section 105 of CERCLA, 42 U.S.C. §9605, or that are being addressed using CERCLA authority, including use of an agreement consistent with the Superfund Alternative Approach Guidance. The federal CERCLA sites to which this provision currently applies are listed in Appendix P.

To determine eligibility for coverage under this Part, the EPA Region 10 Office may evaluate whether the discharger has in place sufficient controls and implementation procedures (e.g., enhanced controls, corrective actions, monitoring requirements, and/or numeric benchmarks or effluent limits) designed to ensure that the discharge will not interfere with achieving the cleanup goals or lead to recontamination of sediments or aquatic media being remediated under CERCLA, such that it causes or contributes to an exceedance of a water quality standard. Such discharges can undo cleanups accomplished and can result in new or continuing impairments of designated uses of the receiving waters. In addition, EPA and potentially responsible parties performing cleanups cannot obtain cost recovery for responding to releases of hazardous substances resulting from federally-permitted discharges that are operating in compliance, so the permitting of industrial stormwater to CERCLA sites creates a barrier to cost recovery.

If following authorization to discharge under the 2021 MSGP, it is determined that a facility discharges stormwater to a CERCLA Site listed in Appendix P, the facility must notify the EPA Region 10 Office. Upon notification, the EPA Region 10 may impose additional monitoring requirements, controls, or other actions to prevent recontamination of the CERCLA Site such that it meets all applicable water quality standard. In order to become eligible, the facility must confirm in writing that it agrees to implement the additional requirements. There are a variety of scenarios under which an MSGP-permitted facility could subsequently determine that it is discharging to an Appendix P CERCLA Site. For example, the facility could become aware of new information regarding the location of its stormwater discharge point or the fate of the stormwater it discharges into a municipal stormwater system. Or the facility could be notified of the fact that it is discharging to an Appendix P CERCLA Site by a potentially responsible party, EPA, or another government agency.

NPDES-permitted stormwater discharges may occur within the bounds of sites that have been remediated or are undergoing remediation under CERCLA. Source sampling and sediment data from some NPDES discharge points have indicated exceedances of sediment cleanup goals established for CERCLA Sites. NPDES permits, particularly general permits, may not control discharges sufficiently to avoid sediment recontamination because effluent limits are written to protect the aquatic ecosystem rather than to prevent sediment impacts or contamination. As a result, after extensive and costly clean-up of federal CERCLA Sites, it is possible that these sites can be recontaminated by NPDES discharges, and cost recovery would not be available where the contamination comes from a federally-permitted release

Contaminated water and sediment can impair the designated uses of a waterbody, which are included in state/tribal water quality standards. Large quantities of soils and sediments can be "sinks" for contaminants because of their ability to pick up large amounts of a wide variety of contaminants (sorption). Sorption to soils and sediments may be the most influential factor on the transport and fate of organic contaminants in the environment (Chiou and Kile, 2000). Suspended sediment can be a major carrier of nutrients and metals (Schueler, 1997).

Aquatic organisms can be exposed to contaminants through their contact with both water and sediment, and also through ingestion of food, according to The Stormwater Effects Handbook (Burton and Pitt, 2002). Inorganic and organic chemicals can accumulate in organisms at chronic levels that cause toxicity or death. Sediment-associated contaminants are one of the most common sources of tissue contamination. Such contamination is linked to impacts to other biota higher in the food chain via the “food web transfer,” an effect especially quantifiable with mercury and some organochlorines such as PCBs and DDT. This occurs in both freshwater and marine systems and is not limited to the aquatic environment, as it has been observed in terrestrial species, especially birds (Burton and Pitt, 2002).

Non-benthic organisms can also ingest contaminated sediment directly when the sediment at rest at the bottom of a waterbody is mobilized. Superfund sites generally seek to reduce risk to humans and other aquatic and terrestrial receptors from eating the fish and other aquatic organisms contaminated by pollutants and/or being directly exposed to contaminated water and sediment, which could cause adverse effects to their health and mortality.

Given the above concerns and to avoid potential contamination/recontamination of the sites and potential subsequent exceedances of water quality standards, the 2021 MSGP describes the process that facilities discharging to a CERCLA Site in EPA Region 10 and identified in Appendix P are required to follow to obtain or maintain permit coverage. The process remains unchanged from the 2015 MSGP and provides an opportunity for the facility and/or EPA to identify or develop the control measures that prevent contamination/recontamination. Once these measures are in place, the facility should be able to obtain MSGP coverage (or, if coverage was obtained prior to the commencement of the CERCLA remediation or determination of an applicable discharge, to continue operating under the MGSP). Alternatively, the facility or EPA Region 10 may determine that coverage under the MSGP is not appropriate, and individual permit coverage may be sought or required per Part 1.3.8 of the permit. See 40 CFR 122.28(b)(3).

As noted above, this eligibility criterion is only applicable to MSGP facilities in EPA Region 10 states and Indian Country. EPA has extensive information that stormwater discharges are a source of CERCLA Site recontamination in Region 10. EPA Region 10 has seen both the actual recontamination of Superfund Sites from stormwater discharge points and the potential for recontamination from source control information gathered at Superfund Sites not yet cleaned up. Recontamination (exceedances of sediment cleanup standards) has occurred at the Thea Foss Waterway in Tacoma, Washington, which is within the Commencement Bay/Nearshore Tideflats Superfund Site and was cleaned up in 2006. It is known that the source of the recontamination is stormwater from two 96-inch municipal storm drains that drain approximately 5,000 acres of commercial/residential property, state highways, and city roads. Source control information gathered at the Lower Duwamish

Waterway Superfund Site and the Portland Harbor Superfund Site indicate there are facilities discharging stormwater containing suspended solids with PAHs, polychlorinated biphenyls (PCBs), and metals that exceed the preliminary remedial goals for sediment at those sites. Stormwater discharging from the municipal stormwater discharge points at the Thea Foss Waterway are covered by a Washington MS4 permit and have been since 1995. Many of the facilities discharging stormwater to the Lower Duwamish and Portland Harbor sites are covered by Washington and Oregon industrial stormwater general or MS4 permits. See EPA's 2015 MSGP docket for more information about CERCLA contamination/recontamination in Region 10 from permitted stormwater discharges (Docket ID: EPA-HQ-OW-2012-0803, https://www.regulations.gov/docket?D=EPA-HQ-OW-2012-0803). EPA's Region 10 Office also has expertise in determining site-specific measures that are necessary to ensure industrial stormwater discharges covered under the MSGP are not leading to recontamination of aquatic media at CERCLA Sites such that they meet all applicable water quality standard.

To identify which CERCLA Sites in EPA Region 10 this Part applies in the 2015 MSGP, EPA started with the Tier 1 and 2 sediment sites, then overlaid them with areas of federal CWA authority in Region 10. The sediment site tiering system is based on national EPA Office of Solid Waste and Emergency Response (OSWER) guidance on managing sediment cleanups, which establishes the tiering system for sediment sites that will have enhanced input and oversight by EPA. These sites contain a large amount of contaminated sediment, are expensive to remediate, and often impact significant numbers of humans and other ecological receptors. Tier 1 sediment sites are the largest contaminated sediment sites the CERCLA program is addressing. The Tier 2 sediment sites are in the evaluation process and are anticipated to meet the Tier 1 site criteria. The size of these sites makes it more likely that there will be multiple sources of contamination, including NPDES permitted discharge points. EPA Region 10 is actively engaged in the clean-up process at these sites and believes that when cleanup efforts are complete, these sites could have a higher probability of recontamination from NPDES permitted discharge points.

Part 1.2 Types of Discharges Authorized Under the MSGP

Part 1.2.1 Authorized Stormwater Discharges

This Part specifies which stormwater discharges are eligible for coverage under the permit. As described in Part 1.1.3 of this Fact Sheet, not all stormwater discharges associated with industrial activity are eligible for coverage under the 2021 MSGP (e.g., stormwater discharges regulated by certain national effluent limitations guidelines). Dischargers must refer to this Part of the permit to determine whether a particular stormwater discharge from their site can be covered under the MSGP. For example, Part 1.2.1.3 specifies that discharges that are not otherwise required to obtain NPDES permit authorization, but are mixed with discharges that are authorized under the 2021 MSGP, are eligible for coverage under the 2021 MSGP.

Part 1.2.1 used to be Part 1.1.2 in the 2015 MSGP. EPA moved this part out of the "eligibility conditions" section and created a new section in the permit specifically for types of discharges authorized (and not authorized) under the permit, still referenced in the eligibility conditions section. EPA hopes this will streamline the eligibility conditions section of the permit.

Part 1.2.2 Authorized Non-Stormwater Discharges

This Part lists the non-stormwater discharges authorized under the permit, specifically those non-stormwater discharges authorized for all sectors, for Sector A for spray water, and for

Sectors G, H, and J for earth-disturbing activities conducted prior to active mining activities. A change from the 2015 MSGP is a requirement that non-stormwater discharges from external building washdown/power wash water must be treated with appropriate control measures to minimize discharges of mobilized solids and other pollutants. This is similar to an existing requirement applicable to non-stormwater discharges of pavement wash waters. EPA encourages that other control measures be considered when doing such cleaning including using the least amount of water in pressure washing to reduce the quantity of discharge and running the wash water through a filter to remove pollutants prior to discharge. Other options are to direct the wash water flow through a green infrastructure feature(s) (or some similar treatment), or to capture and infiltrate the flow so there is no discharge. EPA reminds operators using green infrastructure features that proper operation and maintenance of the features is vital. In any case, if there are doubts regarding the presence of contaminants in the wash water, even after treatment, operators should not discharge it to be safe.

Previous MSGP versions authorized any pavement and building wash water to be discharged as long as there were no detergents or toxic/hazardous spill material present in the discharge. But cleaning agents other than detergents could also be utilized and could clearly have the potential to cause water quality issues if discharged. Therefore, in the 2021 MSGP EPA retains the 2015 MSGP provision that in addition to detergents, hazardous cleaning products are specifically prohibited from being discharged under the permit. EPA is also retaining the 2015 MSGP provision that prohibits the discharge of wash waters that have come into contact with oil and grease deposits, sources of pollutants associated with industrial activities, or any other toxic or hazardous materials, unless the residues have been cleaned up using dry clean-up methods. Additionally, because the act of washing (especially power washing) mobilizes particulates and other substances present on pavement, specific effluent limits have been newly included to ensure such mobilized particulates are controlled before they are discharged.

Part 1.3 Obtaining Authorization to Discharge

This Part specifies conditions that the operator must meet in order to obtain authorization under the 2021 MSGP.

Part 1.3.1 Prepare Your Stormwater Pollution Prevention Plan (SWPPP) Prior to Submitting Your Notice of Intent (NOI)

This Part requires that the operator develop or update the SWPPP prior to submitting the NOI for permit coverage. The operator must make the SWPPP publicly available by either attaching it to your NOI, including a URL in your NOI, or providing additional information from the SWPPP on the NOI, per Part 6.4.

Part 1.3.2 How to Submit Your NOI to Get Permit Coverage

This Part specifies that to be covered (i.e., authorized to discharge) under the 2021 MSGP, the operator must use NeT-MSGP to electronically prepare and submit to EPA a complete and accurate NOI by the deadlines listed in Table 1-2. Table 1-2 also provides the discharge authorization date for each category of facility.

Part 1.3.3 Deadlines for Submitting Your NOI and Your Official Date of Permit Coverage

This Part and Table 1-2 provide the deadlines for submitting NOIs for permit coverage and the minimum timeframes following NOI submission for discharge authorization for the different discharge categories. All NOI submittals are subject to a 30-day review period. EPA may use the waiting period to determine whether any additional measures are necessary to meet applicable water quality standards, to be consistent with an applicable WLA, or to comply with state or tribal antidegradation requirements. Additionally, during this waiting period, the Fish and Wildlife Service or the National Marine Fisheries Service, or the SHPO or THPO or other tribal representative, may request EPA place a hold on an NOI authorization based on concerns about listed species, critical habitat, and/or historic properties. Depending on the nature of the issue, EPA may require appropriate action either prior to or following discharge authorization. EPA may decide a delay in authorization is warranted, or that the discharge is not eligible for authorization under the 2021 MSGP, in which case an individual NPDES permit would be required.

Part 1.3.4 Modifying your NOI

This Part specifies that after submitting an NOI, if an operator needs to correct or update any fields, it may do so by submitting a "Change NOI" form using NeT-MSGP. Per Part 7.1, the operator must submit your Change NOI electronically via NeT-MSGP, unless the applicable EPA Regional Office grants a waiver from electronic reporting, in which case the operator may use the suggested format for the paper Change NOI form. When there is a change to the facility's operator, the new operator must submit a new NOI, and the previous operator must submit a Notice of Termination (NOT) form as specified in Part 1.4. In response to operator requests, EPA added a clarification of the timelines for updating the NOI when site conditions or operators change.

Part 1.3.5 Requirement to Post a Sign of your Permit Coverage

This Part requires operators to provide a sign or other notice of permit coverage at a safe, publicly accessible location in close proximity to the facility, as is required of other NPDES permittees, except in the instance where other laws or local ordinances prohibit such signage. If posting a sign is not allowed by the local jurisdiction or otherwise, the operator must document in the SWPPP a brief explanation for why it cannot post the sign and a reference to the law or ordinance. By providing notice of permit coverage and other information about the facility, interested parties are better informed and educated on how to obtain the SWPPP and how to contact the facility and EPA if stormwater pollution is observed in the discharge. Signage at facilities will increase public awareness of those facilities that have coverage under the 2021 MSGP.

Under the 2021 MSGP, EPA is requiring that the sign of permit coverage include a statement about how to obtain a copy of the SWPPP either from a URL or from the EPA Regional Office. This addition will help make the procedure for requesting a SWPPP easily understandable by the public. Part 5.4 in the 2015 MSGP required MSGP facilities to make their SWPPPs publicly available through a URL or by providing additional information in the NOI. Under this requirement, the sign must also include information on how to report a possible stormwater pollution problem to EPA.

Part 1.3.6 Your Official End Date of Permit Coverage

This Part describes how long permit coverage lasts. This part also covers the content described below under "Continuation of Coverage for Existing Operators After the Permit Expires." This clarification was previously stated in Part 1.2.2 of the 2015 MSGP and is now located in the fact sheet for the 2021 MSGP. The clarification describes for facilities the continuation of coverage for existing facilities if the permit expires. Where EPA fails to issue a final general permit prior to the expiration of a previous general permit, EPA has the authority to administratively extend the permit for operators authorized to discharge under the prior general permit. However, EPA does not have the authority to provide coverage to industrial facilities not already authorized to discharge under that prior general permit. If the five-year expiration date for this permit has passed and a new MSGP has not been reissued, any such projects would need to obtain coverage under an individual permit, or other general permit that is still in effect.

Part 1.3.7 Continuation of Coverage for Existing Operators After the Permit Expires

Note that if the 2021 MSGP is not reissued or replaced prior to the expiration date, it will be administratively continued in accordance with section 558(c) of the Administrative Procedure Act (see 40 CFR 122.6) and remain in force and effect for operators that were covered prior to its expiration. All operators authorized to discharge prior to the expiration date of the 2021 MSGP will automatically remain covered under the 2021 MSGP until the earliest of:

1. The date the operator is authorized for coverage under a new version of the MSGP following the timely submittal of a complete and accurate NOI. Note that if a timely NOI for coverage under the reissued or replacement permit is not submitted, coverage will terminate on the date that the NOI was due; or
2. The date of the submittal of a Notice of Termination; or
3. Issuance of an individual permit for the facility’s discharge(s); or
4. A final permit decision by EPA not to reissue the MSGP, at which time EPA will identify a reasonable time period for covered operators to seek coverage under an alternative general permit or an individual permit. Coverage under the 2021 MSGP will terminate at the end of this time period.

EPA reserves the right to modify or revoke and reissue the 2021 MSGP under 40 CFR 122.62 and 63, in which case operators will be notified of any relevant changes or procedures to which they may be subject. If EPA fails to issue another general permit prior to the expiration of a previous one, EPA does not have the authority to provide coverage to industrial operators not already covered under that prior general permit. If the five-year expiration date for the 2021 MSGP has passed and a new MSGP has not been reissued, new operators seeking discharge authorization should contact EPA regarding the options available, such as applying for individual permit coverage.

Part 1.3.8 Coverage Under Alternative Permits

This Part describes the procedures for obtaining an alternative permit. The following are scenarios in which an alternative permit may be required: 1) a new or previously permitted operator is denied coverage under the MSGP; 2) an existing operator covered under the 2021 MSGP loses their authorization under the MSGP; or 3) an operator requests to be covered under an alternative permit.

Following submittal of a complete and accurate NOI, EPA may notify an operator in writing that it is not covered under the 2021 MSGP, and that it must apply for and/or obtain coverage under either an individual NPDES permit or an alternate general NPDES permit. This notification will include a brief statement of the reasons for this decision and will provide application information or NOI requirements.

If an operator is currently covered under a previously issued MSGP or the 2021 MSGP, the notice will set a deadline to file the permit application or NOI for an individual permit or alternative general permit, and will include a statement that on the effective date of the individual NPDES permit or the date of coverage under an alternative general NPDES permit, coverage under this general permit will terminate. EPA will terminate your MSGP permit coverage in NeT-MSGP at that time. EPA may grant additional time to submit the application or NOI if the operator requests it. If an operator fails to submit an individual NPDES permit application or NOI as required by EPA, the applicability of the MSGP is terminated at the end of the day specified by EPA as the deadline for application or NOI submittal. EPA may take appropriate enforcement action for any unpermitted discharges. If the operator submits a timely permit application or NOI, coverage under the MSGP is terminated on the effective date of the coverage under the alternative permit.

After obtaining coverage under the MSGP, the operator may request to be excluded from such coverage by applying for an individual permit. In this case, the operator must submit an individual permit application per 40 CFR 122.28(b)(3)(iii), along with a statement of reasons supporting the request, to the applicable EPA Regional Office listed in Part 7.8. The request for an individual permit may be granted (or an alternative general permit may be proffered) if the reasons are adequate to support the request. When an individual permit is issued or coverage under an alternative general permit is granted, MSGP coverage is automatically terminated on the effective date of the alternative permit, per 40 CFR 122.28(b)(3)(iv).

Part 1.4 Terminating Coverage

Part 1.4.1 How to Submit your Notice of Termination (NOT) to Terminate Permit Coverage

This Part describes how to submit a Notice of Termination (NOT) to terminate permit coverage. Termination of MSGP coverage indicates that the operator no longer has an obligation to manage industrial stormwater per the MSGP’s provisions, based on at least one of the reasons described in Part 1.3.1. To terminate MSGP coverage, the operator must use NeT-MSGP to electronically prepare and submit a complete and accurate NOT, unless the applicable EPA Regional Office grants the operator a waiver from electronic reporting, in which case it may use the paper NOT form in Appendix H; the operator’s authorization to discharge terminates at midnight of the day that the complete NOT is processed. If EPA determines that the NOT is incomplete or that the operator has not satisfied one of the termination conditions in Part 1.3.2, then the notice is not valid and the operator must continue to comply with the conditions of the permit.

Part 1.4.2 When to Submit Your Notice of Termination

If an operator desires to terminate MSGP coverage, it must submit a NOT, as described in Part 1.4.2, within 30 days after one or more of the following conditions have been met: (1) a new owner or operator has received authorization to discharge under this permit; (2) operations have ceased at the facility (including facility closure) and there no longer are discharges of stormwater associated with industrial activity and necessary sediment and erosion controls have already been implemented at the facility as required by Part 2.1.2.5; (3) operators are covered under one of the three mining-related sectors in the permit (i.e., Sectors G, H, and J) and they have met the specific termination requirements described in the specific sector under which they are covered; or (4) permit coverage has been obtained under an individual permit or alternative general permit for all discharges requiring NPDES permit coverage.

Part 1.5 Conditional Exclusion for No Exposure

This Part states that by submitting a No Exposure Certification (NEC), an operator is no longer required to comply with the MSGP (including the NOT requirements), providing the operator maintains a condition of "no exposure" (i.e., all industrial materials and operations are not exposed to stormwater). An operator must use NeT-MSGP to electronically prepare and submit to EPA a complete and accurate NEC once every five years per Part 7.2, unless the applicable EPA Regional Office grants you a waiver from electronic reporting, in which case you may use the paper NEC form in Appendix K.

Part 1.6 Permit Compliance

This Part explains that any failure to comply with the conditions of the 2021 MSGP constitutes a violation of the CWA (further discussed in Appendix B). Where requirements and schedules for taking corrective actions are specified, the time intervals are not grace periods, but are schedules considered reasonable for making repairs and improvements. For provisions specifying a time period to remedy noncompliance, the initial failure, such as a violation of a numeric or non-numeric effluent limit, constitutes a violation of the MSGP and the CWA, and subsequent failure to remedy such deficiencies within the specified time periods constitutes an independent, additional violation of the 2021 MSGP and CWA. However, where an event occurs which does not itself constitute permit noncompliance, such as an exceedance of an applicable benchmark, there is no permit violation provided the operator takes the required responses within the deadlines in Part 5. Also applicable to all operators is the “duty to comply,” a standard NPDES permit condition listed in Appendix B.

Part 1.7 Severability

Severability is a standard permit condition applicable to every NPDES permit. The term means that if any portion of the 2021 MSGP is deemed to be invalid, it does not necessarily render the whole permit invalid and it is EPA’s intent for the MSGP to remain in effect to the extent possible, pursuant to 40 CFR 124.16(a)(2) and 124.60. In the event that any part of the 2021 MSGP is invalidated, EPA will advise the regulated community as to the effect of such invalidation. EPA typically puts all standard permit conditions in an Appendix (Appendix B in 2021 MSGP), but the Agency put the severability requirement in Part 1 to make sure operators do not overlook this provision.

Part 2 Control Measures and Effluent Limits

The 2021 MSGP contains effluent limits that correspond to required levels of technology-based control for various discharges under the CWA (Best Practicable Control Technology Currently Available (BPT) as set forth in CWA section 304(b)(1) and Appendix A; Best Available Technology Economically Achievable (BAT), as set forth in CWA section 304(b)(2) and Appendix A; and Best Conventional Pollutant Control Technology (BCT), as set forth in CWA section 304(b)(4) and Appendix A). Where an ELG or NSPS applies to discharges authorized by this permit, the requirement must be incorporated into the permit as an effluent limitation. These limits are included, as applicable, in the sector-specific requirements of Part 8. Where EPA has not yet issued an effluent limitation guideline, EPA determines the appropriate technology-based level of control based on best professional judgment (BPJ, sometimes also referred to as "best engineering judgment") of the permit writer. CWA section 402(a)(1); 40 CFR 125.3. For the 2021 MSGP, most of the technology-based limits are based on BPJ decision-making because no ELG applies.

Stormwater discharges can be highly intermittent, are usually characterized by high flows occurring over relatively short time intervals, and can carry a variety of pollutants whose source, nature and extent varies. This is in contrast to process wastewater discharges from a particular industrial or commercial facility where the effluent is generally more predictable and can be more effectively analyzed to develop numeric effluent limitations. EPA includes non-numeric effluent limits in NPDES permits,[3] such as the MSGP, such as requirements mandating facilities to "minimize" various types of pollutant discharges, or to implement control measures unless "infeasible." Consistent with the control level requirements of the CWA, since 2008 for purposes of the MSGP EPA has defined the term "minimize" as "for the purposes of this permit minimize means to reduce and/or eliminate to the extent achievable using control measures that are technologically available and economically practicable and achievable in light of best industry practices." Similarly, "feasible" means "technologically possible and economically practicable and achievable in light of best industry practices. EPA notes that it does not intend for any permit requirement to conflict with state water rights law." EPA has determined that the technology-based numeric and non-numeric effluent limits in the 2021 MSGP, taken as a whole, constitute BPT for all pollutants, BCT for conventional pollutants, and BAT for toxic and nonconventional pollutants that may be discharged via industrial stormwater.

The BAT/BPT/BCT effluent limits in the 2021 MSGP are expressed as specific pollution prevention requirements for minimizing the pollutant levels in the discharge. Some effluent limits have greater specificity because in past MSGPs they were written in general terms, leaving operators wide latitude in interpreting what constituted compliance, which led to widely varying levels of stormwater program effectiveness. EPA continues to assert that the combination of pollution prevention and structural management practices required by these limits are the best technologically available and economically practicable and achievable controls, as well as the most environmentally sound way to control the discharge of pollutants in stormwater discharges from industrial facilities. This approach is supported by the results of a comprehensive technical survey EPA completed in 1979. Pollution prevention continues to be the cornerstone of the NPDES stormwater program.

Requirements are technologically available

EPA asserts that the requirements of the 2021 MSGP represent BPT, BCT and BAT. Most of the effluent limits in the 2021 MSGP have been permit requirements since EPA first issued the MSGP in 1995 (with minor modifications). Additionally, because most facilities covered under the permit are existing dischargers, these facilities are already implementing control measures to meet the effluent limits in the permit.

Requirements meet the BPT and BAT economic requirements set forth in the CWA

There are different economic considerations under BPT, BCT, and BAT. EPA finds that the limits in the 2021 MSGP meet the BPT and BAT economic requirements. Essentially, the same types of controls are employed to minimize toxic, nonconventional and conventional pollutants. As a result, EPA is evaluating effluent limits using only the BPT and BAT standards. Since conventional pollutants will also be adequately controlled by these same effluent limits for which EPA applied the BPT and BAT tests, EPA has determined that it is not necessary to conduct separate BCT economic tests.

---

[3] *Natural Res. Def. Council, Inc. v. EPA*, 673 F.2d 400, 403 (D.C. Cir. 1982) (noting that "[CWA] section 502(11) defines 'effluent limitation' as ' any restriction' on the amounts of pollutants discharged, not just a numerical restriction'"; holding that section of CWA authorizing courts of appeals to review promulgation of "any effluent limitation or other limitation" did not confine the court's review to the EPA's establishment of numerical limitations on pollutant discharges, but instead authorized review of other limitations under the definition) . In *Natural Res. Def. Council, Inc. v. Costle*, 568 F.2d 1369 (D.C. Cir. 1977), the D.C. Circuit stressed that when numerical effluent limitations are infeasible, EPA may issue permits with conditions designed to reduce the level of effluent discharges to acceptable levels.

Under BPT, EPA determined that the requirements of the 2021 MSGP are economically practicable. EPA considered the reasonableness of the relationship between the costs of application of technology in relation to the effluent reduction benefit derived. CWA section 304(b)(1)(B); 40 CFR 125.3(d)(1). EPA estimates the total universe of dischargers that the 2021 MSGP will affect includes approximately 2,270 existing dischargers. Based on estimates provided in prior permits, updated to reflect changes to the permit and current dollars, EPA estimates the approximate incremental cost of complying with the 2021 MSGP is around $3.85 to $7.17 million for 2,270 facilities over the 5-year permit term or $1,690 to $3,157 per facility over the 5-year permit term. It is well documented that stormwater control measures (SCMs), like the ones required to comply with the 2021 MSGP, are effective at controlling pollutants in stormwater discharges. For example, the 2009 National Academies of Sciences' report, Urban Stormwater Management in the United States, noted that "SCMs, when designed, constructed, and maintained correctly, have demonstrated the ability to reduce discharge volume and peak flows and to remove pollutants. A multitude of case studies illustrates the use of SCMs in specific settings and demonstrates that a particular SCM can have a measurable positive effect on water quality or a biological metric" (9).

The $3.85 to $7.17 million total incremental cost accounts for the cost of some requirements that do not apply to all facilities; different facilities will have different compliance costs therefore an average cost per facility is not necessarily reflective of total cost. The total incremental cost was averaged over 2,270 facilities to obtain a per facility cost of $1,690 to $3,1572 over the five-year permit term. This cost is comparable to the previous 2015 MSGP estimate of $2,750 per facility. Although $3.85 to $7.17 million total incremental cost does not account for some requirements that require site-specific controls and can only be calculated per unit cost, EPA expects many facilities will have already implemented controls under the previous permit to comply with some new requirements and that some controls can satisfy multiple requirements. Therefore, it is possible total costs may be lower, depending on which controls the operator has at their facility.

Based on the cost analysis, EPA determined that the requirements of the 2021 MSGP are economically achievable. In determining "economic achievability" under BAT, EPA considered whether the costs of the controls can reasonably be borne by the industry. Because most facilities covered under the permit are existing dischargers and those facilities are already implementing control measures to meet the effluent limits in the permit, and considering the relatively modest incremental (over the 2015 permit) cost of compliance with the 2021 MSGP (around $338 to $632 per year per facility), EPA concludes that the technology-based effluent limitations in the MSGP are unlikely to result in a substantial economic impact to the permitted universe, including small businesses. Hence, EPA interprets this analysis to indicate that BAT limits are economically achievable. The cost analysis for the 2021 MSGP is available on the docket for the 2021 MSGP (EPA-HQ-OW-2019-0372).

Stormwater Control Measures Used to Meet the Technology-Based Effluent Limits

Stormwater control measures (SCMs) can be actions (including processes, procedures, schedules of activities, prohibitions on practices and other best management practices), or structural or installed devices to minimize or prevent water pollution. There are many options that help prevent pollutants from entering waters of the United States, and of meeting applicable effluent limits, water quality standards, or WLAs. Industrial facility operators are required to select, design, install and implement site-specific control measures to meet these limits.

EPA generally does not mandate the specific SCMs that operators must select, design, install and implement to meet the technology-based effluent limits in the permit. The permit provides operators the flexibility to determine their site-specific controls, taking into consideration what controls are most suited for their industry in terms of economic practicability and technology availability, and in some cases, considerations such as available space and safety. For example, Part 2.1.2.1 requires operators to minimize the exposure of raw, final and waste materials to stormwater. For some facilities, some or all activities and material storage may be moved indoors, while for others this will not be feasible. However, even when moving all activities/materials indoors is infeasible, some of them could be shielded by roofing or tarps, while still other activities may be limited to times when exposure to precipitation is not likely. Each of these SCMs is acceptable and appropriate depending on the circumstances. In this respect the non-numeric effluent limits in the 2021 MSGP are analogous to more traditional numeric effluent limits, which also do not require specific control technologies to meet the limits.

For many facilities, controls already in place for product loss prevention, accident and fire prevention, worker health and safety or to comply with other environmental regulations may be sufficient to meet the stormwater effluent limits in the MSGP. For many facilities, the effluent limits can be achieved without using highly engineered or complex treatment systems. The specific limits in Part 2.1 of the MSGP emphasize “low-tech” controls, such as minimizing exposure to stormwater, regular cleaning of outdoor areas where industrial activities may take place, proper maintenance, etc. However, sometimes treatment devices or constructed/installed controls may be necessary, particularly where a facility’s discharge might cause a violation of water quality standards in receiving waters.

The permit and Fact Sheet provide examples of stormwater control measures, but operators are expected to tailor these to their facilities as well as improve upon them as necessary to meet permit limits.

Part 2.1 Stormwater Control Measures (SCMs)

Part 2.1 requires operators to select, design, install, and implement SCMs, in accordance with good engineering practices and manufacturer’s specifications, to meet the technology-based effluent limits listed in Parts 2.1.2 and 2.1.3 and the water quality-based effluent limitations in Part 2.2. Note that compliance with the Part 2 effluent limits involving SCMs does not compel operators to undertake any activities that are considered unsafe. Operators must be aware that regulated stormwater discharges include stormwater run-on from outside sources that commingles with their own stormwater discharges associated with industrial activity, and they must account for the commingled discharges accordingly when selecting SCMs. If operators find their SCMs are not reducing pollutant discharges adequately, the control measures must be modified in accordance with the Part 5.1 corrective action requirements.

Some of the SCMs required in this Part are straightforward and as a result, the associated Part 6 SWPPP documentation requirements may be minimal. This means that it is acceptable to copy and paste the language of the effluent limit from the permit in the SWPPP without any additional detail or selection of a control measure. EPA maintains in the 2021 MSGP the following documentation provision that was included in the 2015 MSGP to provide for such convenience and burden reduction for operators: “Effluent limit requirements in Part 2.1.2 that do not involve the site-specific selection of a control measure or are specific activity requirements (e.g., ‘Cleaning catch basins when the depth of debris reaches two-thirds (2/3) of the sump depth, in line with manufacturer specifications, whichever is lower, and keeping the debris surface at least six inches below the outlet pipe') are marked with an asterisk (*). When documenting in your SWPPP, per Part 6, how you will comply with the requirements marked with an asterisk, you have the option of including additional information or you may just 'copy-and-paste' those effluent limits word-for-word from the permit into your SWPPP without providing additional documentation (see Part 6.2.4)." The relative lack of leeway or choices that operators have for compliance justifies the option of allowing operators to reproduce verbatim the requirement as written in the MSGP into their SWPPPs. While minimal documentation may be sufficient and reduces some burden, operators may wish to add more information about where, when, and to which activities at the site the effluent limit/control measure will be applied, if they deem this information useful.

The permit's approach to SCMs is consistent with the CWA and its implementing regulations at 40 CFR 122.44(k)(4). Section 402(a)(2) of the CWA states: "The administrator shall prescribe conditions for such permits to assure compliance with the requirements in paragraph (1) . . .including conditions on data and information collection, reporting and such other requirements as he deems appropriate." (Section 402(a)(1) includes effluent limitation requirements.) This statutory provision is reflected in the CWA implementing regulations, which state that BMPs, i.e., control measures, can be included in permits when "[t]he practices are reasonably necessary to achieve effluent limitations and standards or to carry out the purposes and intent of the CWA." 40 CFR 122.44(k)(4).

Part 2.1.1 SCM Selection and Design Considerations

In Part 2.1.1 operators are required to consider certain factors when selecting and designing control measures. EPA recognizes that not all of these considerations will be applicable to every facility nor will they always affect the choice of control measures. However, operators should still document that these factors were considered when selecting and designing their control measures per Part 6.2.4. The selection and design considerations include:

- Preventing stormwater from coming into contact with polluting materials is generally more effective and less costly than trying to remove pollutants from stormwater;
- Using combinations of control measures is more effective than using control measures in isolation for minimizing pollutants;
- Assessing the type and quantity of pollutants, including their potential to impact receiving water quality, is critical to determining which control measures will achieve the limits in the permit;
- Minimizing impervious areas at the facility and infiltrating stormwater on site (via bioretention cells, green roofs, pervious pavement, etc.) can reduce the frequency and volume of discharges, and improve ground water recharge and stream base flows in local streams (although care must be taken to avoid ground water contamination);
- Attenuating flow using open vegetated swales and natural depressions can reduce in-stream impacts of erosive flows;
- Conserving and/or restoring riparian buffers can help protect streams from stormwater discharges and improve water quality;
- Using treatment interceptors (e.g., swirl separators, oil-water separators, sand filters) may be appropriate in some instances to minimize the discharge of pollutants; and
- Implementing structural improvements, enhanced/resilient pollution prevention measures, and other mitigation measures will help to minimize impacts from stormwater

discharges from major storm events, such as hurricanes, storm surge, extreme/heavy precipitation, and flooding. If such controls or measures are already in place due to existing requirements mandated by other state, local or federal agencies, you should document in your SWPPP a brief description of the controls and a reference to the existing requirement(s). If your facility may be exposed to or has previously experienced such major storm events,[4] additional measures to consider include, but are not limited to:

- Reinforce materials storage structures to withstand flooding and additional exertion of force;
- Prevent floating of semi-stationary structures by elevating to the Base Flood Elevation (BFE)[5] level or securing with non-corrosive device;
- When a delivery of exposed materials is expected, and a storm is anticipated within 48 hours, delay delivery until after the storm or store materials as appropriate (refer to emergency procedures);
- Temporarily store materials and waste above the BFE level;
- Temporarily reduce or eliminate outdoor storage;
- Temporarily relocate any mobile vehicles and equipment to higher ground;
- Develop scenario-based emergency procedures for major storms that are complementary to regular stormwater pollution prevention planning and identify emergency contacts for staff and contractors; and
- Conduct staff training for implementing your emergency procedures at regular intervals.

The 2021 MSGP requires operators that may be located in areas susceptible to or have experienced major storm events to consider implementing enhanced measures, such as structural improvements, additional pollution prevention measures, and other mitigation measures that are complementary to regular stormwater pollution prevention planning. Part 2.1.1 requires that operators must consider Parts 2.1.1.1 through 2.1.1.8 when selecting and designing control measures to minimize pollutant discharges via stormwater. Part 2.1.1 does not require nor prescribe specific control measure to be implemented; however, operators must document in their SWPPPs per Part 6.2.4 the considerations made to select and design control measures at the facility to minimize pollutants discharged via stormwater. Examples of major storm events are hurricanes, storm surge, extreme/heavy precipitation, and flooding. EPA is not requiring operators to implement the controls given as examples in the permit but is requiring operators to consider the benefit of selecting and designing control measures that reduce risks to their industrial facility and the potential impact of pollutants in stormwater discharges caused by major storm events. Heavy precipitation refers to instances during which the amount of rain or snow experienced in a location substantially exceeds what is normal. What constitutes a period of heavy precipitation varies according to location and season. Heavy precipitation does not

---

[4] To determine if your facility is susceptible to an increased frequency of major storm events that could impact the discharge of pollutants in stormwater, you may reference FEMA, NOAA, or USGS flood map products at https://www.usgs.gov/faqs/where-can-i-find-flood-maps?qt-news_science_products=0#qt-news_science_products.

[5] Base Flood Elevation (BFE) is the elevation of surface water resulting from a flood that has a 1% chance of equaling or exceeding that level in any given year. The BFE is shown on the Flood Insurance Rate Map (FIRM) for zones AE, AH, A1–A30, AR, AR/A, AR/AE, AR/A1– A30, AR/AH, AR/AO, V1–V30 and VE. (Source: https://www.fema.gov/node/404233). The FEMA Flood Map Service Center can be accessed through https://msc.fema.gov/portal/search.

necessarily mean the total amount of precipitation at a location has increased—just that precipitation is occurring in more intense or more frequent events.

Where facilities already have emergency and risk management plans or have already implemented such controls due to existing requirements mandated by other state, local or federal agencies, operators should include in their SWPPP a description of measures in place for such events and a reference to the existing requirement(s). Operators should also consider how they might bolster existing procedures to account for the impacts on their SCMs (for instance, controls being filled with sediment or clogged by debris) and potential pollutant discharges during major storm events. Operators are encouraged to consider all reasonably available data and utilize various reference maps, including those published by FEMA, NOAA, and USGS, to help determine if their facility may experience an increased frequency of major storm events that could impact the discharge of pollutants in stormwater.

Part 2.1.2 Non-Numeric Technology-Based Effluent Limits (BPT/BAT/BCT)

The 2021 MSGP requires operators to implement stormwater control measures (SCMs) to comply with non-numeric technology-based effluent limits, expressed narratively pursuant to 40 CFR 122.44(k). The achievement of these non-numeric limits will result in the reduction or elimination of pollutants from stormwater discharges. Such limits were developed using EPA’s best professional judgment (BPJ). The requirements in Part 2 are the effluent limits applicable to all discharges associated with industrial activity for all sectors, while additional sector-specific effluent limits are found in Part 8.

Throughout Part 2.1 (and Part 8), the term “minimize” means to “reduce and/or eliminate to the extent achievable using control measures (including best management practices) that are technologically available and economically practicable and achievable in light of best industry practice.” The term “infeasible” means not technologically available or not economically practicable and achievable in light of best industry practices. EPA notes that it does not intend for any permit requirement to conflict with state water rights law. The following is a summary of the permit’s non-numeric technology-based effluent limits:

Part 2.1.2.1 Minimize Exposure

This Part requires operators to limit the exposure of manufacturing, processing, and material storage areas to stormwater in order to minimize (per the definition of “minimize” in Appendix A) pollutant discharges by either locating industrial materials and activities inside or protecting them with storm-resistant coverings. Limiting contact with precipitation can reduce the need for control measures to treat or otherwise reduce pollutants in stormwater discharges. Examples include covering materials or activities with temporary structures (e.g., tarps) when wet weather is expected or moving materials or activities to existing or new permanent structures (e.g., buildings, silos, sheds). Even a simple practice such as keeping a dumpster lid closed can be very effective. Effluent limit requirements that do not involve the site-specific selection of a control measure or are specific activity requirements are marked with an asterisk (*). When documenting in your SWPPP, per Part 6, how the operator will comply with the requirements marked with an asterisk, the operator has the option of including additional information or it may just ‘copy-and-paste’ those effluent limits word-for-word from the permit into the SWPPP without providing additional documentation (see Part 6.2.4). In minimizing exposure, operators must also:

- Use grading, berming, or curbing to prevent discharges of contaminated flows and divert run-on away from these areas;

- Locate materials, equipment, and activities so that potential leaks and spills are contained or able to be contained or diverted before discharging;
- Store leaky vehicles and equipment indoors;
- Perform all vehicle and/or equipment cleaning operations indoors, under cover, or in bermed areas that prevent discharges and run-on and also that capture any overspray; and
- Drain fluids from equipment and vehicles that will be decommissioned, and, for any equipment and vehicles that will remain unused for extended periods of time, inspect at least monthly for leaks.*

EPA moved several requirements that were under Part 2.1.2.1 in the 2015 MSGP to Part 2.1.2.4 in the 2021 MSGP due to public comments that those requirements more appropriately belonged in the section of the permit that outlined requirements for spill prevention and response.

<u>Part 2.1.2.2 Good Housekeeping</u>

This Part requires that the operator keep all exposed areas that are potential pollutant sources clean to help receiving waters meet water quality standards. Good housekeeping is an inexpensive way to maintain a clean and orderly facility and keep contaminants out of stormwater discharges. Often the most effective first step towards minimizing pollution in stormwater from industrial sites simply involves commonsense improvements to a facility's basic housekeeping methods. A clean and orderly work area can reduce the possibility of accidental spills caused by mishandling of chemicals and equipment and well-maintained material and chemical storage areas can reduce the possibility of stormwater mixing with pollutants.

There are some simple procedures operators can implement to meet the good housekeeping effluent limit, including improved operation and maintenance of industrial machinery and processes, improved materials storage practices, better materials inventory controls, more frequent and regular clean-up schedules, maintaining well organized work areas, and education programs for employees about these practices. Effluent limit requirements that do not involve the site-specific selection of a control measure or are specific activity requirements are marked with an asterisk (*). When documenting in your SWPPP, per Part 6, how the operator will comply with the requirements marked with an asterisk, the operator has the option of including additional information or it may just 'copy-and-paste' those effluent limits word-for-word from the permit into the SWPPP without providing additional documentation (see Part 6.2.4). At a minimum, to comply with this effluent limit operators must:

- Sweep or vacuum at regular intervals, or alternatively, wash down the area and collect and/or treat, and properly dispose of the wash down water;
- Store materials in appropriate containers;
- Keep all dumpsters with a lid closed when not in use. For dumpsters and roll off boxes that do not have lids and could leak, ensure that discharges have a control (e.g., secondary containment, treatment). In no cases can there be dry weather discharges from dumpsters or roll off boxes;*
- Minimize the potential for waste, garbage, and floatable debris to be discharged by keeping exposed areas free of such materials or by intercepting them before they are discharged.

- This part also includes a plastic materials requirement for facilities that handle pre-production plastic (“nurdles”) to implement SCMs to eliminate such plastic discharges in stormwater. EPA includes this language to identify and increase awareness of the potential for this type of pollution to occur. Examples of plastic material required to be addressed as stormwater pollutants include plastic resin pellets, powders, flakes, additives, regrind, scrap, waste and recycling. EPA added examples in a footnote of the permit of appropriate control measures, which include but are not limited to: installing a containment system, or other control, at each on-site storm drain discharge point down gradient of areas containing plastic material, designed to trap all particles retained by a 1mm mesh screen; using a durable sealed container designed not to rupture under typical loading and unloading activities at all points of plastic transfer and storage; using capture devices as a form of secondary containment during transfers, loading, or unloading plastic materials, such as catch pans, tarps, berms or any other device that collects errant material; having a vacuum or vacuum-type system for quick cleanup of fugitive plastic material available for employees; for facilities that maintain outdoor storage of plastic materials, do so in a durable, permanent structure that prevents exposure to precipitation that could cause the material to be discharged via stormwater.

EPA also recommends that operators store containers that are potential sources of stormwater pollution away from direct traffic routes, stack them according to manufacturer’s specifications, and store them on pallets or other similar devices to prevent corrosion.

Part 2.1.2.3 Maintenance

This Part describes how operators must maintain all SCMs so they remain effective. Effluent limit requirements that do not involve the site-specific selection of a control measure or are specific activity are marked with an asterisk (*). When documenting in your SWPPP, per Part 6, how the operator will comply with the requirements marked with an asterisk, the operator has the option of including additional information or it may just ‘copy-and-paste’ those effluent limits word-for-word from the permit into the SWPPP without providing additional documentation (see Part 6.2.4). Operators must comply with the following maintenance activity requirements:

- Performing inspections and preventive maintenance of stormwater drainage, source controls, treatment systems, and plant equipment and systems that could fail and result in discharge of pollutants via stormwater;
- Diligently maintaining nonstructural control measures (e.g., keep spill response supplies available, personnel appropriately trained);
- Inspecting and maintaining baghouses at least quarterly to prevent the escape of dust from the system and immediately removing accumulated dust at the base of the exterior baghouse;*
- Cleaning catch basins when the depth of debris reaches two-thirds (2/3) of the sump depth, or in line with manufacturer specifications, whichever is lower, and keeping the debris surface at least 6 inches below the outlet pipe.*

If the operator finds that its control measures need maintenance, it must conduct necessary maintenance immediately. If control measures need to be repaired or replaced, the operator must immediately take all reasonable steps to minimize or prevent the discharge of pollutants until it can implement the final repair or replacement, including cleaning up any contaminated surfaces so that the material will not be discharged during subsequent storm events. Final repairs/replacement of stormwater controls should be completed as soon as feasible but must be no later than the timeframe established in Part 5.1.3 for corrective actions, i.e., within 14 days or, if that is infeasible, no longer than 45 days (or longer per notification of the Region). If a control measure was never installed, was installed incorrectly, or not in accordance with Parts 2 and/or 8, or is not being properly operated or maintained, the operator must conduct corrective action as specified in Part 5.1.

The 2021 MSGP now specifies that "immediately" means that the day the operator finds a condition requiring corrective action, you must take all reasonable steps to minimize or prevent the discharge of pollutants until you can implement a permanent solution. However, if the operator identifies a problem too late in the work-day to initiate corrective action, the operator must perform the corrective action the following work-day morning. "All reasonable steps" means that the operator responds to the conditions triggering the corrective action, such as cleaning up any exposed materials that may be discharged via stormwater (e.g., through sweeping, vacuuming) or making arrangements (i.e., scheduling) for a new SCM to be installed. "All reasonable steps" does not mean taking action when it is unsafe to do so (e.g., due to inclement weather).

This Part includes language on baghouses to highlight the need for their inspection and maintenance, because baghouses can be significant sources of pollutants. EPA encourages operators to inspect and maintain baghouses more frequently than quarterly and encourages the use of baghouse leak detectors so that problems are detected as soon as possible. This Part also includes industry-standard catch basin cleaning requirements to prevent this maintenance action from being overlooked. Where possible, EPA encourages operators to clean catch basins prior to the debris depth reaching 2/3 in order to avoid a SCM failure. EPA added a part to this requirement regarding cleaning catch basins based on manufacturer specifications if those specifications were lower than 2/3 debris depth.

Part 2.1.2.4 Spill Prevention and Response Procedures

This Part requires that operators minimize the potential for stormwater exposure from leaks, spills and other releases, which can be significant sources of stormwater pollution. As a reminder, the term "minimize" is defined, for the purposes of this permit, as "to reduce and/or eliminate to the extent achievable using control measures that are technologically available and economically practicable and achievable in light of best industry practices." In addition to preventing spills and leaks, this effluent limit has requirements after a spill/release occurs, to limit environmental damage. EPA encourages operators to identify potential spill areas and keep an inventory of materials handled, used, and disposed. This information would be valuable for complying with the requirement to specify the material handling procedures, storage requirements, containment or diversion equipment, and spill cleanup procedures that will minimize the potential for spills/releases and, in the event of a spill/release, ensure a proper and timely response. Effluent limit requirements that do not involve the site-specific selection of a control measure or are specific activity are marked with an asterisk (*). When documenting in your SWPPP, per Part 6, how the operator will comply with the requirements marked with an asterisk, the operator has the option of including additional information or it may just 'copy-and-paste' those effluent limits word-for-word from the permit into the SWPPP without providing additional documentation (see Part 6.2.4). To comply with this effluent limit, operators must:

- Clean up spills and leaks promptly using dry methods (e.g., absorbents) to prevent the discharge of pollutants;

- Use drip pans and absorbents if leaky vehicles and/or equipment are stored outdoors;
- Use spill/overflow protection equipment;
- Plainly label containers (e.g., "Used Oil," "Spent Solvents," "Fertilizers and Pesticides") that could be susceptible to spillage or leakage to encourage proper handling and facilitate rapid response if spills or leaks occur;*
- Implement procedures for material storage and handling, including the use of secondary containment and barriers between material storage and traffic areas, or a similarly effective means designed to prevent the discharge of pollutants from these areas (e.g., curbing, spill diversion pond, double-walled tank, drip pan);
- Develop training on the procedures for expeditiously stopping, containing, and cleaning up leaks, spills, and other releases. When needed, execute such procedures as soon as possible;
- Keep spill kits on-site, located near areas where spills may occur or where a rapid response can be made; and
- Notify appropriate facility personnel when a leak, spill, or other release occurs.

Part 2.1.2.4 also specifies that when a leak, spill or other release containing a hazardous substance or oil in an amount equal to or in excess of a reportable quantity established under either 40 CFR 110, 40 CFR 117, or 40 CFR 302, occurs during a 24-hour period, the operator must notify the National Response Center (NRC) at (800) 424-8802 or, in the Washington, DC, metropolitan area, call (202) 267-2675 as soon as there is knowledge of the discharge. State or local requirements may necessitate reporting spills or discharges to local emergency response, public health, or drinking water supply agencies. Contact information must be in locations that are readily accessible and available.

In addition to implementing spill prevention and response measures to minimize stormwater contamination, EPA encourages operators to implement controls that will minimize the potential for leaked or spilled material from storage tanks to be discharged into receiving waterbodies. Such discharges can and have caused water quality impairments and serious drinking water problems downstream from the tank release. To prevent spills and leaks, EPA encourages MSGP facilities with material storage tanks, especially those with chemical storage tanks, to implement controls such as the following to both minimize the potential for stormwater contamination and to minimize the potential for direct discharges from storage tank spills or leaks:

- *Secondary containment*: For all chemical liquids and petroleum products that are held in a storage area, tank or other container, store the fluids within an impermeable secondary containment area with a retention capacity of at least 110% of the volume of the largest tank or container, or 10% of the total volume of all tanks and containers in the area, whichever is larger. There should be no overflow from the secondary containment area, which should be designed, constructed, operated and maintained so that the materials can be recovered and so that polluting materials cannot escape directly or indirectly to any public sewer system or to surface waters or ground water. Records should be maintained that document all such tanks and stored materials and their associated secondary containment area.
- *Secondary containment valves*: Secondary containment area valves that could provide stormwater and retained fluids access to a stormwater conveyance system should be controlled by manually activated valves or other similar devices (these should be secured and remain closed with a locking mechanism). Stormwater that

accumulates in the containment area should be visually inspected to ensure no leaks or spills have occurred before release of the accumulated stormwater. Records should be maintained that document the individual making the observation, the description of the accumulated stormwater, and the date and time of the release.

This effluent limit also requires that operators keep all industrial equipment and systems in effective operating condition in order to minimize pollutant discharges. Therefore, the operator must conduct regular maintenance and self-inspections (per Part 3) for all storage tanks and secondary containment areas. Operators must look for leaks/spills, cracks, corrosion, etc., to identify deficiencies and/or problem components such as fittings, pipe connections and valves. For any deficiencies identified, operators must conduct the necessary maintenance, or if applicable, take corrective action in accordance with Part 5.1.

Part 2.1.2.5 Erosion and Sediment Controls

This Part requires operators to minimize pollutant discharges from erosion by stabilizing exposed soils at the facility in order to minimize pollutant discharges and placing flow velocity dissipation devices at discharge locations. Velocity dissipation should control channel and streambank erosion and scour in the immediate vicinity of discharge points. Part 2.1.2.5 also requires the use of structural and non-structural controls to minimize the discharge of sediment. EPA requires that whenever polymers and/or other chemical treatment will be used for erosion control, the polymers and/or chemicals and their purpose must be identified in the SWPPP.

The purpose of this requirement is to prevent discharges of sediment from exposed areas of industrial sites that, due to construction activities, steep slopes, sandy soils or other causes, are prone to soil erosion. Construction and other earth-disturbing activities often result in the exposure of underlying soil to wind and precipitation, while steep slopes or sandy soils may not be able to hold plant life so that soils are exposed, leading to erosion and the need for erosion controls.

The types of erosion controls for exposed areas that operators should consider first include seeding, mulching, and sodding to prevent soil from becoming dislodged. Sediment control practices such as silt fences, sediment ponds, and stabilized entrances trap sediment after it has eroded. Sediment control practices, such as flow velocity dissipaters and sediment catchers, must be used to back up erosion control practices. There are many resources available to help operators select appropriate control measures for erosion and sediment, including EPA's Stormwater Discharges from Construction Activities website at: https://www.epa.gov/npdes/stormwater-discharges-construction-activities.

EPA acknowledges that portions of some industrial facilities are intended to be left unvegetated or unstabilized. For example, sizable unpaved earthen areas are common at large steel mills. For such areas, compaction of the soil, covering with gravel, and/or application of a soil binder may be adequate erosion control measures for meeting Part 2.1.2.5.

Part 2.1.2.6 Management of Stormwater

This Part requires operators to divert, infiltrate, reuse, contain, or otherwise reduce stormwater to minimize pollutants in the discharge, and to employ practices that direct the flow of stormwater away from areas of exposed materials or pollutant sources. Such practices can also be used to divert polluted stormwater to natural areas or locations where other kinds of treatment occurs.

To meet this effluent limit, operators may consider vegetative swales, collection and reuse of stormwater, inlet controls, snow management, infiltration devices, and wet detention/retention basins.

In selecting, designing, installing, and implementing appropriate stormwater control measures, operators are encouraged to consult with EPA's resources relating to stormwater discharge management, including the sector-specific *Industrial Stormwater Fact Sheet Series*, (https://www.epa.gov/npdes/stormwater-discharges-industrial-activities#factsheets) and any similar state or tribal resources.

If infiltration is a selected control, operators should pay special attention to the discussion at the end of the section of the Fact Sheet entitled: *Stormwater infiltration control measures that meet the definition of a Class V Injection Well could be subject to the Underground Injection Control (UIC) Regulations*.

Stormwater Infiltration Control Measures Subject to the Underground Injection Control (UIC) Regulations

EPA promotes stormwater infiltration through green infrastructure as a cost-effective, sustainable, and environmentally friendly approach to stormwater management. The primary goals of this effort are to reduce stormwater discharge volume and contaminants, and sewer overflow events by using vegetation, soils, natural processes, and infiltration technologies to soak, store, infiltrate and/or treat stormwater. When implementing stormwater infiltration, operators should ensure that ground water is protected because under certain conditions, infiltration could allow contaminants to reach underground sources of drinking water. For example, certain geologic and hydrologic conditions could create ready pathways for pollutants in the stormwater to enter the receiving aquifers.

The Safe Drinking Water Act (SDWA) was established, in part, to protect the nation's drinking water. As required by SDWA, EPA established a regulatory program to prevent underground injection which endangers underground drinking water sources and promulgated regulations containing minimum requirements for state underground injection control (UIC) programs. (See 42 U.S.C. ' 300h-1; 40 C.F.R. Parts 144-146). Once EPA approves a state or tribal UIC program as meeting the requirements of SDWA and EPA's implementing regulations, the state or tribe has primary enforcement responsibility for the UIC program. If a state does not apply for primacy, EPA retains direct implementation authority. State, tribal, or federal UIC regulations would apply to any stormwater infiltration control measures that could be classified as an Injection Well.

EPA's regulations at 40 CFR 144.3 define "well injection" as the subsurface emplacement of fluids through a well. A "well" is defined as a bored, drilled or driven shaft, or dug hole whose depth is greater than its largest surface dimension; an improved sinkhole; or a subsurface fluid distribution system. *Subsurface fluid distribution system* means an assemblage of perforated pipes, drain tiles or other similar mechanisms intended to distribute fluids below the surface of the ground. Commercially manufactured or proprietary infiltration devices may fall into this category. *Improved sinkhole* means a naturally occurring karst depression or other natural crevice found in volcanic terrain and other geologic settings that has been engineered for the purpose of directing and emplacing fluids into the subsurface.

Infiltration control measures that are also injection wells would be subject to UIC regulations and would likely be classified as Class V Injection Wells. Most Class V wells are authorized by rule if operators submit inventory information to the proper authority (state, tribe, or EPA), do not endanger underground sources of drinking water, and are properly abandoned when no longer in use. An operator may also be required to get a Class V permit or take other actions to prevent potential degradation of underground sources of drinking water. Operators can find out the status of their state's UIC program at https://www.epa.gov/uic. On June 13, 2008, EPA issued a policy memo that clarified which green infrastructure stormwater infiltration practices have the potential to be regulated as Class V wells by the UIC program. A copy of this memo is available on EPA's website at: https://www.epa.gov/sites/production/files/2015-10/documents/epamemoinfiltrationclassvwells.pdf.

Part 2.1.2.7 Salt Storage Piles or Pile Containing Salt

This Part requires that operators enclose or cover piles completely or partially comprised of salt in order to minimize pollutant discharges. Operators must also implement appropriate measures to minimize the exposure of the piles during the adding to or removing from processes. Operators do not need to enclose or cover piles if stormwater from the piles is not discharged or if discharges from the piles are authorized under another NPDES permit.

Options for meeting the salt pile effluent limit include covering the piles or eliminating the discharge from such areas of the facility. Preventing exposure of piles to stormwater or run-on also eliminates the economic loss from materials being dissolved and washed away. A permanent under-roof storage facility is the best way to protect chemicals from precipitation and stormwater, but where this is not possible, salt piles can be located on impermeable bituminous pads and covered with a waterproof cover.

Part 2.1.2.8 Employee Training

This Part requires operators to train all employees who work in areas where industrial materials or activities are exposed to stormwater, or who are responsible for implementing activities necessary to meet the limits and conditions of the permit. This includes all members of the stormwater pollution prevention team identified in Part 6.2.1. The permit specifies the types of personnel and the tasks they perform that must be trained, so that they understand the MSGP's requirements and their specific responsibilities with respect to those requirements (e.g., personnel who are responsible for the design, installation, maintenance, and/or repair of controls including pollution prevention measures). For those personnel needing training, the following areas must be covered, if applicable to the person's duties:

- An overview of what is in the SWPPP;
- Spill response procedures, good housekeeping, maintenance requirements, and material management practices;
- The location of all controls on the site required by the permit, and how they are to be maintained;
- The proper procedures to follow with respect to the permit's pollution prevention requirements;
- When and how to conduct inspections, record applicable findings, and take corrective actions; and
- The facility's emergency procedures, if applicable per Part 2.1.1.

Training sessions should be conducted at least annually to assure adequate understanding of the objectives of the control measures and the individual responsibilities of each employee. More frequent training may be appropriate at facilities with high employee turnover or where stormwater programs are more complicated or multi-faceted. Often, training could be a part of routine employee meetings for safety or fire protection. Contractor personnel also must be trained in relevant aspects of stormwater pollution prevention, as appropriate.

Part 2.1.2.9 Non-Stormwater Discharges

This Part specifies that the operator must evaluate for the presence of non-stormwater discharges; the operator must eliminate any non-stormwater discharges not explicitly authorized in Part 1.2.2 or covered by another NPDES permit. Other than the exclusive list of authorized non-stormwater discharges listed in Part 1.2.2, non-stormwater discharges requiring NPDES permit coverage are not, per Part 1.1.3, authorized under the MSGP.

Additionally, Part 2.1.2.9 requires that all wash water, with the exception of discharges from pavement wash water and routine building washdown per Part 1.2.2, drain to a sanitary sewer, sump or other appropriate collection system (i.e., not the stormwater drainage system). Additionally, this permit does not authorize the discharge of vehicle and equipment wash water, including tank cleaning operations. These wastewaters must be covered under a separate NPDES permit, discharged to a sanitary sewer in accordance with applicable industrial pretreatment requirements, or disposed of otherwise in accordance with applicable law. Operators who need help in finding and eliminating unauthorized discharges may find the following guidance helpful: *Illicit Discharge Detection and Elimination: A Guidance Manual for Program Development and Technical Assessments*, Chapters 7, 8, 9 at: https://www3.epa.gov/npdes/pubs/idde_manualwithappendices.pdf.

Part 2.1.2.10 Dust Generation and Vehicle Tracking of Industrial Materials

This Part requires operators to control generation of dust and off-site tracking of raw, final, or waste materials in order to minimize pollutant discharges. Dust control practices can reduce the activities and air movement that cause dust to be generated. Airborne particles pose a dual threat to the environment and human health. Dust carried off-site increases the likelihood of water pollution. Control measures to minimize the generation of dust include:

- *Vegetative Cover.* In areas not expected to handle vehicle traffic, vegetative stabilization of disturbed soil is often desirable. Such a practice reduces wind velocity at ground level, thus reducing the potential for dust to become airborne.
- *Mulch.* Mulching can be a quick and effective means of dust control for a recently disturbed area.
- *Wind Breaks*. Wind breaks are barriers (either natural or constructed) that reduce wind velocity through a site which then reduces the possibility of suspended particles. Wind breaks can be trees or shrubs left in place during site clearing or constructed barriers such as a wind fence, snow fence, tarp curtain, hay bale, crate wall or sediment wall.
- *Stone*. Stone can be an effective dust deterrent in areas where vegetation cannot be established.
- *Spray-on Chemical Soil Treatments (Palliatives).* Examples of chemical adhesives include anionic asphalt emulsion, latex emulsion, resin-water emulsions and calcium chloride. Chemical palliatives should be used only on mineral soils. When considering chemical application to suppress dust, determine whether the chemical is biodegradable or water-soluble and what effect its application could have on the surrounding environment, including waterbodies and wildlife.

To reduce vehicle tracking of materials, the operator should keep stored materials or materials that could be spilled away from all roads within the site. Specific measures such as setting up a wash site or separate pad to clean vehicles prior to their leaving the site may be effective at minimizing pollutant discharges from vehicle tracking as well (provided the wash water is not discharged).

Part 2.1.3 Numeric Effluent Limitations Based on Effluent Limitations Guidelines

This Part provides the applicable federal effluent limitations guidelines that facilities must comply with. The following table describes where these limits can be found in the permit.

Table 2-1 Stormwater-Specific Effluent Limitations Guidelines

Regulated Activity	40 CFR Part/Subpart	Effluent Limitation
Discharges resulting from spray down or intentional wetting of logs at wet deck storage areas	Part 429, Subpart I	See Part 8.A.8
Runoff from phosphate fertilizer manufacturing facilities	Part 418, Subpart A	See Part 8.C.5
Runoff from asphalt emulsion facilities	Part 443, Subpart A	See Part 8.D.5
Runoff from material storage piles at cement manufacturing facilities	Part 411, Subpart C	See Part 8.E.6
Mine dewatering discharges at crushed stone, construction sand and gravel, or industrial sand mining facilities	Part 436, Subparts B, C, or D	See Part 8.J.10
Runoff from hazardous waste landfills	Part 445, Subpart A	See Part 8.K.7
Runoff from non-hazardous waste landfills	Part 445, Subpart B	See Part 8.L.11
Runoff from coal storage piles at steam electric generating facilities	Part 423	See Part 8.O.8
Runoff containing urea from airfield pavement deicing at existing and new primary airports with 1,000 or more annual non-propeller aircraft departures	Part 449	See Part 8.S.9

Part 2.2 Water Quality-Based Effluent Limitations

The 2021 MSGP includes water quality-based effluent limits (WQBELs) to ensure that MSGP authorized discharges will be controlled as necessary to meet applicable water quality standards, pursuant to CWA section 301(b)(1)(C) and 40 CFR 122.44(d)(1). The provisions of Part 2.2 constitute the WQBELs of the 2021 MSGP and supplement the permit's technology-based effluent limits in Part 2.1. The following is a list of the permit's WQBELs:

- Control discharges as necessary to meet applicable water quality standards of all affected states or tribes (See Part 2.2.1);

- Implement any additional measures that are necessary to be consistent with the assumptions and requirements of the applicable Total Maximum Daily Load (TMDL) and its wasteload allocation (WLA) (See Part 2.2.2.1). For discharges to impaired waters without a TMDL, conduct impaired waters monitoring (See Part 2.2.2.2). Additionally, new discharges to impaired waters must implement any measures required per the Part 1.1.6.2 eligibility requirements;
- Implement any additional measures that EPA determines are necessary to comply with applicable antidegradation requirements for discharges to Tier 2 or 2.5 waters (see Part 2.2.3).

Prior to or after initial discharge authorization, EPA may require operators to implement additional measures on a facility-specific basis, or require operators to obtain coverage under an individual permit, if information in the NOI, required reports, or other sources indicates that, after complying with the technology-based limits in Part 2.1 and the WQBELs in Part 2.2, discharges will not be controlled as necessary to meet water quality standards.

Facilities that achieve the permit’s technology-based limits through the careful selection, design, installation, and implementation of effective stormwater control measures are likely to be controlling their stormwater discharges to a degree that would make additional water quality-based measures unnecessary. However, to ensure that this is so, the permit contains additional provisions in Part 2.2, which, along with the BAT/BPT/BCT limits in the permit, are as stringent as necessary to achieve water quality standards.

The WQBELs included in the permit continue to be non-numeric. EPA relies on a narrative limit to ensure discharges are controlled as necessary to meet applicable water quality standards, and to ensure that additional measures are employed where necessary to meet the narrative WQBELs, or to be consistent with the assumptions and requirements of an applicable TMDL and its WLA, or to comply with a state or tribe’s antidegradation requirements. This is a reasonable approach for the 2021 MSGP, based on the following considerations:

- *Limited waterbody information available about individual dischargers*: EPA will not know prior to receiving NOIs where any new facilities are located and where they will discharge. In addition, existing facilities’ NOI data from earlier permits has typically been difficult to access, and this factor plus other NOI system limitations have restricted the number and quality of NOI reviews that EPA could do. Facility type and location, and receiving water information are necessary for EPA to determine what, if any, special protections apply to that water. To assist operators in determining their receiving water information, EPA has a tool in NeT that will automatically identify their receiving water(s) and impairment status. EPA’s receipt of the NOI and receiving water information may then trigger a review. For now, however, it is not possible to know what specific requirements apply to facilities *a priori*, and to include any such requirements in a general permit.
- *Review of the NOI and applicable watershed documents is the appropriate forum for deriving facility-specific WQBELs*: Once EPA receives an NOI for the new permit, the Agency will be better able to assess whether any more protective control measures are necessary. For instance, if an NOI indicates that the facility will discharge to an impaired waterbody with an EPA-approved or established TMDL, EPA can analyze the relevant information to determine whether any additional control measures are necessary to meet the permit’s effluent limits and whether discharges will be consistent with the TMDL and WLAs. If the operator is unwilling or unable to implement such additional control measures (or other measures that would yield the same results), EPA may notify the

facility that it is not eligible for MSGP coverage and must instead apply for an individual permit. EPA may undertake a similar assessment process when facilities indicate that they are discharging to a waterbody designated as Tier 2 or 2.5 for antidegradation purposes.

Part 2.2.1 Water Quality Standards

This Part specifies that operators must control their discharge as necessary to meet applicable water quality standards of all affected states. EPA expects that compliance with the other conditions in the 2021 MSGP (e.g., the technology-based limits, corrective actions) will result in discharges that are controlled as necessary to meet applicable water quality standards. However, if an operator becomes aware, or EPA determines, that a discharge is not controlled as necessary such that the receiving water of the United States will not meet applicable water quality standards, corrective actions are required per Part 5. In addition, any time EPA determines that the discharge is not meeting the WQBEL (i.e., the discharge is not controlled as necessary such that the receiving water of the United States will not meet applicable water quality standards), the Agency may inform the operator that additional measures are needed, or require that the operator instead apply for an individual permit. The same applies to situations where additional measures are necessary for discharges to be consistent with an available WLA in an EPA-established or approved TMDL. In such situations, EPA will be available to help operators understand what they need to do to ensure that their discharges are consistent with any available WLAs.

Part 2.2.2 Discharges to Water Quality-Impaired Waters

This Part includes the requirements applicable to stormwater discharges to impaired waters. Operators will be considered to discharge to an impaired water if the first water of the United States discharged to is:

- Identified by a state, tribe, or EPA, pursuant to Section 303(d) of the CWA, as not meeting an applicable water quality standard, or;
- Addressed by an EPA-approved or established TMDL, or;
- Not in either of the above categories but the waterbody is covered by a pollution control program that meets the requirements of 40 CFR 130.7(b)(1).

Part 2.2.2.1 Existing Discharge to an Impaired Water with an EPA-Approved or Established TMDL

This Part specifies EPA may inform operators that additional requirements are necessary for the discharge to be consistent with the assumptions and requirements of an applicable TMDL and its WLA. Water quality-based effluent limits must be “consistent with the assumptions and requirements of any available wasteload allocation for the discharge,” pursuant to 40 CFR 122.44(d)(1)(vii)(B). Where an operator indicates on its NOI that a discharge is to one of the types of waters this Part covers, EPA will review the applicable TMDL to determine whether it includes provisions that apply to the individual discharger or its industrial sector. If so, EPA will determine whether compliance with the existing permit limits is sufficient or what additional measures are necessary for the discharge to be consistent with the WLA. Alternatively, EPA may decide an individual permit application is necessary. Because WLAs for stormwater discharges may be specified in many different formats, it has not always been clear to operators what they need to do to ensure that their discharge is consistent with available WLAs. EPA has thus established a process to ensure that these requirements are properly interpreted and communicated by EPA to the facility in a way that isimplementable.

Part 2.2.2.2 Existing Discharge to an Impaired Water without an EPA-Approved or Established TMDL

This Part reiterates that facilities discharging to impaired waters without an EPA-approved or established TMDL must still control their discharges as necessary to meet water quality standards (as also required per Part 2.2.1). EPA expects an operator will achieve this if it complies with the other requirements in the permit, including monitoring requirements applicable to impaired waters discharges in Part 4.2.5. However, if information in the NOI, required reports, or from other sources indicates that discharges are not controlled as necessary to meet applicable water quality standards, EPA may inform an operator that it needs to implement additional measures on a site-specific basis to ensure the WQBEL is met, or, alternatively, of the need to apply for an individual permit.

Part 2.2.2.3 New Discharger or New Source to an Impaired Water

This Part requires an operator that is a "new source" or meet the definition of a "new discharger" (see Appendix A) that discharge to impaired waters to maintain for the permit term any control measures in good working order that it has implemented to meet the eligibility requirements of Part 1.1.6.2.

Part 2.2.3 Tier 2 Antidegradation Requirements for New Dischargers or Increased Discharges

This provision applies to new dischargers, new sources, and existing dischargers whose discharges directly to waters designated by a state or tribe as Tier 2 or 2.5 (defined in Appendix A) have increased. In general, any existing discharger required to notify EPA of an increased discharge consistent with Part 7.6 (i.e., a "planned changes" report) will be considered to have an increased discharge. For antidegradation purposes, such dischargers must implement any additional measures that EPA determines are necessary to comply with the permit's WQBEL, including the applicable state or federal antidegradation requirements (state and tribal water quality standards are required to contain an antidegradation policy pursuant to 40 CFR 131.12). EPA may also, per the applicable antidegradation policy, notify operators that they cannot be covered under the MSGP due to the unique characteristics of the discharge or the receiving waters, and that they must apply for an individual permit. Conversely, if EPA does not notify an operator that additional measures are needed to ensure compliance with antidegradation requirements, the operator is authorized to discharge under the permit. New dischargers to waters designated as Tier 3 outstanding national resource waters, as defined in 40 CFR 131.12(a)(3), are not eligible for coverage under the 2021 MSGP (see Part 1.1.6.3) and must apply for an individual permit.

Waters designated as Tier 2 by states and tribes can generally be described as follows: Tier 2 protects "high quality" waters -- waterbodies where existing conditions are better than necessary to support CWA section 101(a)(2) "fishable/swimmable" uses. Some states have designated waters using criteria which EPA considers to be more stringent than the federal Tier 2 designation, but less stringent than the federal Tier 3 designation. EPA calls such waters "Tier 2.5." Water quality may be lowered in Tier 2 or Tier 2.5 waters where "allowing lower water quality is necessary to accommodate important economic or social development in the area in which the waters are located." 40 CFR 131.12(a)(2). The process for making this determination is what is commonly known as "Tier 2 review." The essence of a Tier 2 review is an analysis of alternatives to the proposed new or increased discharge. 63 Fed. Reg. 36, 742, 36,784 (col. 1)(July 8, 1998). In no case may water quality be lowered to a level that would interfere with existing or designated uses. 40 CFR 131.12(a)(1), 122.44(d). States have broad discretion in identifying Tier 2 waters. 63 Fed. Reg.

at 36,782-83. In addition, states and tribes may adopt what is known as a "significance threshold." A "significance threshold" is a *de minimis* level of lowering of water quality below which the effects on water quality do not require Tier 2 review. *Id.* at 36,783.

Note about alternate antidegradation designations used by some states

Some states have adopted alternative approaches to designating Tier 2 or Tier 3 waters. These are collectively referred to as "Tier 2.5" waters since they fall between Tiers 2 and 3 in terms of characteristics and regulations supporting them. Tier 2.5 waters are commonly described as providing protection more stringent than Tier 2 but allowing some added flexibility that a Tier 3 outstanding national resource water would not. Refer to *Memorandum from William Diamond* (Former Director, Standards and Applied Science Division) *to Victoria Binetti* (Chief, Region III, Program and Support Branch), June 13, 1991.

Examples of Tier 2.5 waters exist in Massachusetts, which designates "outstanding resource waters" (ORWs). These waters have exceptional sociologic, recreational, ecological and/or aesthetic values and are subject to more stringent requirements under both the Massachusetts Water Quality Standards and the Massachusetts Stormwater Management Standards. ORWs include vernal pools certified by the Natural Heritage Program of the Massachusetts Department of Fisheries and Wildlife and Environmental Law Enforcement, all Class A designated public water supplies with their bordering vegetated wetlands, and other waters specifically designated. All of the provisions in the MSGP pertaining to Tier 2 waters apply equally to Tier 2.5 waters. And, where there is a reference in this Fact Sheet to Tier 2 waters, the reader should infer that EPA intends to include Tier 2.5 waters as well.

Part 2.3 Requirements Relating to Endangered Species, Historic Properties, and Federal CERCLA Sites

This Part requires operators to continue to implement any agreed-upon measures that were imposed as a condition or prerequisite for becoming eligible under Parts 1.1.4, 1.1.5, and/or 1.1.7 throughout the permit term. Any time an operator becomes aware, or EPA determines, that discharges and/or discharge-related activities are likely to adversely affect listed species and/or critical habitat, have an effect on historic properties, or that your facility discharges to a CERCLA Site in EPA Region 10 and listed in Appendix P after you have obtained coverage under this permit, EPA may impose additional measures on a site-specific basis, or require the operator to obtain coverage under an individual permit.

Part 3 Inspections

Part 3.1 Routine Facility Inspections

This Part was previously all one, larger section in the 2015 MSGP. For the 2021 MSGP, EPA has broken the section up into different parts (i.e., inspection personnel, areas that you must inspect, what you must look for during an inspection, and inspection frequency) to more clearly identify the requirements and improve permit readability for operators.

Part 3.1.1 Inspection Personnel

This Part requires that qualified personnel must perform the inspections. EPA clarifies that qualified personnel may be a member of the stormwater pollution prevention team, or if the qualified personnel is a third-party the operator hires (i.e., a contractor), at least one member of the stormwater pollution prevention team must participate in the inspection. Qualified personnel, as defined in Appendix A, are those who are knowledgeable in the principles and practices of industrial stormwater controls and pollution prevention, and who possess the education and ability to assess conditions at the industrial facility that could impact stormwater quality, and the education and ability to assess the effectiveness of stormwater controls selected and installed to meet the requirements of the permit. The inspector must consider the results of visual and analytical monitoring (if any) for the past year when planning and conducting inspections.

Part 3.1.2 Areas that You Must Inspect

This Part requires operators to conduct inspections during normal facility hours in areas including, but not limited to, the following:

- Areas where industrial materials or activities are exposed to stormwater;
- Areas identified in the SWPPP that are potential pollutant sources (see Part 6.2.3);
- Areas where spills and leaks have occurred in the past 3 years;
- Discharge points; and
- Control measures used to comply with the effluent limits contained in the permit.

Part 3.1.3 What Qualified Personnel Must Look for During an Inspection

This Part requires that the qualified personnel examine or look out for during an inspection including, but not limited to, the following:

- Industrial materials, residue or trash that may have or could come into contact with stormwater;
- Leaks or spills from industrial equipment, drums, tanks and other containers;
- Offsite tracking of industrial or waste materials, or sediment where vehicles enter or exit the site;
- Tracking or blowing of raw, final or waste materials from areas of no exposure to exposed areas;
- Erosion of soils at your facility, channel and streambank erosion and scour in the immediate vicinity of discharge points, per Part 2.1.2.5;
- Non-authorized non-stormwater discharges, per Part 2.1.2.9;
- Control measures needing replacement, maintenance or repair.

EPA added erosion and non-stormwater discharges as issues the operator must look out for during an inspection, as these requirements are mentioned in other parts of the permit but were not specifically called out as regular concerns to look for. EPA includes them in the inspection section so that operators do not overlook these issues on a regular basis during inspections which may help them comply with the other applicable parts.

Part 3.1.4 Inspection Frequency

This Part requires the qualified personnel to conduct inspections at least quarterly (i.e., once each calendar quarter), or in some instances more frequently (e.g., monthly). Increased frequency (i.e., more than quarterly) may be appropriate for some types of equipment, processes and stormwater control measures, or areas of the facility with significant activities and materials exposed to stormwater. For instance, because vehicle and equipment maintenance and cleaning are particularly dirty activities, EPA recommends that they are inspected more frequently. In addition, properly functioning controls for these activities, such as oil-water separators, are very important for an effective stormwater program, and should also be inspected more frequently (but in no case may be inspected less than quarterly). In another example, inspection of outdoor areas associated with regular industrial activity may benefit from more frequent inspections to ensure that the site is swept, garbage is picked up, drips and spills are cleaned, etc., on a regular basis. The operator must document the relevant inspection schedules in the SWPPP. During each calendar year, the operator must conduct at least one of the routine inspections during a period when a stormwater discharge is occurring. This inspection will enable operators to better identify sources of pollutants discharged via stormwater from the facility and to actively observe the effectiveness of control measures implemented to comply with effluent limits. Operators must also observe discharge points, as defined in Appendix A, during this inspection, or, if such discharge locations are inaccessible, inspect nearby downstream locations.

Part 3.1.5 Exceptions to Routine Facility Inspections for Inactive and Unstaffed Sites

Operators of inactive and unstaffed sites may invoke an exception from routine inspections if they eliminate all exposure of industrial activities and materials to stormwater and document this in the SWPPP. This waiver is available to all sectors covered under the 2021 MSGP. In addition, inactive and unstaffed mines covered under Sectors G, H, and J are eligible for this waiver even if all exposure has not been eliminated, due to the unique issues affecting such facilities, such as the remoteness of many mining sites. Facilities that make use of this waiver must still implement any necessary control measures to comply with applicable permit requirements and must still conduct an annual inspection.

Part 3.1.6 Routine Facility Inspection Documentation

This Part describes the specific information the operator must document for each routine inspection. Additionally, some industry sectors have specific routine inspection requirements, which are described in Part 8 of the permit for the relevant sectors. This Part specifies that the operator conduct any corrective action required as a result of a routine facility inspection consistent with Part 5 of the permit. This Part also clarifies that if a discharge visual assessment is performed during a routine facility inspection, the results of this assessment may be included in the same report as the routine facility inspection report. At a minimum, the operator must document the following for each routine inspection:

- The inspection date and time;
- The name(s) and signature(s) of the inspector(s);
- Weather information;
- All observations relating to the implementation of stormwater control measures at the facility, including:
    - A description of any stormwater discharges occurring at the time of the inspection;
    - Any previously unidentified stormwater discharges from and/or pollutant sources at the site;
    - Any evidence of, or the potential for, pollutants entering the stormwater drainage system;
    - Observations regarding the physical condition of and around all stormwater discharge points, including any flow dissipation devices, and evidence of pollutants in discharges and/or the receiving water;

  - Any stormwater control measures needing maintenance, repairs, or replacement.
- Any additional stormwater control measures needed to comply with the permit requirements;
- Any incidents of noncompliance; and
- A statement signed and certified in accordance with Appendix B, Subsection 11.

Part 3.2 Quarterly Visual Assessment of Stormwater Discharges

This Part was previously all one, larger section in the 2015 MSGP. For the 2021 MSGP, EPA has broken the section up into different parts (i.e., visual assessment frequency, visual assessment procedures, and visual assessment documentation) to more clearly identify the requirements and improve permit readability for operators.

Quarterly visual assessments of stormwater discharges provide a useful and inexpensive means for operators to evaluate the effectiveness of their control measures. Although the visual examination cannot assess the chemical properties of the facility's stormwater discharges, the examination will provide meaningful results upon which the operator may act quickly. All industrial sectors covered by the 2021 MSGP must conduct these examinations.

Part 3.2.1 Visual Assessment Frequency

This Part requires that operators collect and visually examine a grab sample of stormwater discharges from each discharge point (except as noted in Part 3.2.4) once each quarter for the entire permit term. These samples are not required to be collected consistent with 40 CFR Part 136 procedures but must be collected in such a manner that the samples are representative of the stormwater discharge. Guidance on monitoring is available at https://www.epa.gov/sites/production/files/2015-11/documents/msgp_monitoring_guide.pdf.

Part 3.2.2 Visual Assessment Procedures

This Part requires the operator to visually assess the sample in a clean, colorless glass or plastic container for the presence of color, odor, clarity, floating solids, settled solids, suspended solids, foam, oil sheen, and other obvious indicators of stormwater pollution. No analytical tests are required to be performed on these samples. The operator must take the grab samples within the first 30 minutes or a soon as practicable after the occurrence of an actual discharge from the site (including documentation of why sampling was not practicable within the first 30 minutes, if applicable). For storm events, operators must make the assessment on discharges that occur at least 72 hours (three days) from the previous discharge. The 72-hour (three-day) storm interval does not apply if the operator can document that less than a 72-hour (three-day) interval is representative for local storm events during the sampling period. Whenever the visual assessment shows evidence of pollutants discharged via stormwater, corrective action procedures must be initiated per Part 5.

Part 3.2.3 Visual Assessment Documentation

This Part requires the operator to document the results of the visual assessments in a report maintained onsite with the SWPPP. The report must include the sample location, date and time of both sample collection and visual assessment, personnel collecting the sample and performing visual assessments and their signatures, nature of the discharge (i.e., runoff or snowmelt), results of the observations, and probable sources of any observed stormwater contamination.

When conducting a stormwater visual examination, the pollution prevention team, or individual team member, must attempt to relate the results of the examination to potential sources of stormwater contamination on the site. For example, should an oil sheen be observed, facility personnel (preferably members of the pollution prevention team) must conduct an inspection of the area of the site draining to the examined discharge to look for sources of spilled oil, leaks, etc. If a source can be located, then this information would necessitate that the operator immediately conduct a clean-up of the pollutant source, and/or to revise control measures to minimize the contaminant source.

Part 3.2.4 Exceptions to Quarterly Visual Assessments

This Part includes the same exceptions from the 2015 MSGP to these requirements in order to account for circumstances during which conducting quarterly visual assessments may not be feasible, namely during adverse (e.g., dangerous) weather conditions, or in parts of the country subject to climates with irregular stormwater discharges, or to large amounts of snowfall. Where these types of conditions prevent a facility from performing these assessments quarterly, operators may modify their assessment schedule such that the four assessments are conducted over the course of the year during periods when discharges, be it from rain or snow, actually occur and can be safely observed.

Operators of inactive and unstaffed facilities may invoke a visual assessment exception if they eliminate all exposure of industrial activities and materials to stormwater and document this in the SWPPP. This waiver is available to all sectors covered under the 2021 MSGP. In addition, inactive and unstaffed mines covered under Sectors G, H, and J are eligible for this waiver even if all exposure has not been eliminated due to the unique issues affecting such facilities, such as the remoteness of many mining sites. Facilities that make use of this waiver must still implement any necessary stormwater control measures to comply with applicable permit requirements.

Operators with two or more essentially identical discharge points may also elect to conduct a visual assessment at just one of these discharge points each quarter, but must perform their quarterly assessments on a rotating basis to ensure that they periodically observe each substantially identical discharge point (SIDP) throughout the period of permit coverage. If the operator identifies stormwater contamination through visual monitoring performed at a SIDP, the operator must assess and modify his/her control measures as appropriate for each discharge point represented by the monitored discharge point. This approach ensures that operators will assess discharges from the entire site over the term of the permit and will address any identified problems at all SIDPs where the problem may be occurring.

Part 4 Monitoring

This Part was previously Part 6 in the 2015 MSGP. For the 2021 MSGP, EPA has moved it to Part 4, so that operators read the monitoring requirements before the corrective action and Additional Implementation Measures (AIM) requirements in Part 5 and the SWPPP documentation requirements in Part 6.

This Part requires that operators collect, analyze, and document stormwater samples consistent with the procedures described in within Part 6 and Appendix B, Subsections 10 – 12, and any additional sector-specific or state/tribal-specific requirements in Parts 8 and 9, respectively. All monitoring data collected under this Part is publicly available.

Part 4.1 Monitoring Procedures

The 2021 MSGP requires certain facilities to sample and analyze their stormwater discharges as a way to assess the effectiveness of stormwater control measures in meeting the effluent limits contained in the permit. Analytical monitoring measures the concentration of a pollutant in a stormwater discharge. Analytical results are quantitative and therefore can be used to compare discharge results and to quantify the effectiveness of stormwater control measures, including identifying pollutants that are not being sufficiently controlled.

Part 4.1 identifies procedures for collecting samples and identifies where, when, and what to sample. These requirements are unchanged from those in the 2015 MSGP, with the addition of an explicit clarification that composite sampling is allowed for indicator monitoring and benchmark monitoring. These requirements are in addition to the standard permit conditions described in Appendix B, Subsection B.10.

Part 4.1.1 Monitored Discharge Points

The monitoring requirements in the permit apply to each stormwater discharge point associated with industrial activity, unless the operator qualifies for the substantially identical discharge point (SIDP) exemption as described in this section (except for numeric effluent limitation monitoring; see below). This SIDP provision provides facilities that have multiple stormwater discharge points with a means to reduce the number of discharge points that must be sampled and analyzed while still providing monitoring data that are indicative of discharges from each discharge point. This may result in a substantial reduction of resources required for a facility to comply with analytical monitoring requirements. To be considered a SIDP, the discharge point must have generally similar industrial activities, stormwater control measures, exposed materials that may significantly contribute pollutants to stormwater, and runoff coefficients of their drainage areas. When operators believe their facility has two or more discharge points that qualify as SIDPs, they may monitor only one of these discharge points and report that the quantitative data also apply to the other SIDPs. Operators must also document the location of each of the SIDPs and explain why the SIDPs are expected to discharge substantially identical stormwater, addressing each of the factors to be considered in this determination (industrial activities, control measures, exposed materials and runoff coefficients). Operators do not need advance EPA approval for this determination; however, EPA may subsequently determine that discharge points are not substantially identical and require sampling of additional discharge points. EPA clarifies in Part 4.1.1 that the allowance for monitoring only one of the SIDPs is not applicable to any discharge point with numeric effluent limitations. Operators must monitor each discharge point covered by a numeric effluent limitation as identified in Part 4.2.3.

Part 4.1.2 Commingled Discharges

This Part requires that if stormwater discharges associated with industrial activity commingle with discharges not authorized by the MSGP (e.g., unregulated stormwater or other permitted wastewater), then the operator must sample the stormwater discharge before it mixes with the other discharges when practicable. This provision is intended to ensure that monitoring results are representative of discharges covered under the permit and not indicative of other discharges from the facility. EPA acknowledges that in certain instances, such as when authorized stormwater discharges are commingled with other waste streams prior to on-site treatment, sampling only authorized stormwater may beimpracticable.

Part 4.1.3 Measurable Storm Events

This Part specifies the characteristics of a measurable storm event as an event that results in a stormwater discharge from the permitted facility. By defining a storm event as one that results in a discharge, it affords the operator flexibility to sample during any storm event that produces a discharge, rather than having to ensure that a minimum magnitude is reached. The permit requires that operators collect samples from the discharge resulting from a storm event that occurs at least 72 hours (3 days) after a previous measurable storm event. The 72-hour (3-day) period is included in an attempt to eliminate monitoring discharges soon after a previous storm event may have washed away residual pollutants; operators may waive this requirement where they document that less than a 72-hour (3-day) interval is representative for local storm events during the season when sampling is being conducted. The permit allows for sampling of snowmelt in addition to stormwater. The 72-hour (3-day) requirement does not apply to snowmelt if the actual discharge is not clearly tied to a specific snow event (i.e., may be the accumulation from multiple events). The permit also specifies the type of documentation required to show consistency with this requirement.

Part 4.1.4 Sample Type

This Part specifies that operators must take a minimum of one grab sample, or alternatively a composite sample, from the measurable storm event being monitored. This will allow operators to make accurate comparisons of monitoring results to the corresponding benchmark threshold levels or effluent limitations.

For grab samples, operators must take the grab sample during the first 30 minutes of the discharge, except for snowmelt monitoring which has no 30-minute requirement since (1) discharge typically does not occur during a snow event (2) collecting a snowmelt sample within 30 minutes of commencement of discharge would very likely be impractical (because the snow will not have melted yet), and (3) the “first flush” effects of snowmelt are not as well defined (i.e., the time when the highest pollutant concentrations occur). If operators collect more than one grab sample, only those samples the operator collects during the first 30 minutes of discharge are to be used for performing any necessary analyses. If it is not possible to collect a grab sample during the first 30 minutes, facilities can take a grab sample as soon as possible, but the operator must document and keep with the SWPPP an explanation of why a grab sample during the first 30 minutes could not be collected.

EPA does not require composite sampling. EPA allows operators use composite sampling for indicator monitoring and benchmark monitoring if they choose to do so. Composite samples can provide a more comprehensive characterization of the facility’s discharge than individual grab samples but can be costlier in some ways. EPA had allowed facilities to use composite sampling in previous versions of the MSGP, but in this 2021 MSGP EPA is explicitly allowing composite sampling except for those parameters that require a short holding time before processing, such as pH and those parameters that can degrade or transform quickly. All indicator monitoring and benchmark monitoring, whether collected via grab samples or composite samples, must be analyzed consistent with 40 CFR Part 136 analytical methods and, for benchmark monitoring, using test procedures with quantitation limits at or below benchmark thresholds for all benchmark parameters for which you are required to sample.

Composite sampling may be manual or automated and must be initiated during the first 30 minutes of the same storm event. For manual sampling, a facility would collect multiple samples during a storm event and combine portions of each sample – or aliquots – to form a single composite sample that is then analyzed. For automated sampling, a facility would install an automatic sampler at the end of a flume, weir, or other similar device to direct the stormwater to a collection point. The sampler could be set up to collect samples on some interval, and, depending on the equipment, may be able to combine individual samples automatically into a composite sample. Automated samplers can also collect either flow-weighted or time-weighted composites. Using automated samplers can eliminate the need for a person to physically collect samples, which can be helpful if a storm happens outside of normal business hours. These samplers can lower labor costs and mitigate safety concerns but require setup and maintenance which would not otherwise be required if done manually.

Operators may also find that portable electronic meters, sensors, and data loggers used in the field can be a cost-effective way to monitor many types of parameters like turbidity, conductivity, temperature, dissolved oxygen, and pH in-situ. Where such in-situ measurements are taken, the composite sampling methodology shall be modified by simply calculating an average of all individual measurements, weighted by flow volume if applicable.

Part 4.1.5 Adverse Weather Conditions

When adverse weather conditions make sampling dangerous, storm event monitoring may be postponed until the next discharge event. This provision applies to serious weather conditions such as lightning, flash flooding, and high winds. This provision should not be used as an excuse for not conducting sampling under conditions associated with more typical storm events. Adverse weather conditions do not exempt operators from having to file a benchmark monitoring report in accordance with the corresponding reporting period. In many cases, sampling during a subsequent non-hazardous storm event may still be possible during the reporting period. Where this is not possible, operators are still required to report the inability to monitor as “no data” during the usual reporting period. This provision applies to all monitoring requirements of the permit.

Part 4.1.6 Facilities in Climates with Irregular Stormwater Discharges

This Part provides for the implementation of alternative monitoring schedules for facilities located in arid and semi-arid climates, or in areas subject to snow accumulation or prolonged freezing. Alternate monitoring schedules allow operators the flexibility to allocate their resources effectively to capture the required number of stormwater discharge events during the permit term. This flexibility will yield a more accurate characterization of pollutant concentrations in facility stormwater discharges during times of the year when precipitation is actually occurring, and during snowmelt discharges in areas subject to extended winter seasons and prolonged freezing. This special exception will provide EPA with more data that can be used to evaluate facility pollutant levels. Incumbent with this flexibility is operators’ responsibility to identify those periods during which discharges are most likely to occur and establish a schedule distributing the required monitoring events during those periods.

Part 4.1.7 Monitoring Periods

This Part specifies that the monitoring requirements commence during the first full calendar quarter following either May 30, 2021 or following the date of authorization to discharge, whichever date comes later. For quarterly benchmark monitoring, this Part defines the calendar quarters during which monitoring must occur and also describes when the first monitoring quarter is to commence. Operators in climates with irregular stormwater discharges may define alternate monitoring periods, as described above, provided that the operator keep documentation of the revised schedule with the SWPPP. Note that EPA's electronic discharge monitoring report (DMR) system, Net-DMR, will automatically generate pre-populated DMR forms based on the facility's sector and other information provided in the NOI form.

Part 4.1.8 Monitoring for Authorized Non-Stormwater Discharges

This Part states that operators are only required to monitor authorized non-stormwater discharges in Part 1.2.2 when they are commingled with stormwater discharges associated with industrial activity.

Part 4.1.9 Monitoring Reports

This Part specifies that monitoring data must be reported using EPA's electronic DMR tool, Net-DMR, as described in Part 7.3 (unless a waiver from electronic reporting has been granted from the applicable EPA Regional Office, in which case a paper DMR form may be submitted).

Part 4.2 Required Monitoring

The 2021 MSGP contains six types of monitoring requirements:

- Indicator monitoring (Part 4.2.1)
- Benchmark monitoring (Part 4.2.2);
- Effluent limitations monitoring (Part 4.2.3);
- State- or tribal-specific monitoring (Part 4.2.4);
- Impaired waters monitoring (Part 4.2.5); and
- Other monitoring required by EPA (Part 4.2.6).

Unless otherwise specified, samples must be analyzed consistent with 40 CFR Part 136 analytical methods that are sufficiently sensitive for the monitored parameter.

The frequency of monitoring depends on which of these six types of monitoring applies to each permitted facility. If any of these monitoring requirements overlap, operators may use a single sample to comply with those overlapping requirements. The permit also specifies that when an effluent limitation is lower than the benchmark threshold for the same pollutant,[6] the Additional Implementation Measure (AIM) trigger is based on an exceedance of the effluent limitation, which would subject the facility to the AIM requirements of Part 5.2. EPA reminds operators however that benchmark thresholds are not effluent limitations. See Part 4.2.2.

Per Part 1.3.7, in the event that the permit is administratively continued, monitoring requirements remain in force and effect at their original frequency during any continuance for operators that were covered prior to permit expiration. In the event that monitoring results are unable to be electronically reported in NetDMR, operators must maintain monitoring results and records with their SWPPP.

---

[6] Note that benchmarks thresholds are not effluent limitations, see Part 4.2.2 of the Permit.

Part 4.2.1 Indicator Monitoring

Part 4.2.1.1.a Indicator Monitoring for pH, TSS, and COD

The 2021 MSGP requires "report-only" indicator monitoring for pH, Total Suspended Solids (TSS), and Chemical Oxygen Demand (COD) for operators in subsectors without benchmark monitoring requirements: B2, C5, D2, E3, F5, I1, J3, L2, N2, O1, P1, R1, T1, U3, V1, W1, X1, Y2, Z1, AB1, AC1, and AD1. Indicator monitoring for these three parameters will provide a baseline and comparable understanding of industrial stormwater discharge quality, potential water quality problems, and stormwater control measure effectiveness for these operators.

These three parameters are appropriate as broad, low-cost indicators of stormwater pollution, as recommended in the 2019 National Research Council (NRC) study:

- "pH detects excess acidic or alkaline substances in the water, and pH excursions indicate corrosive (acidic or basic) and/or toxic concerns. Stormwater discharges that are excessively polluted may not exhibit problems with respect to pH. However, pH excursions that are highly acidic or highly alkaline and do not fall into the benchmark range (6.0–9.0) can be indicative of a major polluting event or process failure and can be impactful to receiving waters. Unexpected pH values also can indicate that a stormwater treatment system is not operating properly" (NRC, 27-28).
- "Total Suspended Solids (TSS) is a measure of suspended particulate matter in a water sample. Particulate matter can result from erosion of industrial soils, deposited particulate matter on the drainage area, erosion/corrosion of materials present on the site, and general overall site cleanliness. TSS also provides information about possible high concentrations of numerous other pollutants that will partition onto particulate matter, including phosphorus, many heavy metals, and many hydrophobic organic chemicals" (NRC, 28).
- "Chemical Oxygen Demand (COD) is a surrogate measure of organic pollutants in water (through measurement of oxygen demand). It is a conventional water quality parameter with established industrial stormwater benchmarks. In addition to the measure of oxygen demand, high COD can also be indicative of oils and hydrocarbon pollution and, as with TSS, can be an indicator of overall site cleanliness. Increases in COD could also indicate problems with the treatment SCM effectiveness, including the need for maintenance" (NRC, 27).

The NRC study states that pH, TSS, and COD are direct measures of water quality and can be indicators of broader water quality problems and the presence of other pollutants. In addition, the study says these parameters can indicate absence, neglect, or failure of a stormwater control measure, which can lead to high concentrations of potential pollutants (NRC, 28).

Although the NRC study recommended that EPA implement some type of "industry-wide" or "universal" benchmark monitoring for these parameters for all sectors, for the 2021 MSGP, EPA is requiring indicator monitoring for pH, TSS, and COD as "report-only" for operators in the 22 subsectors without sector-specific benchmarks. Indicator monitoring for these subsectors is appropriate, given that the 2015 MSGP only required sector-specific benchmark monitoring for around 55 percent of MSGP subsectors; the other 45 percent of subsectors did not have any chemical-specific analytical benchmark monitoring, meaning these operators were only conducting visual monitoring and collecting little, if any, numeric data on performance of their stormwater control measures to further ensure compliance with water quality standards. The 2021 MSGP suspended benchmark monitoring for iron, resulting in the elimination of benchmark monitoring requirements for subsectors L2 and O1. With these changes, 22 subsectors under the 2021 MSGP without sector-specific benchmark monitoring, around 40 percent of total facilities, are now required to conduct indicator monitoring for pH, TSS, and COD.

Indicator monitoring for applicable operators is required on a quarterly basis for the entirety of permit coverage as "report-only." Unlike sector-specific benchmark monitoring, indicator monitoring cannot be discontinued at any time during permit coverage. Indicator monitoring also does not have a threshold or baseline value for comparison, therefore no follow-up action is triggered or required based on the sampling results in this part. The requirement in Part 2.2.1 to meet applicable water quality standards still applies. Operators may find it useful to evaluate and compare indicator monitoring data over time to identify any fluctuating values and why they may be occurring, and further inform any revisions to your SWPPP/SCMs if necessary. Examples of possible appropriate reviews and revisions to the SWPPP/SCMs based on high indicator monitoring values include: reviewing sources of pollution or any changes to performed industrial activities and processes; reviewing spill and leak procedures, and/or non-stormwater discharges; conducting a single comprehensive clean-up, implementing a new stormwater control measure, and/or increasing inspections. EPA encourages operators to proactively use their sampling results to understand where the SCMs are working if values are low and improve their stormwater management program if values are high, relative to other samples. Based on indicator monitoring data collected and analyzed under the 2021 MSGP, which will be publicly available as with all other monitoring data under the MSGP, EPA may evaluate whether sector/subsector-specific benchmarks are warranted in a future proposed permit. For the next proposed MSGP, EPA will also evaluate the indicator monitoring data to inform any future proposed changes in this requirement, including applicability and frequency.

EPA emphasizes that indicator monitoring parameters are neither benchmark monitoring nor numeric effluent limitations. However, failure to conduct and report indicator monitoring is a permit violation. This part does not replace or modify any requirement for operators that must monitor for pH, TSS, and/or COD under any other type of required monitoring, including as a sector-specific benchmark, annual monitoring for impaired waters, and annual effluent limitations guidelines monitoring.

Part 4.2.1.1.b Indicator Monitoring for PAHs

Background

The 2021 MSGP requires indicator monitoring for PAHs for the following operators, given the types of activities they may conduct: operators in all sectors with stormwater discharges from paved surfaces that will be initially sealed or re-sealed with coal-tar sealcoat where industrial activities are located during coverage under this permit; operators in sectors A (facilities that manufacture, use, or store creosote or creosote-treated wood in areas that are exposed to precipitation), C (SIC Code 2911), D, F, H, I, M, O, P (SIC Codes 4011, 4013, and 5171), Q (SIC Code 4491), R, and S. Facilities in the specified sectors must monitor for PAHs bi-annually (i.e., sample twice per year) in their first and fourth years of permit coverage. EPA plans to use the monitoring data collected to conduct an initial quantitative assessment of the levels of PAHs in industrial stormwater, further identify industrial activities with the potential to discharge PAHs in stormwater, and inform future consideration of PAH benchmark monitoring for sectors with the potential to discharge PAHs in stormwater.

Polycyclic Aromatic Hydrocarbons

PAHs are a group of chemicals that are persistent in the environment. PAHs have both natural and man-made sources. Natural sources include wildfires, volcanic eruptions, and degradation of materials within sediments and fossil fuels. Man-made sources include the incomplete burning of organic materials like coal, oil, gas, wood, and garbage, vehicle exhaust, asphalt, coal-tar sealcoat, and creosote (ATSDR, 2011; EPA, 2009; CDC, 2009). According to the U.S. Department of Health and Human Services, coal tars and coal-tar pitches are known to be human carcinogens based on studies in humans and 15 PAHs are listed as “reasonably anticipated to be human carcinogens” (2014).

PAHs are listed on EPA’s Toxic Pollutants list at 40 CFR 401.15. The Toxic Pollutant List was developed in 1976 and subsequently added to the CWA by Congress in 1977. The list was intended to be used by EPA and states as a starting point to ensure that Effluent Guidelines regulations, water quality criteria and standards, and NPDES permit requirements addressed the problems of toxics in waterways (EPA, 2020).

The Toxic Pollutants list consisted of broad categories of pollutants rather than specific, individual pollutants. Therefore, EPA developed the Priority Pollutant List in 1977 to make implementation of the Toxic Pollutant List more practical for water testing and regulatory purposes. The list of 126 Priority Pollutants can be found in 40 CFR Part 423 (Appendix A). Of the hundreds of known PAHs, EPA has designated 16 as Priority Pollutants: naphthalene, acenaphthylene, acenaphthene, fluorene, phenanthrene, anthracene, fluoranthene, pyrene, benzo[a]anthracene, chrysene, benzo[b]fluoranthene, benzo[k]fluoranthene, benzo[a]pyrene, benzo[g,h,i]perylene, indeno[1,2,3-c,d]pyrene, and dibenz[a,h]anthracene.

Many PAHs can have impacts on human health and the environment. Several PAHs have been shown to be extremely toxic to and bioaccumulate in fish and aquatic invertebrates, and are known or probable human carcinogens (EPA Integrated Risk Information System (IRIS) 2014; NRC, 2019; Scoggins, 2007; U.S. Department of Health and Human Services, 2014).

One study in coastal South Carolina performed ecological and human health screening assessments of sediment data from two other studies (Weinstein, 2010). The authors calculated ratios using the mean individual PAH levels in the pond sediments to the published preliminary remediation goals (PRG) for that individual PAH (PRG-HQ). Values less than 1 were considered health protective of human exposures. The authors found that four commercial ponds, one low density residential pond, and one golf course pond had PRG-HQ values greater than one for several carcinogenic PAHs and suggested that further study was warranted.

Although EPA does not have national recommended aquatic life criteria for individual or total PAHs, some states have developed criteria for certain individual PAHs (e.g., Illinois, Kansas, Colorado, and Arizona). In addition, EPA has not required any PAH benchmark monitoring requirements for any sector covered under the MSGP. The NRC study recommended that EPA collect data or require monitoring related to PAHs in the MSGP to determine an adequate surrogate or if additional PAH monitoring is warranted (NRC, 2019).

Indicator Monitoring for PAHs Related to the Use of Coal-Tar Sealcoat

Some industrial facilities covered under the MSGP use coal-tar sealcoat to initially seal or to re-seal their paved surfaces where industrial activities are located. These surfaces could potentially release PAHs into the environment when exposed to precipitation resulting in stormwater discharges of PAHs. Operators who, during coverage under the permit, use coal-tar sealcoat to initially seal or to re-seal their paved surfaces where industrial activities are located and thereby may discharge PAHs via stormwater, must conduct indicator monitoring for PAHs.

PAHs and Coal-tar Sealcoat

Coal-tar sealcoat is a type of sealant used to maintain and protect driveway and parking lot asphalt pavement. Coal-tar sealcoat typically contains 20 to 35% coal tar pitch which is made up of 50% or more PAHs by weight (Mahler et al., 2005).

Coal-tar sealcoat, like other pavement, is exposed to the elements and undergoes weathering and abrasion that can cause dust and particles containing PAHs to break off. Dust and particles containing PAHs can then be picked up by stormwater and transported to stormwater control measures or directly discharged to receiving waters where it can accumulate in sediments and soils. Manufacturers recommend reapplying the sealants every two to three years due to wear/abrasion (Link).

Studies have observed sub-lethal effects of coal-tar sealcoats particles in sediments for both amphibians (Bommarito et al., 2010; Bryer and Willingham, 2006) and benthic macroinvertebrates (Scoggins et al., 2007). Studying cell lines from specific organisms can help to identify effects of treatments such as cell-level genetic abnormalities and damage under controlled conditions. A study examined non-transformed rainbow trout Waterloo1(RTS-W1) fish liver cell line that was exposed to runoff collected up to 36 days after coal-tar sealcoat application. This study found the runoff to be genotoxic, meaning that damage to cell-leveled genetic material was caused by exposure and significant genotoxicity occurred with a 1:100 dilution of runoff (Kienzler et al., 2015).

As referenced in Van Metre et al. (2009), anecdotal reports indicate that use of coal-tar sealcoat is higher east of the Continental Divide than west of the Continental Divide, where use of asphalt-based sealcoat is higher. A geographical trend in the use of coal-tar sealcoat would be consistent with the fact that integrated steel and coke processing industries (of which coal tar pitch is a by-product) were historically located east of the Continental Divide for resource and economic reasons during the 19th and 20th centuries. More prevalent use of coal-tar sealant in the east and limited use in the west may also explain why watershed studies from the east and west coasts show disparate PAH loading concentrations from coal-tar sealant.

On the east coast, the New York Academy of Sciences completed a report in 2007 on pollution prevention and management strategies for PAHs in the New York/New Jersey Harbor (Valle et al., 2007). Surfaces sealed with refined coal tar-based sealants are listed as 1 of 11 major sources that each contribute more than 2 percent of the total PAHs released to air, water, or land. Using yields calculated in Mahler et al. (2005) and estimates of the amount of sealed surface area in the watershed, the authors estimated that between 900 and 5800 kg of particulate-bound PAHs were released per year from surfaces sealed with coal-tar sealants in New York/New Jersey Harbor. The study also acknowledges that these estimates are likely on the low end given that “certain weather conditions, not captured in the estimated yields, will induce degradation of the sealant, and that volatilization of PAHs is not captured by this approach.”

West of the continental divide, the Washington State Department of Ecology conducted a watershed-wide analysis in the Puget Sound to estimate toxic pollutant loadings through major pathways such as surface water runoff and to provide data on pollutant concentrations in surface runoff from different land cover types, including commercial/industrial. This analysis found that combustion emissions and releases from creosote-treated wood account for most of the PAH release in the Puget Sound basin.

Coal-tar sealant accounted for less than 1 percent of PAH releases as compared to other sources, ranging from 0.9 to 1.7 tons per year, or approximately 816 to 1,542 kg/year (Ecology and King County, 2011).

Studies on Stormwater, PAHs, and Coal-tar Sealcoat

Primary Data Collection

Researchers often collect stormwater and other water and soil samples in the field and perform bench scale studies in the laboratory to assess the type and contribution of pollutants to the environment. These primary data studies have evaluated the contribution of PAHs from coal-tar sealcoat. Several studies have found that PAHs can be significantly elevated in stormwater discharged from coal-tar sealed parking lots and other areas compared to stormwater from areas that do not use coal-tar sealants. Specifically, an EPA simulation study of stormwater included both bench-scale panels and full-scale test plots, which included three test plots with different or no surface treatments: coal tar emulsion sealant, asphalt emulsion sealant, and unsealed. The results of this study indicated that coal-tar sealcoat releases 100 to 1,000 times more PAHs than other types of surfaces (Rowe and O'Conner, 2011). A separate study collected simulated runoff in Austin, Texas, from 13 urban parking lots. Six parking lots were sealed with coal-tar sealcoat, three parking lots were sealed with asphalt-based sealcoat, two parking lots were unsealed asphalt pavement, and two parking lots were unsealed concrete pavement. This study found that the amount of PAHs in stormwater from coal-tar sealed parking lots was 65 times higher compared to stormwater from unsealed parking lots. The study also found that concentrations for total dissolved PAH were about an order of magnitude greater in samples from the three coal-tar-sealed test plots than concentrations in samples from the two asphalt-sealed test plot, which in turn were about an order of magnitude greater than those from the unsealed test plot (Mahler et al., 2005).

Several studies have evaluated the concentration of PAHs in either stormwater runoff or receiving stream sediments in relation to when the coal-tar sealcoats were applied. One of these studies indicated that the concentrations of PAHs in stormwater runoff are highest following the application of coal-tar sealcoat and decrease as continued weathering of the sealcoat occurs (Rowe and O'Connor 2011). Two other studies analyzed PAHs in sediment samples collected before Austin, Texas, banned the use of coal-tar sealants and after the ban took effect. The first, studying the impacts two years after the ban took effect, found no significant difference before and after the ban (DeMott et al., 2010), but the second, studying the impacts six to eight years after the ban, observed decreases of PAHs in the sediment (Van Metre and Mahler, 2014).

Modeling Studies

Scientists have also used various analyses related to source apportionment to determine the relative contributions of various sources of PAHs. Many source apportionment studies have confirmed the results of primary data studies that where coal-tar sealcoat is used, PAHs are present at elevated levels. A study looked at PAHs in 40 urban lakes across the U.S. using a contaminant mass-balance receptor model based on discussed assumptions in the study and found that on average, coal-tar sealcoat is the largest source of PAHs (Van Metre and Mahler, 2010). Norris and Henry (2019) also analyzed previously collected sediment data from both the Lady Bird Lake and the 40 lakes studies (Van Metre and Mahler, 2010; Van Metre and Mahler, 2014). They used these data to apportion sources of PAHs using the Unmix Optimum (Unmix O) receptor model. The results of both the Unmix O and chi-square approach found that coal-tar sealant contributes to lake sediments and over 80% of PAHs contained in lake samples from the eastern and central region of the United States were from coal-tar sealants (Norris and Henry, 2019). This study is consistent with results in Van Metre and Mahler (2010) and Van Metre and Mahler (2014) that coal-tar sealcoat contributes PAHs into the environment and that coal-tar sealcoat's contribution to sediments decreased after Austin banned the use of coal-tar sealcoat in 2006. The Norris and Henry (2019) study alone was not integral to EPA's proposed inclusion of the eligibility requirement on the use of coal-tar sealcoat. In addition, PAH discharges from coal-tar sealcoat may accumulate in the sediment of stormwater ponds. Dredging of accumulated sediments in stormwater ponds is a key maintenance activity and disposal of dredged PAH-contaminated sediment may be expensive (Mahler et al., 2012).

Although certain modeling studies have shown that PAHs from coal-tar sealant are present in stormwater at elevated levels, there has been some acknowledgement that the variability of PAH concentrations in different sources is a challenge for all source apportionment models because these models assume PAH source compositions are relatively constant, even though source composition can change between the source and where the concentration measurement is taken (the receptor) (Norris and Henry, 2019). A recent letter to the editor has raised questions on the validity of the source profiles used in some source apportionment studies (O'Reilly and Edwards, 2019), while another noted the challenges with PAH source apportionment to coal-tar sealcoat given the variety of PAH sources in the environment (Zou et al., 2015). A review of existing literature on the potential effects of runoff coal-tar sealcoat on aquatic organisms concluded that although "an abundance of literature has shown that PAHs cause mutagenicity, genotoxicity, and development toxicity," other research studying the particular effects of coal-tar sealcoat in runoff in controlled laboratory tests may overestimate potential adverse effects in the field (Driscoll et al., 2019).

Potential Product Alternatives

EPA has identified potential alternatives (i.e., similar product use and cost) to coal-tar sealcoat including asphalt emulsion sealants and acrylic sealants. These alternatives can achieve similar performance but contain fewer PAHs, and their use is expected to result in a lesser amount of PAHs discharged in industrial stormwater. For example, asphalt sealant has negligible PAH levels and is considered significantly less harmful to water quality and the environment than coal-tar based sealant (USGS, 2019). Given the comparable costs among products, EPA assumes that most facilities who intend to use coal-tar sealcoat will be able to find a product alternative at negligible cost difference yet with similar performance (see Section B.1 of the Cost Analysis for this proposed permit in the docket). Other product substitute examples like pervious concrete, permeable asphalt and paver systems do not require sealants and allow stormwater to infiltrate, resulting in decreased discharge, but may not be appropriate for use with all industrial activities.

Indicator Monitoring for PAHs for Specific Sectors

Some industrial facilities covered under the MSGP use, handle, or generate chemicals and products that could potentially release PAHs into the environment when exposed to precipitation that results in a stormwater discharge. EPA reviewed the industrial stormwater program's fact sheet series, performed a literature review of industrial activities that have the potential to contribute PAHs in stormwater, and conducted an industry analysis of industrial process wastewater discharges. These reviews related to industrial activities informed the 2021 MSGP requirements for specific sectors to perform indicator monitoring for PAHs. A summary of these analyses is provided below, followed by EPA's determination of the sectors requiring indicator monitoring based on these analyses.

Review of Industrial Stormwater Fact Sheet Series

EPA's industrial stormwater fact sheet series identifies common activities, pollutant sources, and associated pollutants for each of the 29 sectors permitted under the MSGP. EPA reviewed the fact sheets for activities that list the following as associated pollutants that may contain petroleum hydrocarbons:

- Ash
- Benzene
- Coal
- Diesel
- Engine oil
- Fuel
- Fuel additives
- Gasoline
- Grease
- Hydraulic fluid
- Hydrocarbons
- Jet fuel
- Liquid polymer
- Lubricants
- Naphthalene
- Oil and Grease
- Oil
- PAHs
- Petroleum hydrocarbons
- Phenanthrene
- Lubricants
- Tire rubber
- Toluene
- Waxes
- Xylenes

Based on information in the industrial stormwater fact sheet series, the most common industrial activities with the potential for petroleum hydrocarbon exposure to precipitation that could result in the discharge of PAHs in stormwater include the following: materials loading and unloading, storage, handling, and waste management and disposal (18 sectors); equipment/vehicle maintenance, repair, and storage (24 sectors); vehicle fueling (17 sectors); and storage of materials in above-ground tanks (7 sectors). EPA identified other industrial activities with potential for petroleum hydrocarbon exposure, but because of these activities' relative infrequency and association with a limited number of sectors, EPA did not include them in this requirement.

Literature Review

Based on the most common industrial activities identified above that have the potential for petroleum hydrocarbon exposure, EPA performed a literature review for each industrial activity to determine the potential to discharge PAHs in stormwater. EPA also reviewed literature for certain sectors with the highest identified number of industrial activities with petroleum hydrocarbon exposure to precipitation or that were suspected of having the potential for exposure based on the materials used, manufactured, or stored on-site. In addition, EPA reviewed references provided in public comments that were submitted on the proposed 2020 MSGP. The literature review is included in the docket for this permit (ID# EPA-HQ-OW-2019-0372).

Industry Analysis

EPA also conducted an industry analysis that looked at sectors/subsectors included in the 2015 MSGP that may have petroleum hydrocarbons at their facilities that could be exposed to stormwater. The analysis looked at industrial process wastewater discharges as a proxy to identify industries that may use, handle, or generate PAHs. EPA evaluated 18 PAHs identified as priority pollutants subject to the required water quality criteria in the National Toxics Rule (NTR) at 40 CFR 131.36. Note that the data evaluated were for industrial process wastewater discharges, not stormwater. However, these data are useful to identify and further evaluate industries that may use, handle, or generate PAHs on site. The full analysis is included in the docket for this permit (ID# EPA-HQ-OW-2019-0372). EPA identified the following subsectors and related activities that have total PAH loadings for industrial process wastewater discharges of greater than 1 kg/year:

Table 4-1 PAH Loadings for Industrial Process Wastewater Discharges

Applicable MSGP Sub-Sector	Activity Represented	Contributing SIC Codes[1]	Estimated PAH Pollutant Load in Industrial Processed Wastewater (kg/year)
C5	Industrial Organic Chemicals; Petroleum Refining	2865, 2869, 2911	131,073[2]
Q1	Water Transportation Facilities	4491, 4493	6,351[3]
C4	Plastics Materials and Synthetic Resins, Synthetic Rubber, Cellulosic and Other Manmade Fibers Except Glass	2821, 2822	3,270[4]
F1	Steel Works, Blast Furnaces, and Rolling and Finishing Mills	3312, 3313, 3317	628[5]
C2	Industrial Inorganic Chemicals	2812,2813, 2819	491[6]
C3	Soaps, Detergents, and Cleaning Preparations; Perfumes, Cosmetics, and Other Toilet Preparations	2843	287
Y2	Miscellaneous Plastic Products; Musical Instruments; Dolls, Toys, Games, and Sporting and Athletic Goods; Pens, Pencils, and Other Artists' Materials; Costume Jewelry, Costume Novelties, Buttons, and Miscellaneous Notions, Except Precious Metal; Miscellaneous Manufacturing Industries	3081	282
P1	Railroad Transportation; Local and Highway Passenger Transportation; Moto Freight Transportation and Warehousing; United States Postal Service; Petroleum Bulk Stations and Terminals	4011, 4013, 4213, 4226, 4231, 5171	253[7]
A2	Wood Preserving	2491	251
A1	General Sawmills and Planing Mills	2421	206
AC1	Computer and Office Equipment; Measuring, Analyzing, and Controlling Instruments; Photographic and Optical Goods, Watches, and Clocks; Electronic and Electrical Equipment and Components, Except Computer Equipment	3624	164
D2	Miscellaneous Products of Petroleum and Coal	2992, 2999	90
C1	Agricultural Chemicals	2873	46
I1	Crude Petroleum and Natural Gas; Natural Gas Liquids; Oil and Gas Field Services	133, 1321, 1389	11[8]
M1	Automobile Salvage Yards	5012	6.9
S1	Air Transportation Facilities	4581	4.9
F5	Primary Smelting and Refining of Nonferrous Metals; Secondary Smelting and Refining of Nonferrous Metals; Miscellaneous Primary Metal Products	3334, 3399	3.7[9]
AB1	Industrial and Commercial Machinery, Except Computer and Office Equipment; Transportation Equipment Except Ship and Boat Building and Repairing	3523, 3537, 3713, 3714, 3721, 3724, 3743	1.4[10]

1. Applicable SIC Codes with reported total PAH loadings used in calculating the estimated total annual pollutant load.
2. Petroleum refining (SIC Code 2911); and industrial organic chemicals, not elsewhere classified (SIC Code 2869) accounts for most of the loading identified in this sector (130,571 kg/year and 496 kg/year, respectively).
3. Marinas (SIC Code 4491) account for most of the estimated loading identified in this sector (6,379 kg/year).
4. Plastics materials, synthetic resins, and nonvulcanizable elastomers (SIC Code 2821) accounts for most of the estimated loading identified in this sector (3,265 kg/year).
5. Steel works, blast furnaces (including coke ovens), and rolling mills (SIC Code 3312); and electrometallurgical products, except steel (SIC Code 3313) account for most of the estimated loading identified in this sector (589 kg/year and 39 kg/year, respectively).
6. Industrial inorganic chemicals, not elsewhere classified (SIC Code 2819); and alkalies and chlorine (SIC Code 2812) account for most of the estimated loading identified in this sector (440 kg/year and 51 kg/year, respectively).
7. Petroleum bulk stations and terminals (SIC Code 5171); railroads, line-haul operating (SIC Code 4011); and special warehousing and storage, not elsewhere classified (SIC Code 4226) account for most of the estimated loading identified in this sector (146 kg/year, 85 kg/year, and 22 kg/year, respectively).
8. Oil and gas field services, not elsewhere classified (SIC Code 1389); and crude petroleum and natural gas (SIC Code 1311) account for most of the estimated loading identified in this sector (9 kg/year and 2 kg/year, respectively).
9. Primary production of aluminum (SIC Code 3334) accounts for most of the estimated loading identified in this sector (3 kg/year).
10. Aircraft engines and engine parts (SIC Code 3724) account for most of the estimated loading identified in this sector (0.9 kg/year).

Sectors with Potential for PAH Exposure to Precipitation Resulting in Stormwater Discharges

Based on the industrial stormwater fact sheet series review, literature review, and industry analysis, EPA determined that the following sectors have the potential to contribute PAHs in stormwater discharges. At this point, however, EPA has determined that additional information is necessary to quantify the levels of PAHs in industrial stormwater, further identify industrial activities with the potential to discharge PAHs in stormwater, and inform future consideration of PAH benchmark monitoring for sectors with the potential to discharge PAHs in stormwater.

Sector A: Timber Products

The industrial stormwater fact sheet series identifies the following industrial activities with potential for petroleum hydrocarbon exposure to precipitation that could result in the discharge of PAHs in stormwater for Sector A:

- Equipment/vehicle maintenance, repair, and storage.
- Vehicle fueling.
- Wood preservation activities and chemicals and preserved wood storage.
- Wood assembly/fabrication activities and final fabricated wood product storage.

Coal-tar creosote is a commonly used wood preservative derived from coal-tar and is known to contain high levels of PAHs (ATSDR, 2002). Several studies have shown that facilities that use or previously used creosote to treat wood and the storage of creosote-treated wood have the potential to contribute to PAH contamination of soils and stormwater discharges (Van Zuydam, 2009; Ragan, 2011; Pietari, 2016; Konkler, 2020; Valle, 2007; Hussain, 2018; Brooks, 2004; Meador, 1995; Marcotte, 2014; Niera, 2016). Due to the potential for PAH contamination of stormwater from creosote, the 2021 MSGP requires indicator monitoring for PAHs for Sector A facilities but is limited to those facilities that manufacture, use, or store creosote or creosote-treated wood in areas that are exposed to precipitation.

Sector C: Chemicals and Allied Products

The industrial stormwater fact sheet series identifies the following industrial activities with potential for petroleum hydrocarbon exposure to precipitation that could result in the discharge of PAHs in stormwater for Sector C:

- Materials loading and unloading, storage, handling, and waste management and disposal.
- Equipment/vehicle maintenance, repair, and storage.
- Vehicle fueling.

Petroleum refineries process raw crude oil into fuel products (e.g., gasoline, fuel oils, jet fuels, coke and kerosene), nonfuel products (e.g., asphalt and road oil, lubricants), and petrochemicals and petrochemical feedstocks. Spills or leaks of crude oil and petroleum products have been documented as sources of PAH contamination in surface waters (Mahler, 2001; Zychowski, 2017; Troisi, 2016; Meador, 1995; Collier, 2013; Albers, 2003; Hussain, 2018). One study showed elevated levels of PAHs in agricultural soils near an oil refinery (Bayat, 2015), while others observed elevated PAHs in waters downstream of refineries (Nascimento, 2017; Stein, 2006).

Additionally, EPA's industry analysis indicated that Subsector C5 has a total estimated PAH pollutant load in industrial wastewater of 131,073 kg/year, the highest estimated PAH pollutant loading of the MSGP subsectors evaluated. Petroleum refining (SIC Code 2911) accounts for most of the estimated industrial wastewater loading identified in this sector (130,571 kg/year).

Based on the potential for spills and leaks of crude oil and petroleum products and the observed elevated levels of PAHs in surface waters downstream of refineries, the 2021 MSGP requires indicator monitoring for PAHs for Sector C facilities with SIC Code 2911 (petroleum refineries).

Sector D: Asphalt Paving and Roofing Materials and Lubricants

The industrial stormwater fact sheet series identifies the following industrial activities with potential for petroleum hydrocarbon exposure to precipitation that could result in the discharge of PAHs in stormwater for Sector D:

- Equipment/vehicle maintenance, repair, and storage.
- Vehicle fueling.
- Outdoor stockpiling of materials.
- Storage of materials in above-ground storage tanks.
- Transport of materials by a conveyor or front-end loader.

Petroleum-based products that have high concentrations of PAHs, including asphalt and coal-tar pitch, are used as raw materials to produce paving and roofing materials (ATSDR, 2002). Coal-tar sealcoat, which may be produced at some Sector D facilities, typically contains 20 to 35% coal-tar pitch which is made up of 50% or more PAHs by weight (Mahler et al., 2005). Based on the potential for spills and leaks of petroleum products used for the manufacturing of asphalt paving materials, roofing materials, and lubricants, and the potential for petroleum hydrocarbon exposure to precipitation from the outdoor stockpiling of raw materials and/or finished products, the 2021 MSGP requires indicator monitoring for PAHs for Sector D facilities.

Sector F: Primary Metals

The industrial stormwater fact sheet identifies the following industrial activities with potential for petroleum hydrocarbon exposure to precipitation that could result in the discharge of PAHs in stormwater for Sector F:

- Materials loading and unloading, storage, handling, and waste management and disposal.
- Equipment/vehicle maintenance, repair, and storage.
- Vehicle fueling.
- Casting and finishing products.
- Furnace operations and pollution control equipment.

Coal-tar, coal-tar pitch, and coal-tar pitch volatiles are used or produced in several industries, including aluminum smelting and coking (ATSDR, 2002). Aluminum smelters have been identified as potential sources of PAHs in stormwater (Pietari, 2016). Other sources have linked PAH pollution in surface waters and soils to aluminum smelters (Martineau, 2012; Borgulat, 2018; Rengarajan, 2015). Coke production at iron and steel facilities has also been identified as a source of PAHs (Eisler 1987, Aries 2007). Stormwater discharges exposed to these operations/sites could, therefore, contain PAHs.

Additionally, EPA's industry analysis indicated that Subsector F1 (Steel Works, Blast Furnaces, and Rolling and Finishing Mills) has an estimated total PAH pollutant load in industrial wastewater of 628 kg/year, and Subsector F5 (Primary Smelting and Refining of Nonferrous Metals; Secondary Smelting and Refining of Nonferrous Metals; and Miscellaneous Primary Metal Products) has an estimated total PAH pollutant load in industrial wastewater of 3.7 kg/year. Subsector F1 (Steel Works, Blast Furnaces, and Rolling and Finishing Mills) had the third highest total estimated PAH pollutant loading in industrial wastewater of the MSGP subsectors evaluated.

Based on the potential for spills and leaks of petroleum products used at primary metals facilities, and sources identifying aluminum smelters and iron and steel facilities as potential sources of PAHs in surface waters, the 2021 MSGP requires indicator monitoring for PAHs for Sector F facilities.

Sector H: Coal Mines and Coal Mining-Related Facilities

The industrial stormwater fact sheet series identifies the following industrial activities with potential for petroleum hydrocarbon exposure to precipitation that could result in the discharge of PAHs in stormwater for Sector H:

- Equipment/vehicle maintenance, repair, and storage.
- Road and rail construction and maintenance.

Coal is a source of petrogenic PAHs. Coal pile discharge has been shown to result in PAH accumulation in receiving water sediments (Curran, 2000), and tailings from underground coal mining have been identified as a source of PAH contamination in urban soils (Hindersmann, 2018).

Sector H facilities commonly construct and maintain haul and access roads that could be sealed with coal-tar sealcoat. Coal-tar sealcoat, like other pavement, is exposed to the elements and undergoes weathering and abrasion that can cause dust and particles containing PAHs to break off. Dust and particles containing PAHs can then be picked up by stormwater discharges and transported to stormwater control measures or directly to receiving waters where it can accumulate in sediments and soils (DeMott, 2010; Rowe, 2011; State of Washington Department of Ecology, 2011; Van Metre, 2009; Van Metre, 2010; Van Metre, 2014). Several studies have linked aquatic life impacts to PAHs in stormwater from surfaces treated with coal-tar and asphalt sealants (Bommarito, 2010; Bryer, 2006; Driscoll, 2019; Kienzler, 2015; Mahler, 2012; USGS, 2019). Thus, roads constructed at Sector H facilities may result in stormwater discharges containing PAHs.

Coal-tar creosote is a commonly used wood preservative derived from coal-tar and is known to contain high levels of PAHs (ATSDR, 2002). Several studies have shown that creosote-treated railroad ties and storage of creosote-treated wood have the potential to contribute to PAHs to soils and stormwater discharges (Van Zuydam, 2009; Ragan, 2011; Pietari, 2016; Konkler, 2020; Valle, 2007; Hussain, 2018; Brooks, 2004; Meador, 1995; Marcotte, 2014; Niera, 2016). Coal mines and related facilities commonly use railways to transport coal and other resources. Creosote-treated railroad ties used at Sector H facilities and exposed to precipitation may result in stormwater discharges containing PAHs.

Based on the potential for petroleum hydrocarbon exposure to precipitation and potential stormwater discharges of PAHs associated with coal piles and tailings at coal mines, as well as road and rail construction and maintenance, the 2021 MSGP requires indicator monitoring for PAHs for Sector H facilities.

Sector I: Oil and Gas Extraction

The industrial stormwater fact sheet series identifies the following industrial activities with potential for petroleum hydrocarbon exposure to precipitation that could result in the discharge of PAHs in stormwater for Sector I:

- Equipment/vehicle maintenance, repair, and storage.
- Vehicle fueling.
- Construction of access roads, drill pads, mud/reserve pits, storage tanks, pipelines, etc.
- Well drilling.
- Well completion or stimulation.
- Production.
- Site closures.

Sector I facilities include oil and gas exploration, production, processing or treatment operations, or transmission facilities. Spills or leaks of crude oil and petroleum products are documented sources of PAH contamination in surface waters (Mahler, 2001; Zychowski, 2016; Troisi, 2016; Meador, 1995; Collier 2013, Albers 2003, Hussain 2018). Petroleum exploration, extraction, transport, and refining have been associated with PAH contamination of surface waters (Collier, 2013; Reynolds, n.d.; Troisi, 2016). Sector I facilities may contribute PAHs in stormwater discharges from drilling mud and fluid, oil spills, leaks, and hydrostatic testing of natural gas pipelines (Sarma, 2016; Eisler, 1987).

Sector I facilities commonly construct access roads that could be sealed with coal-tar sealcoat. Coal-tar sealcoat, like other pavement, is exposed to the elements and undergoes weathering and abrasion that can cause dust and particles containing PAHs to break off. Dust and particles containing PAHs can then be picked up by stormwater discharges and transported to stormwater control measures or directly to receiving waters where it can accumulate in sediments and soils (DeMott, 2010; Rowe, 2011; State of Washington Department of Ecology, 2011; Van Metre, 2009; Van Metre, 2010; Van Metre, 2014). Several studies have linked aquatic life impacts to PAHs in stormwater from surfaces treated with coal-tar and asphalt sealants (Bommarito, 2010; Bryer, 2006; Driscoll, 2019; Kienzler, 2015; Mahler, 2012; USGS, 2019). Thus, PAHs from construction of access roads at Sector I facilities may result in stormwater contamination.

The NRC Study noted for Sector I that “[s]pills and leaks can also lead to petroleum hydrocarbon contaminants in stormwater, including PAHs, which have been shown to be highly toxic to aquatic life. Chemical-specific monitoring is appropriate for this sector to ensure that stormwater is appropriately managed.”

Based on the potential for spills and leaks of petroleum products and documented sources of PAHs in surface waters at oil and gas extraction facilities, the 2021 MSGP requires indicator monitoring for PAHs for Sector I facilities.

Sector M: Automobile Salvage Yards

The industrial stormwater fact sheet series identifies the following industrial activities with potential for petroleum hydrocarbon exposure to precipitation that could result in the discharge of PAHs in stormwater for Sector M:

- Equipment/vehicle maintenance, repair, and storage.
- Storage of materials in above ground tanks.
- Outdoor vehicle and equipment storage.
- Unused parts storage.
- Vehicle dismantling.

End of life vehicles have been identified as a source of pollutants, including PAHs, and improper handling of end of life vehicle fluids, such as engine oil and transmission fluid, and components during the dismantling process has the potential to result in stormwater discharges containing PAHs from Sector M facilities (Arbitman, 2003). Stormwater discharges containing PAHs may occur as a result of vehicle and equipment dismantling and storage, as well as spills, leaks, or improper discarding of gasoline and oil (Prabhukamar, 2010; Valle, 2007; Srogi, 2007; Humboldt Baykeeper, n.d.). Based on the potential for petroleum hydrocarbon exposure to precipitation and potential stormwater discharges of PAHs at automobile salvage yards, the 2021 MSGP requires indicator monitoring for PAHs for Sector M facilities.

Sector O: Steam Electric Generating Facilities

The industrial stormwater fact sheet series identifies the following industrial activities with potential for petroleum hydrocarbon exposure to precipitation that could result in the discharge of PAHs in stormwater for Sector O:

- Equipment/vehicle maintenance, repair, and storage.
- Vehicle fueling.
- Storage of materials in above ground tanks.
- Scrap yards and refuse sites.

Sector O facilities store coal onsite. Coal is a source of petrogenic PAHs, and stormwater discharges from coal piles have been shown to result in PAH accumulation in receiving water sediments (Curran, 2000). EPA’s industrial stormwater fact sheet series for Sector O notes that the primary and largest potential source of stormwater pollutants from fossilfueled steam electric generating facilities is ash refuse piles. PAHs can form from the coal-combustion process and can be present in flue gas and ash generated from coal combustion (both fly ash and bottom ash) (Tarafdar, 2019). Electric power generation has been identified as a significant anthropogenic source of PAHs (Albers, 2003; Eisler, 1987; Rengarajan, 2015). Based on the potential for petroleum hydrocarbon exposure to precipitation and potential stormwater discharges of PAHs from coal piles and ash refuse sites, the 2021 MSGP requires indicator monitoring for PAHs for Sector O facilities.

Sector P: Land Transportation and Warehousing

The industrial stormwater fact sheet series identifies the following industrial activities with potential for petroleum hydrocarbon exposure to precipitation that could result in the discharge of PAHs in stormwater for Sector P:

- Equipment/vehicle maintenance, repair, and storage.
- Vehicle fueling.
- Storage of materials in above ground tanks.
- Petroleum loading/unloading.

Sector P includes railroad transportation facilities (SIC Codes 4011 and 4013). Coal-tar creosote is a commonly used wood preservative derived from coal-tar and is known to contain high levels of PAHs (ATSDR, 2002). Several studies have shown that creosote-treated railroad ties and storage of creosote-treated wood has the potential to contribute to PAHs in soils and stormwater discharges (Van Zuydam, 2009; Ragan, 2011; Pietari, 2016; Konkler, 2020; Valle, 2007; Hussain, 2018; Brooks, 2004; Meador, 1995; Marcotte, 2014; Niera, 2016). Precipitation running over creosote-treated railroad ties used at railroad transportation facilities may result in stormwater discharges containing PAHs.

Sector P also includes petroleum bulk stations and terminals (SIC Code 5171). Spills or leaks of petroleum products have been documented as sources of PAH contamination in surface waters. Petroleum exploration, extraction, transport, and refining have been associated with PAH contamination of surface waters (Collier, 2013; Reynolds, n.d.; Troisi, 2016). Petroleum bulk stations and terminals may contribute to stormwater discharges containing PAHs from oil spills and leaks, which may occur during transportation (Sarma, 2016; Eisler, 1987).

The NRC study noted for Sector P that “petroleum hydrocarbon leaks and spills could lead to harmful stormwater discharges of PAHs. The activities in Sector P and risk of stormwater pollution suggest that chemical-specific monitoring within the MSGP would be appropriate.”

Based on the potential for petroleum hydrocarbon exposure to precipitation and potential stormwater discharges of PAHs from creosote-treated railroad ties used at railroad transportation facilities and the potential for leaks and spills at petroleum bulk stations and terminals, the 2021 MSGP requires indicator monitoring for PAHs for Sector P facilities with SIC Codes 4011, 4013, and 5171.

Sector Q: Water Transportation

The industrial stormwater fact sheet series identifies the following industrial activities with potential for petroleum hydrocarbon exposure to precipitation that could result in the discharge of PAHs in stormwater for Sector Q:

- Materials loading and unloading, storage, handling, and waste management and disposal.
- Equipment/vehicle maintenance, repair, and storage.
- Storage of materials in above ground tanks.

Sector Q includes marinas (SIC Code 4491). Studies have linked PAH contamination in surface waters to marinas from activities associated with boating (e.g., boat cleaning, fueling operations), boat motor exhaust, and occasional spills (Neira, 2016; Heng, 2013). EPA's industry analysis indicated that Sector Q has an estimated total PAH pollutant load in industrial wastewater of 6,351 kg/year, which represents the second highest estimated PAH pollutant loading in industrial wastewater of the MSGP subsectors evaluated. Marinas (SIC Code 4491) account for most of the estimated loading identified in this subsector (6,379 kg/year). Based on the potential for petroleum hydrocarbon exposure to precipitation and potential stormwater discharges of PAHs at marinas, the 2021 MSGP requires indicator monitoring for PAHs for Sector Q facilities with SIC Code 4491.

Sector R: Ship and Boat Building and Repairing Yards

The industrial stormwater fact sheet series identifies the following industrial activity with potential for petroleum hydrocarbon exposure to precipitation that could result in the discharge of PAHs in stormwater for Sector R:

- Equipment/vehicle maintenance, repair, and storage.

Facilities in Sector R perform activities like fluid changes, mechanical repairs, engine maintenance and repair, parts cleaning, refinishing, paint removal, painting, fueling, metal working, welding, cutting, and grinding. These sorts of activities can include using solvents, oils, fuel, antifreeze, acid and alkaline wastes, abrasives, and paints and can create dust. Studies indicate that ship and boat building and repairing yards have the potential to contribute to PAH contamination of soil, groundwater, and marine sediments from maintenance activities, including scraping/sanding of hulls, use of anti-fouling paints, accidental fuel and oil spills, refueling operations, and repair of boat engines and boat maintenance (State of Washington Department of Ecology, n.d.; Eklund, 2014; Niera, 2016). Based on the potential for petroleum hydrocarbon exposure to precipitation and potential stormwater discharges of PAHs at ship and boat building and repairing yards, the 2021 MSGP requires indicator monitoring for PAHs for Sector R facilities.

Sector S: Air Transportation Facilities

The industrial stormwater fact sheet series identifies the following industrial activities with potential for petroleum hydrocarbon exposure to precipitation that could result in the discharge of PAHs in stormwater for Sector S:

- Materials loading and unloading, storage, handling, and waste management and disposal.
- Equipment/vehicle maintenance, repair, and storage.
- Vehicle fueling.
- Runway maintenance.

Studies indicate that Sector S facilities have the potential to contribute to PAHs to stormwater from combustion of liquid fuels, deicing/anti-icing agents, spills (during refueling, fuel transportation, airplane repairs, and fuel storage), airplane tire wear, runways paved with bitumen or coal-tar sealcoat, and vehicle cleaning and maintenance (Sulej, 2011; Sulej, 2012; Sulej-Suchomska, 2016).

Sector S facilities commonly maintain runways that could be sealed with coal-tar sealcoat. Coal-tar sealcoat, like other pavement, is exposed to the elements and undergoes weathering and abrasion that can cause dust and particles containing PAHs to break off. Dust and particles containing PAHs can then be picked up by stormwater discharges and transported to stormwater control measures or directly to receiving waters where it can accumulate in sediments and soils (DeMott, 2010; Rowe, 2011; State of Washington Department of Ecology, 2011; Van Metre, 2009; Van Metre, 2010; Van Metre, 2014). Several studies have linked aquatic life impacts to PAHs in stormwater from surfaces treated with coal-tar and asphalt sealants (Bommarito, 2010; Bryer, 2006; Driscoll, 2019; Kienzler, 2015; Mahler, 2012; USGS, 2019). Thus, PAHs from runways sealed with coal-tar sealcoat at Sector S facilities may result in discharges of PAHs in stormwater.

Based on the potential for petroleum hydrocarbon exposure to precipitation and potential stormwater discharges of PAHs at air transportation facilities, the 2021 MSGP requires indicator monitoring for PAHs for Sector S facilities.

Indicator Monitoring Schedule

Indicator monitoring for PAHs for applicable operators is required bi-annually (i.e., sample twice per year) in the first and fourth years of the permit term as “report-only.” For the 2021 MSGP, EPA is limiting PAH indicator monitoring to bi-annually in these two years of permit coverage, rather than quarterly, given laboratory analysis cost considerations. Indicator monitoring does not have a threshold or baseline value for comparison, therefore no follow-up action is triggered or required based on the sampling results in this part. The requirement in Part 2.2.1 to meet applicable water quality standards still applies. Operators may find it useful to evaluate and compare indicator monitoring data over time to identify any fluctuating values and why they may be occurring, and further inform any revisions to the SWPPP/SCMs if necessary. EPA encourages operators to proactively use their sampling results to understand where the SCMs are working if values are low and improve their stormwater management program if values are high, relative to previous samples collected at the same discharge point. Based on indicator monitoring data collected and analyzed under the 2021 MSGP, EPA may evaluate whether sector/subsector-specific benchmarks are warranted in a future proposed permit.

Samples for PAH indicator monitoring must be analyzed using EPA Method 625.1, or EPA Method 610/Standard Method 6440B if preferred by the operator, consistent with 40 CFR Part 136 analytical methods. These methods are specified for this part so that samples are analyzed consistently across operators. Of the PAH methods, high-performance liquid chromatography (HPLC) with UV/fluorescence detectors in series and gas chromatography/mass spectrometry (GC/MS) are documented to be the best techniques (Adeniji et al., 2018). EPA Method 625.1 is a CG/MS method and “is the most frequently used because of the advantages of identification using both retention time and mass spectrum, providing added information on the chemical structures of the analyte compounds” (Adeniji et al., 2018). In addition, all of the laboratories surveyed during EPA’s cost research reported using EPA Method 625.1 for analysis of the 16 individual priority pollutant PAHs, indicating that this method is currently widely used. EPA Method 610/Standard Method 6440B is an HPLC method and is known to be more sensitive, specific, and reproducible than some GC-based methods (Adeniji et al., 2018). For this reason, EPA supports operators who prefer to use the more sensitive HPLC method.

EPA emphasizes that indicator monitoring for PAHs is report-only and is neither benchmark monitoring nor numeric effluent limitations. However, failure to conduct and report indicator monitoring is a permit violation. This part does not replace or modify any requirement for operators that must monitor for PAHs under any other type of required monitoring, including annual monitoring for impaired waters.

References:

Adeniji, A. O., Okoh, O. O., & Okoh, A. I. (2017). Analytical Methods for Polycyclic Aromatic Hydrocarbons and their Global Trend of Distribution in Water and Sediment: A Review. Chapter 19 of Recent Insights in Petroleum Science and Engineering, Edited by Mansoor Zoveidavianpoor, 394-428. Available at: http://dx.doi.org/10.5772/intechopen.71163

Agency for Toxic Substances and Disease Registry (ATSDR). 2011. Toxic Substances Portal - Polycyclic Aromatic Hydrocarbons (PAHs). https://www.atsdr.cdc.gov/substances/toxsubstance.asp?toxid=25

ATSDR. 2002. Public Health Statement: Creosote. https://www.atsdr.cdc.gov/ToxProfiles/tp85-c1-b.pdf

Albers, P., Petroleum and Individual Polycyclic Aromatic Hydrocarbons, Ch. 14 in Handbook of Ecotoxicology (David J. Hoffman et al. eds. 2nd ed. 2003). Available at https://pubs.er.usgs.gov/publication/5210304

Arbitman, N., Gerel, M., (2003) Managing End-of-Life Vehicles to Minimize Environmental Harm White Paper on Sustainable Conservation's Auto Recycling Project. Sustainable Conservation. Available at https://suscon.org/pdfs/autorecycling/pdfs/autorecycling_whitepaper_elvs.pdf

Aries, E., D.R. Anderson, and R. Fisher. 2007. Exposure assessment of workers to airborne PCDD/Fs, PCBs and PAHs at an electric arc furnace steelmaking plant in the UK. The Annals of Occupational Hygiene 52(4):213-225. Available at https://doi.org/10.1093/annhyg/men011

Bayat, J., Hashemi, S. H., Khoshbakht, K., Deihimfard, R., Shahbazi, A., & Momeni-Vesalian, R. (2015). Monitoring of polycyclic aromatic hydrocarbons on agricultural lands surrounding Tehran oil refinery. Environmental monitoring and assessment, 187(7), 451. Available at https://www.researchgate.net/publication/278787440_Monitoring_of_polycyclic_aromatic_hydrocarbons_on_agricultural_lands_surrounding_Tehran_oil_refinery

Bommarito, T., Sparling, D.W., Halbrook, R.S. 2010. Toxicity of coal-tar and asphalt sealants in eastern newts, Natophthalmus viridescens. Chemosphere 81, 187-193.

Borgulat, J., & Staszewski, T. (2018). Fate of PAHs in the vicinity of aluminum smelter. Environmental science and pollution research international, 25(26), 26103–26113. Available at https://www.ncbi.nlm.nih.gov/pmc/articles/PMC6132408/

Brooks, K.M. 2004. Polycyclic aromatic hydrocarbon migration from creosote-treated railway ties into ballast and adjacent wetlands (FPL−RP−617). Madison, WI:USDA Research Paper FPL-RP-617. Available at https://www.fs.usda.gov/treesearch/pubs/7043

Bryer, P., Elliott, J.N., Willingham, E. 2006. The effects of coal tar based pavement sealer on amphibian development and metamorphosis. Ecotoxicology 15, 241-247.

Collier, T. K. et al., Effects on fish of polycyclic aromatic hydrocarbons (PAHs) and naphthenic acid exposures, 33 Organic Chemical Toxicology of Fishes 195 (2013). Available at https://www.sciencedirect.com/science/article/pii/B9780123982544000042

CDC. 2009. Polycyclic Aromatic Hydrocarbons (PAHs). http://www.epa.gov/sites/production/files/2014-03/documents/ pahs_factsheet_cdc_2013.pdf.

Curran, Irvine, Droppo, Murphy. (2000). Suspended Solids, Trace Metal, and PAH Concentrations and Loadings from Coal Pile Runoff to Hamilton Harbour, Ontairo. Available at https://www.sciencedirect.com/science/article/abs/pii/S0380133000706708

DeMott, R.P.; Gauthier, T.D.; Wiersema, J.M.; and Crenson, G. 2010. Polycyclic Aromatic Hydrocarbons (PAHs) in Austin Sediments After a Ban on Pavement Sealers. Environmental Forensics. DOI: 10.1080/15275922.2010.526520.

Driscoll, S. K., Kulacki, K. and Marzooghi, S. 2019. A Review of the Literature on Potential Effects of Runoff from Refined Coal-Tar–Based Sealant Coating on Aquatic Organisms. Integr Environ Assess Manag. doi:10.1002/ieam.4210

Ecology and King County. 2011. Control of Toxic Chemicals in Puget Sound: Assessment of Selected Toxic Chemicals in the Puget Sound Basin, 2007-2011. Ecology Publication No. 11-03-055. https://fortress.wa.gov/ecy/publications/documents/1103055.pdf

Eisler, R., Polycyclic aromatic hydrocarbon hazards to fish, wildlife, and invertebrates: a synoptic review, U.S. Fish & Wildlife Serv. Biological Report 85(1.11) (May 1987). Available at https://www.pwrc.usgs.gov/eisler/CHR_11_PAHs.pdf

Eklund, Britta and Eklund, David. Pleasure Boatyard Soils are Often Highly Contaminated (2014). Available at https://www.ncbi.nlm.nih.gov/pmc/articles/PMC3972443/

EPA. 2009. Brownfields Profile Glossary. http://ofmpub.epa.gov/sor_internet/registry/termreg/searchandretrieve/glossariesandkeywordlists/search.do? details =&glossaryName=Brownfields%20Profile%20Glossary#.

EPA. 2014. EPA's Integrated Risk Information System (IRIS). http://www.epa.gov/IRIS/.

EPA, 2020. Toxic and Priority Pollutants Under the Clean Water Act. https://www.epa.gov/eg/toxic-and-priority-pollutants-under-clean-water-act#:~:text=The%20Toxic%20Pollutant%20List%20was,Act%20by%20Congress%20in%201977.

Heng, Lee Yook; Zakaria, Zuriati; and Surif, Salmijah. Concentrations and Sources of Polycyclic Aromatic Hydrocarbons in the Seawater around Langkawi Island, Malaysia (2013). Available at https://www.hindawi.com/journals/jchem/2013/975781/

Hindersmann, B., & Achten, C. (2018). Urban soils impacted by tailings from coal minings: PAH source identification by 59 PAHs, BPCA, and alkylated PAHs. Environmental Pollution, 242, 1217-1225. Available at https://www.sciencedirect.com/science/article/abs/pii/S0269749118317585

Humboldt Baykeeper. Cleanup of contaminated waterfront G & R Metals property moves forward. Toxics Initiative and Enforcement. Available at https://www.humboldtbaykeeper.org/programs/toxics-initiative/483-cleanup-of-contaminated-waterfront-g-a-r-metals-property-moves-forward (accessed October 3, 2020).

Hussain, K., R.R. Hoque, S. Balachandran, S. Medhi, M. Idris, M. Rahman, and F.L. Hussain. 2018. Monitoring and risk analysis of PAHs in the environment. Handbook of Environmental Materials Management: Springer International Publishing, AG. Available at https://link.springer.com/referenceworkentry/10.1007%2F978-3-319-58538-3_29-

Kienzler, A., Mahler, Barbara J., Van Metre, P.C., Schweigert, N., Devaux, A., and Bony, S. 2015. Exposure to runoff from coal-tar-sealed pavement induces genotoxicity and impairment of DNA repair capacity in the RTL-W1 fish liver cell line. Science of the Total Environment. 520, 73-80. DOI: 10.1016/j.scitotenv.2015.03.005.

Konkler, Matthew & Cappellazzi, Jed & Presley, Gerald & Morrell, Jeffrey. (2020). Migration of creosote components from timbers treated with creosote and processed using Best Management Practices. Journal of Environmental Management. 276. 1-7. 10.1016/j.jenvman.2020.111270. Available at https://www.sciencedirect.com/science/article/pii/S0301479720311944

Mahler, B.J. & Van Meter, P.C. (2001) Effects of Oil and Gas Production on Lake Meredith Sediments, 1964-99. U.S. Geological Survey Fact Sheet 072-01. Available at https://pubs.usgs.gov/fs/fs07201/pdf/FS_072-01.pdf

Mahler, B.J.; Van Metre, P.C.; Bashara, T.J.; Wilson, J.T.; Johns, D.A. 2005. Parking lot sealcoat: An unrecognized source of urban PAHs. Environ. Sci. Technol. DOI:10.1021/ es0501565.

Mahler, B.J.; Van Metre, P.C.; Crane, J.L.; Watts, A.W.; Scoggins, M.; Williams, E.S. 2012. Coal-tar-based pavement sealcoat and PAHs: Implications for the environment, human health, and stormwater management. Environ. Sci. Technol. DOI:10.1021/es203699x.

Marcotte, et al. Evaluation of the PAH and water-extractable phenols content in used cross ties from the French rail network (2014). Available at https://www.sciencedirect.com/science/article/abs/pii/S0045653514003610?via%3Dihub

Martineau, Daniel, Contaminants and Health of Beluga Whales of the Saint Lawrence Estuary, in Ch. 17 Ecosystem Health and Sustainable Agriculture 2 (Norrgren, L. & J. Levengood eds. 2012). Available at http://www2.balticuniv.uu.se/bup-3/textbooks-course-materials/bup-course-materials/ecosystem-health-sustainable-agriculture/2-ecology-and-animal-health/167-ecology-and-animal-health-17/file

Meador, J.P. et al. Bioaccumulation of Polycyclic Aromatic Hydrocarbons by Marine Organisms, 143 Review of Envtl. Contamination & Toxicology 79 (1995). Available at https://link.springer.com/chapter/10.1007/978-1-4612-2542-3_4

Nascimento, R. A., de Almeida, M., Escobar, N. C., Ferreira, S. L., Mortatti, J., & Queiroz, A. F. (2017). Sources and distribution of polycyclic aromatic hydrocarbons (PAHs) and organic matter in surface sediments of an estuary under petroleum activity influence, Todos os Santos Bay, Brazil. Marine pollution bulletin, 119(2), 223-230. Available at https://www.researchgate.net/publication/316503633_Sources_and_distribution_of_polycyclic_aromatic_hydrocarbons_PAHs_and_organic_matter_in_surface_sediments_of_an_estuary_under_petroleum_activity_influence_Todos_os_Santos_Bay_Brazil

National Cancer Institute. 2018. Coal Tar and Coal-Tar Pitch. https://www.cancer.gov/about-cancer/causes-prevention/risk/substances/coal-tar.

Niera, Carlos, et al. Occurrence and distribution of polycyclic aromatic hydrocarbons in surface sediments of San Diego Bay marinas (2016). Available at http://levin.ucsd.edu/people/photos/neira/Neira%20etal_2017_MPB_PAHs.pdf

Norris, G.A. and R.C. Henry. 2019. Unmix Optimum analysis of PAH sediment sources. Sci. Total Environ., 673, pp. 831-838.

NRC. 2019. Improving the EPA Multi-Sector General Permit for Industrial Stormwater Discharges. Washington, DC: The National Academies Press. https://doi.org/10.17226/25355, pp. 33.

O'Reilly, K.T. and Edwards, M. 2019. Letter to the Editor: Comment on Norris and Henry (2019), Science of The Total Environment. 135248, ISSN 0048-9697, https://doi.org/10.1016/j.scitotenv.2019.135248.Pietari, O'Reilly, Boehm. (2016). A Review of PAHs. Available at https://www.stormh2o.com/bmps/article/13024928/a-review-of-pahs

Prabhukumar, G. and K. Pagilla. 2010. Polycyclic aromatic hydrocarbons in urban runoff–sources, sinks and treatment: A review. Chicago, IL: Illinois Institute of Technology Department of Civil, Architectural and Environmental Engineering. Available at http://drscw.org/wp/wp-content/uploads/2019/01/Review-of-PAH-Sources-and-Treatment_FINAL_13-Oct2010.pdf

Ragan, Anita (2011) Groundwater and Stormwater Treatment at Western Wood Preserving Facilities: An Analysis of Current Treatment Methods. Available at https://ir.library.oregonstate.edu/concern/parent/f4752k328/file_sets/mw22v8189

Rengarajan, T. et al. Exposure to polycyclic aromatic hydrocarbons with special focus on cancer, 5 Asian Pacific J. Tropical Biomedicine 182 (2015). Available at https://www.sciencedirect.com/science/article/pii/S2221169115300034

Reynolds, J. & D. Wetzel, PowerPoint presentation: Polycyclic Aromatic Hydrocarbon (PAH) Contamination in Cook Inlet Belugas (n.d.). Available at http://downloads.regulations.gov%2FMARAD-2019-0011-0143%2Fattachment_13.pdf&usg=AOvVaw0oQqKRlWvub4vgOOdK6ogX

Rowe, A. and O'Connor, T. 2011. Assessment of Water Quality of Runoff from Sealed Asphalt Surfaces. http://nepis.epa.gov/Exe/ZyPDF.cgi?Dockey=P100ECC8.txt

Sarma, H., N.F. Islama, P. Borgohaina, A. Sarma, and M.N.V. Prasad. 2016. Localization of polycyclic aromatic hydrocarbons and heavy metals in surface soil of Asia's oldest oil and gas drilling site in Assam, north-east India: Implications for the bio-economy. Emerging Contaminants 2(3):119-127. Available at https://www.sciencedirect.com/science/article/pii/S2405665015300172

Scoggins, M.; McClintock, N.L.; Gosselink, L.; Bryer, P. 2007. Occurrence of polycyclic aromatic hydrocarbons below coal-tar-sealed parking lots and effects on stream benthic macroinvertebrate communities. Journal of the North American Benthological Society. DOI:10.1899/06-109.1.

Srogi, K. 2007. Monitoring of environmental exposure to polycyclic aromatic hydrocarbons: a review. Environmental Chemistry Letters 5:169-195. Available at https://link.springer.com/article/10.1007/s10311-007-0095-0

State of Washington Department of Ecology (n.d.). Everett Shipyard Inc: A Puget Sound Initiative site – Reaching the goal of a healthy, sustainable Puget Sound. Available at https://apps.ecology.wa.gov/gsp/Sitepage.aspx?csid=3655

State of Washington Department of Ecology and King County. 2011. Control of Toxic Chemicals in Puget Sound: Assessment of Selected Toxic Chemicals in the Puget Sound Basin, 2007-2011. Ecology Publication No. 11-03-055. https://fortress.wa.gov/ecy/publications/documents/1103055.pdf

Stein, E. D., Tiefenthaler, L. L., & Schiff, K. (2006). Watershed-based sources of polycyclic aromatic hydrocarbons in urban storm water. Environmental Toxicology and Chemistry: An International Journal, 25(2), 373-385. Available at https://setac.onlinelibrary.wiley.com/doi/abs/10.1897/05-285R.1

Sulej, A., Polkowska, Z., and J. Namieśnik. 2011. Contamination of runoff water at Gdańsk Airport (Poland) by polycyclic aromatic hydrocarbons (PAHs) and polychlorinated biphenyls (PCBs). *Sensors (Basel)* 11(12):11901-11920. Available at https://www.ncbi.nlm.nih.gov/pmc/articles/PMC3252016/

Sulej, Anna; Polkowska, Zaneta; Namiesnik, Jacek. Contaminants in airport runoff water in the vinicities of two international airports in poland (2012). Available at http://www.pjoes.com/Contaminants-in-Airport-Runoff-Water-r-nin-the-Vicinities-of-Two-International-r,88803,0,2.html

Sulej-Suchomska, A.M., Ż. Polkowska, A. Przyjazny, Z.J. Kokot, and J. Namieśnik. 2016. Determination of fuel combustion product in airport runoff water samples using liquid–liquid extraction with gas chromatography–spectrometry. *International Journal of Environmental Science and Technology* 13:1475-1488. Available at https://link.springer.com/article/10.1007/s13762-016-0988-1

Tarafdar, Abhrajyoti and Alok Sinha. Polycyclic Aromatic Hydrocarbons (PAHs) Pollution Generated from Coal-Fired Thermal Power Plants: Formation Mechanisms, Characterization, and Profiling (2019). Available at https://www.researchgate.net/publication/328700070_Polycyclic_Aromatic_Hydrocarbons_PAHs_Pollution_Generated_from_Coal-Fired_Thermal_Power_Plants_Formation_Mechanism_Characterization_and_Profiling_Characterization_and_Control

Troisi, G. et al. Impacts of oil spills on seabirds: unsustainable impacts of non-renewable energy, 41 Int'l J. Hydrogen Energy 16,549 (2016). Available at https://eprints.kingston.ac.uk/id/eprint/34995/1/1-s2.0-S0360319915317006-main.pdf

USGS. 2019. Coal-Tar-Based Pavement Sealant, PAHs, and Environmental Health. https://www.usgs.gov/mission-areas/water-resources/science/coal-tar-based-pavement-sealcoat-pahs-and-environmental-health?qt-science_center_objects=0#qt-science_center_objects.

U.S. Department of Health and Human Services. 2014. 2014 Report on Carcinogens,14th Edition. Accessed 11/20/19, https://ntp.niehs.nih.gov/ntp/roc/content/profiles/coaltars.pdf

Valle, S., Panero, M. A., and Shor, L. 2007. Pollution Prevention and Management Strategies for Polycyclic Aromatic Hydrocarbons in the New York/New Jersey Harbor. https://www.researchgate.net/publication/228786031_Pollution_Prevention_and_Management_Strategies_for_Polycyclic_Aromatic_Hydrocarbons_in_the_New_YorkNew_Jersey_Harbor

Van Metre, P.C.; Mahler, B.J.; Wilson, J.T. 2009. PAHs Underfoot: Contaminated Dust from Coal-Tar Sealcoated Pavement is Widespread in the United States. Environ. Sci. Technol. DOI:10.1021/ es802119h.

Van Metre, P. and Mahler, B. 2010. Contribution of PAHs from coal-tar pavement sealant and other sources to 40 U.S. lakes. Sci. Total Environ., 409, pp. 334-344.

Van Metre, P. and Mahler, B. 2014. PAH concentrations in lake sediment decline following ban on coal-tar-based pavement sealants in Austin, Texas. Environ. Sci Technol., 48, pp. 7222-7228.

Van Zuydam, Constance Sthembile (2009) Determination of Polycyclic Aromatic Hydrocarbons (PAHS) resulting from wood storage and wood treatment facilities for electricity transmission in Swaziland. Available at https://core.ac.uk/download/pdf/43164049.pdf

Weinstein, John E., Kevin D. Crawford, Thomas R. Garner, and Alan J. Flemming. 2010. Screening-level ecological and human health risk assessment of polycyclic aromatic hydrocarbons in stormwater detention pond sediments of Coastal South Carolina, USA. Journal of Hazardous Materials 178. 906-916.

Zou, Y., Wang, L., Christensen. E.R. 2015. Problems in the fingerprints based polycyclic aromatic hydrocarbons source apportionment analysis and a practical solution, Environmental Pollution, Volume 205, Pages 394-402, ISSN 0269-7491, https://doi.org/10.1016/j.envpol.2015.05.029.

Zychowski, G. V. et al. Reptilian exposure to polycyclic aromatic hydrocarbons and associated effects, 36 Envtl. Toxicology & Chemistry 25 (2017). Available at https://pubmed.ncbi.nlm.nih.gov/27557365/

Part 4.2.1.2 Exception for Facilities in Climates with Irregular Stormwater Discharges

This Part allows for an exception from indicator monitoring for facilities in climates with irregular stormwater discharges as described in Part 4.1.6 (e.g., areas where limited rainfall occurs during parts of the year (e.g., arid or semi-arid climates) or in areas where freezing conditions exist that prevent discharges from occurring for extended periods). This exception provides flexibility to those operators in these climates. Such operators may modify the applicable indicator monitoring schedule provided the operator reports the revised schedule directly to EPA by the due date of the first applicable sample (see EPA Regional contacts in Part 7.8), and the operator keeps this revised schedule with the facility's SWPPP as specified in Part 6.5. As noted in Part 4.1.7, the operator must indicate in Net-DMR any 3-month interval that it did not take a sample.

Part 4.2.1.3 Exception for Inactive and Unstaffed Facilities

This Part allows for an exception from indicator monitoring for facilities that are both inactive and unstaffed, when such facilities no longer have industrial activities or materials exposed to stormwater. EPA is allowing this exception because these facilities will not be contributing pollutants in stormwater discharges. These facilities could alternatively submit an NEC, terminating permit coverage. However, EPA realizes that some facilities plan to recommence industrial activity in the future and therefore may wish to keep active permit coverage. To qualify for this exception, a facility must maintain a signed certification with their SWPPP documentation (Part 6.5 of the permit) that indicates that the site is inactive and unstaffed, and that there are no industrial activities or materials exposed to stormwater. Operators are not required to obtain advance approval for this exception. The 2021 MSGP includes an allowance for inactive and unstaffed sites in the mining industry (i.e., Sectors G, H, and J) to qualify for this exception where some industrial activities or materials are still exposed to stormwater. This provision is included for mining sites because of the large number of extremely remote sites in these sectors, and the impracticability/infeasibility of reaching these sites during qualifying storm events.

The permit clarifies that if circumstances change and industrial materials or activities become exposed to stormwater or facilities become active and/or staffed, this exception no longer applies and operators must immediately begin complying with the applicable indicator monitoring requirements under Part 4.2.1 as if they were in the first year of permit coverage, and notify EPA of the change in the NOI by submitting a "Change NOI" form. In the same way, if an operator does not qualify for this exception at the time it is authorized to discharge, but during the permit term the facility becomes inactive and unstaffed, and there are no industrial materials or activities that are exposed to stormwater, then the operator must notify EPA of this change in the "Change NOI" form. The operator may discontinue indicator monitoring once they have done so and have prepared and signed the statement described above concerning their qualification for this special exception.

Part 4.2.2 Benchmark Monitoring

This permit requires benchmark monitoring as a gauge of the performance of facilities' SCMs and to further ensure compliance with water quality standards. Since the MSGP's first issuance in 1995, benchmark monitoring has been employed as a means by which to measure the concentration of a pollutant in a facility's industrial stormwater discharges. See 60 FR 50804 (Sept. 29, 1995). Analytical results from benchmark monitoring are quantitative and therefore can be used to compare results from discharge to discharge and to quantify any improvement in stormwater quality attributable to the stormwater control measures, or to identify a pollutant that is not being adequately controlled. The benchmark thresholds are the pollutant concentrations above which represent a level of concern. The level of concern is a concentration at which a stormwater discharge could potentially impair or contribute to impairing water quality or affect human health from ingestion of water or fish. The benchmarks are also set at a level, that if below, a facility's discharges pose less potential for a water quality concern. As such, the benchmarks provide an appropriate level to determine whether a facility's SCMs are successfully implemented. See 60 FR 50804 for a discussion on the origin of the MSGP's benchmarks.

The 2019 NRC Study on industrial stormwater noted that some stakeholders have described benchmark monitoring as overly burdensome to industries and producing data that go unutilized (p. 18). On the other hand, other stakeholders have expressed concern that if stormwater problems are observed through benchmark monitoring, the mechanisms to ensure issues are effectively addressed are lacking. Public comments received on the proposed permit also express both of these views. Some stakeholders have also suggested that EPA completely discontinue benchmark monitoring and that operators and EPA should rely on annual reporting and quarterly visual assessments as the main mechanisms to assess stormwater control effectiveness at industrial facilities. Benchmark monitoring, Annual Reports, and visual assessments are all complementary, but ultimately serve different purposes for the operator, and for EPA.

Annual reporting only occurs once per year during the permit term, and thus limits the number of opportunities and delays the time the operator must assess and react to potential problems at their facility. Additionally, while Annual Reports contain valuable information on facility inspections, visual assessments, corrective actions, and Additional Implementation Measures, the data are largely qualitative. Visual assessments are also an important component of a facility's stormwater program, which requires the operator to observe water quality characteristics, such as color, clarity, solids, and oil sheen and can indicate issues from pollutants that are not required to be monitored for. Although quarterly visual assessments and quarterly benchmark monitoring occur at the same frequency, visual assessments result in narrative descriptions of stormwater pollution and may not provide the precision necessary for the operator to address a specific pollutant problem.

Compiling and evaluating information from either Annual Reports or visual assessments in a systemic, meaningful way is more challenging than analyzing quantitative benchmark data. Annual Reports tell an overall story of what happened with stormwater discharges at the facility for a given year, and visual assessments give a general, observed indication of discharge quality for a given quarter. Benchmark monitoring data, however, provide numerical indicators of stormwater control measure effectiveness, what pollutants are being discharged, and at what magnitude, which can be addressed in real-time and compared over time.

EPA has always tried to balance the burden to the regulated community with its obligation under the CWA to ensure industrial stormwater discharges meet all provisions of CWA § 301, including applicable water quality standards (CWA § 402(p)(3)(A)). To date, the Agency has not received adequate information or data suggesting a viable alternative approach to benchmark monitoring for characterizing industrial sites' stormwater discharges, quantifying pollutant concentrations, and assessing stormwater control measure effectiveness.

Part 4.2.2.1 Applicability of Benchmark Monitoring

Benchmark monitoring requirements described in Part 4.2.2 require operators to collect quarterly stormwater samples for laboratory chemical analyses. Samples must be analyzed consistent with 40 CFR Part 136 analytical methods and using test procedures with quantitation limits at or below benchmark thresholds for all benchmark parameters for which you are required to sample, i.e. sufficiently sensitive methods. For averaging purposes, you may use a value of zero for any individual sample parameter which is determined to be less than the method detection limit. For sample values that fall between the method detection level and the quantitation limit (i.e., a confirmed detection but below the level that can be reliably quantified), use a value halfway between zero and the quantitation limit.

For clarity, EPA continues to emphasize that the benchmark thresholds in the EPA 2021 MSGP are not, and have never been, effluent limits themselves. Therefore, an exceedance of the benchmark threshold is not a violation of the permit. At the same time, the permit contains a narrative effluent limitation to protect water quality.

Part 4.2.2.2 Summary of the 2021 MSGP Benchmark Thresholds

The following table presents the 2021 MSGP's freshwater and saltwater benchmark thresholds, and the source of those values. EPA updated the benchmark thresholds to match the units that appear in the source documents as indicated.

2015 and 2021 MSGP Benchmark Values and Sources

Pollutant		2015 MSGP Benchmark	2015 MSGP Source (see footnotes)	2021 MSGP Benchmark	2021 MSGP Source (see footnotes)
Total Recoverable Aluminum (T)		0.75 mg/L	1	1,100 µg/L	18
Total Recoverable Beryllium		0.13 mg/L	2	130 µg/L [a]	2
Total Recoverable Iron		1.0 mg/L	3	Removed	16
Biochemical Oxygen Demand (5-day)		30 mg/L	4	30 mg/L	4
pH		6.0 – 9.0 s.u.	4	6.0 – 9.0 s.u.	4
Chemical Oxygen Demand		120 mg/L	5	120 mg/L	5
Total Phosphorus		2.0 mg/L	6	2.0 mg/L	6
Total Suspended Solids (TSS)		100 mg/L	7	100 mg/L	7
Nitrate and Nitrite Nitrogen		0.68 mg/L	7	0.68 mg/L	7
Total Recoverable Magnesium		0.064 mg/L	8	Removed	16
Turbidity		50 NTU	9	50 NTU	9
Total Recoverable Antimony		0.64 mg/L	12	640 µg/L[a]	1
Ammonia		2.14 mg/L	13	2.14 mg/L	1
Total Recoverable Cadmium	Freshwater[b]	0.0021 mg/L	1	1.8 µg/L [a]	15
	Saltwater	0.04 mg/L	14	33 µg/L [a]	15
Total Recoverable Copper	Freshwater	0.014 mg/L	1	5.19µg/L	18
	Saltwater	0.0048 mg/L	14	4.8 µg/L	14
Total Recoverable Cyanide	Freshwater	0.022 mg/L	1	22 µg/L[a]	1
	Saltwater	0.001 mg/L	14	1 µg/L[a]	14
Total Recoverable Mercury	Freshwater	0.0014 mg/L	1	1.4 µg/L[a]	1
	Saltwater	0.0018 mg/L	14	1.8 µg/L[a]	14
Total Recoverable Nickel	Freshwater[b]	0.47 mg/L	1	470 µg/L[a]	1
	Saltwater	0.074 mg/L	14	74 µg/L[a]	14
Total Recoverable Selenium	Freshwater	0.005 mg/L	3	1.5 µg/L for still/standing (lentic) waters 3.1 µg/L for flowing (lotic) waters	17
	Saltwater	0.29 mg/L	14	290 µg/L[a]	14
Total Recoverable Silver	Freshwater[b]	0.0032 mg/L	1	3.2 µg/L[a]	1
	Saltwater	0.0019 mg/L	14	1.9 µg/L[a]	14
Total Recoverable Zinc	Freshwater[b]	0.12 mg/L	1	120 µg/L[a]	1
	Saltwater	0.09 mg/L	14	90 µg/L[a]	14
Total Recoverable Arsenic	Freshwater[b]	0.15 mg/L	3	150 µg/L[a]	3
	Saltwater	0.069 mg/L	14	69 µg/L[a]	14

Pollutant		2015 MSGP Benchmark	2015 MSGP Source (see footnotes)	2021 MSGP Benchmark	2021 MSGP Source (see footnotes)
Total Recoverable Lead	Freshwater[b]	0.082 mg/L	3	82 µg/L[a]	3
	Saltwater	0.21 mg/L	14	210 µg/L[a]	1

[a] Values have been updated to match original units found in source documents.

[b] These pollutants are dependent on water hardness where discharged into freshwaters. The freshwater benchmark value listed is based on a hardness of 100 mg/L. When a facility analyzes receiving water samples for hardness, the operator must use the hardness ranges provided in Table 1 in Appendix J of the 2015 MSGP and in the appropriate tables in Part 8 of the 2015 MSGP to determine applicable benchmark values for that facility. Benchmark values for discharges of these pollutants into saline waters are not dependent on receiving water hardness and do not need to be adjusted.

Sources:

1. “National Recommended Water Quality Criteria.” Acute Aquatic Life Freshwater (EPA-822-F-04-010 2006-CMC). https://nepis.epa.gov/Exe/ZyNET.exe/P1003R9X.txt?ZyActionD=ZyDocument&Client=EPA&Index=2006%20Thru%202010&Docs=&Query=&Time=&EndTime=&SearchMethod=1&TocRestrict=n&Toc=&TocEntry=&QField=&QFieldYear=&QFieldMonth=&QFieldDay=&UseQField=&IntQFieldOp=0&ExtQFieldOp=0&XmlQuery=&File=D%3A%5CZYFILES%5CINDEX%20DATA%5C06THRU10%5CTXT%5C00000007%5CP1003R9X.txt&User=ANONYMOUS&Password=anonymous&SortMethod=h%7C-&MaximumDocuments=1&FuzzyDegree=0&ImageQuality=r75g8/r75g8/x150y150g16/i425&Display=hpfr&DefSeekPage=x&SearchBack=ZyActionL&Back=ZyActionS&BackDesc=Results%20page&MaximumPages=1&ZyEntry=2#
2. “EPA Recommended Ambient Water Quality Criteria for Beryllium.” LOEL Acute Freshwater (EPA-440-5-80-024 October 1980)
3. “National Recommended Water Quality Criteria.” Chronic Aquatic Life Freshwater (EPA-822-F-04- 010 2006-CCC)
4. Secondary Treatment Regulations (40 CFR 133)
5. Factor of 4 times BOD5 (5-day biochemical oxygen demand) concentration - North Carolina Benchmark
6. North Carolina stormwater Benchmark derived from NC Water Quality Standards
7. National Urban Runoff Program (NURP) median concentration
8. Minimum Level (ML) based upon highest Method Detection Limit (MDL) times a factor of 3.18
9. Combination of simplified variations on Stormwater Effects Handbook, Burton and Pitt, 2001 and water quality standards in Idaho, in conjunction with review of DMR data
10. “National Ambient Water Quality Criteria.” Acute Aquatic Life Freshwater. This is an earlier version of the criteria document that has subsequently been updated. (See source #1)
11. “National Ambient Water Quality Criteria.” Chronic Aquatic Life Freshwater. This is an earlier version of the criteria document that has subsequently been updated. (See source #3)
12. “National Ambient Water Quality Criteria. “Human Health for the Consumption of Organism Only (EPA-822-F-01-0102006)
13. “Guidelines for Deriving Numerical National Water Quality Criteria for the Protection of Aquatic Organisms and Their Uses.” USEPA Office of Water (PB85-227049 January 1985)
14. “National Recommended Water Quality Criteria.” Acute Aquatic Life Saltwater (CMC) available at: http://water.epa.gov/scitech/swguidance/standards/criteria/current/index.cfm#altable
15. “Aquatic Life Ambient Water Quality Criteria: Cadmium, 2016” (EPA 820-R-16-002)
16. Improving the EPA Multi-Sector General Permit for Industrial Stormwater Discharges, 2019. Available at: https://www.nap.edu/catalog/25355/improving-the-epa-multi-sector-general-permit-for-industrial-stormwater-discharges

17. "National Recommended Water Quality Criteria Table." Available at: https://www.epa.gov/wqc/national-recommended-water-quality-criteria-aquatic-life-criteria-table
18. See "Industrial stormwater Technical Memo for aluminum and copper criteria percentiles" in Docket ID# EPA-HQ-OW-2019-0372.

Derivation of the Benchmark Levels

The 2021 MSGP retains many of the same benchmark monitoring thresholds as the 2015 MSGP, with some modifications. EPA revised the aluminum, copper (for discharges to freshwater), selenium (for discharges to freshwater), and cadmium benchmark thresholds based on updated EPA national recommended aquatic life water quality criteria and suspends magnesium and iron based on the NRC study recommendations and lack of documented acute toxicity. The 2021 MSGP also incorporates additional flexibility in Part 5 (Additional Implementation Measures) for those operators who exceed the benchmark threshold for aluminum or copper through the optional derivation and application of a facility-specific threshold.

The process that EPA followed in selecting the benchmark thresholds for the permit is the same as in previous permits. The steps are as follows: Step 1: Use EPA's current CWA section 304(a) national recommended aquatic life ambient water quality acute criterion value, where appropriate; Step 2: If no EPA acute criterion exists, use the national recommended aquatic life ambient water quality chronic criterion; Step 3: If neither acute nor chronic criteria exist, use data from discharge studies or technology-based standards to establish a benchmark. EPA hereinafter refers to the CWA section 304(a) national recommended aquatic life ambient water quality criteria as "criteria" or "criterion" and differentiates acute and chronic criteria where applicable. EPA also evaluated reported 2015 MSGP benchmark monitoring data for aluminum and copper (for discharges to freshwater) to determine if it would be appropriate to allow voluntary calculation and use of a facility-specific threshold using the national recommended criteria equations in place of the standard MSGP benchmark thresholds for aluminum and copper.

In general, the freshwater acute criteria are less restrictive than chronic water quality criteria. Because of the intermittent nature of wet weather (i.e., stormwater) discharges and the increased and variable ambient flows that generally result from precipitation events, EPA views acute criteria as generally more appropriate than chronic criteria in this context. Since benchmarks are usually set equal to recommended ambient water quality criteria for the receiving waters, with no allowance for dilution during storm events, they generally represent conservative values. Exceedance of a benchmark threshold does not necessarily indicate that a discharge is not meeting an applicable water quality standard, but does require the operator to evaluate the effectiveness of its stormwater control measures, with follow-up Additional implementation Measures (AIM) responses where required per Part 5.2. For a full discussion of EPA's approach for the derivation of the benchmarks, see the Fact Sheet for the 1995 MSGP (60 Fed. Reg. 50825), 2000 MSGP (65 Fed. Reg. 64746), and the 2008 MSGP (73 Fed. Reg. 56572).

The MSGP defines saline or saltwaters for the purposes of benchmark monitoring as those waters with salinity equal to or in exceedance of 10 parts per thousand 95 percent or more of the time, unless otherwise defined as a coastal or marine water by the applicable state or tribal surface water quality standards. This definition is consistent with 40 CFR 131.36. These benchmarks represent the available acute ambient water quality criteria for priority toxic and non-priority pollutants in saltwater.

The use of national recommended aquatic life ambient water quality criteria, particularly acute criteria, are appropriate for use as benchmark thresholds in the MSGP for stormwater discharges. Criteria are derived to be protective under ambient conditions however those water conditions occur. The criteria reflect maximum concentrations of a pollutant in ambient water that can occur for specific durations that will still protect the designated aquatic life use, if not exceeded more than once in 3 years on average.

The duration for acute criteria, which are most often selected as sources for the MSGP benchmark thresholds, are typically one hour. In a laboratory setting, acute criteria reflect toxic effects observed in test organisms following acute laboratory exposure tests of 4 days. There are scientific studies indicating shorter-term exposures (e.g., one hour or less, as with stormwater) can cause latent acute effects, thus the one-hour acute exposure duration is intended to reflect this knowledge (Brent and Herricks, 1998; Mebane et al., 2019).

The use of acute water quality criteria for stormwater comports with recommendations in the NRC study, which states: *"Given the episodic nature of stormwater flow and the likelihood of instream dilution and attenuation, aquatic life criteria based on short-term (acute) or intermittent exposures are typically more appropriate for stormwater benchmark threshold levels than criteria based on long-term (chronic) exposures. Where EPA identifies substantial chronic risks to aquatic ecosystems from intermittent exposures during criteria development, such as for contaminants that bioaccumulate, an equation should be provided to translate chronic criteria."*

The duration for chronic criteria is typically 4 days, but occasionally set for longer durations. In a laboratory setting, chronic criteria reflect reproductive, growth, or survival impacts occurring in 20- to 60-day toxicity tests, depending on the test and species. There is evidence that for some chemicals and species chronic effects can occur after shorter durations (Brent and Herricks, 1998; Mebane et al., 2019).

The potential for shorter-term exposures (e.g., one hour or less) to result in delayed effects has long been recognized. In the "Guidelines for Deriving Numerical National Water Quality Criteria for the Protection of Aquatic Organisms and Their Uses," which established the basis for deriving aquatic life criteria, Stephan et al. (1985) state for acute criteria "one hour is probably an appropriate averaging time because high concentrations of some materials can cause death in one to three hours. Even when organisms do not die within the first hour or so, it is not known how many might have died due to delayed effects (Stephan et al., 1985). Recent scientific investigations support that shorter-term exposures, can cause delayed acute effects (Brent and Herricks, 1998; Mebane et al., 2019). The one-hour acute exposure duration is intended to reflect this knowledge.

Multiple chemical exposures (e.g., PAHs) may occur after wet weather events that cause stormwater discharges; the current science indicates that effects of multiple individual chemicals in the same class are often found to be additive (ECETOC, 2001; Jakobs et al., 2020; EPA, 2008; NAS, 2013). The one-by-one chemical consideration for benchmarks in the MSGP does not address potential additive effects, and while EPA establishes the benchmark thresholds at a level below which a facility's discharges pose less potential for a water quality concern, possible additive effects of multiple chemicals suggests the benchmark thresholds are unlikely to be overprotective in general.

Although numerous laboratory studies document the potential impacts to aquatic life of pulsed exposure to contaminants, impacts from wet weather events can be challenging to document in the field, due in part to the intermittent nature of the events and sampling logistics. However, the recurrent die off of salmon returning to urban streams in the Puget

Sound provides an example of impacts that can be directly linked with stormwater pollutants (McIntyre et al., 2015; Scholz et al., 2011).

Brent, R.N. and E.E. Herricks. 1998. Postexposure effects of brief cadmium, zinc, and phenol exposures on freshwater organisms. *Environmental Toxicology and Chemistry*. 17(10): 2091–2099. https://doi.org/10.1002/etc.5620171027

ECETOC Technical Report No. 80 (2001). European Centre for Ecotoxicology and Toxicology of Chemicals. Aquatic Toxicity of Mixtures.

EPA (2008). Framework for Application of the Toxicity Equivalence Methodology for Polychlorinated Dioxins, Furans, and Biphenyls in Ecological Risk Assessment, EPA/100/R-08/004 June 2008

Jakobs, G., Krüger, J., Schüttler, A. et al. Mixture toxicity analysis in zebrafish embryo: a time and concentration resolved study on mixture effect predictivity. Environ Sci Eur 32, 143 (2020). https://doi.org/10.1186/s12302-020-00409-3

McIntyre, J.K., J.W. Davis, C. Hinman, K.H. Macneale, B.F. Anulacion, N.L. Scholz, and J.D. Stark. 2015. Soil bioretention protects juvenile salmon and their prey from the toxic impacts of urban stormwater runoff. *Chemosphere*. (0). https://doi.org/10.1016/j.chemosphere.2014.12.052

Mebane, C.A., M.J. Chowdhury, K.A.C. De Schamphelaere, S. Lofts, P.R. Paquin, R.C. Santore, and C.M. Wood. 2019. Metal bioavailability models: current status, lessons learned, considerations for regulatory use, and the path forward. *Environmental Toxicology and Chemistry*. 39(1): 60-84. https://doi.org/10.1002/etc.4560

National Academies of Science 2013. Assessing Risks to Endangered and Threatened Species from Pesticides (2013). ISBN 978-0-309-28583-4 | DOI 10.17226/18344

Scholz, N.L., M.S. Myers, S.G. McCarthy, J.S. Labenia, J.K. McIntyre, G.M. Ylitalo, L.D. Rhodes, C.A. Laetz, C.M. Stehr, B.L. French, B. McMillan, D. Wilson, L. Reed, K.D. Lynch, S. Damm, J.W. Davis, and T.K. Collier. 2011. Recurrent Die-Offs of Adult Coho Salmon Returning to Spawn in Puget Sound Lowland Urban Streams. *PLoS ONE*. 6(12): e28013. https://doi.org/10.1371/journal.pone.0028013

Stephan, C.E., D.I. Mount, D.J. Hansen, J.H. Gentile, G.A. Chapman, and W.A. Brungs. 1985. Guidelines for deriving numerical national water quality criteria for the protection of aquatic organisms and their uses. U.S. Environmental Protection Agency, EPA 822-R-85-100, NTIS PB85 227049, Duluth, Narragansett, and Corvallis. 98 pp.

New Benchmark Thresholds for Aluminum and Copper

Aluminum

The 2021 MSGP benchmark threshold for aluminum changed to 1,100 µg/L from the 2015 MSGP threshold of 750 µg/L. Just like the 2015 MSGP, the 2021 MSGP requires operators in subsectors C2, E1, F1, F2, H1, M1, N1, Q1, and AA1 to conduct benchmark monitoring for aluminum. The 2015 MSGP benchmark value for aluminum was set to 750 µg/L (0.75 mg/L) based on the 1988 national recommended acute freshwater aquatic life criteria. In 2018, EPA updated the recommended aluminum criteria to reflect the latest scientific understanding of how water chemistry parameters alter the bioavailability of aluminum and affect toxicity to aquatic species. The updated criteria use a criteria calculator that incorporates a multiple linear regression method to derive values resulting from the interaction of total hardness, pH, and dissolved organic carbon (DOC). Therefore, rather than setting a single fixed value, the new recommended criteria values vary depending on the water chemistry conditions in the waterbody.

Considering whether to update the MSGP benchmark thresholds to reflect the latest recommended water quality criteria is generally undertaken each time EPA revises this permit. The NRC study also recommended that the 2021 MSGP benchmark threshold for aluminum should reflect the updated criteria. Given the site-specific nature of the new criteria, EPA explored the best way to update the MSGP's benchmark using the revised recommended aluminum criteria, as discussed in additional detail below. The 2021 MSGP incorporates the revised recommended criteria in two ways, 1) using a single nationally-representative value based on the criteria calculator as the MSGP benchmark threshold, and 2) providing operators who may exceed this benchmark the opportunity to conduct a site-specific analysis using the criteria model and representative ambient water chemistry data for pH, DOC, and hardness for the site to demonstrate to EPA that their discharges would not exceed their refined site-specific value. The details of the benchmark and the optional site-specific derivation are discussed in the next sections.

Copper

The 2021 MSGP freshwater benchmark threshold for copper changed to 5.19 µg/L from a hardness-based range in the 2015 MSGP. Like the previous permit, the 2021 MSGP requires operators in subsectors A2, F2, F3, F4, G2, and N1 to conduct benchmark monitoring for copper. The 2015 MSGP copper benchmark value for freshwater was hardness-dependent based on the 1984 national recommended acute freshwater aquatic life criteria, ranging from 3.8 µg/L to 33.2 µg/L. In 2007, EPA revised the recommended copper criteria using new data on copper toxicity and its effects on aquatic life that became available. The new criteria are based on the Biotic Ligand Model (BLM) – a metal bioavailability model that uses receiving water body characteristics to develop site-specific water quality criteria. The BLM requires ten input parameters to calculate the freshwater copper criterion: temperature, pH, dissolved organic carbon (DOC), calcium, magnesium, sodium, potassium, sulfate, chloride, and alkalinity. Although the recommended criteria were updated in 2007, EPA decided to not update the copper benchmark in the 2015 MSGP due to the extra sampling burden that would be placed on operators to acquire the site-specific water quality data needed by the BLM.

For the 2021 MSGP, EPA re-evaluated the possibility of using the current recommended copper criteria to inform the MSGP benchmark, discussed below. As with aluminum, the 2021 MSGP incorporates the revised recommended copper criteria in the same two ways, 1) using a single nationally-representative value informed by the BLM as the benchmark threshold, and 2) providing operators who may exceed this benchmark the opportunity to conduct a site-specific individual analysis using the copper BLM and representative ambient water chemistry data for temperature, pH, dissolved organic carbon (DOC), calcium, magnesium, sodium, potassium, sulfate, chloride, and alkalinity for the site to demonstrate to EPA that their discharges would not exceed their refined site-specific value.

Derivation of New Benchmarks for Aluminum and Copper

The new benchmark thresholds of 1,100 µg/L for aluminum and 5.19 µg/L for copper align with the updated acute aquatic life criteria and account for the required water quality parameter inputs to reflect the latest methods and toxicity data available. To generate these thresholds, EPA calculated nationally representative acute water quality criteria values for aluminum and copper using water quality data reported in the USGS National Water Information System (NWIS) database and collected from surface waters across the conterminous U.S. between 1984 and 2018. For copper, these data were evaluated for the input water chemistry parameters of calcium (Ca), magnesium (Mg), sodium (Na), sulfate (SO4), chloride (Cl), potassium (K), alkalinity, temperature, hardness, pH, and dissolved organic carbon (DOC). For aluminum, these data were evaluated for the input water chemistry parameters of pH, DOC, and hardness. EPA also included the following supporting information in the data analysis: sampling station ID number, sample date, sample season, state, EPA region, stream order, location name, latitude, longitude, and ecoregion. After initial compilation, data were evaluated for usability based on several other quality assurance factors (for complete details on the QA process (see "Industrial stormwater Technical Memo for aluminum and copper criteria percentiles" in Docket ID# EPA-HQ-OW-2019-0372). The final database included a total of 686 NWIS sample stations and 38,603 records. EPA then analyzed the data using the Aluminum Criteria Calculator R Code V2.0 and the Copper Biotic Ligand Model (BLM) V2.2.1 for criteria derivation. Based on this analysis, EPA derived values used for the benchmark monitoring thresholds for aluminum and copper that represent a level of protection (LOP) that is estimated to be protective 90% of the time, at a national level, for 95% of the genera.

This analysis generated an aluminum criteria value of 1,100 µg/L used for the 2021 MSGP's benchmark threshold, reflecting the same intended level of protection but based the best available science with improved accuracy of the intended LOP from the previous permit's benchmark. The updated freshwater acute criterion, on which the new benchmark threshold is based, considers the variable effects of water chemistry on aluminum toxicity and includes additional species data. The data in the 1988 recommended water quality criteria were not normalized to any water chemistry conditions making it difficult to compare the magnitude of the two criteria. The revised recommended criterion represents the concentration of aluminum at which approximately 95% of genera in a freshwater aquatic ecosystem should be protected if one-hour average (duration) concentration of total aluminum is not exceeded more than once in three years (frequency) (see Final Aquatic Life Ambient Water Quality Criteria for Aluminum – 2018 (EPA-822-R-18-001)).

The analysis also generated a value 5.19 µg/L for the copper criteria for the 2021 MSGP's benchmark. Using the BLM-based water quality criteria reflects the same intended LOP but based the best available science with improved accuracy of the intended LOP from the hardness-based benchmark value in the 2015 MSGP, which ranged from 3.8 µg/L to 33.2 µg/L. The revised benchmark threshold will in some cases be higher and in other cases be lower than the hardness-based benchmark threshold in the 2015 MSGP. Although there is not a single water quality criteria value to use for comparison purposes, the BLM-based water quality criteria for copper provides an improved framework for evaluating an LOP that is consistent with the LOP that was intended by the 1985 Guidelines (i.e., a 1-in-3 year exceedance frequency that will be protective of 95% of the genera) (see Aquatic Life Ambient Freshwater Quality Criteria - Copper 2007 Revision (EPA-822-R-07-001)).

As EPA moves toward developing more bioavailability-based recommended water quality criteria, the NPDES program will continue to seek the input of EPA's criteria experts in considering future revised criteria as benchmarks in the MSGP. For detailed information on the 2018 recommended aluminum criteria and the 2007 recommended copper criteria, please refer to publications "Final Aquatic Life Ambient Water Quality Criteria for Aluminum – 2018 (EPA-822-R-18-001)" and "Aquatic Life Ambient Freshwater Quality Criteria - Copper 2007 Revision (EPA-822-R-07-001)," respectively. For a detailed description of the criteria analysis used for the 2021 MSGP, see "Industrial stormwater Technical Memo for aluminum and copper criteria percentiles" in Docket ID# EPA-HQ-OW-2019-0372.

Optional operator-derived aluminum and copper values after benchmark exceedance

The NRC study recommended that EPA allow facilities that repeatedly exceed certain benchmark thresholds to be able to use the latest aquatic life criteria to evaluate water quality risk on a site-specific basis and discontinue comparisons to national benchmarks. Although the current 2018 recommended criteria for aluminum and the 2007 recommended criteria for copper in freshwater provide the flexibility to develop site-specific criteria based on local water chemistry, the extra data collection associated with implementing these new aquatic life criteria makes them challenging to finalize as benchmark thresholds in the MSGP at the individual facility level, given there are an estimated 355 facilities that monitor for aluminum and 94 facilities that monitor for copper. Collection and reporting of several in-stream water chemistry parameters would be required of each operator ahead of or concurrent with NOI submission to allow EPA to derive a facility-specific benchmark threshold by the time the first quarter of benchmark monitoring is due. At this time, EPA finds this approach to be unduly burdensome to both the operator and to EPA as the permitting authority for this general permit. One of the main benefits of a general permit is that it streamlines permit coverage for a large number of operators with similar discharges that are subject to the same or similar monitoring requirements. A general permit can allow the permitting authority to allocate resources efficiently and provide timelier permit coverage rather than issuing an individual permit and individually-tailored monitoring requirements to each facility.

However, the current recommended water quality criteria represent the latest scientific understanding of toxicity and bioavailability for aluminum and copper for protecting aquatic ecosystems from adverse impacts from short-term or intermittent exposure, such as that from stormwater. EPA recognizes the benefit of a facility-specific criteria in identifying when stormwater discharges of these constituents at certain facilities may pose less of a concern than the nationally-representative benchmarks would otherwise indicate. Therefore, for the 2021 MSGP, EPA is allowing an exception from Additional Implementation Measures (AIM) and continued benchmark monitoring requirements for operators that exceed the MSGP benchmark thresholds for either aluminum or copper (for discharges to freshwater) and can demonstrate to EPA that their discharge(s) would not result in an exceedance of a derived facility-specific value. See Part 5.2.6.4 for details and conditions of the exception.

New Benchmark Threshold for Selenium (for Discharges to Freshwater)

As in the 2015 MSGP, the 2021 MSGP requires operators in subsectors G2 and K1 to conduct benchmark monitoring for selenium. The 2015 MSGP benchmark threshold for freshwater was set to 5 µg/L, based on the 1999 national recommended chronic freshwater aquatic life criteria. EPA used the chronic criterion for the benchmark threshold since at the time issuance of the 2015 MSGP, no acute freshwater criterion had been published. In 2016, EPA updated the national recommended aquatic life chronic criteria for selenium in freshwater that reflects the latest science and consists of four elements, all of which are protective against chronic selenium effects (see Aquatic Life Ambient Water Quality Criterion for Selenium – Freshwater 2016, EPA 822-R-16-006). Two elements are based on the concentration of selenium in fish tissue and two elements are based on the concentration of selenium in the water column, which are the elements of the criteria most relevant in determining a revised benchmark threshold.

The recommended water-related elements of the update selenium criteria are: (1) a monthly average exposure water column element and (2) an intermittent exposure water column element to account for potential chronic effects from short-term exposures. Both water column elements include two values: one for lentic waters (e.g., lakes and impoundments) and one for lotic waters (e.g., rivers and streams). The recommended selenium criteria for the monthly average exposure water column element are 1.5 µg/L for still/standing (lentic) waters and 3.1 µg/L for flowing (lotic) waters, which EPA recommended states use when implementing the criteria under the NPDES program. Based on this recommendation, the 2021MSGP includes the benchmark threshold of 1.5 µg/L for stormwater discharges to still/standing (lentic) waters and 3.1 µg/L for stormwater discharges to flowing (lotic) waters. Operators required to conduct benchmark monitoring for selenium are required to identify on the NOI whether the receiving waterbody is still/standing or flowing for each discharge point. Operators should refer to the state's waterbody classifications/definitions where available.

EPA has not developed specific concentration-based acute criteria in the 2016 national recommended aquatic life criteria for selenium; however, the chronic criterion is expected to be protective of acute effects on aquatic communities. To account for acute effects, EPA derived an intermittent exposure equation to address short-term exposures (such as stormwater) that contribute to the bioaccumulation of selenium and reproductive effects on fish species. The equation includes a translation of the chronic criteria, which must be calculated based on the background base-flow concentration of selenium in the receiving water and the length of exposure. See Table 1 on page XV of the final recommended criterion document for selenium https://www.epa.gov/sites/production/files/2016-07/documents/aquatic_life_awqc_for_selenium_-_freshwater_2016.pdf.

The NRC study recommended that EPA allow operators that repeatedly exceed the benchmark threshold for selenium to use the EPA-developed intermittent exposure equation in the revised recommended water quality criteria to evaluate water quality risk on a site-specific basis and discontinue comparisons to the MSGP benchmark threshold. Allowing operators who have repeatedly exceeded benchmarks to perform facility-specific analyses could provide additional information on any potential adverse effects that could occur based on specific facility conditions. However, optional use of the selenium intermittent exposure equation for such operators requires gathering additional data, including average background base-flow concentration of selenium in the receiving water and the length of exposure based on the fraction of any 30-day period during which elevated selenium concentrations occur. Given that reported benchmark data under the 2015 MSGP do not indicate a high incidence of exceedance of the 2015 MSGP selenium benchmark and the extra data collection associated with implementing the intermittent exposure water column criteria the 2021 MSGP does not include the option to use the intermittent exposure water column aquatic life criterion. EPA may consider a site-specific benchmark application of the selenium water quality criteria in a future proposed permit.

Maintaining the Previous MSGP Benchmark Threshold for Arsenic

As in the 2015 MSGP, the 2021 MSGP requires operators in subsectors A2, G2, and K1 to conduct benchmark monitoring for arsenic. The benchmark value in the 2015 MSGP was set to 150 µg/L (0.15 mg/L) for freshwater and 69 µg/L (0.069 mg/L) for saltwater. These values are based on the 1995 national recommended chronic water quality criteria for freshwater and acute criteria for saltwater, respectively. The more conservative chronic freshwater criterion of 150 µg/L was selected for the MSGP benchmark, rather than the acute freshwater criterion which is set to 340 µg/L, based on concerns about near-coastal freshwater discharges flowing quickly into sensitive saline waters, which have a saltwater acute aquatic criteria value of 69 µg/L, five times lower than the acute freshwater criterion. The NRC study recommended that EPA base the freshwater benchmark threshold on the recommended acute aquatic life criterion of 340 ug/L unless EPA can justify why arsenic in stormwater from freshwater in near-coastal setting is of concern or until the Agency develops a criterion based on intermittent exposure. For the 2021 MSGP, and as stated in previous MSGPs, EPA will continue using the recommended chronic freshwater criteria of 150 µg/L for setting the freshwater arsenic benchmark given that the Agency prefers not to weaken a discharge requirement unless good scientific evidence exists that a pollutant is less toxic than previously believed. This is not the case with arsenic. Furthermore, arsenic toxicity increases substantially in saline waters. Since many permitted facilities under EPA's

MSGP are located in coastal states, and their discharge may reach saline waters quickly, EPA will continue to use the chronic criteria for arsenic as a benchmark to protect these estuarine environments.

New Benchmark Threshold for Cadmium

As with the 2015 MSGP, the 2021 MSGP requires operators in subsectors G2 and K1 to conduct benchmark monitoring for cadmium. EPA based the 2015 MSGP benchmark threshold on the 2001 national recommended acute aquatic life criterion that was hardness-dependent for freshwater (2.1 ug/L based on a hardness of 100 mg/L) and 40 ug/L for saltwater. In 2016, EPA updated the freshwater criterion to continue to be hardness-dependent (1.8 ug/L based on a hardness of 100 mg/L) and the saltwater criterion to 33 ug/L (see 81 FR 19176). The revised criteria represent the best science available by accounting for new laboratory aquatic toxicity tests, including the effects of total hardness on cadmium toxicity and included 75 new species and 40 new genera in the testing process. Based on the revised criteria, the 2021 MSGP includes a new freshwater benchmark for cadmium that continues to be hardness-dependent (at a hardness of 100 mg/L the benchmark is 1.8 µg/L) and a new saltwater benchmark of 33 µg/L.

Suspending the Benchmark Threshold for Magnesium

The 2015 MSGP required operators in subsector K1 to monitor for magnesium and included a benchmark value of 0.064 mg/L. The NRC study recommended that EPA remove the magnesium benchmark from the 2021 MSGP since it is a "natural component of surface and groundwater and does not appear to be toxic to a majority of aquatic organisms at concentrations likely to be encountered in most waters" (NRC, 41). Significant evidence does not exist to indicate adverse impacts of aquatic organism, and EPA does not provide an aquatic life criterion for magnesium. Magnesium concentrations present in stormwater are not anticipated to be toxic to most aquatic organisms.[7] EPA agrees with the NRC's analysis and does not have a historical record to support continuing to require this benchmark parameter and therefore removed magnesium as a benchmark in the 2021 MSGP. If EPA develops an aquatic life criterion for magnesium in the future, the Agency may consider including it in a future proposed permit.

Suspending the Benchmark Threshold for Iron

In the 2015 MSGP, EPA required operators in subsectors C1, C2, E2, F2, G2, H1, L2, M1, N1, O1, Q1, and AA1 to conduct benchmark monitoring for iron. The 2015 MSGP benchmark was set to the 1986 criteria of 1,000 µg/L. EPA has not developed national recommended acute aquatic life criteria for iron since the MSGP was originally issued. The NRC study found few studies on the acute effects of iron on aquatic organisms, and the studies that were referenced suggest lethal effects occur well above the 2015 MSGP benchmark over longer time periods. Another study cited by the NRC also suggested that iron has relatively low toxicity and bioaccumulation of iron does not pose a substantial hazard to higher trophic levels, therefore it is unlikely that a criterion based on intermittent exposure would be necessary. The NRC recommended that EPA no longer require an iron benchmark. EPA has removed iron as a benchmark in the 2021 MSGP. If EPA revises the recommended aquatic life criterion for iron in the future, the Agency may consider including it in a future proposed permit.

---

[7] van Dam, R. A., A. C. Hogan, C. D. McCullough, M. A. Houston, C. L. Humphrey, and A. J. Harford. 2010. Aquatic toxicity of magnesium sulfate, and the influence of calcium, in very low ionic concentration water. Environmental Toxicology and Chemistry 29(2):410 – 421.

Part 4.2.2.3 Benchmark Monitoring Schedule

In the 2021 MSGP, operators required to conduct sector-specific benchmark monitoring must at a minimum do so quarterly in the first year of permit coverage and again in the fourth year of permit coverage, unless a modified benchmark monitoring schedule is included in the SWPPP for "Facilities in Climates with Irregular Stormwater Discharges" (see Part 4.2.2.4). The new benchmark monitoring schedule is updated from the 2015 MSGP and extends the minimum benchmark monitoring from four quarters to at least eight quarters under the 2021 MSGP. The 2015 MSGP required only four quarters of benchmark monitoring in the first year of permit coverage, after which benchmark monitoring could be discontinued for the remainder of the permit if the average of four quarters of monitoring was below the benchmark threshold. Requiring monitoring twice during the permit term at the beginning and again towards the end of the permit allows operators to better characterize their industrial stormwater discharges and describe industrial SCM performance with additional sampling data throughout their permit coverage. If the MSGP is administratively continued at the end of its five-year permit term, benchmark monitoring that was applicable at the time of expiration would continue to be required for operators authorized under the permit prior to its expiration. If monitoring data are unable to be reported electronically after the expiration of the permit, operators would be required to maintain data on site with the SWPPP and be made available to EPA upon request.

The 2021 MSGP requires that applicable operators conduct quarterly benchmark monitoring in their first year of permit coverage, beginning in the first *full* quarter of permit coverage, no earlier than May 30, 2021, just as the 2015 MSGP required. An operator that does not exceed the four-quarter annual average for a given parameter can discontinue benchmark monitoring for that parameter for the next two years (i.e., the next eight quarters). Quarterly benchmark monitoring then resumes in the fourth year of permit coverage for another four quarters for all parameters, unless the first quarter of the operator's fourth year of permit coverage occurs on or after the date this permit expires.

However, if during the first year of benchmark monitoring, the annual average for a parameter exceeds the benchmark threshold, the operator must comply with Part 5 (Additional Implementation Measures responses and deadlines), and continue quarterly benchmark monitoring for that parameter for four quarters until results indicate that the annual average for the parameter is no longer exceeded. At this point, the operator can discontinue monitoring for that parameter until monitoring resumes in the fourth year of permit coverage for all parameters. The same AIM requirements apply for any exceedance that occurs during benchmark monitoring in the fourth year. If the annual average for a parameter exceeds the benchmark threshold, the operator must comply with Part 5 and continue quarterly benchmark monitoring for that parameter until results indicate that the annual average is no longer exceeded, after which the operator can discontinue benchmark monitoring for that parameter for the remainder of permit coverage.

Under the new schedule, regardless of when the operator discontinued monitoring for any benchmark parameter, monitoring resumes for all parameters for four quarters in the fourth year of permit coverage (unless the permit has already expired). It is possible that an operator with continued benchmark exceedances in years two and three of permit coverage will be required to continue monitoring through their second and third years of permit coverage. In the scenario where the operator receives results in their third year of permit coverage that the benchmark threshold is no longer exceeded, the operator is still required to monitor again the following year, in their fourth year of permit coverage. The principle underpinning this schedule is that the relief period from benchmark monitoring between the first and fourth year decreases if benchmark exceedances continue and additional monitoring is required. During this year, operators may also be conducting continued benchmark monitoring in compliance with AIM for certain parameters that have ongoing exceedances.

Exceptions for data exceeding benchmarks and compliance with AIM, including from natural background pollutant sources and run-on, were moved to Part 5.2.6 AIM Exceptions. If results from continued quarterly monitoring, as required under AIM, show that no exceedance of the annual average has occurred (i.e., no AIM triggering event has occurred), the operator can discontinue benchmark monitoring for the next eight quarters. After eight "off-quarters," the benchmark monitoring cycle then resumes for another four quarters, as described above.

Under the 2021 MSGP, an annual average exceedance for a parameter can occur under two mathematically related conditions:

> (a) The four-quarterly annual average for a parameter exceeds the benchmark threshold; or
>
> (b) Fewer than four quarterly samples are collected, but a single sample or the sum of any sample results within the sampling year exceeds the benchmark threshold by more than four times for a parameter. This result indicates an exceedance is mathematically certain (i.e., the sum of quarterly sample results to date is already more than four times the benchmark threshold). EPA notes that because pH is on a logarithmic scale, an annual average exceedance for pH can only occur if the four-quarter annual average exceeds the benchmark threshold.

The two exceedance triggering conditions detailed in this Part are the same as in the 2015 MSGP but are specifically separated out in the 2021 MSGP for clarity. This delineation ensures that operators are aware that a benchmark exceedance can also occur from one high quarterly sample, or the average of two or three quarterly samples, if high enough, and that AIM responses and deadlines in Part 5 must be followed as soon as the operator knows an annual average exceedance is certain.

40 C.F.R. 122.48(b) requires that EPA specify any monitoring in the MSGP at an interval and frequency "sufficient to yield data which are representative of the monitored activity." The 2021 MSGP extended benchmark monitoring schedule will ensure that operators have current data to characterize their stormwater discharges throughout their permit coverage. The 2019 NRC study observed that quarterly stormwater event samples collected over one year as in the 2015 MSGP were inadequate to characterize industrial stormwater discharge or describe long-term industrial SCM performance. The study states that "extended sampling over the course of the permit would provide greater assurance of continued effective stormwater management and help identify adverse effects from modifications in facility operation and personnel over time" (NRC, 65). Although the NRC recommended a minimum of continued annual benchmark monitoring through the permit term, for the 2021 MSGP EPA is requiring "two rounds" of quarterly benchmark monitoring occurring in the first and fourth years of permit coverage. This schedule is more appropriate than continued annual monitoring for the MSGP because operators are already accustomed to the four-quarter sampling schedule, and the follow-up action protocol (AIM in Part 5.2) is also based on four-quarter averages.

Because some operators choose to sample more than the required number of times, EPA has included specific language in the permit that the extra samples may be used to calculate their benchmark monitoring average. Any additional sampling does not reduce the requirement that the monitoring be completed over a minimum of four calendar quarters. Therefore, additional samples collected in one quarter for this purpose cannot replace sampling required in other quarters. (Note: the requirement for four calendar quarters of monitoring is not applicable to airports given that the monitoring requirements for that sector are related to winter application of deicing chemicals.)

The monitoring periods, detailed in Part 4.1.7, are as follows:

- January 1 – March 31
- April 1 – June 30
- July 1 – September 30
- October 1 – December 31

Part 4.2.2.4 Exception for Facilities in Climates with Irregular Stormwater Discharges

This Part allows for an exception from benchmark monitoring for facilities in climates with irregular stormwater discharges as described in Part 4.1.6 (e.g., areas where limited rainfall occurs during parts of the year (e.g., arid or semi-arid climates) or in areas where freezing conditions exist that prevent discharges from occurring for extended periods). EPA is retaining this exception from the 2015 MSGP to provide flexibility to those operators in these climates. Such operators may modify the quarterly schedule provided the operator reports the revised schedule directly to EPA by the due date of the first benchmark sample (see EPA Regional contacts in Part 7.8), and the operator keeps this revised schedule with the facility's SWPPP as specified in Part 6.5. When conditions prevent the operator from obtaining four samples in four consecutive quarters, they must continue monitoring until they have the four samples required for calculating the benchmark monitoring average. As noted in Part 4.1.7, the operator must use the DMR form to indicate any 3-month interval that it did not take a sample.

Part 4.2.2.5 Exception for Inactive and Unstaffed Facilities

This Part allows for an exception from benchmark monitoring for facilities that are both inactive and unstaffed, when such facilities no longer have industrial activities or materials exposed to stormwater. EPA is retaining this exception because these facilities will not be contributing pollutants in stormwater discharges. These facilities could alternatively submit a No Exposure Certification terminating permit coverage. However, EPA realizes that some facilities plan to recommence industrial activity in the future and therefore may wish to keep active permit coverage. To qualify for this exception, a facility must maintain a signed certification with their SWPPP documentation (Part 6.5 of the permit) that indicates that the site is inactive and unstaffed, and that there are no industrial activities or materials exposed to stormwater. Operators are not required to obtain advance approval for this exception. The 2021 MSGP retains the allowance for inactive and unstaffed sites in the mining industry (i.e., Sectors G, H, and J) to qualify for this exception where some industrial activities or materials are still exposed to stormwater. This provision is included for mining sites because of the large number of extremely remote sites in these sectors, and the impracticability/infeasibility of reaching these sites during qualifying storm events. However, these sites must still be identified in a SWPPP, and must still adopt SCMs to minimize pollutant discharges and meet water quality standards.

The permit clarifies that if circumstances change and industrial materials or activities become exposed to stormwater or facilities become active and/or staffed, this exception no longer applies and operators must immediately begin complying with the applicable benchmark monitoring requirements under Part 4.2.2 as if they were in the first year of permit coverage, and notify EPA of the change in the NOI by submitting a "Change NOI" form. In the same way, if an operator does not qualify for this exception at the time it is authorized to discharge, but during the permit term the facility becomes inactive and unstaffed, and there are no industrial materials or activities that are exposed to stormwater, then the operator must notify EPA of this change in the "Change NOI" form. The operator may discontinue benchmark monitoring once they have done so and have prepared and signed the statement described above concerning their qualification for this special exception.

Part 4.2.3 Effluent Limitations Monitoring

Numeric effluent limitations have been included in previous versions of the MSGP, based on national effluent limitation guidelines for certain industry-specific discharges (see Part 4.2.3). Consistent with minimum monitoring requirements for NPDES permit limits established at 40 CFR 122.44(i), operators must monitor for these parameters at least once each year for the duration of permit coverage. Numeric effluent limitations are specified in the sector-specific requirements in Part 8. Monitoring for all parameters must be conducted according to the procedures in Part 4.1 unless otherwise noted.

The 2021 MSGP retains the requirement for corrective action whenever there is an exceedance of a numeric effluent limitation.

Part 4.2.3.2 clarifies that facilities subject to effluent limitation guidelines are required to monitor each discharge point discharging stormwater, and that the flexibility afforded for benchmark and impaired waters monitoring for substantially identical discharge points (SIDPs) does not apply to effluent limitation guidelines monitoring.

EPA also clarifies that, in contrast to benchmarks, an exceedance of an effluent limitation constitutes a violation of the permit. Failure to conduct required corrective action and follow-up monitoring as required in Part 4.2.3.3 is an additional violation.

Additionally, facilities that use coal simply for steam generation are not subject to numeric effluent limitations. Applicable control measures for these facilities must be selected, designed, installed, and implemented consistent with the stormwater control requirements established in Part 2 of the permit.

Part 4.2.3.3 specifies follow-up monitoring requirements for pollutants that exceed any effluent limitation contained in the permit. EPA is maintaining the requirement to conduct follow-up monitoring as a way to ensure that facilities come back into compliance with applicable effluent limitations as soon as possible. While the NPDES regulations require a minimum of annual monitoring to demonstrate compliance with applicable effluent limitations, the vast majority of NPDES permits for industrial wastewater discharges require more frequent monitoring (up to daily for certain pollutants/sources in some instances). Monitoring at the regulatory minimum of once per year is appropriate for stormwater discharges, provided facilities remain in compliance with the numeric effluent limitations. However, it is appropriate to require more frequent monitoring once the effluent limitation is exceeded. Otherwise, there would be an additional year to wait to confirm that facilities have come back into compliance with the limitation. This is an unacceptably long period for facilities to be potentially out of compliance with the limitation. EPA notes that failure to complete follow-up monitoring and reporting within the stipulated timeframes constitutes additional violations of the permit, in addition to the initial effluent limitation violation.

Consistent with other types of effluent monitoring, the permit requires that operators report follow-up monitoring results to EPA through EPA's DMR system (see Part 7). Procedures and timeframes for reporting exceedances of numeric effluent limitations are described in Part 7.5 of this Fact Sheet.

Part 4.2.4 State or Tribal Required Monitoring

Where a state or tribe has imposed a numeric effluent limitation, has established a wasteload allocation, or has stipulated specific monitoring requirement(s) as a condition for certification under CWA Section 401, a minimum monitoring frequency of once-per-year has been included in the permit. This annual monitoring frequency applies only if a state or tribe does not specify an alternative monitoring frequency. Exceedances of state or tribal numeric effluent limitations are permit violations in the same way as exceedances of effluent limitation guidelines-based limitations are violations. Both types of violations require the same corrective action and follow-up monitoring.

Part 4.2.5 Impaired Waters Monitoring

This Part contains provisions for monitoring stormwater discharges to water quality impaired receiving waters. The following is a step-by-step discussion on how an operator should determine appropriate monitoring requirements.

Operators must indicate in their NOI whether they discharge stormwater to an impaired water, and, if so, the pollutants causing the impairment, or any pollutants for which there is a TMDL. To assist operators in determining their receiving waters' information, NeT will automatically provide receiving waters' information and their impairment status based on the latitude and longitude of stormwater discharge points the operator provides on the NOI form. This information is also readily accessible from the state or tribal integrated report/CWA section 303(d) lists of waters.

If the discharge is to an impaired water, the monitoring requirements under Part 4.2.5 are triggered; otherwise, a facility has no obligations under Part 4.2.5. EPA specifies that facilities will be considered to discharge to an impaired water if the first water of the United States to which they discharge is identified by a state, tribe, or EPA pursuant to section 303(d) of the CWA as not meeting an applicable water quality standard, or has been removed from the 303(d) list because the impairments are addressed in an EPA-approved or established TMDL, or is covered by pollution control requirements that meet the requirements of 40 CFR 130.7(b)(1). For discharges that enter a separate storm sewer system prior to discharge, the first water of the United States discharged to is the waterbody that receives the stormwater discharge from the storm sewer system.

When developing TMDLs, EPA and the states evaluate contributions from upstream segments and contributing waterbodies. As such, in some instances, upstream sources may be identified as a contributor to an impairment. Where EPA has reason to believe that stormwater discharges at permitted facilities will not be controlled as necessary to meet applicable water quality standards, notwithstanding any indication in a facility's NOIs that it does not discharge to an impaired water, EPA may require the operator to perform additional monitoring and/or adopt additional control measures to address the potential contribution to the impairment, i.e., to ensure that the discharge is controlled as necessary to meet water quality standards. In these instances, EPA will notify the operator, in writing, of any additional obligations, including monitoring requirements, to meet such water quality-based effluent limit.

The permit requires facilities to monitor for all pollutants for which the receiving waterbody is impaired, with a few noteworthy exceptions as discussed below. For waters impaired by pollutants without an approved TMDL, monitoring is required where a standard analytical test method in 40 CFR Part 136 exists for the pollutant or surrogate parameter. If the pollutant for which the waterbody is impaired is suspended solids, turbidity or sediment/sedimentation, the parameter to be monitored is total suspended solids (TSS). If the pollutant of concern is an indicator or surrogate pollutant, then the pollutant indicator (e.g., dissolved oxygen) must be monitored. No monitoring is required when a waterbody's biological communities are impaired but no pollutant is specified as causing the impairment, or when a waterbody's impairment is related to hydrologic modification, impaired hydrology, or other non-pollutant (e.g., exotic species, habitat alterations, objectionable deposits). If a TMDL has been approved or established that applies to the discharge, EPA will notify the facility of any monitoring requirements based on any assumptions and requirements of the TMDL and any wasteload allocation for the discharge.

Part 4.2.5.1 Facilities Required to Monitor Discharges to Impaired Waters

The appropriate impaired waters monitoring frequency is determined based on whether there is an approved or established TMDL for the pollutant in the impaired water.

Discharges to impaired waters without an EPA-approved or established TMDL

For those operators discharging stormwater to impaired waters without an approved or established TMDL, monitoring is required for each discharge point discharging to an impaired water. Operators must monitor once per year in the first and fourth years of permit coverage, unless the operator detects a pollutant in the stormwater discharge for which a receiving water is impaired, in which case annual monitoring must continue. In general, the monitoring schedule is as follows: one year of monitoring for all pollutants for which the receiving water is impaired (in year one of permit coverage) followed by two years without monitoring; one year of monitoring resumes for a sub-set of parameters (in year four of permit coverage).Impaired waters monitoring begins in the first year of permit coverage (beginning in the first full quarter of permit coverage following either May 30, 2021 or the date of discharge authorization, whichever date comes later. Just as in the 2015 MSGP, the 2021 MSGP requires monitoring for one year at each discharge point for all pollutants for which the waterbody is impaired, or their surrogates, and using a standard analytical method, provided one exists (see 40 CFR Part 136). However, unlike the 2015 MSGP, which allowed operators to discontinue impaired waters monitoring for the remainder of their permit coverage after one year if the pollutant was not detected or expected in the discharge, the 2021 MSGP allows operators to discontinue monitoring for just the next two years for any pollutant that is not detected. Annual monitoring must continue for any pollutant that is detected in the discharge for which the receiving water is impaired.

After two years (i.e., in year four of permit coverage), the 2021 MSGP requires that all operators resume monitoring for a sub-set of pollutants initially monitored for in the first year: pollutants (or their indicators or surrogates) that are both causing impairments and associated with the operator's industrial activity and/or are listed as a required benchmark parameter for the operator's subsector in Part 8 and, if applicable, Part 9. To determine this list of pollutants for which the operator must conduct benchmark monitoring for in the fourth year of permit coverage, operators should start with the list of pollutants for which the waterbody is impaired and for which a standard analytical method exists (see 40 CFR Part 136), then compare that list to the industrial pollutants identified in Part 6.2.3.2 and any sector-specific benchmark monitoring pollutants in Part 8, and if applicable, Part 9. The operator must monitor for pollutants that appear on both the impairments list and either the industrial pollutants and/or benchmark list, including "indicator" or "surrogate" pollutants, to understand the extent to which pollutants associated with their industrial activity are contributing to impairments. Operators may discontinue monitoring for the remainder of their permit coverage for any pollutants that are not detected in year four. The extended impaired waters monitoring schedule under the 2021 MSGP will ensure that operators affirmatively determine in their first year of permit coverage that a parameter causing an impairment is not present in the facility's stormwater discharge before narrowing the list of monitored parameters in the fourth year. Requiring monitoring in years one and four allows for a periodic check on the operator's potential contribution to impairments during their permit coverage. The basis for discontinuing impaired waters monitoring under this Part must be documented and retained with the SWPPP, including if the operator has determined that the presence of a pollutant in their discharge is caused solely by natural background sources. Operators are advised to follow the same guidance provided in Part 5.2.6 of this Fact Sheet in determining if the natural background exception is applicable. Operators should consult the applicable EPA Regional Office for help, if needed. The same exception may also be available to dischargers of pollutants attributed solely to run-on sources. This exception is only available after discussing the situation and receiving guidance and approval from the applicable EPA Regional Office.

Operators should consult the applicable EPA Regional Office for any available guidance regarding required monitoring parameters under this Part. EPA notes that, as with all six types of monitoring in the 2021 MSGP, operators can combine monitoring activities where requirements are duplicative (e.g., if effluent limitation guidelines-based limits or benchmark monitoring requirements and impaired water monitoring both require testing for the same parameter at the same discharge point).

Discharges to impaired waters with an EPA-approved or established TMDL

If a facility discharges stormwater to an impaired water with an approved or established TMDL, operators are not required to monitor for the pollutant(s) for which the TMDL was written unless EPA informs the operator that they are subject to such a requirement consistent with the assumptions and requirements of the TMDL and its wasteload allocation. Where applicable, EPA's notice will include specification on which pollutant(s) to monitor and the required monitoring frequency.

The monitoring requirements in Part 4.2.5 are intended to provide the states and EPA with further information on the impacts stormwater from permitted industrial facilities have on impaired waters, and to help ensure that the facilities are not causing or contributing to the impairment. For discharges to impaired waters that do not yet have an approved TMDL for pollutants of concern, these monitoring data are important for developing the TMDL to identify potential sources of the pollutants causing the impairment(s) as well as to identify sources that are not likely to contribute to the impairment(s) and thus may not be included in the TMDL or its wasteload allocation. They are also important for assessing whether additional water quality-based effluent limits, either numeric or qualitative, are necessary on a site-specific basis to ensure that facilities meet water quality standards. For discharges of pollutants to waters with an approved or established TMDL, monitoring data provides a means of ensuring that discharges are controlled consistent with the TMDL, as well as a useful tool to assess the operator's progress toward achieving necessary pollutant reductions consistent with any wasteload allocation.

Part 4.2.5.2 Exception for Inactive and Unstaffed Facilities

This Part of the permit includes an exception from impaired waters monitoring for facilities that are both inactive and unstaffed, when such facilities no longer have industrial activities or materials exposed to stormwater. This exception has different requirements for Sectors G, H, and J.

Part 4.2.6 Additional Monitoring Required by EPA

EPA may determine that additional stormwater discharge monitoring is necessary to meet the permit's effluent limits, specifically the permit's water quality-based effluent limit. In this case, EPA will provide the appropriate facility with a brief description of why additional monitoring is needed, locations and parameters to be monitored, frequency and period of monitoring, sample types, and reporting requirements.

Part 5 Corrective Actions and Additional Implementation Measures (AIM)

The 2021 MSGP retains the corrective action conditions in Part 5.1.1 to ensure effluent limits are met and Part 5.1.2 when construction or a change in design, operation, or maintenance occurs, and corresponding corrective action deadlines in Part 5.1.3, which remain unchanged from the 2015 MSGP. Those corrective action conditions in Part 5.1.1 include an unauthorized release, an exceedance of numeric effluent limits, failed or improperly installed SCMs, and visual assessments indicating water quality standards may be violated. The corrective action condition in Part 5.1.2 applies when construction or a change in design, operation, or maintenance at the facility occurs that significantly changes the nature of pollutants discharged via stormwater from the facility, or significantly increases the quantity of pollutants discharged. If any conditions in Part 5.1.1 or 5.1.2 occurred, Part 5.1.3 requires that the operator implement timely fixes so that the condition triggering the issue is resolved.

Previous MSGPs also required corrective action in the event of an exceedance of a benchmark monitoring threshold. The 2015 MSGP required the operator to review the SWPPP and adjust SCMs, depending on the facility's assessment, to bring any exceedances below the benchmark threshold, and continue quarterly monitoring until no further exceedance occurred.

The 2021 MSGP contains revisions to those corrective actions required for benchmark exceedances, now called Additional Implementation Measures (AIM). The 2021 MSGP AIM requirements keep follow-up actions for benchmark exceedances clear, timely, and proportional to exceedance frequency and duration. The new AIM requirements provide a sequential, stepwise follow-up process if advancement through the AIM levels is warranted. This process provides more regulatory certainty as to what is required of an operator and in what timeframe once a benchmark triggering event occurs. The new requirements also facilitate the identification of any issues and implementation of any follow-up responses in a timely manner and addresses previous stakeholder concerns that the prior MSGP's corrective actions were not sufficient to ensure that discharges under the permit are sufficiently controlled to protect water quality. The 2015 MSGP's corrective actions for benchmark exceedances may have allowed facilities to only make minimal changes, or no changes, in their SWPPP or to their SCMs, which may have led to limited stormwater control measure effectiveness. Under the 2015 MSGP's requirements, facilities' benchmark exceedances as well as their attempts to reduce pollutant levels below the benchmark thresholds could potentially continue in an endless loop, without clear expectations in the permit for how to improve the necessary response, if warranted, nor for how to comply with certainty.

The new AIM process leads the operator through a linear, three-level response triggered by a four-quarter annual average exceedance of a benchmark, or by fewer than four quarterly samples, but where a single sample or the sum of any sample results within the sampling year exceeds the benchmark threshold by more than four times for a parameter, indicating an exceedance is mathematically certain (i.e., the sum of quarterly sample results to date is already more than four times the benchmark threshold). Stepwise advancement through AIM indicates repeated benchmark exceedances and prescribes increasingly robust controls with each subsequent level. In the 2021 MSGP, AIM levels are sequential, and levels cannot be skipped. In other words, an operator would need to progress from baseline status to Level 1 before progressing to Level 2, and Level 2 before progressing to Level 3. The operator is in the best position to evaluate the initial cause of their benchmark exceedance, and should have the opportunity to self-correct in AIM Level 1 before advancing to Level 2 or subsequently to Level 3, in which additional SCMs are no longer optional but required. EPA renamed the three-stages of AIM to be “levels” rather than “tiers,” as it was called during the proposal of the permit, based on public comment to reduce any confusion related to identical terminology related to the tiers of waterbodies for antidegradation purposes (e.g., tier 3 waters) that may also be applicable for some facilities.

However, EPA has always and continues to hold that benchmark thresholds by themselves are not numeric water quality-based effluent limits (or any effluent limit); and therefore, facilities whose responses to benchmark exceedances comply with the permit’s requirements, but do not achieve sub-benchmark pollutant levels, would not be in violation of the permit solely on the basis of the benchmark exceedances because a benchmark exceedance is not definitive proof that a water quality standard has been exceeded. The 2021 MSGP provides a clearer and more robust process to improve the previous permit’s requirements for responding to benchmark exceedances, facilitating the examination and implementation of additional actions that an operator must reasonably take to lower pollutant levels in stormwater discharges and provide effective stormwater control.

The 2021 MSGP’s AIM requirements improve upon the 2015 MSGP’s provisions for responding to benchmark exceedances through a three-stage protocol that gets progressively more prescriptive with the required responses, and thus more protective, when the average of quarterly monitoring results exceed or repeatedly exceed benchmark thresholds. There are three stages of response, known in the final 2021 MSGP as “Additional Implementation Measures,” so-named to bolster EPA’s long-held position that benchmark exceedances alone are not permit violations. The AIM protocol is triggered if an operator has a four-quarterly annual sampling average exceedance, including averages from fewer than four quarters of sampling that demonstrate the annual average will inevitably be exceeded. The AIM triggering events are: (a) The four-quarterly annual average for a parameter exceeds the benchmark threshold; and (b), Fewer than four quarterly samples have been collected, but a single sample or the sum of any sample results within the sampling year exceeds the benchmark threshold by more than four times for a parameter, indicating an exceedance of the annual average is mathematically certain (i.e., the sum of quarterly sample results to date is already more than four times the benchmark threshold). The AIM requirements apply on a parameter-specific, per discharge point basis and supplement, as opposed to supplant, the technology-based, water quality-based, and remaining provisions of the permit. Regarding annual averages, their calculation (i.e., the clock) is reset upon triggering and complying with each AIM level individually and demonstrating that the relevant discharge is below the benchmark threshold for the exceeded parameter. An operator with sampling results that show a triggering event has occurred must continue benchmark monitoring for the same parameter that caused the triggering event until four additional quarters of monitoring do not prompt a triggering event. In addition to the triggering events noted above, the new AIM requirements also detail the required responses, deadlines for implementing those responses, and allowable exceptions.

For the next proposed MSGP, EPA will evaluate the benchmark monitoring data submitted under this permit along with data on the AIM levels triggered by any benchmark exceedances to analyze the effectiveness of the AIM response requirements (i.e., implementing more robust SCMs) on reducing benchmark exceedances.

Part 5.1 Corrective Action

Part 5.1.1 Conditions Requiring SWPPP Review and Revision to Ensure Effluent Limits are Met

As discussed above, the corrective actions conditions in this Part and corresponding corrective action deadlines in Part 5.1.3 remain unchanged from the 2015 MSGP. If operators find that any of the conditions in this Part of the 2021 MSGP have occurred, they are required to review and revise their SWPPP to eliminate the condition so that the permit's effluent limits are met and pollutant discharges are minimized. Operators may become aware of these conditions through an inspection, monitoring, or other means, or if EPA informs the operator of the condition(s).

The SWPPP review should focus on sources of pollution, spill and leak procedures, non-stormwater discharges, selection, design, installation and implementation of stormwater control measures. This Part of the 2021 MSGP specifies the following conditions requiring review and revision to ensure effluent limits are met, which are identical to the correction action triggering conditions in the 2015 MSGP:

- An unauthorized release or discharge (e.g., spill, leak, or discharge of non-stormwater not authorized by the MSGP or another NPDES permit) occurring at the facility.
- A discharge that violates a numeric effluent limitation listed in Table 2-1 and/or in the Part 8 sector-specific requirements.
- Control measures that are not stringent enough for the discharge to be controlled as necessary to meet applicable water quality standards or the non-numeric effluent limits in the permit.
- Where a required stormwater control measure was never installed, was installed incorrectly, or not in accordance with Parts 2 and/or 8, or is not being properly operated or maintained.
- Whenever a visual assessment shows evidence of stormwater pollution (e.g., color, odor, floating solids, settled solids, suspended solids, foam).

Part 5.1.2 Conditions Requiring SWPPP Review to Determine if Modifications Are Necessary.

This Part retains the requirement from the 2015 MSGP that if construction or a change in design, operation, or maintenance at the facility occurs that significantly changes the nature of pollutants discharged via stormwater from the facility, or significantly increases the quantity of pollutants discharged, the operator must review the SWPPP (e.g., sources of pollution, spill and leak procedures, non-stormwater discharges, selection, design, installation and implementation of control measures) to determine if modifications are necessary to meet the effluent limits in the permit. EPA had contemplated under the proposed 2020 MSGP moving this condition to the AIM section in Part 5.2, but based on public comments, this condition remains with the corrective action section for the 2021 MSGP.

Part 5.1.3 Deadlines for Corrective Actions

The 2021 MSGP includes specific deadlines for taking corrective actions to remedy deficiencies. These deadlines remain largely unchanged from the 2015 MSGP. The time limits in Part 5 are those that EPA considers reasonable for making the necessary repairs or modifications and are included specifically so that inadequacies are not allowed to persist indefinitely.

When conditions exist that trigger corrective action, a facility must immediately take (i.e., on the same day the condition was found) all reasonable steps to minimize or prevent pollutant discharges via stormwater until the operator can implement a permanent solution

The permit’s immediate actions are substantially similar to requirements in the 2015 MSGP. Minor changes are clarifying that “all reasonable steps” means responding to the conditions triggering the corrective action (the 2015 MSGP describes “all reasonable steps” to be undertaking initial actions to assess and address the condition causing the corrective action). Additionally, EPA clarifies in the permit that when corrective actions are identified too late in the work day, the corrective action must be performed by the following work day morning (the 2015 MSGP specified that corrective action be initiated the following work day). These changes provide greater assurance that corrective actions are implemented expeditiously to minimize pollutant discharges.

The 2021 MSGP requires that the operator take subsequent action to implement a permanent solution no later than 14 calendar days from discovering the corrective action-triggering condition (e.g., by installing a new or modifying an existing control or by completing any needed stormwater control measure repairs). This requirement has not changed from the 2015 MSGP.

EPA does recognize that there may be circumstances in which immediate action to initiate corrective action may not be possible within the same day a corrective action condition is found. “All reasonable steps” does not necessitate taking action when it is unsafe to do so (e.g., due to inclement weather). EPA also recognizes that there may be circumstances where it is not feasible to complete needed corrective actions within 14 days, and therefore provides that operators may modify the schedule for completing the corrective action so that corrective action is taken as soon as practicable after the 14-day timeframe, and is completed no later than 45 days after discovery of the triggering condition. If it will take longer than 45-days to complete the corrective action, the permit also allows operators to take the minimum additional time necessary to complete the corrective action, provided that the operator notifies the applicable EPA Regional Office. Operators must provide a rationale for an extension of the timeframe, and a corrective action completion date to the applicable EPA Regional Office, and also include this in their corrective action documentation.

EPA recognizes that identifying both the need to take corrective action and the appropriate modifications to the stormwater control measures will, in some cases, be an iterative process. Several storm events may be needed to determine how to fully resolve the triggering issue(s). For example, if a visual assessment indicates that the facility is discharging suspended solids in stormwater, an appropriate corrective action may be to immediately clean up any signs of visible sources of the pollutants on the site (e.g., through immediate sweeping or vacuuming of exposed surfaces), and then to review the SWPPP to identify additional potential deficiencies or pollutant sources. If poor housekeeping is suspected to be the cause, operators may decide to implement a new schedule of increased sweeping or vacuuming within 14 calendar days. However, if a subsequent visual assessment indicates that suspended solids remain a stormwater pollution issue that would be a separate corrective action-triggering event. In such a case, operators would undertake the corrective action review process again in order to assess and correct other deficiencies that are suspected to be the cause, meaning that the corrective action deadlines in Part 5.1.3 would be reset.

EPA emphasizes that these timeframes are not grace periods within which an operator is relieved of any liability for a permit violation that may have triggered the corrective action. If the original inadequacy triggering a corrective action constitutes a permit violation, then that violation is not deferred or erased by the timeframe EPA has allotted for corrective action. In all cases, failing to take corrective action as required in Part 5 constitutes a permit violation separate and apart from any violation that the triggering event may have constituted.

Part 5.1.4 Effect of Corrective Action

The permit states that if the condition triggering the corrective action review is a permit violation (e.g., exceedance of a numeric effluent limitation), correcting it does not remove the original violation. Additionally, failure to take corrective action in accordance with Part 5 is a separate permit violation (in addition to any permit violation that may have triggered corrective action). EPA will consider the appropriateness and promptness of corrective action in determining enforcement responses to permit violations. This provision is unchanged from the 2015 MSGP.

Part 5.1.5 Substantially Identical Discharge Points

If the event triggering corrective action is associated with a discharge point that has been identified as a “substantially identical discharge point” (SIDP) (see Parts 3.2.4.5 and 4.1.1), operators must assess the need for corrective action for all related SIDPs. Any necessary changes to control measures that affect these other discharge points must also be made before the next storm event if possible, or as soon as practicable following that storm event. Any corrective actions must be conducted within the timeframes set forth in Part 5.1.3.

Part 5.2 Additional Implementation Measures (AIM)

Part 5.2.1 Baseline Status

The 2021 MSGP includes a baseline status for all applicable facilities subject to benchmark monitoring once they receive authorization to discharge under Part 1.3, which is typically 30 calendar days after EPA notifies the operator that it has received a complete NOI. If benchmark monitoring results indicate an AIM triggering event has occurred and proceeding sequentially to AIM Level 1, 2, or 3, the operator may return directly to baseline status once the corresponding required response and conditions are met.

Part 5.2.2 AIM Triggering Events

The 2021 MSGP includes two AIM triggering events for all AIM levels and the triggering events do not change from level to level. The triggering events are based on quarterly samples that result in an exceedance of the annual average, including a one-sample exceedance, or two-, or three-sample average exceedance that result in a mathematically certain exceedance of the annual average. The two AIM triggering events are: (a) The four-quarterly annual average for a parameter exceeds the benchmark threshold, and (b) Fewer than four quarterly samples have been collected, but a single sample or the sum of any sample results within the sampling year exceeds the benchmark threshold by more than four times for a parameter. This result indicates an exceedance is mathematically certain (i.e., the sum of quarterly sample results to date is already more than four times the benchmark threshold). EPA notes that because pH is on a logarithmic scale, an annual average exceedance for pH can only occur if the four-quarter annual average exceeds the benchmark threshold. EPA is also developing a simple spreadsheet to assist operators with determining if their samples trigger AIM.

Requiring AIM for a one-sample exceedance, or two-, or three-sample average exceedance that indicates an annual average exceedance, is consistent with the equivalent triggering conditions in the 2015 MSGP and appropriate to ensure that facilities respond in a timely manner as soon as any potential issues are identified. Any quarterly sample collected that results in a benchmark exceedance based on mathematical certainty will trigger a timely response in accordance with the responses and deadlines specified in the permit.

The required responses for each AIM level are also consistent with the familiar recommended protocol contained within EPA's existing industrial stormwater sector-specific fact sheets, which suggest that the operator should first focus on reviews of existing control measures, stormwater pollution prevention plans, and other on-site activities to see if any actions or SWPPP revisions are necessary (as in AIM Level 1), then look at additional pollution prevention/good housekeeping measures that could be implemented (as in AIM Level 2), and finally structural source controls and/or treatment controls that could be installed (as in AIM Level 3).

The following is a discussion of each AIM level.

Part 5.2.3 AIM Level 1

An operator's baseline status will change to Level 1 status if quarterly benchmark monitoring results indicate that an AIM triggering event described above and in Part 5.2.2 has occurred, unless the operator qualifies for an exception under Part 5.2.6.

AIM Level 1 Example A:
Benchmark Monitoring Results that would NOT trigger AIM

Below are example benchmark monitoring results that would NOT trigger any AIM requirements. In these results, AIM is not triggered **because the annual averages are below the benchmark threshold.**

Parameter	Benchmark	AIM 1 triggers:
Total Suspended Solids (TSS) (mg/L)	100 mg/L	• A 4-quarter benchmark average = over 101 mg/L • Fewer than four quarterly samples collected, but a single sample or the sum of any sample results exceeds the benchmark threshold by more than four times = over 401 mg/L

Samples	1st Qtr.	2nd Qtr.	3rd Qtr.	4th Qtr.	Sum to date	Sample Average
Ex. 1	50	150	25	25	250	63
Ex. 2	100	105	100	95	400	100
Ex. 3	0	400	0	0	400	100

AIM Level 1 Example B:
Annual Average Over the Benchmark Threshold

Below are example benchmark monitoring results that WOULD trigger AIM Level 1. In these results, AIM Level 1 is triggered **because the annual average exceeds the benchmark threshold** (or an exceedance of the four-quarter average is mathematically certain i.e., if the sum of quarterly sample results to date is more than four times the benchmark threshold).

Parameter	Benchmark	AIM triggers:
Total Suspended Solids (TSS) (mg/L)	100 mg/L	• A 4-quarter benchmark average = over 101 mg/L • Fewer than four quarterly samples collected, but a single sample or the sum of any sample results exceeds the benchmark threshold by more than four times = over 401 mg/L

Samples	1st Qtr.	2nd Qtr.	3rd Qtr.	4th Qtr.	Sum to date	Sample Average
Ex. 1	105	120	100	95 (Level 1 triggered)	420	105
Ex. 2	300	110 (Level 1 triggered)	*	*	410	Over 101

In Example 1, AIM Level 1 is triggered in the 4th quarter because after 4 samples, the annual average (105 + 120 + 100 + 95 = 420/4 = 105 mg/L) exceeds the benchmark threshold (100 mg/L). AIM Level 1 responses must be completed within 14 days of receipt of laboratory results and quarterly benchmark monitoring must continue for at least the next four quarters.

In Example 2, AIM Level 1 is triggered in the 2nd quarter because the 1st and 2nd quarter results (300 mg/L and 110 mg/L) mean an exceedance of the four-quarter average of the benchmark threshold (100 mg/L) is mathematically certain, even if the 3rd and 4th quarter sampling results denoted by a * were 0 (300 + 110 + 0 + 0 = 410/4 = 102.5 mg/L). AIM Level 1 responses must be completed within 14 days of receipt of laboratory results in the 2nd quarter and quarterly benchmark monitoring must continue for at least the next four quarters.

Part 5.2.3.1 AIM Level 1 Responses

AIM Level 1 requires two responses plus continued quarterly monitoring. These responses are identical to required responses for a benchmark exceedance in the 2015 MSGP. First, the operator would need to immediately review existing control measures, SWPPP, and other on-site activities to see if any actions or SWPPP revisions are necessary. Examples of portions of the facility's control measures, SWPPP, and other on-site activities it should review include sources of pollution, spill and leak procedures, non-stormwater discharges, and selection, design, installation, and implementation of control measures. Second, after reviewing the control measures and SWPPP, the operator would implement those additional implementation measures, such as a single comprehensive clean-up, a change in subcontractor, a modification or replacement of an existing SCM, and/or increased inspections, to bring the exceedances below the parameter's benchmark threshold. However, an operator could determine that, after reviewing the stormwater control measures and SWPPP, nothing further needs to be done to achieve lower pollutant discharge levels. In this case, the operator would be required to document per Part 5.3 and include in the Annual Report why it expected its existing SWPPP and SCMs to bring exceedances below the parameter's benchmark threshold for the next 12-month period. With the variability of stormwater and the small sample set of monitoring results, it may be reasonable for the operator to conclude that the current stormwater control measures are performing appropriately and further monitoring will support that the facility's existing controls will achieve the necessary pollutant reductions. This response mirrors the 2015 MSGP's corrective action response requirements.

Part 5.2.3.2 AIM Level 1 Deadlines

If any modifications to or additional control measures are necessary in response to AIM Level 1, the operator is required to implement those actions or modifications within 14 days of receipt of laboratory results. If doing so within 14 days is infeasible, the operator is required to document per Part 5.3 why it is infeasible to implement such actions or modifications within 45 days of receipt of laboratory results. The 2021 MSGP requires a 14-day deadline for AIM Level 1 responses because EPA expects Level 1 responses to be able to be implemented relatively quickly to address exceedances and any potential impacts on water quality. This deadline is consistent with the previous deadline for corrective actions for benchmark exceedances in the 2015 MSGP.

Part 5.2.3.3 Continued Quarterly Monitoring

After compliance with AIM Level 1 responses and deadlines, the operator is required to continue quarterly benchmark monitoring for the next four quarters for the parameter(s) that caused the AIM triggering event at all affected discharge points, beginning no later than the next full quarter after compliance. Even if AIM was triggered in the first quarter of the first year of monitoring, EPA requires that the operator comply with AIM Level 1 requirements at that time and continue quarterly monitoring until the next four-quarter average no longer exceeds the benchmark value.

Part 5.2.3.4 AIM Level 1 Status Updates

EPA specifies in this Part the conditions for returning to baseline status and the conditions under which an operator would proceed to the next AIM level. EPA included these conditions in the permit to clarify how an operator can reset the AIM process as well as how advancement to the next level would be determined. While in AIM Level 1 status, the operator may either return to baseline status, or if benchmark exceedances continue, progress to AIM Level 2. The operator's AIM Level 1 status will return to baseline status if the AIM Level 1 responses have been met and the continued quarterly benchmark monitoring results indicate that an AIM triggering event per Part 5.2.2 has not occurred after four quarters of monitoring (i.e., the benchmark threshold is no longer exceeded for the parameter(s)). The operator may discontinue benchmark monitoring for that parameter until monitoring resumes in year 4 of permit coverage per Part 4.2.2.3 or if the operator has fulfilled all benchmark monitoring requirements per Part 4.2.2.3 (i.e., quarterly monitoring is complete for both year 1 and 4 of permit coverage) then it may discontinue monitoring for that parameter for the remainder of permit coverage. The operator's AIM Level 1 status advances to AIM Level 2 status if the operator has completed AIM Level 1 responses and the benchmark threshold continues to be exceeded for the same parameter(s). These status update conditions are the same for each AIM level and do not change from level to level.

Part 5.2.4 AIM Level 2

An operator's AIM Level 1 status changes to AIM Level 2 if the continued quarterly benchmark monitoring results indicate that an AIM triggering event per Part 5.2.2 has occurred (i.e., the benchmark threshold continues to be exceeded for the parameter(s)), unless the operator qualifies for an exception per Part 5.2.6.

Just like in the 2015 MSGP and just as for AIM Level 1, if fewer than four quarterly samples indicate it is mathematically certain that a benchmark would be exceeded prior to collecting all quarterly samples, then the operator must respond accordingly.

AIM Level 2 Examples:
In AIM Level 1 and Next Annual Average Is Over the Benchmark Threshold

Below are example benchmark monitoring results that would trigger AIM Level 2. In these results, AIM Level 2 is triggered **because the operator is in AIM Level 1 and the next annual average exceeds the benchmark threshold** (or an exceedance of the four-quarter average is mathematically certain, i.e., if the sum of quarterly sample results to date is more than four times the benchmark threshold).

Parameter	Benchmark	AIM triggers:
Total Suspended Solids (TSS) (mg/L)	100 mg/L	• A 4-quarter benchmark average = over 101 mg/L • Fewer than four quarterly samples collected, but a single sample or the sum of any sample results exceeds the benchmark threshold by more than four times = over 401 mg/L

<table>
<tr><th rowspan="6">Example 1</th><th colspan="7">First four quarters of monitoring</th></tr>
<tr><th>Samples</th><th>1st Qtr.</th><th>2nd Qtr.</th><th>3rd Qtr.</th><th>4th Qtr.</th><th>Sum to date</th><th>Sample Average</th></tr>
<tr><td>Ex. 1</td><td>105</td><td>120</td><td>100</td><td>95
(Level 1 triggered)</td><td>420</td><td>105</td></tr>
<tr><th colspan="7">Continued quarterly monitoring while in AIM Level 1</th></tr>
<tr><th>Samples</th><th>1st Qtr.</th><th>2nd Qtr.</th><th>3rd Qtr.</th><th>4th Qtr.</th><th>Sum to date</th><th>Sample Average</th></tr>
<tr><td>Ex. 1</td><td>115</td><td>100</td><td>90</td><td>135
(Level 2 triggered)</td><td>440</td><td>110</td></tr>
</table>

<table>
<tr><th rowspan="7">Example 2</th><th colspan="7"></th></tr>
<tr><th colspan="7">First four quarters of monitoring</th></tr>
<tr><th>Samples</th><th>1st Qtr.</th><th>2nd Qtr.</th><th>3rd Qtr.</th><th>4th Qtr.</th><th>Sum to date</th><th>Sample Average</th></tr>
<tr><td>Ex. 2</td><td>300</td><td>110
(Level 1 triggered)</td><td>*</td><td>*</td><td>410</td><td>Over 101</td></tr>
<tr><th colspan="7">Continued quarterly monitoring while in AIM Level 1</th></tr>
<tr><th>Samples</th><th>1st Qtr.</th><th>2nd Qtr.</th><th>3rd Qtr.</th><th>4th Qtr.</th><th>Sum to date</th><th>Sample Average</th></tr>
<tr><td>Ex. 2</td><td>150</td><td>270
(Level 2 triggered)</td><td>**</td><td>**</td><td>420</td><td>Over 101</td></tr>
</table>

In Example 1, AIM Level 1 is triggered in the 4th quarter of the first four quarters of monitoring because after 4 samples, the annual average (105 + 120 + 100 + 95 = 420/4 = 105 mg/L) is above the benchmark threshold (100 mg/L). Once AIM Level 1 responses and deadlines are met, quarterly benchmark monitoring must continue for the next four quarters. While in AIM Level 1, a triggering event occurs again in the 4th quarter because after another 4 quarterly samples, the annual average (115 + 100 + 90 + 135 = 440/4 = 110 mg/L) is again above the benchmark threshold (100 mg/L). AIM Level 2 responses must be completed within 14 days of receipt of laboratory results and quarterly benchmark monitoring must continue for the next four quarters.

In Example 2, AIM Level 1 is triggered in the 2nd quarter of the first four quarters of monitoring because the 1st and 2nd quarter results (300 mg/L and 110 mg/L) mean an exceedance of the four-quarter average of the benchmark threshold (100 mg/L) is mathematically certain, even if the 3rd and 4th quarter sampling results denoted by a * were 0 (300 + 110 + 0 + 0 = 410/4 = 102.5 mg/L). Once AIM Level 1 responses and deadlines are met, quarterly benchmark monitoring must continue for the next four quarters. While in AIM Level 1, a triggering event occurs in the 2nd quarter because, again, the 1st and 2nd quarter results (150 mg/L and 270 mg/L) mean an exceedance of the four-quarter average is mathematically certain, even if the 3rd and 4th quarter sampling results denoted by a ** were 0 (150 + 270 + 0 + 0 = 420/4 = 105 mg/L). AIM Level 2 responses must be completed within 14 days of receipt of laboratory results in the 2nd quarter and quarterly benchmark monitoring would continue for at least the next four quarters.

Part 5.2.4.1 AIM Level 2 Responses

Exceedances of AIM Level 2 magnitude warrant additional action. Therefore, after Level 2 is triggered, the Level 2 response requires the operator to implement additional pollution prevention/good housekeeping SCMs. EPA encourages facilities to consult the existing MSGP industrial stormwater sector-specific fact sheets for guidance on recommended SCMs appropriate to comply with AIM Level 2. Compliance with AIM Level 2 does not require the operator to implement *all* feasible SCMs from an appropriate sector-specific fact sheet, as contemplated in the proposal (previously, all fact sheets were compiled and named Appendix Q in the proposed permit). EPA received many comments on Appendix Q related to the relevancy of certain practices identified in the revised fact sheets. For example, one commenter indicated that the control measure “determine whether excessive application of deicing chemicals occurs and adjust as necessary” may potentially conflict with Federal Aviation Administration requirements and that other identified practices for Sector S (Air Transportation Facilities) were outdated and ineffective at airports. Some commenters also suggested that Appendix Q be converted to recommendations as guidance rather than contained in the permit itself. In light of the volume of comments, EPA retained the existing 2015 sector-specific fact sheet guidance for the 2021 MSGP to provide recommended controls and, over the course of the 2021 MSGP permit term, will work with external stakeholders to thoroughly review and revise, as needed, the checklists for future use.

To lower pollutant levels below benchmarks and better protect water quality, EPA requires operators to select those pollution prevention/good housekeeping SCMs best suited for their site-specific conditions, sources, and pollutants (if not already implemented) and to note those SCMs implemented per Part 5.3. This helps ensure that SCM selections are made with rigor and completeness, resulting in an effective SWPPP.

Part 5.2.4.2 AIM Level 2 Deadlines

The operator is required to select and implement additional pollution prevention/good housekeeping SCMs to comply with Level 2 within 14 days of receipt of laboratory results that indicate an AIM triggering event has occurred and document per Part 5.3 how the measures will achieve benchmark thresholds. If it is infeasible for the operator to implement a measure within 14 days, the operator may take up to 45 days to implement such measures, but must document per Part 5.3 why it was infeasible to do so within 14 days. EPA may also grant an extension beyond 45 days based on an appropriate demonstration by the operator. While persistent high levels of pollutants should be mitigated as soon as possible, EPA acknowledges that operators may need more time for actions such as planning and designing their SCMs. After full implementation of selected SCMs, an operator must commence another cycle of quarterly benchmark monitoring for the next four quarters for all affected discharge points.

Part 5.2.4.3 Continued Quarterly Benchmark Monitoring

After compliance with AIM Level 2 responses and deadlines, the operator is required to continue quarterly benchmark monitoring for the next four quarters for the parameter(s) that caused the AIM triggering event at all affected discharge points, beginning no later than the next full quarter after compliance, as in Level 1.

Part 5.2.4.4 AIM Level 2 Status Updates

Just as in AIM Level 1, EPA specifies in this Part the conditions for returning to baseline status from Level 2 status, and the conditions under which an operator would proceed to AIM Level 3 status, if appropriate.

Part 5.2.5 AIM Level 3

An operator's AIM Level 2 status changes to AIM Level 3 if the continued quarterly benchmark monitoring results indicate that an AIM triggering event per Part 5.2.2 has occurred (i.e., the benchmark threshold continues to be exceeded for the parameter(s)), unless the operator qualifies for an exception per Part 5.2.6.

AIM Level 3 Example:
In AIM Level 2 and Next Annual Average Is Over the Benchmark Threshold

Below are example benchmark monitoring results that would trigger AIM Level 3. In these results, AIM Level 3 is triggered **because <u>the operator is in AIM Level 2 and the next annual average</u> exceeds the benchmark threshold** (or an exceedance of the four-quarter average is mathematically certain, i.e., if the sum of quarterly sample results to date is more than four times the benchmark threshold).

Parameter	Benchmark	AIM triggers:
Total Suspended Solids (TSS) (mg/L)	100 mg/L	• A 4-quarter benchmark average = over 101 mg/L • Fewer than four quarterly samples collected, but a single sample or the sum of any sample results exceeds the benchmark threshold by more than four times = over 401 mg/L

Example 1	First four quarters of monitoring						
	Samples	**1st Qtr.**	**2nd Qtr.**	**3rd Qtr.**	**4th Qtr.**	**Sum to date**	**Sample Average**
	Ex. 1	105	120	100	95 (Level 1 triggered)	420	105
	Continued quarterly monitoring while in AIM Level 1						
	Samples	**1st Qtr.**	**2nd Qtr.**	**3rd Qtr.**	**4th Qtr.**	**Sum to date**	**Sample Average**
	Ex. 1	115	100	90	135 (Level 2 triggered)	440	110
	Continued quarterly monitoring while in AIM Level 2						
	Samples	**1st Qtr.**	**2nd Qtr.**	**3rd Qtr.**	**4th Qtr.**	**Sum to date**	**Sample Average**
	Ex. 1	85	150	105	120 (Level 3 triggered)	460	115

Example 2	First four quarters of monitoring						
	Samples	**1st Qtr.**	**2nd Qtr.**	**3rd Qtr.**	**4th Qtr.**	**Sum to date**	**Sample Average**
	Ex. 2	300	110 (Level 1 triggered)	*	*	410	Over 101
	Continued quarterly monitoring while in AIM Level 1						
	Samples	**1st Qtr.**	**2nd Qtr.**	**3rd Qtr.**	**4th Qtr.**	**Sum to date**	**Sample Average**
	Ex. 2	150	270 (Level 2 triggered)	**	**	420	Over 101
	Continued quarterly monitoring while in AIM Level 2						
	Samples	**1st Qtr.**	**2nd Qtr.**	**3rd Qtr.**	**4th Qtr.**	**Sum to date**	**Sample Average**
	Ex. 2	200	240 (Level 3 triggered)	***	***	440	Over 101

In Example 1, AIM Level 1 is triggered in the 4th quarter of the first four quarters of monitoring because after 4 samples, the annual average (105 + 120 + 100 + 95 = 420/4 = 105 mg/L) is above the benchmark threshold (100 mg/L). Once AIM Level 1 responses and deadlines are met, quarterly benchmark monitoring must continue for the next four quarters. While in AIM Level 1, a triggering event occurs again in the 4th quarter because after another 4 quarterly samples, the annual average (115 + 100 + 90 + 135 = 440/4 = 110 mg/L) is again above the benchmark threshold (100 mg/L). AIM Level 2 responses must be completed within 14 days of receipt of laboratory results and quarterly benchmark monitoring must continue for at least the next four quarters. While in AIM Level 2, a triggering event occurs again in the 4th quarter because after another 4 samples, the annual average (85 + 150 + 105 + 120 = 460/4 = 115 mg/L) is again above the benchmark threshold (100 mg/L). AIM Level 3 responses must be completed within the required deadlines of receipt of laboratory results and quarterly benchmark monitoring must continue for at least the next four quarters.

In Example 2, AIM Level 1 is triggered in the 2nd quarter of the first four quarters of monitoring because the 1st and 2nd quarter results (300 mg/L and 110 mg/L) mean an exceedance of the four-quarter average of the benchmark threshold (100 mg/L) is mathematically certain, even if the 3rd and 4th quarter sampling results denoted by a * were 0 (300 + 110 + 0 + 0 = 410/4 = 102.5 mg/L). Once AIM Level 1 responses and deadlines are met, quarterly benchmark monitoring must continue for the next four quarters. While in AIM Level 1, a triggering event occurs in the 2nd quarter because, again, the 1st and 2nd quarter results (150 mg/L and 270 mg/L) mean an exceedance of the four-quarter average is mathematically certain, even if the 3rd and 4th quarter sampling results denoted by a ** were 0 (150 + 270 + 0 + 0 = 420/4 = 105 mg/L). AIM Level 2 responses must be completed within 14 days of receipt of laboratory results in the 2nd quarter and quarterly benchmark monitoring must continue for at least the next four quarters. While in AIM Level 2, a triggering event occurs in the 2nd quarter because, again, the 1st and 2nd quarter results (200 mg/L and 240 mg/L) mean an exceedance of the four-quarter average is mathematically certain even if the 3rd and 4th quarter sampling results denoted by a *** were 0 (200 + 240 + 0 + 0 = 440/4 = 110 mg/L). AIM Level 3 responses must be completed within the required deadlines of receipt of laboratory results and quarterly benchmark monitoring must continue for at least the next four quarters.

Part 5.2.5.1 AIM Level 3 Responses

The AIM Level 3 response requires an operator to implement one or more permanent, structural or treatment train technologies appropriate for the exceeded pollutants. Treatment removes pollutants from effluent rather than the more prevalent stormwater approach of pollution prevention. Structural controls could include building structures to prevent stormwater from being discharged. Treatment and structural controls are not required until AIM Level 3 due to the complexity and cost to the operator and are mandated only when earlier attempts to lower pollutants via pollution prevention/good housekeeping and other procedural changes fail to do so in AIM Levels 1 and 2. EPA expects that few operators will advance to AIM Level 3 after completing AIM Levels 1 and 2.

Part 5.2.5.2 AIM Level 3 Deadlines

In the 2021 MSGP, EPA is allowing additional time for operators to identify and install structural source and/or treatment control measures under AIM Level 3. AIM Level 3 requires that operators must identify the schedule for installing the appropriate structural source and/or treatment control measures within 14 days and install the identified measures within 60 days of the Level 3 triggering event. If is not feasible within 60 days, the operator may take up to 90 days to install such measures, documenting per Part 5.3 why it is infeasible to install the measure within 60 days. EPA may also grant an extension beyond 90 days based on an appropriate demonstration by the operator.

Part 5.2.5.3 Continued Quarterly Benchmark Monitoring

After compliance with AIM Level 3 responses and deadlines, the operator is required to continue quarterly benchmark monitoring for the next four quarters for the parameter(s) that caused the AIM triggering event at all affected discharge points, beginning no later than the next full quarter after compliance, as in AIM Levels 1 and 2.

Part 5.2.5.4 AIM Level 3 Status Updates

Just as in AIM Levels 1 and 2, EPA specifies in this Part the conditions for returning to baseline status from Level 3 status, and the conditions under which an operator would remain in AIM Level 3 status. If after AIM Level 3 compliance, the operator continues to exceed the benchmark threshold for the same parameter, EPA may require the operator to apply for an individual permit. At this stage, circumstances at the facility could indicate that the discharge is no longer appropriately controlled under the general permit (40 C.F.R. 122.28(b)(3)(E)). More site-specific requirements tailored to address the facility's stormwater discharges under an individual permit may be appropriate if benchmark exceedances continue to occur despite implementation of standard SCMs required to comply with this general permit.

Part 5.2.6 AIM Exceptions

This Part of the 2021 MSGP includes five exceptions that could allow an operator to be relieved of compliance with AIM requirements and continued benchmark monitoring at any AIM level. Two exceptions are carry-overs from the 2015 MSGP: one being that the exceedance was caused by natural background levels of pollutants causing the elevated levels and the other being that the exceedance was caused by run-on from a neighboring source which elevates the operator's pollutant levels, which requires EPA approval before the operator can qualify for this exception. Three additional exceptions are included in the 2021 MSGP as well: one being that the exceedance was an abnormal event; one for discharges of copper and aluminum using facility-specific criteria; and the other that the exceedance does not result in any exceedance of water quality standards. EPA notes that these exceptions are not available for effluent limitation monitoring (Part 4.2.3). Details on each exception are discussed below.

The 2021 MSGP does not include an exception for feasibility, such as one found in the 2015 MSGP (i.e., no further pollutant reductions are technologically available and economically practicable and achievable in light of best industry practice). This exception to AIM is inappropriate in the 2021 MSGP for several reasons. Feasibility considerations are not relevant at AIM Level 1 because the operator can self-determine that no additional measures are warranted, as well as AIM Level 2 where the operate can select pollution prevention/house-keeping measures they deem appropriate. At AIM Level 3, repeated benchmark exceedances have occurred to a point at which implementation of permanent stormwater control measures is warranted. Industrial stormwater discharges are explicitly required to meet all provisions of CWA §301, including applicable water quality standards (CWA §402(p)(3)(A)).

Part 5.2.6.1 Details on AIM Exception due to Natural Background Pollutant Levels

EPA maintains from the 2015 MSGP the option for operators to justify benchmark exceedances based on local natural background concentrations. This Part allows for an exception from AIM requirements and continued benchmark monitoring when natural background levels are solely responsible for the exceedance of a benchmark threshold. This can be determined if (1) natural background pollutant concentrations are greater than the corresponding benchmark threshold, and (2) there is no net facility contribution of the pollutant (i.e., the four-quarter average concentration detected in the discharge from all monitored discharge points minus the average natural concentration of the parameter does not exceed zero). An operator is eligible for the exception provided that all the following conditions are met, and the operator submits an analysis and documentation to the applicable EPA Regional Office upon request:

- The four-quarter average concentration of benchmark monitoring results (or fewer than four-quarters of data that trigger an exceedance) is less than or equal to the concentration of that pollutant in the natural background; and
- The operator documents and maintains with the SWPPP, as required in Part 6.5, the supporting rationale for concluding that benchmark exceedances are in fact attributable solely to natural background pollutant levels. The operator must include in the supporting rationale any data previously collected by the operator or others (including literature studies) that describe the levels of natural background pollutants in the stormwater discharge. Natural background pollutants are those substances that are naturally occurring in soils or groundwater. Natural background pollutants do not include legacy pollutants from earlier activity on your site, or pollutants in run-on from neighboring sources which are not naturally occurring, such as other industrial facilities or roadways.

This natural background exception could apply to parameters such as metals derived from natural mineral deposits and nutrients attributable to background soil, vegetation, or wildlife sources. Natural background levels cannot be attributed to run-on from non-natural sources such as other industrial sites or roadways (however, per Part 5.2.6.2, a facility may be eligible to discontinue monitoring for pollutants that occur solely from run-on sources). If background concentrations are not responsible for the benchmark exceedance, the operator will need to comply with the applicable AIM requirements, per Part 5.2. Operators must use the same sample collection, preservation, and analysis methods for natural background monitoring as required for benchmark monitoring.

If operators experience average benchmark exceedances for one or more pollutants during coverage under the 2021 MSGP or suspect that they might have benchmark exceedances caused entirely by natural background, they can begin monitoring the natural background pollutant concentrations from a non-human impacted reference site concurrently with required benchmark monitoring and compliance with AIM requirements. After monitoring for four quarters and adequately determining that exceedances are the result of pollutants present in the natural background, operators may discontinue AIM responses and additional benchmark sampling if all conditions in Part 5.2.6.2 are met. The following is a list of information the operator must document and maintain with the SWPPP, as required by Part 5 to support a rationale for the natural background exception:

- Map showing the reference site location in relation to facility along with available land cover information;
- Reference site and facility site elevation;
- Available geology and soil information for reference and facility sites;
- Photographs showing reference site vegetation;
- Reference site reconnaissance survey data regarding presence of roads, discharge points, or other human-made structures; and
- Records from relevant state or federal agencies indicating no known mining, forestry, or other human activities upstream of the reference site.

The background concentration of a pollutant in discharges from a non-human impacted reference site in the same watershed should be determined by evaluating ambient monitoring data or by using information from a peer-reviewed publication or a local, state, or federal government publication specific to stormwater in the immediate region. Studies that are in other geographic areas, or are based on clearly different topographies or soils, are not appropriate. When no data are available, and there are no known sources of the pollutant, the background concentration should be assumed to be zero. In cases where historic monitoring data from a site are used for generating a natural background value, and the site is no longer accessible or able to meet reference site acceptability criteria, then there must be documentation (e.g., historic land use maps) that the site met reference site criteria (indicating absence of human activity) during the time data collection occurred.

The justification for this exception must be kept on-site with the facilities’ SWPPP (see Part 6.5) and made available to EPA upon request. EPA may review the operator’s determinations that a benchmark exceedance is based solely on natural background concentrations and disallow the exception if the Agency finds the documentation inadequate. Operators that have previously made a determination that benchmark exceedances are attributable solely to the presence of that pollutant in the natural background may be able to rely on a previous analysis and rationale for waiving compliance with AIM requirements and discontinuing benchmark monitoring under the 2021 MSGP. However, these operators must conduct four quarters of benchmark monitoring in the first year of permit coverage under the 2021 MSGP and the results must continue to show that the average concentration of pollutants in the facility’s discharge are less than or equal to the concentration of that pollutant in the natural background. In such circumstances, there is no ongoing burden to comply with AIM requirements or to expend additional resources in justifying the rationale for meeting this exception, and benchmark monitoring can be discontinued for the duration of the permit.

EPA is maintaining the 2015 MSGP’s method for determining natural background pollutant concentrations in relation to this exception. Under the proposed MSGP, EPA had contemplated changing the threshold for the natural background exception for benchmark exceedances from the 2015 MSGP threshold. The approach used in the 2015 MSGP (as well as the preceding 2008 MSGP) required the average concentration of the benchmark monitoring results to be at or below natural background levels to qualify for the exception. By comparison, under the proposed method in the proposed 2020 MSGP, the operator would qualify for the exception if the four-quarter average concentration of the benchmark monitoring results minus the concentration of that pollutant in the natural background is less than or equal to the benchmark threshold. Essentially, but for the natural background contribution, the operator's discharge would meet the benchmark threshold. The difference between the two approaches is that in the proposed method, an operator could subtract from the benchmark results from the value attributable to natural background.

EPA contemplated this revised subtraction method based on previous stakeholder feedback that the 2015 MSGP standard for the exception was burdensome because it required the operator to demonstrate no net facility contributions, meaning the four-quarter average concentration detected in discharges from all monitored discharge points minus the average natural concentration of the parameter could not exceed zero. However, EPA did retain in the proposal that the exception is allowed only when "the benchmark exceedance is *solely attributable* to the presence of that pollutant in natural background sources," because the burden on the operator to meet the exception is outweighed by the potential effect on water quality from uncontrolled pollutant contributions.

After further consideration of the rationale behind the 2015 MSGP's (and 2008 MSGP's) approach and review of public comments, which both supported and opposed the newly proposed subtraction method, EPA is retaining the 2015 MSGP approach to applying the natural background exception for several reasons.

First, the 2015 MSGP approach is consistent with existing EPA policy concerning the establishment of site-specific water quality criteria based on natural background conditions. See EPA's Office of Science and Technology memorandum, Establishing Site Specific Aquatic Life Criteria Equal to Natural Background (November 5, 1997). The policy states that aquatic life criteria should be equal to natural background, defined as background concentration due only to non-anthropogenic sources, i.e., non-manmade sources. Upon reconsideration of the proposed 2020 MSGP approach, which would have enabled the facility to subtract out the amount of the pollutant attributable to natural background from the pollutant levels found in the benchmark sample, EPA found that it would be inconsistent with the "solely attributable" standard EPA intends to maintain in the MSGP and the longstanding EPA policy referenced above. Since many of EPA's benchmark thresholds are based on aquatic life criteria (see 60 Fed. Reg. 50,804, 50,825 (Sept. 29, 1995)), the principles discussed in this policy are appropriate to uphold when establishing a natural background exception for benchmark exceedances.

Additionally, as stated in EPA's response to comment document for the 2015 MSGP, "EPA's long-standing position, consistent with the CWA and EPA's permitting regulations, is that operators are responsible for the quality of their discharges, regardless of what may be added as a result of run-on from other sources or legacy/anthropomorphic sources of pollutants." Additionally, the 2015 MSGP response to comments stated that "the CWA does not allow EPA or states to set a site-specific criteria equal to the natural background plus an otherwise protective level … since doing so could raise the level of the pollutant in the water body that might [be] above the natural background, which would not be protective of aquatic life, at a minimum." See *Natural Background Exception to Benchmark Monitoring* (p. 5-6) in Response to Public Comments – EPA NPDES 2015 Multi-Sector General Permit (MSGP), June 4, 2015. EPA maintains that this principle applies to benchmark monitoring and Additional Implementation Measures.

Public comments also raised a variety of concerns to EPA that the proposed subtraction method is counter to the “solely attributable” standard and is not appropriate for the MSGP. Commenters pointed out that the proposed subtraction method does not limit the exception to situations where benchmark exceedances are “solely attributable” to natural background sources, but rather it flipped the standard to excuse an exceedance if it was solely attributable to the operator’s discharges, substantially weakening the effectiveness of the benchmark monitoring requirements. Commenters also noted that the subtraction method does not account for the proportion of flow due to natural background sources in the discharge and assumes that the natural background flows are equal to the stormwater discharge flows, meaning the proposed exception would allow operators to contribute pollutants in amounts greater than the benchmark and could cause or contribute to water quality impairments. The proposed subtraction method essentially would allow operators to contribute higher concentrations to receiving waters than previously allowed without triggering AIM. This is not EPA’s intention with this exception.

Additionally, as EPA expects that more operators would have qualified for the exception under the proposed subtraction method and been excused of from controlling their pollutant contributions to their benchmark exceedances, the Agency must prioritize reducing the cumulative and compounding effect on water quality in its decision to not revise the exception and maintain the 2015 MSGP standard in the 2021 MSGP.

Part 5.2.6.2 Details on AIM Exception due to Run-On

This operator is not required to comply with AIM responses or continued benchmark monitoring for any parameters for which it can demonstrate and obtain EPA agreement that run-on from a neighboring source (i.e., a source external to the facility) is the cause of the exceedance, provided that all the following conditions are met and the operator submits its analysis and documentation to the applicable EPA Regional Office for concurrence:

- After reviewing and revising the SWPPP, as appropriate, the operator must notify the other facility or entity contributing run-on to the discharges and request that they abate their pollutant contribution.
- If the other facility or entity fails to take action to address their discharges or sources of pollutants, the operator must contact the applicable EPA Regional Office.

Part 5.2.6.3 Details on AIM Exception due to an Abnormal Event

The operator is not required to comply with AIM responses or continued benchmark monitoring for any parameters for which it immediately documents per Part 5.3 that the single event causing the exceedance was an abnormal event, a description explaining what caused the abnormal event, how any control measures taken within 14 days of such event will prevent a reoccurrence of the exceedance, and the operator takes a sample during the next qualifying precipitation event that is less than the benchmark threshold, in which case the operator does not trigger any AIM requirements based on the abnormal event. This new sample is the sample that should be reported in Net-DMR and used to calculate your annual average.

The operator may avail itself of the "abnormal" demonstration exception at any AIM Level, but only one time per parameter, per discharge point, which shall include substantially identical discharge points (SIDPs), for the duration of their permit coverage, provided the operator qualifies for the exception. EPA expects that the operator will ensure the abnormal event for the parameter does not occur repeatedly given that the nature of the event is atypical of the discharge quality. EPA also requires the operator to explain what caused the abnormal event as part of the documentation for this exception.

Part 5.2.6.4 For Aluminum and Copper benchmark parameters only: Details on AIM Exception due to demonstration that benchmark exceedance does not result in an exceedance of a facility-specific value using the national recommended water quality criteria in-lieu of the applicable MSGP benchmark threshold.

To be eligible for the exception, the operator must demonstrate to EPA that their discharge(s) that exceeded the applicable nationally representative MSGP benchmark threshold would not result in an exceedance of a derived facility-specific value. The demonstration to EPA, which will be made publicly available, must meet the minimum elements below in order to be considered for and approved by the applicable EPA Regional Office. Operators that exceed the MSGP benchmark for aluminum or copper must still comply with any AIM requirements and additional benchmark monitoring until the demonstration is made to and approved by the applicable EPA Regional Office. In this case, EPA suggests that samples collected for any continued benchmark monitoring also be analyzed for the required input parameters for each model for efficiency. For existing operators that anticipate an exceedance of the MSGP benchmark(s) based on previous monitoring data and expect to utilize this exception(s), EPA recommends those operators begin the required data collection in their first year of permit coverage.

Aluminum:

- Conditions of this exception include:
  - Use of EPA’s 2018 National Recommended Aluminum Aquatic Life Criteria: https://www.epa.gov/wqc/aquatic-life-criteria-aluminum;
  - In-stream waterbody sampling for the three water quality input parameters for the recommended criteria model: pH, total hardness, and dissolved organic carbon (DOC);
  - Completion of sampling events sufficient to capture spatial and temporal variability. Sampling events must adequately represent each applicable season at the facility’s location, which would likely be over the course of at least one year. An equal number of ambient waterbody samples must be collected at a single upstream and downstream location from the operator’s discharge point(s) to the receiving water of the United States. Where there exists no ambient source water upstream of the operator’s discharge point(s) to the receiving water of the United States, samples of the ambient downstream waterbody conditions are sufficient.
- The demonstration provided to EPA must include, at minimum:
  - A description of the sampling, analysis, and quality assurance procedures that were followed for data collection, following the guidance in Section 3 of EPA’s Industrial Stormwater Monitoring and Sampling Guide. https://www.epa.gov/sites/production/files/2015-11/documents/msgp_monitoring_guide.pdf;
  - The input parameters and export of results from the Aluminum Criteria Calculator, available at: https://www.epa.gov/sites/production/files/2018-12/aluminum-criteria-calculator-v20.xlsm; and,
  - A narrative summary of results.

Copper (only for discharges to freshwater):

- Conditions for this exception are:
    - Use of EPA's 2007 National Recommended Freshwater Copper Aquatic Life Criteria: https://www.epa.gov/wqc/aquatic-life-criteria-copper ;
    - In-stream waterbody sampling for the 10 water quality input parameters to the BLM for copper: pH; dissolved organic carbon (DOC); alkalinity; temperature; major cations (calcium, magnesium, sodium, and potassium); and major anions (sulfate, chloride);
    - The water quality input parameters, with the exception of temperature, must fall within the range of conditions recommended for use in the BLM, found in Table 1-1 of the Data Requirements document: https://www.epa.gov/sites/production/files/2015-11/documents/copper-data-requirements-training.pdf; and
    - Completion of sampling events sufficient to capture spatial and temporal variability. Because some of the BLM input parameters are known to vary seasonally, EPA suggests a possible starting point of at least one sampling event per season.[8] Sampling events must adequately represent each applicable season at the facility's location, which would likely be over the course of at least one year. An equal number of ambient waterbody samples must be collected at a single upstream and downstream location from the operator's discharge point(s) to the receiving water of the United States. Where there exists no ambient source water upstream of the operator's discharge point(s) to the receiving water of the United States, samples of the ambient downstream waterbody conditions are sufficient. This is the minimum number of samples to adequately characterize the spatial and temporal variability of the site.
- The demonstration provided to EPA must include, at minimum:
    - A description of the sampling, analysis, and quality assurance procedures that were followed for data collection, following the guidance in Section 3 of EPA's Industrial Stormwater Monitoring and Sampling Guide. https://www.epa.gov/sites/production/files/2015-11/documents/msgp_monitoring_guide.pdf;
    - A discussion of how the data collected reflects the site-specific characteristics and how the operator considered special circumstances that may affect copper toxicity throughout the expected range of receiving water conditions;
    - The input file and export of the results from the BLM software, which can be requested at: https://www.epa.gov/wqs-tech/copper-biotic-ligand-model;

---

[8] EPA training materials on Copper BLM for Data Requirements states that spatial variability in the BLM input parameters caused by physical factors such as watershed size or the presence or absence of a point source discharge(s) to a waterbody should also be considered when determining how many sampling events should be collected when using the BLM to develop site-specific copper criteria. Spatial variability in the BLM input parameters should also be considered when determining how many sampling locations should be selected for development of site-specific copper criteria using the BLM. Regardless of the number of sampling events involved, data collection should reflect site-specific characteristics and consider special circumstances that may affect copper toxicity throughout the expected range of receiving water conditions. See https://www.epa.gov/sites/production/files/2015-11/documents/copper-data-requirements-training.pdf.

and,

- A narrative summary of results.

Part 5.2.6.5 Details on AIM Exception due to demonstration that benchmark exceedance does not result in any exceedance of water quality standards:

The operator is not required to comply with AIM requirements or continued benchmark monitoring for any parameters for which it has acquired sufficient data and generates an analysis that demonstrates that its discharges do not and will not result in any exceedance of a water quality standard. EPA notes that this exception is available to all AIM levels, but a robust analysis must be completed and submitted to EPA before qualifying for the exception.

The demonstration to EPA, which will be made publicly available, must be made within 30 days of the AIM triggering event. If it is not feasible to complete this demonstration within 30 days, the operator may take up to 90 days, documenting in the SWPPP why it is infeasible to complete the demonstration within 30 days. EPA may also grant an extension beyond 90 days, based on an appropriate demonstration by the operator. The demonstration must include the following minimum elements in order to be considered for approval by EPA and would likely rely upon computer models, such as Storm Water Management Model (SWMM), Distributed Routing Rainfall-Runoff Model (DR3M) and Hydrological Simulation Program-Fortran (HSPF), to make such a case:

1. the water quality standards applicable to the receiving water;
2. the average flow rate of the stormwater discharge;
3. the average instream flow rates of the receiving water immediately upstream (if applicable) and downstream of the discharge point;
4. the ambient concentration of the parameter(s) of concern in the receiving water immediately upstream (if applicable) and downstream of the discharge point demonstrated by full-storm composite sampling;
5. the concentration of the parameter(s) of concern in the stormwater discharge demonstrated by full-storm, flow-weighted composite sampling;
6. any relevant dilution factors applicable to the discharge; and
7. the hardness of the receiving water.

Timeframe of EPA Review of the Submitted Demonstration: EPA will review and either approve or disapprove of such demonstration within 90 days of receipt (EPA may take up to 180 days upon notice to the operator before the 90th day that EPA needs additional time).

- **EPA Approval of the Submitted Demonstration**. If EPA approves such demonstration within this timeframe, the operator has met the requirements for this exception and does not have to comply with the corresponding AIM requirements and continued benchmark monitoring.
- **EPA Disapproval of the Submitted Demonstration.** If EPA disapproves such demonstration within this timeframe, the operator must comply with the corresponding AIM requirements and continued benchmark monitoring, as required. Compliance with the AIM requirements would begin from the date

EPA notifies the operator of the disapproval unless you submit a Notice of Dispute to the applicable EPA Regional Office in Part 7 within 30 days of EPA's disapproval.

- **EPA Does Not Provide Response Related to the Submitted Demonstration**. If EPA does not provide a response on the demonstration within this timeframe, the operator may submit to the applicable EPA Regional Office in Part 7 a Notice of Dispute.
- **Operator Submittal of Notice of Dispute.** The operator may submit all relevant materials, including support for your demonstration and all notices and responses to the Water Division Director for the applicable EPA Region to review within 30 days of EPA's disapproval or after 90 days (or 180 days if EPA has provided notice that it needs more time) of not receiving a response from EPA.
- **EPA Review of Notice of Dispute.** EPA will send the operator a response within 30 days of receipt of the Notice of Dispute. Time for action by the operator upon disapproval shall be tolled during the period from filing of the Notice of Dispute until the decision on the Notice of Dispute is issued by the Water Division Director for the applicable EPA Region.

Part 5.3 Corrective Action and AIM Documentation

For any event described in Parts 5.1, 5.2.3, 5.2.4, or 5.2.5, the operator must document basic information describing the condition that requires corrective action and/or the AIM triggering event, and their response to that event. As described previously, the permit establishes conditions for both immediate and longer response periods. The operator must maintain a copy of this documentation with their SWPPP as well as summarize this information in the Annual Report. These documentation requirements are substantially similar to the 2015 MSGP.

Part 6 Stormwater Pollution Prevention Plan (SWPPP)

This Part requires operators to develop a SWPPP to document the specific control measures they will use to meet the limits contained in Part 2, Part 8 (if applicable), and Part 9 (if applicable), as well as to document compliance with other permit requirements (e.g., monitoring, recordkeeping, reporting). The SWPPP itself does not contain effluent limits; rather, it constitutes a tool to assist operators, inspectors, and other authorities in ensuring and documenting that effluent limits are met. Per Part 6.3, this documentation must be kept up-to-date (e.g., with inspection findings, after stormwater control measures are modified). Failure to develop and maintain a current SWPPP is a recordkeeping violation of the permit, and is separate and distinct from a violation of any of the other substantive requirements in the permit, such as effluent limits, corrective action, inspections, monitoring, reporting, and sector- or state-specific requirements. For the 2021 MSGP, EPA added a clarification in this Part that facilities should consider the SWPPP to be a living document and that keeping the SWPPP up-date-also entails making revisions and improvements to their stormwater management program based on new information and experiences with major storm events.

To be covered under the MSGP, operators must complete a SWPPP prior to submitting an NOI for permit coverage (existing MSGP-permitted facilities must update their existing SWPPP). Doing so helps to ensure that operators have (1) taken steps to identify all sources of pollutant discharges via stormwater; and (2) implemented appropriate measures to control these discharges in advance of authorization to discharge under the new permit.

This Part contains most of the required elements to be documented in the SWPPP; however, sector-specific SWPPP documentation requirements are also included in Part 8 of the permit. Those permit elements that all facilities must document include: 1) the establishment of a stormwater pollution prevention team; 2) a description of the site; 3) a summary of potential pollutant sources; 4) a description of stormwater control measures; 5) monitoring and inspection procedures (including schedules); 6) documentation to support eligibility considerations under other federal laws; and 7) signature requirements.

Note that any discharges not expressly authorized in the MSGP cannot become authorized or shielded from liability under CWA section 402(k) by disclosure to EPA, state, or local authorities after issuance of this permit via any means, including the NOI to be covered by the permit, the SWPPP, during an inspection, etc.

Part 6.1 Person(s) Responsible for Preparing the SWPPP

This Part requires that the operator prepare the SWPPP in accordance with good engineering practices and to industry standards. Examinations of SWPPPs during inspections have found some SWPPPs to be generic and minimal rather than detailed and site-specific.

With respect to the SWPPP preparation standards requirement, the SWPPP may be developed by either the facility/operator itself or a contractor, but it in all cases the person or party that develops the SWPPP must be a “qualified person” as defined in Appendix A, and the SWPPP must be certified per the signature requirements in Part 6.2.7. A “qualified person” is defined in Appendix A as a person “knowledgeable in the principles and practices of industrial stormwater controls and pollution prevention, and who possesses the education and ability to assess conditions at the industrial facility that could impact stormwater quality, and the education and ability to assess the effectiveness of stormwater controls selected and installed to meet the requirements of the permit.” Requiring that the SWPPP be developed by a qualified person and then certified provides accountability and increases the chance that SWPPPs will be available to and followed by facility personnel. Regardless of the SWPPP certification, EPA may still determine after reviewing a SWPPP that it is not in compliance with the requirements of Part 6.2. In this instance, EPA may require the SWPPP to be reviewed, amended as necessary, and certified by a Professional Engineer with the education and experience necessary to prepare an adequate SWPPP. For the mining sectors (G, H and J), the certifier may also be a Professional Geologist. This professional credentials requirement option is for severely and/or persistently deficient SWPPPs. This requirement engenders no additional burden when the permit is fully complied with originally.

Part 6.2 Required Contents of Your SWPPP

The SWPPP must address the specific requirements in this Part. Operators may choose to reference other documents in their SWPPP, as appropriate, rather than recreating the same text in the SWPPP. However, when referencing other documents, operators are responsible for ensuring that their SWPPP and the other documents referenced together contain all the necessary elements to fully address the elements in Part 6.2. In addition, operators must ensure that a copy of the referenced document is in an accessible format that can be made immediately available to facility employees, EPA, a state or tribe, etc., per Part 6.4, such as Spill Prevention, Control and Countermeasure (SPCC) plans. Regardless of whether all required SWPPP components are combined into one document, operators should keep an index that identifies where individual SWPPP components are addressed.

Part 6.2.1 Stormwater Pollution Prevention Team

The operator must identify a qualified individual or team responsible for developing and revising the facility's SWPPP. These persons are responsible for implementing and maintaining the stormwater control measures to meet effluent limits, and taking corrective action and/or AIM responses where necessary. Personnel should be chosen for their expertise in the relevant departments at the facility to ensure that all aspects of facility operations are considered in developing the plan. The SWPPP must clearly describe the responsibilities of each team member to ensure that each aspect of the plan is covered. EPA expects most operators will have more than one individual on the team, except for small facilities with relatively simple plans and/or staff limitations. The permit requires that team members have ready access to any applicable portions of the SWPPP and the permit. Identification of the team in the plan provides notice to facility staff and management (i.e., those responsible for signing and certifying the SWPPP) of the responsibilities of certain key staff for following through on compliance with the permit's conditions and limits.

Part 6.2.2 Site Description

The SWPPP must describe the industrial activities, materials employed, and physical features of the facility that may contribute significant amounts of pollutants in stormwater discharges. The SWPPP must also contain both a general location map of the facility that shows where the facility is in relationship to receiving waters of the United States and other geographical features, plus a more detailed site map that contains information on facility/site characteristics that affect stormwater discharge quality and quantity. For areas of the facility that generate stormwater discharges associated with industrial activity that contain potentially significant quantities of pollutants (i.e., pollutant amounts that could cause a water quality standards exceedance), the map must indicate the probable direction of stormwater flow and the pollutants likely to be in the discharge. Flows with a significant potential to cause soil erosion must be identified. The site map must also include locations of such things as: boundaries and size (in acres) of the property; location and extent of significant structures and impervious surfaces; stormwater control measures; receiving waters; stormwater conveyances, inlets and discharge points; potential pollutant sources; locations of past significant spills or leaks; locations of stormwater monitoring points; municipal separate storm sewer systems and where the stormwater discharge enters to them (if applicable); areas of designated critical habitat for Endangered Species Act (ESA)-listed species (if applicable); and locations of the activities listed in Part 6.2.2.3(m), including locations and sources of run-on to operators' sites (see the permit for a complete list of required items). To improve readability of the map, some detailed information may be kept as an attachment to the site map and pictures may be included, as deemed appropriate. A detailed site description and site map assists operators in identifying issues and setting priorities for the selection, design and implementation of measures taken to meet effluent limits, and in identifying potential changes in materials, materials management practices, or site features. It is also vital for executing proper inspections.

Part 6.2.3 Summary of Potential Pollutant Sources

This Part requires operators to identify in the SWPPP the potential sources of pollutants from industrial activities that could result in contaminated stormwater discharges, unauthorized non-stormwater discharges, and potential sources of authorized non-stormwater discharges. "Stormwater discharges associated with industrial activities" is defined, pursuant to 40 CFR 122.26(b)(14), to include, but not be limited to: stormwater discharges from industrial plant yards; immediate access roads and rail lines used or traveled by carriers of raw materials, manufactured products, waste material, or by-products used or created by the facility; material handling sites; refuse sites; sites used for the application or disposal of process waste waters; sites used for the storage and maintenance of material handling equipment; sites used for residual treatment, storage, or disposal; shipping and receiving areas; manufacturing buildings; storage areas (including tank farms) for raw materials, and intermediate and final products; and areas where industrial activity has taken place in the past and significant materials remain and are exposed to stormwater. The term "material handling activities" is defined in the permit to include storage, loading and unloading, transportation or conveyance of any raw material, intermediate product, final product, by-product or waste product. "Stormwater discharges associated with industrial activities" does not include areas located at a facility separate from the facility's industrial activities, such as office buildings and accompanying parking lots as long as the drainage from the excluded areas is not mixed with stormwater drained from the above described areas. Part 6.2.3 is only applicable to those portions of a facility covered under the permit, but the areas of the facility not covered under the MSGP should be identified and an explanation provided as to why such areas need not be covered.

Note that potential pollution sources include a facility's roof(s) and other surfaces that could accumulate pollutants originating from an industrial process and deposited through the air. Roofs, walls, etc., exposed to emissions from industrial areas can build up such pollutants over dry periods, which can be mobilized during a rain event or in snowmelt, so the operator needs to identify these areas and include them in the SWPPP. Likewise, industrial structures containing materials that could become pollutants discharged in stormwater (e.g., copper cladding on buildings or zinc from galvanized fences) must also be identified as potential pollutant sources.

For each area that may be a pollutant source at the site, operators must describe the following:

Part 6.2.3.1 Activities in the Area

This description must include a list of the industrial activities exposed to stormwater (see the list above), including any co-located industrial activities that may be exposed to stormwater.

Part 6.2.3.2 Pollutants

For each of the industrial activities described above, operators must document the associated pollutants or pollutant constituents (e.g., biochemical oxygen demand, suspended solids). The pollutant list must include all significant materials that have been handled, treated, stored or disposed, and exposed to stormwater in the three years prior to the date the operator prepares or amends their SWPPP. The SWPPP must also include any additional significant materials that may become a pollutant source that the operator plans to use during the permit's term.

EPA defines "significant materials," per 40 CFR 122.26(b)(12) and in Appendix A of the MSGP 2021, as including but not limited to: raw materials; fuels; materials such as solvents, detergents, and plastic pellets; finished materials such as metallic products; raw materials used in food processing or production; hazardous substances designated under section 101(14) of CERCLA; any chemical the operator is required to report pursuant to section 313 of title III of the Superfund Amendments and Reauthorization Act of 1986 (SARA); fertilizers; pesticides; and waste products such as ashes, slag and sludge that have the potential to be released with stormwater discharges.

CERCLA section 101(14) defines "hazardous substance" to include: a) any substance designated pursuant to the CWA section 311(b)(2)(A); b) any element, compound, mixture, solution or substance designated pursuant to section 102 of CERCLA; c) any hazardous waste having the characteristics identified under or listed pursuant to section 3001 of the Resource Conservation and Recovery Act (RCRA); d) any toxic pollutant listed under CWA section 307(a); e) any hazardous air pollutant listed under section 112 of the Clean Air Act; and f) any imminently hazardous chemical substance or mixture with respect to which the Administrator has taken action pursuant to section 7 of the Toxic Substances Control Act. See 40 CFR 302.4 for the list of such hazardous substances.

Part 6.2.3.3 Spills and Leaks

The operator must document in the SWPPP where potential spills and leaks could occur that could contribute pollutants to stormwater discharges, and the corresponding discharge point(s) that could be affected by such spills and leaks. The pollutant list must include all significant materials that have been handled, treated, stored or disposed, and exposed to stormwater in the three years prior to SWPPP preparation or amendment. New owners/operators of existing facilities should try to identify any significant spills or leaks attributable to past owners (within reason). Significant spills include, but are not limited to, releases of oil or hazardous substances in excess of quantities that are reportable under section 311 of the CWA (see 40 CFR 110.10 and 40 CFR 117.21) or section 102 of CERCLA (see 40 CFR 302.4). Note that significant spills may also include releases of materials that are not classified as oil or hazardous substances. The list of significant spills and leaks should include a description of the causes of each spill or leak, the actions taken to respond to each release, and the actions taken to prevent similar spills or leaks in the future. This effort will aid operators in developing spill prevention and response procedures and any additional procedures necessary to fulfill the requirements per Part 2.1.2.4.

As required in Part 5.1.2 of the permit, the operator must document any spills or leaks that occur while covered under the permit. Documenting spills does not relieve operators of any reporting requirements established in 40 CFR 110, 40 CFR 117, and 40 CFR 302, or any other statutory requirements relating to spills or other releases of oils or hazardous substances.

Part 6.2.3.4 Unauthorized Non-Stormwater Discharges Evaluation

This Part requires the operator to evaluate and document unauthorized non-stormwater discharges as part of the SWPPP. The documentation must include: the date of any evaluation; a description of the evaluation criteria used; a list of the discharge points or onsite drainage points that were directly observed during the evaluation; if there are any unauthorized non-stormwater discharges, and, if so, the actions taken and/or control measures used to immediately eliminate those or documentation that shows the facility obtained an individual NPDES wastewater permit; and an explanation of everything done to immediately eliminate the unauthorized discharge per Part 5 corrective actions. EPA also includes added flexibility on the timing if it is infeasible to complete the evaluation within the first year of permit coverage. For example, this flexibility can allow operators with particularly large sites to complete their evaluations within a time frame that may take longer than one year. Operators unable to complete the evaluations within one year must document in the SWPPP why more time is needed and identify the schedule by which they expect to complete the evaluation.

Acceptable test or evaluation techniques include, but are not limited to, dye testing, television surveillance, visual observation of discharge points or other appropriate locations during dry weather, water balance calculations, and analysis of piping and drainage schematics. A combination of these mechanisms may be appropriate to complete a thorough evaluation. In general, smoke tests should not be used for evaluating the discharge of non-stormwater to a municipal separate storm sewer as many sources of non-stormwater typically pass through a trap that may limit the effectiveness of the test. Where the operator discovers unauthorized non-stormwater discharges, the documentation must also include a description of how the facility immediately eliminated those discharges or a documentation showing the facility obtained an individual NPDES wastewater permit for those discharges.

Common unauthorized discharges and common resolutions include: re-routing sanitary wastes (e.g., sinks, drinking fountains, toilets) to sanitary sewer systems; obtaining an appropriate NPDES permit for cooling water or industrial process wastewater discharges; capping or plugging floor drains; and prohibiting practices such as paint brush washing or wash bucket dumping into storm drain inlets.

Where an operator identifies an unauthorized non-stormwater discharge, the operator must document in their SWPPP the location of that discharge and the appropriate control measures implemented to meet limits. In many cases, the same types of control measures for contaminated stormwater would suffice, but the nature and volume of potential pollutants in the non-stormwater discharges must be taken into consideration in selecting control measures.

Part 6.2.3.5 Salt Storage

The operator must identify in the SWPPP any storage piles containing salt, including piles that are only partially comprised of salt, used for deicing or other commercial or industrial purposes.

Part 6.2.3.6 Sampling Data

This Part requires existing MSGP-permitted facilities to summarize in their SWPPP all stormwater discharge sampling data collected during the previous permit term, as appropriate. Such a summary will support the identification of potential pollutants and pollutant sources at a facility and also the selection of source control practices to meet permit limits. The summary must include an adequately descriptive narrative and may also include data table/figures. Narrative summaries only are appropriate where available data is very limited or where data results and findings are otherwise easily and concisely conveyed in a brief paragraph. Summaries utilizing tables or charts are appropriate where more data are available. New dischargers must provide a summary of any available stormwater discharge sampling data that they may have, including the methods used to collect the data and the sample collection location.

Part 6.2.4 Description of Stormwater Control Measures to Meet Technology-Based and Water Quality-Based Effluent Limits

Operators must describe in their SWPPP the location and type of stormwater control measures implemented at their site to achieve each of the effluent limits in Parts 2.1.2, 2.1.3, 2.2, 2.3, 8 (if applicable) and 9 (if applicable), and to address any stormwater run-on that commingles with discharges covered under the permit. The description of the control measures must include the location and type of control implemented, including how the Part 2.1.1 selection and design considerations were followed, and how they address the pollutant sources in Part 6.2.3. EPA updates the example given to match the requirement in Part 2.1.2. The control measures in Part 2.1 marked with asterisks are not required to be elaborated on in the SWPPP beyond the inclusion of the requirement language word-for-word. Further discussion of this relaxed documentation requirement is provided in Part 2.1 Stormwater Control Measures in this Fact Sheet.

Part 6.2.5 Schedules and Procedures

Part 6.2.5.1 Pertaining to Stormwater Control Measures Used to Comply with the Effluent Limits in Part 2

This Part specifies what schedules and operating procedures the operator must document in a SWPPP for the appropriate Part 2 effluent limits. Documenting these activities will help improve facility compliance with the requirements.

Good Housekeeping (see also Part 2.1.2.2). Document the schedule or the convention used for determining when pickup and disposal of waste materials occur, and also a schedule for routine inspections for leaks and conditions of drums, tanks and containers.

Maintenance (see also Part 2.1.2.3). Document the preventative maintenance procedures and schedules, including for regular inspections, testing, maintenance and repair of all stormwater control measures.

Spill Prevention and Response Procedures (see also Part 2.1.2.4). Document the procedures for preventing and responding to spills and leaks, including notification procedures. Document the stormwater control measures for material handling and storage, and the procedures for preventing spills that can contaminate stormwater. Also specify cleanup equipment, procedures and spill logs, as appropriate.

Erosion and Sediment Controls (see also Part 2.1.2.5). Identify any polymers and/or other chemical treatments used and the purpose.

Employee Training (see also Part 2.1.2.8). Document the content of the training and the frequency/schedule of training for employees who have duties in areas of industrial activities subject to this permit along with a log of the dates on which specific employees received training.

Part 6.2.5.2 Pertaining to Inspections and Assessments

This Part requires operators to document in their SWPPP the procedures to be followed for routine facility inspections (Part 3.1) and for quarterly visual assessments (Part 3.2). The SWPPP must include information such as person(s) or position(s) performing the inspections/assessments, the specific items to be covered by the inspections/assessments, and the respective schedules. Operators invoking the exception for inactive and unstaffed sites for quarterly inspections or visual assessments must provide information in the SWPPP to support such a claim.

Part 6.2.5.3 Pertaining to Monitoring

This Part requires operators to document in the SWPPP the specific monitoring requirements and procedures that that they will follow. EPA added indicator monitoring to the list of analytical monitoring addressed in this Part. Operators must include information such as locations where samples are to be collected, person(s) or position(s) responsible for collecting samples, the frequency of sampling and the pollutants to be sampled, sampling protocols, natural background level information, if applicable, and procedures that will be followed to gather storm event data. Requiring this documentation helps ensure that operators know about their monitoring responsibilities and should improve facility compliance with the permit's requirements.

If operators choose to use the substantially identical discharge point (SIDP) exception for quarterly visual assessments (Part 3.2) or for indicator monitoring (Part 4.2.1), benchmark (Part 4.2.2), or impaired waters (Part 4.2.5) monitoring, they are required to describe in their SWPPP the locations of each SIDP, the general industrial activities conducted in the drainage area of each discharge point, the stormwater control measures being implemented for each discharge point, the exposed materials that are likely to be a significant contributor of pollutants to the stormwater discharge, an estimate of the runoff coefficient of the drainage area, and why the discharge points are expected to discharge substantially identical effluents.

Part 6.2.6 Documentation to Support Eligibility Considerations Under Other Federal Laws

Part 6.2.6.1 Documentation Regarding Endangered and Threatened Species and Critical Habitat Protection

This Part requires SWPPP documentation that supports operators' eligibility criterion selected per Part 1.1.4 and Appendix E related to the protection of species federally listed as endangered and threatened, including: whether listed species or critical habitat are found in proximity to the facility; a description of any communication between the operator and the U.S. Fish & Wildlife Service and/or the National Marine Fisheries Service (the Services); results of the listed species screening process; and, if applicable, a description of the measures implemented to protect the listed species or critical habitat. The operator must document this information to ensure it is properly eligible for permit coverage with regard to endangered species and may be separately reviewed by EPA and/or the Services.

Part 6.2.6.2 Documentation Regarding Historic Properties

With respect to the National Historic Preservation Act, the 2021 MSGP SWPPP documentation required for historic properties is the same as in the 2015 MSGP that supports operators' historic properties eligibility determination per Part 1.1.5 and Appendix F, including: results of their historic property screening investigations; whether stormwater discharges would have an effect on a property listed or eligible for listing on the National Register of Historic Properties (NRHP), a summary of any consultation with the State Historic Preservation Officer (SHPO) or Tribal Historic Preservation Officer (THPO); and, if applicable, a description of the measures the operator will implement to avoid or minimize adverse impacts on historic properties. The operator must document this information to ensure it is properly eligible for permit coverage with regard to historic properties and may be separately reviewed by SHPOs/THPOs.

Part 6.2.7 Signature Requirements

This Part requires the operator to sign and date the SWPPP consistent with procedures detailed in Appendix B, Subsection 11 (a standard permit condition for signatory requirements, pursuant to 40 CFR 122.22). Operators may appoint an authorized representative consistent with EPA regulations if they think it is more appropriate for someone else to sign the SWPPP certification, e.g., a member of the stormwater pollution prevention plan team. The signature requirement includes an acknowledgment that there are significant penalties for submitting false information.

Part 6.3 Required SWPPP Modifications

This Part requires that the operator update the SWPPP whenever any of the triggering conditions for corrective action in Part 5.1 occur, or when a review following the triggering conditions in Part 5.1 indicates that changes to an operator's control measures are necessary to meet the effluent limits in the permit. The SWPPP must be signed and dated by an authorized representative each time it is modified. Note that failure to update the SWPPP is a recordkeeping violation, not a violation of an effluent limit. For example, if an operator changes its maintenance procedures, but fails to update its SWPPP to reflect these changes, a recordkeeping violation will result.

Part 6.4 SWPPP Availability

Identical to the 2015 MSGP, this Part requires that a complete and current SWPPP be accessible in any format at the facility and must be immediately available to facility employees; EPA, a state, or tribe; the operator of an MS4 receiving discharges from the site; and representatives of the Services at the time of a site inspection. In addition, as described below, operators must make available either their SWPPP or certain information from their SWPPP to the public (except for any confidential business information (CBI) or restricted information [as defined in Appendix A]).

Enhanced transparency and public accessibility of required NPDES documentation are Agency priorities and will better enable the goals and requirements of the CWA to be met. Timely, complete, and accurate information regarding potential pollutant sources, the types and concentration of receiving water pollution, stormwater control measures implemented, etc., are vital for protecting water quality and can provide a powerful incentive to improve compliance and performance. Operators who object to making SWPPP information publicly available may instead apply for an individual NPDES permit.

Part 6.4.1 Making a SWPPP Publicly Available

The permit provides three options for meeting the requirement to make the operator’s SWPPP or SWPPP information publicly available. Part 6.4.1.1 details the option to attach the SWPPP to the NOI. Part 6.4.1.2 details the option to provide a URL of the operator’s SWPPP location on their NOI form. Part 6.4.1.3 details the option to provide SWPPP information on the NOI form. Operators using this option must post their SWPPP on their own website or on an associated website, i.e., a relevant and easily discerned website such as a corporate or government website, where the facility submitting the SWPPP is identified on the homepage and facility information is presented on and easily accessed at that website. Operators must post an updated SWPPP at least once a year no later than 45 days after conducting the final routine facility inspection for the year required in Part 3.1.

After an NOI is submitted, the URL would be accessible via EPA’s Integrated Compliance Information System (ICIS) and Enforcement and Compliance History Online (ECHO) System. Although CBI and restricted information may be withheld from the public, such information may not be withheld from EPA or the Services.

Part 6.4.1.1 Attaching the SWPPP to the NOI

Unlike for the 2015 MSGP, operators now have the option to attach a copy of their SWPPPs, and any SWPPP modifications, records, and other reporting elements that must be kept with the SWPPP to their NOIs in NeT-MSGP. This new flexibility provides operators with a time-saving option to easily upload SWPPPs and other documents that must be kept with the SWPPP.

Part 6.4.1.2 Providing a URL of the SWPPP in the NOI

Operators who post their SWPPP on the internet may include the URL location in the NOI in NeT-MSGP and maintain the current SWPPP at this URL. Operators must post any SWPPP modifications, records, and other reporting elements that must be kept with the SWPPP required for the previous year at the same URL as the main body of the SWPPP.

Part 6.4.1.3 Providing SWPPP Information in the NOI Form

This Part provides the third option for meeting the requirement for operators to make their SWPPP or SWPPP information publicly available. For those facilities with SWPPPs not in a format that lends themselves to being put online or that lack a website to host it, salient SWPPP information can be extracted or summarized and input into the NOI in NeT-MSGP. Although not as complete as an entire SWPPP, the information required, such as the control measures and control measures implemented to comply with the non-numeric technology-based effluent limits required in Part 2.1.2, will be sufficient for stakeholders to be aware of what a facility is doing to protect local resources and comply with permit provisions. Operators must post an updated SWPPP at least once a year no later than 45 days after conducting the final routine facility inspection for the year required in Part 3.1.

Part 6.5 Additional Documentation Requirements

This Part includes a list of documents, findings, activities and information that the operator must keep with the SWPPP. EPA requires documentation of various implementation activities, such as reports of routine facility inspections and descriptions of corrective actions and/or AIM responses, after facilities are authorized to discharge. This documentation is useful both for facility personnel and EPA (and other agencies') inspectors to assess overall performance of the control measures selected to meet the technology-based and water quality-based effluent limits in the permit.

Part 7 Reporting and Recordkeeping

Part 7.1 Electronic Reporting Requirement

Operators must comply with a number of different reporting requirements described throughout the 2021 MSGP. Part 7.1 requires all operators to submit all NOIs, NOTs, NECs, Annual Reports, and Discharge Monitoring Reports DMRs electronically, unless the EPA Regional Office has granted them a waiver. Waivers may only be granted on a case-by-case basis and must be based on one of the following conditions: (1) If the operator's headquarters is physically located in a geographic area (i.e., zip code or census tract) that is identified as under-served for broadband Internet access in the most recent report from the Federal Communications Commission; or (2) If the operator has significant issues regarding available computer access or computer capability. This requirement is consistent with EPA's NPDES Electronic Reporting Rule (80 FR 64063).

Part 7.2 Submitting Information to EPA

Part 7.2 includes a summary of all of the required information that the operator must submit to EPA. Operators must submit NOIs, Change NOIs, NECs, NOTs, and Annual Reports via EPA's electronic NPDES eReporting tool (NeT), unless the permit states otherwise or unless granted a waiver per Part 7.1. Operators must also submit the following information to the applicable EPA Regional Office (see Part 7.9 for addresses): New Dischargers and New Sources to Water Qualtiy-Impaired Waters (see Part 1.1.6.2); Exceedance Report for Numeric Effluent Limitations (see Part 7.6); and Additional Reporting (see Part 7.7).

Part 7.3 Reporting Monitoring Data to EPA

The purpose of submitting monitoring data to EPA is to document stormwater quality and identify potential water quality concerns to EPA, states, and stakeholders. Monitoring requirements (i.e., parameters required to be monitored and sample frequency) will be prepopulated on a facility's electronic DMR forms based on the information reported on the NOI form (through the NeT system). Accordingly, operators must report certain changes in monitoring frequency to EPA through the submittal of a "Change NOI" form in NeT. These monitoring changes include:

- All benchmark monitoring requirements have been fulfilled for the permit term;
- All impaired waters monitoring requirements have been fulfilled for the permit term;
- Benchmark and/or impaired monitoring requirements no longer apply because the facility is inactive and unstaffed;
- Benchmark and/or impaired monitoring requirements now apply because the facility has changed from inactive and unstaffed to active and staffed;
- For Sector G2 only: Discharges from waste rock and overburden piles have exceeded benchmark values;
- A numeric effluent limitation guideline has been exceeded;
- A numeric effluent limitation guideline exceedance no longer occurs.

Once monitoring requirements have been completely fulfilled, operators are no longer required to report monitoring results using EPA's electronic DMR reporting tool.

For both indicator monitoring and benchmark monitoring, EPA notes that sampling results must be submitted to EPA no later than 30 days after receiving laboratory results for each monitoring period that samples are required to be collected per Part 4.2.2.2. For any of monitored discharge points that did not have a discharge within the reporting period, operators must report using Net-DMR reporting tool that there was no discharge for that discharge point no later than 30 days after the end of the reporting period.

Part 7.4 Annual Report

In the 2021 MSGP, EPA is retaining the requirement to submit via NeT-MSGP an Annual Report. This provision, along with SWPPP information being made accessible, will provide citizens and other stakeholders with more information about activities and discharges that could affect their receiving waters. The Annual Report must include a summary of the routine site inspection and visual assessment findings, corrective action and AIM responses documentation, and any noncompliance observed. Operators must submit Annual Reports (unless the applicable EPA Regional office has granted a waiver from electronic reporting) by January 30th for each year of permit coverage.

Part 7.5 Exceedance Report for Numeric Effluent Limitations

As described in Part 4.2.3.3, operators must conduct follow-up monitoring any time a monitoring event identifies an exceedance of a numeric effluent limitation. Part 7.5 specifies that the operator must submit an exceedance report to the EPA Regional Office no later than 30 days after receiving laboratory results. Part 7.5 also identifies the specific information the operator must include in this report, which is necessary for EPA to assess the potential impact of this discharge on water quality and the adequacy of the operator's response in addressing the exceedance.

Part 7.6 Additional Standard Recordkeeping and Reporting Requirements

Operators must comply with a number of different reporting requirements in the 2021 MSGP. Specific reporting requirements are included in Part 7; however, additional standard reporting requirements are included in Part 9 applicable to certain states or tribes as well as standard reporting requirements detailed in Appendix B, Subsection 12. Part 7.6 includes a summary of all of the required reports from Appendix B, Subsection 12, and specifies which reports the operator must submit to the applicable EPA Regional Office. Reports required to be submitted include:

- 24-hour reporting (see Appendix B, Subsection 12.F) for any noncompliance which may endanger health or the environment. Any information must be provided orally within 24 hours from the time the operator became aware of the circumstances;
- 5-day follow-up reporting to the 24-hour reporting (see Appendix B, Subsection 12.F) - A written submission must also be provided within five days of the time the operator became aware of the circumstances;
- Reportable quantity spills (see Part 2.1.2.4) – The operator must provide notification, as required under Part 2.1.2.4, as soon as there is knowledge of a leak, spill, or other release containing a hazardous substance or oil in an amount equal to or in excess of a reportable quantity.
- Planned changes (see Appendix B, Subsection 12.A) – The operator must give notice to EPA promptly, no fewer than 30 days prior to making any planned physical alterations or additions to the permitted facility that qualify the facility as a new source or that could significantly change the nature or significantly increase the quantity of pollutants discharged;
- Anticipated noncompliance (see Appendix B, Subsection 12.B) – The operator must give advance notice to EPA of any planned changes in the permitted facility or activity which they anticipate will result in noncompliance with permit requirements;
- Compliance schedules (see Appendix B, Subsection 12.F) – Reports of compliance or noncompliance with, or any progress reports on, interim and final requirements contained in any compliance schedule of this permit must be submitted no later than 14 days following each schedule date;
- Other noncompliance (see Appendix B, Subsection 12.G) – The operator must report all instances of noncompliance not reported in your Annual Report (pursuant to Part 7.2), compliance schedule report, or 24-hour report at the time monitoring reports are submitted; and
- Other information (see Appendix B, Subsection 12.H) – The operator must promptly submit facts or information if the operator becomes aware that they failed to submit relevant facts in the NOI, or that they submitted incorrect information in the NOI or in any report.

Part 7.7 Record Retention Requirements

This Part requires operators to maintain certain records to help them assess performance of stormwater control measures and as a way to document compliance with permit conditions. These requirements are consistent with federal regulations at 40 CFR 122.41(j), but have been tailored to more closely reflect requirements of the MSGP. Part 7.7 describes recordkeeping requirements associated with activities covered under the permit. These include the original SWPPP and any modifications, to provide an historical record of the SWPPP and its evolution, additional documentation, all reports and certifications required by the permit, monitoring data, and records of all data used to complete the NOI. Operators must retain copies of these documents for a period of at least three years from the date that the operator's coverage under the permit expires or is terminated. The recordkeeping requirements in Appendix B, Subsection B.12 include a more general statement of the NPDES standard condition for records retention, but does not impose additional requirements on the operator above what is required in Part 7.7.

Part 7.8 Addresses for Reports

This Part lists the addresses for EPA Regional Offices for reports that must be submitted to EPA.

Part 8 Special Requirements for Discharges Associated with Specific Industrial Activities

Except for the changes to the monitoring requirements described in Part 4 of this Fact Sheet and the changes to individual sectors listed below, the general format and requirements in the sector-specific parts of the permit (Part 8) are similar to the 2015 MSGP.

Sectors G, H and J (Mining Sectors)

EPA clarifies the language for Sector G monitoring requirements for discharges from waste rock and overburden piles at active metal mining facilities (Part 8.G.8.3 and 8.G.8.4). These particular monitoring requirements for Sector G under the 2015 MSGP had a unique, and potentially confusing, monitoring schedule. Under the 2015 MSGP, Part 8.G.8.3 for discharges from waste rock and overburden piles required the operator to conduct benchmark monitoring once in the first year for the parameters listed in Table 8.G-3, and twice annually in all subsequent years of permit coverage for any parameters for which the benchmark had been exceeded. Part 8.G.8.4 required operators to conduct additional analytical monitoring for other pollutants of concern listed in Table 8.G-4. Where a parameter overlapped for both Parts 8.G.8.3 and 8.G.8.4, the operator could use any monitoring results conducted for Part 8.G.8.3 to satisfy the monitoring requirement for that parameter for Part 8.G.8.4. Part 8.G.8.4 specified that the monitoring schedule for this additional analytical monitoring should be quarterly monitoring as per Part 4.2.2.2 (Part 6.2.1.2 in the 2015 MSGP). Given the overlap in parameters the operator is required to monitor for in these two parts and the potential confusion about the monitoring schedules for the same parameter, in the 2021 MSGP, EPA aligns the monitoring schedule for Part 8.G.8.4 to that of Part 8.G.8.3, that is, once in the first year and twice annually in all subsequent years of coverage under this permit for any parameters for which the benchmark threshold has been exceeded. Radium and uranium analytical monitoring is also required in Part 8.G.8.4 but these parameters do not have corresponding benchmarks values in Part 8.G.8.3. Without a benchmark value for comparison, the operator would be unable to determine if the parameter has been exceeded; therefore the monitoring schedule of "once in the first year and twice annually in all subsequent years of coverage under this permit for any parameters for which the benchmark has been exceeded" would not make sense for these two parameters. Under the 2021 MSGP, EPA requires the operator to monitor for radium and uranium quarterly for the first four full quarters of permit coverage commencing no earlier than May 30, 2021, after which the operator may discontinue monitoring for these two parameters. EPA also suspends the analytical monitoring currently required for radium and uranium in Part 8.G.8.4 until a relevant national recommended water quality criterion and possible benchmark value can be developed.

Part 9 Permit Conditions Applicable to Specific States, Indian Country or Territories

Section 401 of the CWA (see also 40 CFR §122.44(d)(3) and §124.53(a)) provides that no federal license or permit, including NPDES permits, to conduct any activity that may result in any discharge into navigable waters shall be granted until the State/Tribe in which the discharge originates certifies that the discharge will comply with the applicable provisions of sections 301, 302, 303, 306, and 307 of the CWA. The requirements under this Part of the permit provide state, U.S. territory and tribal requirements that these entities certify are necessary in order for the permit to include conditions to achieve their water quality standards.

EPA has two sets of regulations that implement CWA Section 401. The 40 CFR Part 121 regulatory requirements are generally applicable to all 401 certifications. In addition, 40 CFR 124.53applies specifically to 401 certifications of EPA-issued NPDES permits. In June 2020, EPA updated the 40 CFR Part 121 regulations. See 85 Fed. Reg. 42210 (July 13, 2020) ("2020 Rule")). However, because the certification process for this permit was initiated prior to the effective date of the updated regulations, those updated regulations do not apply to the certifications that were granted for this permit.

EPA regions requested certifications from states and tribes authorized to provide such certifications. These requests were sent to States and Tribes at various times in the spring of 2020. In response, certification decisions were received, also at various times and different months. All certification requests were sent, and all certification decisions were received, before September 11, 2020, which was the effective date of the updated 40 CFR Part 121 regulations. As a result, the certifications, including the conditions incorporated into this permit, were issued pursuant to the Part 121 regulations that were in place prior to the 2020 Rule and 40 CFR §122.44(d)(3) and §124.53.

Appendices

Appendix A Definitions and Acronyms

Appendix A provides definitions for permit-specific terms and a list of acronyms used throughout the permit.

The following definitions are revised in the permit:

- Green Infrastructure - the range of measures that use plant or soil systems, permeable pavement or other permeable surfaces or substrates, stormwater harvest and reuse, or landscaping to store, infiltrate, or evapotranspirate stormwater and reduce flows to sewer systems or to surface waters. See Section 502(27) of the Federal Water Pollution Control Act (33 U.S.C. 1362(27)).
- Primary Industrial Activity – EPA mistakenly omitted 40 CFR 122.26(b)(14)(xi) from the list of activities under this definition in the 2015 MSGP and amends the definition in the permit to match 40 CFR 122.26(b)(14).

The following acronym is added to the permit:

- AIM – Additional Implementation Measures

The following term was edited to match the text used in the permit:

- “Stormwater Team” was changed to “Stormwater Pollution Prevention Team.”

Appendix B Standard Permit Conditions

Appendix B includes the standard NPDES permit conditions consistent with 40 CFR 122.41. EPA makes no changes the standard permit conditions or to this appendix.

Appendix C Areas Covered

Appendix C specifies in what areas of the country the permit applies and includes specific corresponding permit numbers. EPA has added areas where EPA is the permitting authority in Indian country within the state of New York and Region 4 to the areas eligible for permit coverage under the MSGP. Previously eligible operators in Region 4 worked with the Region directly to get industrial stormwater permit coverage. For the 2021 MSGP, those operators can seek coverage under EPA's MSGP**.**

Appendix D Activities Covered

Appendix D describes the types of activities covered by the permit by subsector, SIC or Activity Code, and activity represented. EPA makes no changes to activities covered under the MSGP or to this appendix.

Appendix E Endangered Species Procedures

Appendix E specifies the Part 1.1.4 eligibility criteria related to the Endangered Species Act and protection of endangered and threatened ("listed") species and critical habitat and the procedures operators must follow to meet the criteria. See Fact Sheet discussion for Part 1.1.4 for final changes.

Appendix F Historic Properties Procedures

EPA has not made any changes to the historic preservation requirements or this appendix. Section 106 of the National Historic Preservation Act (NHPA) requires Federal agencies to take into account the effects of Federal "undertakings" on historic properties that are either listed on, or eligible for listing on, the National Register of Historic Places. The term Federal "undertaking" is defined in the NHPA regulations to include a project, activity, or program of a Federal agency including those carried out by or on behalf of a Federal agency, those carried out with Federal financial assistance, and those requiring a Federal permit, license or approval. See 36 CFR 800.16(y). Historic properties are defined in the NHPA regulations to include prehistoric or historic districts, sites, buildings, structures, or objects that are included in, or are eligible for inclusion in, the National Register of Historic Places. This term includes artifacts, records, and remains that are related to and located within such properties. See 36 CFR 800.16(1).

EPA's issuance of the MSGP is a federal undertaking within the meaning of the NHPA regulations. To address any issues relating to historic properties in connection with issuance of the permit, EPA has included criteria for operators to use to certify that potential impacts of their covered activities on historic properties have been appropriately considered and addressed. Although individual applications for coverage under the general permit do not constitute separate Federal undertakings, the screening criteria and certifications provide an appropriate site-specific means of addressing historic property issues in connection with EPA's issuance of the permit.

Coverage under the 2021 MSGP is available only if operators certify that they meet one of the eligibility criteria following the procedures in Appendix F related to compliance with historic properties protection pursuant to the NHPA. These criteria are used to identify whether land disturbances associated with the installation or revision of subsurface stormwater control measures would affect properties listed in, or eligible for listing in, the National Register of Historic Properties; and, if so, to determine the measures that will prevent or mitigate adverse effects to the properties.

EPA does not anticipate any effects on historic properties from the pollutants in the stormwater discharges covered by the 2021 MSGP. However, existing and new operators could undertake activities in connection with the 2021 MSGP that might affect historic properties if they install or new or modify stormwater control measures that involve subsurface disturbance. The overwhelming majority of sources covered under the 2021 MSGP will be operators that are seeking renewal of previous permit coverage. If these existing dischargers are not planning to construct new stormwater controls or conveyance systems, they have already addressed NHPA issues. In the 2015 MSGP, they were required to certify that they were either not affecting historic properties or they had obtained written agreement from the applicable SHPO, THPO, or other tribal representative regarding methods of mitigating potential impacts. EPA is not aware of any adverse effects on historic properties under the 2015 MSGP, nor the existence or need for a written agreement. Therefore, to the extent the 2021 MSGP authorizes renewal of prior coverage without relevant changes in operation, it has no potential to affect historic properties.

Where operators install or modify control measures that involve subsurface disturbance, the area of potential effect (APE) for the activities performed to comply with the permit, for historic preservation purposes, is limited to the location and depth of the earth disturbance associated with the installation or modification of the stormwater control measures. Operators need only consider the APE when doing the historic properties screening procedures to determine their eligibility criteria in Appendix F. This is the only scenario where activities authorized or undertaken in connection with the 2021 MSGP may affect historic properties. Since both new and existing dischargers could undertake such activities, all operators are required to follow the historic property screening procedures to document eligibility.

Appendix G Notice of Intent

Parts 1.3.2 and 7.1 require operators to use the electronic NPDES eReporting Tool system, or “NeT” system, to prepare and submit NOIs. However, where operators request and receive approval from their EPA Regional Office, they are authorized use the paper NOI form provided in Appendix G on a case-by-case basis.

Operators must provide the following types of information on the NOI form: (1) Permit Information, (2) Facility Operator Information, (3) Facility Information, (4) Discharge Information, (5) SWPPP Information, (6) Endangered Species Protection, (7) Historic Preservation, and (8) Certification Information. The NOI form provides EPA with the information necessary to help determine whether industrial operators have issues that could affect their eligibility to discharge under the permit and enables EPA to better match operators with their respective monitoring requirements and to prioritize oversight activities.

The NOI form has been updated from the 2015 MSGP. New questions on the form include:

- *For new dischargers only:* Do you have a pending enforcement action related to industrial stormwater by EPA, a state, or a citizen (to include both notices of violation (NOVs) by EPA or a state and notices of intent to bring a citizen suit)? (Note that no additional time for discharge authorization is added as contemplated in the proposed permit.)

- Added two questions to determine if PAH indicator monitoring in Part 4.2.1.1.b should apply:
    - Will you have stormwater discharges from paved surfaces that will be sealed or re-sealed with coal-tar sealcoat where industrial activities are located during coverage under this permit?
    - *For operators in Sector A only:* Do you manufacture, use, or store creosote or creosote-treated wood in areas that are exposed to precipitation?
- *For operators in Subsector K1 and G2 only to determine which selenium benchmark should be applied:* Is your receiving water(s) still/standing (lentic) (e.g., a lake or impoundment) or flowing (lotic) (e.g., a river or stream)?
- *For operators in New Mexico only (based on CWA section 401 conditions specific to operators in New Mexico in Part 9 of the permit):*
    - Do you anticipate the discharge of groundwater or spring water from your facility?
        - If answered yes:
            - What is the anticipated flow rate of the groundwater or spring water?
            - Provide information on the potential to encounter impacted groundwater or spring water in the space provided.
            - Using the Mapper tool [link provided] for reference, check if the following groundwater pollutant sources are located nearby the anticipated source of groundwater or spring water such that there is potential for contamination [displays options for project location relative to a source of potential groundwater contamination and the corresponding constituents likely to be required for testing].
                - If any selected:
                    - Provide a summary of test data indicating the quality of the groundwater or spring water to be discharged.
                    - Use the space provided [for an attachment] to provide test data indicating the quality of the groundwater or spring water to be discharged.
- Added the SIC code field for co-located activities
- Added Options for Answer Selections
    - *For facilities in Sector G only to determine which additional analytic monitoring for discharges from waste rock and overburden piles at active metal mining facilities in Part 8.G.8.3 should apply:* Updated the ore options available to select to include “Ore Not Listed.”
    - Added option for user to upload/attach their SWPPP (in addition to the existing options to provide a URL or provide select SWPPP information in the NOI itself)
- Added questions related to the following topics to the NOI form in NeT-MSGP in lieu of providing information to EPA via email communication or in another form to streamline and reduce burden:

- o Endangered species protection criterion determination questions and Criterion C3 information per Part 1.1.4
- o Historic properties criterion determination questions per Part 1.1.5
- o New dischargers to impaired waters eligibility information per Part 1.1.6.2
- o CERCLA-related eligibility information per Part 1.1.7

Appendix H Notice of Termination

Parts 1.4 and 7.1 require operators to use the NPDES eReporting Tool system, or "NeT" system, to prepare and submit their NOT when any of the conditions in Part 1.3.2 have been met. However, where the EPA Regional Office specifically authorizes operators to use a paper NOT form, those operators are required to complete and submit the paper form provided in Appendix H. EPA makes no changes to the NOT requirements or this appendix.

Appendix I Annual Reporting Form

Parts 7.1 and 7.4 require operators to use NeT to prepare and submit an Annual Report. However, where the EPA Regional Office specifically authorizes operators to use a paper Annual Report form, those operators must complete and submit the paper form provided in Appendix I. Information required consists of general information on the facility, summary findings from the routine facility inspections and quarterly visual assessments, and a description of corrective actions and/or AIM responses taken and the status of follow-up repairs, maintenance activities, or new SCMs installations for the previous year. EPA added the requirement to include AIM responses in the Annual Report form for the 2021 MSGP.

Appendix J Calculating Hardness in Receiving Waters for Hardness-Dependent Metals

Appendix J provides guidance to operators for determining their receiving water's hardness level for hardness-dependent metals benchmark monitoring. EPA no longer uses a hardness range for the copper benchmark thresholds and updated the benchmark threshold based on the 2007 national recommended aquatic life criteria for freshwater, as described further in Part 4.2.2.2. Therefore, the copper values have been removed from this appendix.

Appendix K No Exposure Certification (NEC)

Part 7.1 requires operators to use the NPDES eReporting Tool system, or "NeT" system, to prepare and submit a No Exposure Certification. However, where operators request and receive approval from their applicable EPA Regional Office, they are authorized to use the paper NEC form provided in Appendix K on a case-by-case basis. The NEC form informs EPA that the industrial operator has certified eligibility for the no exposure permitting exemption. EPA finalized the acronym for the No Exposure Certification from NOE to NEC.

Appendix L List of Tier 3, Tier 2, and Tier 2.5 Waters

Appendix L provides a list of Tier 3, Tier 2, and Tier 2.5 waters to assist industrial operators in determining eligibility for coverage under Parts 1.1.6.3, and in complying with any applicable requirements in Part 2.2. This appendix has been updated with the most current information on Tier 3, Tier 2, and Tier 2.5 waters.

Appendix M Discharge Monitoring Report (DMR) Form

Part 7.1 requires operators to use Net-DMR, EPA's electronic DMR tool to prepare and submit their Discharge Monitoring Reports. However, where an operator requests and receives a waiver from their EPA Regional Office, the operator is authorized use the paper DMR form included in Appendix M. The DMR form provides EPA with the information necessary to determine compliance with monitoring requirements. EPA updated the form to match the language included in the permit as follows: updated Part 3.d of the form to allow operators to indicate if monitoring was for indicator monitoring, updated Part 3.l of the form to match the abnormal event exception, added Part 3.n (demonstration that discharges of copper do not result in an exceedance of facility-specific criteria) and Part 3.o (demonstration that discharges of aluminum do not result in an exceedance of facility-specific criteria) to match the permit.

Appendix N List of SIC and NAICS Codes

For informational purposes only, Appendix N contains all the 1987 Standard Industrial Classification (SIC) codes that are regulated under stormwater regulations and matches them up with corresponding North American Industrial Classification System (NAICS) codes. NAICS codes have been in use since they replaced the SIC codes in 1997. There is not a one-to-one correspondence between the two systems, so a comprehensive list of regulated codes for both systems was generated. Such a list of codes and how these codes fit into the MSGP's sectors may be of interest to stakeholders. EPA adds the following SIC codes that were mistakenly omitted from pervious permits:

- Sector P: 4221-4225 (Farm Product Warehousing and Storage; Refrigerated Warehousing and Storage; and General Warehousing and Storage)
- Sector X: 2761 (Manifold Business Forms)
- Sector AA: 3442 (Metal Doors, Sash, Frames, Molding, and Trim Manufacturing)

Appendix O Summary of Permit Reports and Submittals

Appendix O provides a list of reporting and recordkeeping information that must be generated and, in many cases, submitted to the EPA. There were no changes made from the 2015 MSGP.

Appendix P List of CERCLA Sites

Appendix P provides a list of receiving waters associated with EPA Region 10 CERCLA sites to assist industrial operators in determining eligibility for coverage under Part 1.1.7. These receiving waters have been identified by EPA Region 10 as the ones most likely to experience contamination/recontamination due to toxic pollutants (particularly pollutants for which the site became associated with CERCLA clean ups) being introduced/reintroduced into the receiving water. The eligibility criterion in Part 1.1.7 (Part 1.1.4.10 in the 2015 MSGP) only applies to facilities in EPA Region 10.

Attachment T: Puerto Rico 2020 305(b) and 303(d) Integrated Report

RIVERS, STREAMS AND CREEKS

Size of waters Impaired by Causes all cycles (Monitored Miles for Rivers and Streams)	
Causes of Impairments	**Size of Waters Impaired (miles)**
Pesticides	544.3
Surfactants	313.4
Arsenic	25.4
Cadmium	54.7
Copper	1,192.8
Chromium VI	2,555.1
Lead	525.9
Mercury	55.8
Ammonia	364.6
Total, Phosphorus	2, 409.8
Total, Nitrogen	1,621.9
pH	805.1
Dissolved Oxygen	1,221.7
Temperature	1,147.6
Enterococcus	2,555.1
Fecal Coliforms	57.8
Oil & Grease	103.8
Turbidity	2,368.3
Silver	14.6

2020 Cycle 303(d) List – List of Rivers and Streams

Note: The 2020 303(d) List is comprised of the causes of impairments included in assessment cycles 2020, 2018, 2016, 2014, 2012, 2010, 2008 and 2006.

Basin	Waterbody Name	Waterbody Size (miles)	Class	2020 Monitoring Stations NS = Network SPD = Special Project Delisting	Designated Uses and Categories Summary				Notes	Priority	Potential Pollution Sources	Causes of Impairment	Impaired Cycles
					R1	R2	VA	AP					
RÍO GUAJATACA	RÍO GUAJATACA PRNR3A1	9.9	SD	NS 50011400	5	5	5	5		H	Collection System Failure Landfill Onsite Wastewater Systems	Chromium VI	2020
												Enterococcus	2020, 2018
												Fecal Coliform	2016, 2014, 2012, 2008
												Total, Nitrogen	2020, 2018, 2016
	RÍO GUAJATACA PRNR3A2	22	SD	NS 50010600	5	5	5	5	F	H	Agriculture Collection System Failure Confined Animal Feeding Operations Major Municipal Point Sources Onsite Wastewater Systems Urban Runoff/Storm Sewers	Chromium VI	2020
												Enterococcus	2020, 2018
												Total, Nitrogen	2020, 2018, 2016
	QUEBRADA LAS SEQUÍAS PRNQ3B	3.5	SD		4a	4a	5	5	D, F, H, L	H	Confined Animal Feeding Operations Onsite Wastewater Systems	Arsenic	2006
												Dissolved Oxygen	2006
RÍO GRANDE DE ARECIBO	RIO GRANDE DE ARECIBO PRNR7A1	22.4	SD	NS 50029000	5	5	5	5	K	H	Agriculture Collection System Failure Confined Animal Feeding Operations Onsite Wastewater Systems Urban Runoff/Storm Sewers	Chromium VI	2020
												Enterococcus	2020, 2018
												Temperature	2020
												Total, Phosphorus	2020, 2018
												Turbidity	2020, 2018, 2014, 2012, 2010, 2006
		122.8	SD	NS 50025000	5	5	5	5	K	H	Agriculture Collection System Failure	Chromium VI	2020
												Copper	2018, 2014

2020 Cycle 303(d) List – List of Rivers and Streams

Note: The 2020 303(d) List is comprised of the causes of impairments included in assessment cycles 2020, 2018, 2016, 2014, 2012, 2010, 2008 and 2006.

Basin	Waterbody Name	Waterbody Size (miles)	Class	2020 Monitoring Stations NS = Network SPD = Special Project Delisting	Designated Uses and Categories Summary				Notes	Priority	Potential Pollution Sources	Causes of Impairment	Impaired Cycles
					R1	R2	VA	AP					
	RÍO GRANDE DE ARECIBO PRNR7A2										Confined Animal Feeding Operations Landfill Minor Industrial Point Sources Major Municipal Point Sources Onsite Wastewater Systems Urban Runoff/Storm Sewers	Enterococcus Pesticide Temperature Total, Phosphorus Turbidity	2020, 2018 2008 2020 2020 2020, 2018, 2014, 2012, 2008
	TÚNEL PRNR7A3	28.9	SD	NS 50020500	5	5	5	5	K	H	Agriculture Collection System Failure Confined Animal Feeding Operations Minor Industrial Point Sources Minor Municipal Point Sources Onsite Wastewater Systems Urban Runoff/Storm Sewers	Chromium VI Enterococcus Turbidity	2020 2020, 2018 2018
	RÍO CAONILLAS PRNR7C1	87.0	SD	NS 50026000	5	5	5	5	K	H	Agriculture Collection System Failure Confined Animal Feeding Operations Landfill Major Municipal Point Sources Minor Industrial Point Sources Onsite Wastewater Systems Surface Mining Urban Runoff/Storm Sewers	Chromium VI Enterococcus Total, Nitrogen Total, Phosphorus Turbidity	2020 2020, 2018 2020 2020 2020

2020 Cycle 303(d) List – List of Rivers and Streams Note: The 2020 303(d) List is comprised of the causes of impairments included in assessment cycles 2020, 2018, 2016, 2014, 2012, 2010, 2008 and 2006.													
Basin	Waterbody Name	Waterbody Size (miles)	Class	2020 Monitoring Stations NS = Network SPD = Special Project Delisting	Designated Uses and Categories Summary				Notes	Priority	Potential Pollution Sources	Causes of Impairment	Impaired Cycles
					R1	R2	VA	AP					
	RÍO LIMÓN PRNR7C2	40.7	SD	NS 50026350	5	5	5	5	K	H	Agriculture Minor Industrial Point Sources Onsite Wastewater Systems	Chromium VI	2020
												Enterococcus	2020, 2018
												Total, Nitrogen	2020
												Turbidity	2020, 2016
	RÍO YUNES PRNR7C3	32.7	SD	NS 50026950	5	5	5	5	K	H	Agriculture Onsite Wastewater Systems Urban Runoff/Storm Sewers	Chromium VI	2020
												Copper	2018
												Enterococcus	2020, 2018
												Temperature	2020
												Total, Nitrogen	2020
												Total, Phosphorus	2020, 2018
												Turbidity	2020, 2018
	RÍO TANAMÁ PRNR7B2	43.5	SD	NS 50028000	5	5	5	5	K	H	Agriculture Collection System Failure Onsite Wastewater Systems	Chromium VI	2020
												Copper	2018
												Enterococcus	2020, 2018
												Lead	2018
												Total, Nitrogen	2018
												Total, Phosphorus	2018
												Turbidity	2018, 2014, 2012, 2008
RÍO GRANDE DE MANATÍ	RÍO GRANDE DE MANATÍ PRNR8A1	31	SD	NS 50038100	5	5	5	5	K	H	Collection System Failure Confined Animal Feeding Operations Landfill	Chromium VI	2020
												Copper	2018
												Enterococcus	2018
												Total, Nitrogen	2018

2020 Cycle 303(d) List – List of Rivers and Streams

Note: The 2020 303(d) List is comprised of the causes of impairments included in assessment cycles 2020, 2018, 2016, 2014, 2012, 2010, 2008 and 2006.

Basin	Waterbody Name	Waterbody Size (miles)	Class	2020 Monitoring Stations NS = Network SPD = Special Project Delisting	Designated Uses and Categories Summary				Notes	Priority	Potential Pollution Sources	Causes of Impairment	Impaired Cycles
					R1	R2	VA	AP					
											Major Municipal Point Sources Onsite Wastewater Systems Urban Runoff/Storm Sewers	Total, Phosphorus	2018, 2016
												Turbidity	2018, 2014, 2012, 2010, 2008, 2006
	RÍO GRANDE DE MANATÍ PRNR8A2	38.1	SD	NS 50035500	5	5	5	5	K	H	Collection System Failure Confined Animal Feeding Operations Landfills Onsite Wastewater Systems Urban Runoff/Storm Sewers	Chromium VI	2020
												Copper	2018
												Enterococcus	2020, 2018
												Temperature	2020
												Turbidity	2018, 2014, 2012, 2010, 2008, 2006
	RÍO CIALITO PRNR8B	25.8	SD	NS 50035950	5	5	5	5	K	H	Agriculture Collection System Failure Confined Animal Feeding Operations Minor Industrial Point Sources Onsite Wastewater Systems Urban Runoff/Storm Sewers	Chromium VI	2020
												Enterococcus	2020, 2018
												pH	2018
												Turbidity	2018, 2014, 2012, 2010
	RÍO OROCOVIS PRNR8E1	19.8	SD	NS 50030700	5	5	5	5	K	H	Collection System Failure Landfill Major Municipal Point Sources Minor Industrial Point Sources Onsite Wastewater Systems	Chromium VI	2020
												Enterococcus	2020, 2018
												Total, Nitrogen	2020
												Total, Phosphorus	2020, 2018, 2016

2020 Cycle 303(d) List – List of Rivers and Streams Note: The 2020 303(d) List is comprised of the causes of impairments included in assessment cycles 2020, 2018, 2016, 2014, 2012, 2010, 2008 and 2006.													
Basin	Waterbody Name	Waterbody Size (miles)	Class	2020 Monitoring Stations NS = Network SPD = Special Project Delisting	Designated Uses and Categories Summary				Notes	Priority	Potential Pollution Sources	Causes of Impairment	Impaired Cycles
					R1	R2	VA	AP					
											Urban Runoff/Storm Sewers	Turbidity	2020, 2018, 2016, 2014, 2012, 2010, 2008, 2006
	RÍO BOTIJAS PRNR8E2	19.1	SD	SPD 50030300	4a	4a	5	3	D K	H	Confined Animal Feeding Operations Onsite Wastewater Systems	pH	2020
RÍO CIBUCO	RÍO CIBUCO PRNR9A	31.1	SD	NS 50039500	5	5	5	5	A	H	Agriculture Collection System Failure Confined Animal Feeding Operations Landfill Major Municipal Point Sources Onsite Wastewater Systems	Chromium VI	2020
												Copper	2018
												Enterococcus	2020, 2018
												Total, Nitrogen	2020, 2018, 2016
												Total, Phosphorus	2020, 2018
												Turbidity	2020, 2018, 2014, 2012, 2010, 2008, 2006
	RÍO MOROVIS PRNR9B2	25.5	SD	SPD PR13001 PR13017	4a	4a	5	3	A D	H	Collection System Failure Confined Animal Feeding Operations Landfill Minor Municipal Point Sources Onsite Wastewater Systems Urban Runoff/Storm Sewers	Dissolved Oxygen	2020, 2014
		21	SD		5	5	5	5	B	H	Collection System Failure	Chromium VI	2020

2020 Cycle 303(d) List – List of Rivers and Streams

Note: The 2020 303(d) List is comprised of the causes of impairments included in assessment cycles 2020, 2018, 2016, 2014, 2012, 2010, 2008 and 2006.

Basin	Waterbody Name	Waterbody Size (miles)	Class	2020 Monitoring Stations NS = Network SPD = Special Project Delisting	Designated Uses and Categories Summary				Notes	Priority	Potential Pollution Sources	Causes of Impairment	Impaired Cycles
					R1	R2	VA	AP					
RÍO DE LA PLATA	RÍO DE LA PLATA PRER10A1			NS 50046000							Confined Animal Feeding Operations Major Industrial Point Sources Minor Municipal Point Sources Onsite Wastewater Systems Surfaces Mining	Dissolved Oxygen	2020, 2018, 2016
												Enterococcus	2020, 2018
												Temperature	2020
												Total, Nitrogen	2018, 2016
												Total, Phosphorus	2018
												Turbidity	2018
	RÍO DE LA PLATA PRER10A3	55.7	SD	NS 50044000	5	5	5	5	B	H	Agriculture Collection System Failure Confined Animal Feeding Operations Landfill Major Municipal Point Sources Onsite Wastewater Systems	Chromium VI	2020
												Enterococcus	2020, 2018
												pH	2020
												Total, Nitrogen	2018
												Total, Phosphorus	2018, 2016
												Turbidity	2018, 2014, 2012, 2010
	RÍO DE LA PLATA PRER10A4	10.2	SD	NS 50043000	5	5	5	5	B	H	Agriculture Confined Animal Feeding Operations Landfill Minor Industrial Point Sources Onsite Wastewater Systems	Chromium VI	2020
												Enterococcus	2020, 2018
												pH	2020
												Temperature	2020
												Total, Nitrogen	2018
												Total, Phosphorus	2020, 2018, 2016
												Turbidity	2020, 2018, 2016, 2014, 2010, 2008

2020 Cycle 303(d) List – List of Rivers and Streams

Note: The 2020 303(d) List is comprised of the causes of impairments included in assessment cycles 2020, 2018, 2016, 2014, 2012, 2010, 2008 and 2006.

Basin	Waterbody Name	Waterbody Size (miles)	Class	2020 Monitoring Stations NS = Network SPD = Special Project Delisting	Designated Uses and Categories Summary				Notes	Priority	Potential Pollution Sources	Causes of Impairment	Impaired Cycles
					R1	R2	VA	AP					
	RÍO DE LA PLATA PRER10A5	92.7	SD	NS 50042500	5	5	5	5	B	H	Collection System Failure Confined Animal Feeding Operations Minor Industrial Point Sources Onsite Wastewater Systems Urban/Runoff/Storm Sewers	Chromium VI	2020
												Copper	2020
												Enterococcus	2020, 2018
												Lead	2020
												pH	2020
												Total, Nitrogen	2018
												Total, Phosphorus	2020, 2018, 2016
												Turbidity	2018, 2014, 2006
	RÍO GUADIANA PRER10E	21.8	SD	NS 50044850	5	5	5	5	B	H	Collection System Failure Confined Animal Feeding Operations Minor Municipal Point Sources Onsite Wastewater Systems	Chromium VI	2020
												Enterococcus	2020, 2018
												Total, Nitrogen	2018, 2016
												Total, Phosphorus	2020, 2018, 2016
												Turbidity	2018, 2016, 2014, 2012, 2010, 2008
	RÍO ARROYATA PRER10G	36.8	SD	NS 50043998	5	5	5	5	B	H	Agriculture Collection System Failure Confined Animal Feeding Operations Onsite Wastewater Systems	Chromium VI	2020
												Dissolved Oxygen	2018
												Enterococcus	2020, 2018
												Total, Phosphorus	2020, 2018, 2016
												Turbidity	2018, 2014
	RÍO MATÓN	15.8	SD	NS	5	5	5	5	B	H		Chromium VI	2020

2020 Cycle 303(d) List – List of Rivers and Streams

Note: The 2020 303(d) List is comprised of the causes of impairments included in assessment cycles 2020, 2018, 2016, 2014, 2012, 2010, 2008 and 2006.

Basin	Waterbody Name	Waterbody Size (miles)	Class	2020 Monitoring Stations NS = Network SPD = Special Project Delisting	Designated Uses and Categories Summary				Notes	Priority	Potential Pollution Sources	Causes of Impairment	Impaired Cycles
					R1	R2	VA	AP					
	PRER10J			50042800							Confined Animal Feeding Operations Onsite Wastewater Systems	Enterococcus pH Total, Nitrogen Total, Phosphorus	2020, 2018 2020 2020 2020
	RÍO GUAVATE PRER10K	19.8		SPD PR1161	4a	4a	5	3	B D	H	Collection System Failure Confined Animal Feeding Operations Onsite Wastewater Systems Urban Runoff/Storm Sewers	pH	2020, 2012
RÍO HONDO	RÍO HONDO PRER11A	22	SD		4a	4a	5	3	D F H	H	Collection System Failure Urban Runoff/Storm Sewers	Dissolved Oxygen Surfactants	2016, 2014, 2008, 2006 2016, 2008, 2006
RÍO BAYAMÓN	RÍO BAYAMÓN PRER12A1	33.6	SD	NS 50048510	5	5	5	5	F	H	Collection System Failure Confined Animal Feeding Operations Minor Industrial Point Sources Onsite Wastewater Systems Urban Runoff/Storm Sewers	Ammonia Chromium VI Enterococcus pH Total, Nitrogen Total, Phosphorus Turbidity	2020 2020 2020, 2018 2020 2020 2018, 2016 2018, 2014, 2010
	RÍO BAYAMÓN PRER12A2	83.7	SD	NS 50047820	5	5	5	5	F	H	Collection System Failure Confined Animal Feeding Operations	Chromium VI Enterococcus Total, Nitrogen	2020 2020, 2018 2018

2020 Cycle 303(d) List – List of Rivers and Streams

Note: The 2020 303(d) List is comprised of the causes of impairments included in assessment cycles 2020, 2018, 2016, 2014, 2012, 2010, 2008 and 2006.

Basin	Waterbody Name	Waterbody Size (miles)	Class	2020 Monitoring Stations NS = Network SPD = Special Project Delisting	Designated Uses and Categories Summary				Notes	Priority	Potential Pollution Sources	Causes of Impairment	Impaired Cycles
					R1	R2	VA	AP					
											Landfill Minor Industrial Point Sources Onsite Wastewater Systems Urban Runoff/Storm Sewers	Total, Phosphorus	2018
	RÍO GUAYNABO PRER12B	50.7	SD	NS 50047990	5	5	5	5	F	H	Collection System Failure Confined Animal Feeding Operations Landfill Major Industrial Point Sources Onsite Wastewater Systems Urban Runoff/Storm Sewers	Chromium VI	2020
												Dissolved Oxygen	2020
												Enterococcus	2020, 2018
												Total, Nitrogen	2018, 2016
												Total, Phosphorus	2020, 2018, 2016
												Turbidity	2018, 2016, 2014, 2012, 2010, 2008, 2006
RÍO GRANDE DE LOIZA	RÍO GRANDE DE LOIZA PRER14A1	31	SD	NS 50059100	5	5	5	5	F	H	Collection System Failure Confined Animal Feeding Operations Major Industrial Point Sources Onsite Wastewater Systems Surfaces Mining Urban Runoff/Storm Sewers	Chromium VI	2020
												Enterococcus	2018
												Total, Phosphorus	2020, 2016
												Turbidity	2020, 2018, 2016, 2014, 2010, 2008, 2006
	RÍO GRANDE DE LOIZA PRER14A2	86.6	SD	NS 50055000	5	5	5	5	C E G	H	Agriculture Collection System Failure	Copper	2020
												Chromium VI	2020
												Enterococcus	2020, 2018

2020 Cycle 303(d) List – List of Rivers and Streams

Note: The 2020 303(d) List is comprised of the causes of impairments included in assessment cycles 2020, 2018, 2016, 2014, 2012, 2010, 2008 and 2006.

Basin	Waterbody Name	Waterbody Size (miles)	Class	2020 Monitoring Stations NS = Network SPD = Special Project Delisting	Designated Uses and Categories Summary				Notes	Priority	Potential Pollution Sources	Causes of Impairment	Impaired Cycles
					R1	R2	VA	AP					
											Confined Animal Feeding Operations Landfill Minor Industrial Point Sources Onsite Wastewater Systems Surfaces Mining Urban Runoff/Storm Sewers	Lead	2018
												Pesticides	2008
												Total, Phosphorus	2018, 2016
												Turbidity	2018
	RÍO CANÓVANAS PRER14B	32.6	SD		4a	4a	5	3	D F H	H	Confined Animal Feeding Operations Minor Industrial Point Sources Onsite Wastewater Systems Urban Runoff/Storm Sewers	Dissolved Oxygen	2016
	RÍO CANOVANILLAS PRER14C	27.9	SD		4a	4a	5	3	D F H	H	Collection System Failure Confined Animal Feeding Operations Onsite Wastewater Systems Urban Runoff/Storm Sewers	Dissolved Oxygen	2016, 2014
	RÍO GURABO PRER14G1	124.3	SD	NS 50057025	5	5	5	5	C E	H	Collection System Failure Confined Animal Feeding Operations Landfills Minor Industrial Point Sources Onsite Wastewater Systems Surfaces Mining	Chromium VI	2020
												Copper	2018, 2016, 2014, 2010, 2006
												Enterococcus	2020, 2018
												Temperature	2020
												Total, Nitrogen	2020, 2018
												Total, Phosphorus	2020, 2018, 2016

2020 Cycle 303(d) List – List of Rivers and Streams

Note: The 2020 303(d) List is comprised of the causes of impairments included in assessment cycles 2020, 2018, 2016, 2014, 2012, 2010, 2008 and 2006.

Basin	Waterbody Name	Waterbody Size (miles)	Class	2020 Monitoring Stations NS = Network SPD = Special Project Delisting	Designated Uses and Categories Summary				Notes	Priority	Potential Pollution Sources	Causes of Impairment	Impaired Cycles
					R1	R2	VA	AP					
												Turbidity	2020, 2018, 2014, 2012, 2010, 2008, 2006
	RÍO VALENCIANO PRER14G2	42.8	SD	NS 50056500	5	5	5	5	C	H	Agriculture Collection System Failure Confined Animal Feeding Operations Landfills Onsite Wastewater Systems Urban Runoff/Storm Sewers	Ammonia	2020
												Chromium VI	2020
												Enterococcus	2020, 2018
												pH	2020
												Surfactants	2020
												Total, Phosphorus	2020, 2018, 2016
												Turbidity	2018, 2016, 2014, 2006
	RÍO BAIROA PRER14H	16.3	SD	NS 50055410	5	5	5	5	C E G I	H	Collection System Failure Major Municipal Point Sources Minor Industrial Point Sources Onsite Wastewater Systems Urban Runoff/Storm Sewers	Chromium VI	2020
												Enterococcus	2020, 2018
												Surfactants	2018
												Total, Nitrogen	2018, 2016
												Total, Phosphorus	2020, 2018, 2016, 2014, 2012, 2010, 2008
	RÍO CAGÜITAS PRER14I	33.9	SD	NS 50055250	5	5	5	5	C E G I	H	Collection System Failure Confined Animal Feeding Operations Onsite Wastewater Systems Surfaces Mining	Chromium VI	2020
												Enterococcus	2020, 2018
												Surfactants	2020
												Total, Nitrogen	2020, 2018, 2016

2020 Cycle 303(d) List – List of Rivers and Streams

Note: The 2020 303(d) List is comprised of the causes of impairments included in assessment cycles 2020, 2018, 2016, 2014, 2012, 2010, 2008 and 2006.

Basin	Waterbody Name	Waterbody Size (miles)	Class	2020 Monitoring Stations NS = Network SPD = Special Project Delisting	Designated Uses and Categories Summary				Notes	Priority	Potential Pollution Sources	Causes of Impairment	Impaired Cycles
					R1	R2	VA	AP					
											Urban Runoff/Storm Sewers	Total, Phosphorus	2020, 2018, 2016
												Turbidity	2018, 2014, 2010, 2008
	RÍO TURABO PRER14J	54.7	SD	NS 50054500	5	5	5	5	C	H	Agriculture Collection System Failure Confined Animal Feeding Operations Minor Industrial Point Sources Minor Municipal Point Sources Onsite Wastewater Systems Urban Runoff/Storm Sewers	Cadmium	2018
												Chromium VI	2020
												Copper	2018, 2014
												Enterococcus	2020, 2018
												Lead	2018
												Temperature	2020
												Total, Phosphorus	2018
												Turbidity	2018, 2014, 2006
	RÍO CAYAGUAS PRER14K	38.5	SD	NS 50051500	5	5	5	5	C	H	Agriculture Confined Animal Feeding Operations Onsite Wastewater Systems	Chromium VI	2020
												Copper	2018
												Enterococcus	2020, 2018
												Lead	2018
												Total, Phosphorus	2018, 2016
												Turbidity	2018
RÍO HERRERA	RÍO HERRERA PRER15A	17	SD		4a	4a	5	5	D F H	M	Confined Animal Feeding Operations Onsite Wastewater Systems Urban Runoff/Storm Sewers	Dissolved Oxygen	2016, 2006
												Turbidity	2014, 2012
		53.9	SD		5	5	5	5	F	M	Collection System Failure	Chromium VI	2020

2020 Cycle 303(d) List – List of Rivers and Streams

Note: The 2020 303(d) List is comprised of the causes of impairments included in assessment cycles 2020, 2018, 2016, 2014, 2012, 2010, 2008 and 2006.

Basin	Waterbody Name	Waterbody Size (miles)	Class	2020 Monitoring Stations NS = Network SPD = Special Project Delisting	Designated Uses and Categories Summary				Notes	Priority	Potential Pollution Sources	Causes of Impairment	Impaired Cycles
					R1	R2	VA	AP					
RÍO ESPIRITU SANTO	RÍO ESPÍRITU SANTO PRER16A			NS 50063800							Confined Animal Feeding Operations Landfill Onsite Wastewater Systems	Enterococcus	2020, 2018
												Total, Nitrogen	2018
QUEBRADA MATA DE PLÁTANO	QUEBRADA MATA DE PLÁTANO PREQ18A	4.0	SD		4a	4a	5	3	D F H	M	Onsite Wastewater Systems Urban Runoff/Storm Sewers	Dissolved Oxygen	2016, 2014, 2012, 2006
												Surfactants	2016, 2012
QUEBRADA FAJARDO	QUEBRADA FAJARDO PREQ21A	10.0	SD	SPD 50069410	4a	4a	5	3	D J	M	Collection System Failure Onsite Wastewater Systems	Dissolved Oxygen	2020, 2006
												pH	2020, 2018
												Temperature	2020
RÍO FAJARDO	RÍO FAJARDO PRER22A	59.0	SD	NS 50072500	5	5	5	5	J	M	Confined Animal Feeding Operations Landfill Major Municipal Point Sources Minor Industrial Point Sources Onsite Wastewater Systems Urban Runoff/Storm Sewers	Chromium VI	2020
												Dissolved Oxygen	2018, 2014, 2012
												Enterococcus	2020, 2018
												Temperature	2020
												Total, Nitrogen	2020, 2018, 2016
												Total, Phosphorus	2020, 2018, 2016
												Turbidity	2018, 2016, 2012, 2010, 2008, 2006

2020 Cycle 303(d) List – List of Rivers and Streams Note: The 2020 303(d) List is comprised of the causes of impairments included in assessment cycles 2020, 2018, 2016, 2014, 2012, 2010, 2008 and 2006.													
Basin	Waterbody Name	Waterbody Size (miles)	Class	2020 Monitoring Stations NS = Network SPD = Special Project Delisting	Designated Uses and Categories Summary				Notes	Priority	Potential Pollution Sources	Causes of Impairment	Impaired Cycles
					R1	R2	VA	AP					
RÍO DEMAJAGUA	RÍO DEMAJAGUA PRER23A	2.8	SD	SPD 50072700	4a	4a	5	3	D J	M	Onsite Wastewater Systems	Dissolved Oxygen	2020, 2016, 2012
QUEBRADA CEIBA	QUEBRADA CEIBA PREQ24A	5.0	SD		4a	4a	5	3	D H J	M M	Onsite Wastewater Systems	Dissolved Oxygen	2016, 2014, 2012, 2006
												Surfactants	2016, 2014, 2012
QUEBRADA AGUAS CLARAS	QUEBRADA AGUAS CLARAS PREQ25A	4.8	SD	SPD 50072900	4a	4a	5	3	D J	M	Onsite Wastewater Systems Urban Runoff/Storm Sewers	Dissolved Oxygen	2020, 2012, 2006
RÍO DAGUAO	RÍO DAGUAO PRER26A	13.8	SD		4a	4a	5	3	D H J	M	Confined Animal Feeding Operations Onsite Wastewater Systems	Dissolved Oxygen	2016, 2012, 2006
QUEBRADA BOTIJAS	QUEBRADA BOTIJAS PREQ28A	7.4	SD	SPD 50073500	4a	4a	5	3	D J	M	Confined Animal Feeding Operations Onsite Wastewater Systems	Dissolved Oxygen	2020, 2018, 2012, 2006
RÍO BLANCO	RÍO BLANCO PRER30A	45.0	SD	SPD 50077600	4a	4a	5	5	D J	H	Agriculture Confined Animal Feeding Operations Minor Industrial Point Sources Onsite Wastewater Systems Urban Runoff/Storm Sewers	Turbidity	2020, 2012
	QUEBRADA PEÑA POBRE PREQ30B	13.4	SD	SPD 50076300	4a	4a	5	3	D J	H	Agriculture Confined Animal Feeding Operations Onsite Wastewater Systems	Dissolved Oxygen	2020, 2018, 2006

2020 Cycle 303(d) List – List of Rivers and Streams Note: The 2020 303(d) List is comprised of the causes of impairments included in assessment cycles 2020, 2018, 2016, 2014, 2012, 2010, 2008 and 2006.													
Basin	**Waterbody Name**	**Waterbody Size (miles)**	**Class**	**2020 Monitoring Stations NS = Network SPD = Special Project Delisting**	**Designated Uses and Categories Summary**				**Notes**	**Priority**	**Potential Pollution Sources**	**Causes of Impairment**	**Impaired Cycles**
					R1	**R2**	**VA**	**AP**					
RÍO ANTÓN RUIZ	RÍO ANTÓN RUIZ PRER31A	16.9	SD	SPD 50078510	4a	4a	5	3	D J	M	Agriculture Confined Animal Feeding Operations Onsite Wastewater Systems	Dissolved Oxygen	2020, 2014, 2016, 2012
												Temperature	2020
QUEBRADA FRONTERA	QUEBRADA FRONTERA PREQ32A	8.5	SD	SPD 50078900	4a	4a	5	3	D J	M	Collection System Failure Confined Animal Feeding Operations Onsite Wastewater Systems	Dissolved Oxygen	2020, 2012, 2006
RÍO HUMACAO	RÍO HUMACAO PRER33A	55.8	SD	NS 50082000	5	5	5	5	F	M	Collection System Failure Confined Animal Feeding Operations Landfill Onsite Wastewater Systems Urban Runoff/Storm Sewers	Ammonia	2020
												Chromium VI	2020
												Copper	2018, 2014
												Enterococcus	2020, 2018
												Lead	2018, 2014
												Mercury	2020, 2018
												pH	2020
												Surfactants	2018, 2014, 2010, 2008
												Temperature	2020
												Total, Nitrogen	2020, 2018
												Total, Phosphorus	2020, 2018, 2016
												Turbidity	2020, 2018, 2016, 2014, 2012, 2008, 2006

2020 Cycle 303(d) List – List of Rivers and Streams

Note: The 2020 303(d) List is comprised of the causes of impairments included in assessment cycles 2020, 2018, 2016, 2014, 2012, 2010, 2008 and 2006.

Basin	Waterbody Name	Waterbody Size (miles)	Class	2020 Monitoring Stations NS = Network SPD = Special Project Delisting	Designated Uses and Categories Summary				Notes	Priority	Potential Pollution Sources	Causes of Impairment	Impaired Cycles
					R1	R2	VA	AP					
RÍO CANDELERO	RÍO CANDELERO PRER34A	10.4	SD	SPD 50082700	4a	4a	5	3	D F	M	Onsite Wastewater Systems Confined Animal Feeding Operations	Dissolved Oxygen	2020, 2018, 2012
RÍO GUAYANÉS	RÍO GUAYANÉS PRER35A	62.0	SD	NS 50085000	5	5	5	5	F	M	Agriculture Confined Animal Feeding Operations Landfill Minor Industrial Point Sources Onsite Wastewater Systems	Chromium VI	2020
												Copper	2020, 2016, 2014, 2012, 2006
												Enterococcus	2020, 2018
												Lead	2020, 2016, 2014, 2006
												pH	2020, 2016, 2014
												Total, Phosphorus	2020
												Turbidity	2020, 2016, 2014, 2012, 2006
RÍO MAUNABO	RÍO MAUNABO PRER37A	36.0	SD	NS 50091000	5	5	5	5	F	M	Agriculture Collection System Failure Landfill Minor Industrial Point Sources Minor Municipal Point Sources Onsite Wastewater Systems Urban Runoff/Storm Sewer	Chromium VI	2020
												Enterococcus	2020, 2018
												Temperature	2020
												Total, Nitrogen	2020, 2016
												Total, Phosphorus	2020, 2016
												Turbidity	2020
QUEBRADA PALENQUE	QUEBRADA PALENQUE	1.0	SD		4a	4a	5	3	D H	M	Onsite Wastewater Systems	Dissolved Oxygen	2012

2020 Cycle 303(d) List – List of Rivers and Streams

Note: The 2020 303(d) List is comprised of the causes of impairments included in assessment cycles 2020, 2018, 2016, 2014, 2012, 2010, 2008 and 2006.

Basin	Waterbody Name	Waterbody Size (miles)	Class	2020 Monitoring Stations NS = Network SPD = Special Project Delisting	Designated Uses and Categories Summary				Notes	Priority	Potential Pollution Sources	Causes of Impairment	Impaired Cycles
					R1	R2	VA	AP					
	PRSQ41A								J, L				
RÍO CHICO	RÍO CHICO PRSR42A	14.6	SD		4a	4a	5	5	D H J L	M	Agriculture Confined Animal Feeding Operations Onsite Wastewater Systems Urban Runoff/Storm Sewers	Ammonia	2016, 2014, 2012, 2006
												Copper	2016, 2006
												Dissolved Oxygen	2016, 2012, 2006
												Silver	2004
												Surfactants	2016, 2006
												Total, Phosphorus	2016, 2006
RÍO GRANDE DE PATILLAS	RÍO GRANDE DE PATILLAS PRSR43A2	35.9	SD	NS 50092000	5	5	5	1	J	H	Onsite Wastewater Systems	Chromium VI	2020
												Enterococcus	2020, 2018
												pH	2020
RÍO GUAMANÍ	RÍO GUAMANÍ PRSR49A	22.0	SD		4a	4a	5	3	D H J L	M	Collection System Failure Confined Animal Feeding Operations Onsite Wastewater Systems Urban Runoff/Storm Sewers	Temperature	2012
QUEBRADA MELANÍA	QUEBRADA MELANÍA PRSQ50A	7.0	SD	SPD 50096010	4a	4a	5	3	D J L	M	Landfill Onsite Wastewater Systems Urban Runoff/Storm Sewers	Dissolved Oxygen	2020, 2018, 2016, 2014, 2012, 2008
RÍO SECO	RÍO SECO PRSR51A	24.7	SD		4a	4a	5	3	D, H J, L	M	Agriculture Onsite Wastewater Systems	Dissolved Oxygen	2012
QUEBRADA AMORÓS		0.7	SD	SPD 50098600	4a	4a	5	3	D J	M	Agriculture Collection System Failure	Dissolved Oxygen	2020, 2012, 2008

2020 Cycle 303(d) List – List of Rivers and Streams

Note: The 2020 303(d) List is comprised of the causes of impairments included in assessment cycles 2020, 2018, 2016, 2014, 2012, 2010, 2008 and 2006.

Basin	Waterbody Name	Waterbody Size (miles)	Class	2020 Monitoring Stations NS = Network SPD = Special Project Delisting	Designated Uses and Categories Summary				Notes	Priority	Potential Pollution Sources	Causes of Impairment	Impaired Cycles
					R1	R2	VA	AP					
	QUEBRADA AMORÓS PRSQ52A								L		Onsite Wastewater Systems	pH	2020
QUEBRADA AGUAS VERDES	QUEBRADA AGUAS VERDES PRSQ53A	15.0	SD	SPD 50099400	4a	4a	5	3	D F L	M	Confined Animal Feeding Operations Onsite Wastewater Systems	Dissolved Oxygen	2020, 2016, 2014, 2012
RÍO NIGUAS DE SALINAS	RÍO NIGUAS DE SALINAS PRSR54A	102.5	SD		4a	4a	5	3	D F H L	M	Confined Animal Feeding Operations Onsite Wastewater Systems Surfaces Mining Urban Runoff/Storm Sewers	Dissolved Oxygen	2010
RÍO CAYURES	RÍO CAYURES PRSR56A	5.0	SD		4a	4a	5	3	D H J L	M	Agriculture Onsite Wastewater Systems	Surfactants	2016, 2014, 2012
												Dissolved Oxygen	2016, 2014, 2012
RÍO COAMO	RÍO COAMO PRSR57A2	59.0	SD	NS 50106500	5	5	5	5	J	H	Agriculture Collection System Failure Confined Animal Feeding Operations Landfill Minor Industrial Point Sources Onsite Wastewater Systems Urban Runoff/Storm Sewers	Chromium VI	2020
												Enterococcus	2020, 2018
												pH	2020
												Total, Nitrogen	2020, 2016
												Total, Phosphorus	2018
	RÍO CUYÓN PRSR57B	49.2	SD	SPD 50106000	4a	4a	5	3	D J	H	Agriculture	Temperature	2020

2020 Cycle 303(d) List – List of Rivers and Streams

Note: The 2020 303(d) List is comprised of the causes of impairments included in assessment cycles 2020, 2018, 2016, 2014, 2012, 2010, 2008 and 2006.

Basin	Waterbody Name	Waterbody Size (miles)	Class	2020 Monitoring Stations NS = Network SPD = Special Project Delisting	Designated Uses and Categories Summary				Notes	Priority	Potential Pollution Sources	Causes of Impairment	Impaired Cycles
					R1	R2	VA	AP					
											Collection System Failure Confined Animal Feeding Operations Onsite Wastewater Systems Urban Runoff/Storm Sewers		
RÍO BUCANÁ-CERRILLOS	RÍO BUCANÁ-CERRILLOS PRSR62A1	27.8	SD	NS 50114400	5	5	5	5	J	M	Collection System Failure Onsite Wastewater Systems Surfaces Mining Urban Runoff/Storm Sewers	Chromium VI	2020
												Dissolved Oxygen	2020, 2018
												Enterococcus	2020, 2018
												Temperature	2020
												Total, Phosphorus	2018
												Turbidity	2018
	RÍO BUCANÁ-CERRILLOS PRSR62A2	32.6	SD	NS 50113800	5	5	5	5	J	M	Agriculture Minor Industrial Point Sources Onsite Wastewater Systems	Chromium VI	2020
												Enterococcus	2020, 2018
												pH	2020
												Total, Phosphorus	2020
												Turbidity	2020
RÍO PORTUGUÉS	RÍO PORTUGUÉS PRSR63A	54.0	SD	NS 50116200	5	5	5	5	J	M	Collection System Failure Minor Industrial Point Sources Onsite Wastewater Systems Urban Runoff/Storm Sewers	Ammonia	2018
												Chromium VI	2020
												Enterococcus	2020, 2018
												Temperature	2020
												Total, Nitrogen	2020
												Total, Phosphorus	2020, 2018

2020 Cycle 303(d) List – List of Rivers and Streams Note: The 2020 303(d) List is comprised of the causes of impairments included in assessment cycles 2020, 2018, 2016, 2014, 2012, 2010, 2008 and 2006.													
Basin	Waterbody Name	Waterbody Size (miles)	Class	2020 Monitoring Stations NS = Network SPD = Special Project Delisting	Designated Uses and Categories Summary				Notes	Priority	Potential Pollution Sources	Causes of Impairment	Impaired Cycles
					R1	R2	VA	AP					
												Turbidity	2020, 2018, 2016, 2014, 2012, 2010, 2008, 2006
RÍO MATILDE – PASTILLO	RÍO MATILDE – PASTILLO PRSR64A	43.2	SD	SPD 50119000	4a	4a	5	3	D J L	M	Agriculture Collection System Failure Confined Animal Feeding Operations Landfills Onsite Wastewater Systems Urban Runoff/Storm Sewers	Temperature	2020
RÍO TALLABOA	RÍO TALLABOA PRSR65A	59.6	SD	SPD 50122050	4a	4a	5	1	D J L	M	Agriculture Collection System Failure Minor Municipal Point Sources Onsite Wastewater Systems Urban Runoff/Storm Sewers	pH	2020
												Temperature	2020
RÍO GUAYANILLA	RÍO GUAYANILLA PRSR67A	60.0	SD	NS 50124700	5	5	5	5	F	H	Agriculture Collection System Failure Landfill Minor Industrial Point Sources Minor Municipal Point Sources Onsite Wastewater Systems Urban Runoff/Storm Sewers	Ammonia	2020, 2018, 2014
												Chromium VI	2020
												Dissolved Oxygen	2020, 2016, 2014, 2012, 2008
												Enterococcus	2020, 2018
												Temperature	2020
												Total, Nitrogen	2020, 2018, 2016

2020 Cycle 303(d) List – List of Rivers and Streams Note: The 2020 303(d) List is comprised of the causes of impairments included in assessment cycles 2020, 2018, 2016, 2014, 2012, 2010, 2008 and 2006.													
Basin	Waterbody Name	Waterbody Size (miles)	Class	2020 Monitoring Stations NS = Network SPD = Special Project Delisting	Designated Uses and Categories Summary				Notes	Priority	Potential Pollution Sources	Causes of Impairment	Impaired Cycles
					R1	R2	VA	AP					
												Total, Phosphorus	2020, 2018, 2016, 2012, 2010, 2008
												Turbidity	2020
RÍO YAUCO	RÍO YAUCO PRSR68A1	61.4	SD		4a	4a	5	5	D F H L	M	Agriculture Collection System Failure Landfill Major Municipal Point Sources Minor Industrial Point Sources Onsite Wastewater Systems Urban Runoff/Storm Sewers	Dissolved Oxygen	2014
												Total, Phosphorus	2016, 2012
RÍO LOCO	RÍO LOCO PRSR69A1	92.4	SD	SPD 50129600	4a	4a	5	5	D F	M	Agriculture Collection System Failure Confined Animal Feeding Operation Landfills Minor Industrial Point Sources Onsite Wastewater Systems Urban Runoff/Storm Sewers	Dissolved Oxygen	2020, 2016, 2014, 2012, 2006
												Temperature	2020
												Turbidity	2020
QUEBRADA ZUMBÓN	QUEBRADA ZUMBÓN PRWQ72A	1.7	SD		4a	4a	5	3	D H J, L	M	Collection System Failure Onsite Wastewater Systems	Dissolved Oxygen	2016, 2014
												Surfactants	2012
QUEBRADA GONZÁLEZ	QUEBRADA GONZÁLEZ PRWQ73A	1.8	SD	SPD 50130100	4a	4a	5	3	D J L	M	Onsite Wastewater Systems	Dissolved Oxygen	2020, 2018, 2012

2020 Cycle 303(d) List – List of Rivers and Streams

Note: The 2020 303(d) List is comprised of the causes of impairments included in assessment cycles 2020, 2018, 2016, 2014, 2012, 2010, 2008 and 2006.

Basin	Waterbody Name	Waterbody Size (miles)	Class	2020 Monitoring Stations NS = Network SPD = Special Project Delisting	Designated Uses and Categories Summary				Notes	Priority	Potential Pollution Sources	Causes of Impairment	Impaired Cycles
					R1	R2	VA	AP					
QUEBRADA LOS PAJARITOS	QUEBRADA LOS PAJARITOS PRWQ74A	2.7	SD	SPD 50130150	4a	4a	5	3	D J L	M	Onsite Wastewater Systems	Dissolved Oxygen	2020, 2012
RÍO GUANAJIBO	RÍO GUANAJIBO PRWR77A	119.3	SD	NS 50138000	5	5	5	5	F	H	Collection System Failure Confined Animal Feeding Operations Landfill Major Municipal Point Sources Onsite Wastewater Systems Urban Runoff/Storm Sewers	Chromium VI	2020
												Dissolved Oxygen	2020
												Enterococcus	2020, 2018
												Total, Phosphorus	2020, 2018, 2016
												Turbidity	2018, 2016, 2014, 2012, 2010, 2008
	RÍO ROSARIO PRWR77C	58.3	SD	NS 50136700	5	5	5	5	F	H	Agriculture Collection System Failure Confined Animal Feeding Operations Landfills Minor Municipal Point Sources Onsite Wastewater Systems Urban Runoff/Storm Sewers	Chromium VI	2020
												Enterococcus	2020, 2018
												Pesticides	2012
	RÍO VIEJO PRWR77D	21.1	SD	NS 50135625	5	5	5	5	F	H	Collection System Failure Confined Animal Feeding Operations Onsite Wastewater Systems Urban Runoff/Storm Sewers	Chromium VI	2020
												Dissolved Oxygen	2020, 2018, 2016, 2014, 2012
												Enterococcus	2020, 2018

2020 Cycle 303(d) List – List of Rivers and Streams

Note: The 2020 303(d) List is comprised of the causes of impairments included in assessment cycles 2020, 2018, 2016, 2014, 2012, 2010, 2008 and 2006.

Basin	Waterbody Name	Waterbody Size (miles)	Class	2020 Monitoring Stations NS = Network SPD = Special Project Delisting	Designated Uses and Categories Summary				Notes	Priority	Potential Pollution Sources	Causes of Impairment	Impaired Cycles
					R1	R2	VA	AP					
												Total, Phosphorus	2020, 2018, 2016
												Turbidity	2020, 2018, 2016
	RÍO CUPEYES PRWR77G	8.0	SD		4a	4a	5	5	D F H	H	Agriculture Onsite Wastewater Systems Urban Runoff/Storm Sewers	Pesticides	2012
CAÑO MERLE	CAÑO MERLE PRWK78A	1.6	SD		4a	4a	5	3	D H J L	M	Collection System Failure Surfaces Mining Onsite Wastewater Systems Urban Runoff/Storm Sewers	Dissolved Oxygen	2012
												Surfactants	2012
RÍO YAGÜEZ	RÍO YAGÜEZ PRWR79A	42.2	SD	NS 50139000	5	5	5	1	J	H	Agriculture Collection System Failure Confined Animal Feeding Operations Onsite Wastewater Systems Package Plant (Small Flow) Urban Runoff/Storm Sewers	Chromium VI	2020
												Enterococcus	2020, 2018
RÍO GRANDE DE AÑASCO	RÍO GRANDE DE AÑASCO PRWR83A	126.0	SD	NS 50146000	5	5	5	5	K	H	Agriculture Collection System Failure Confined Animal Feeding Operations Major Municipal Point Sources Minor Industrial Point Sources Onsite Wastewater Systems Urban Runoff/Storm Sewers	Chromium VI	2020
												Copper	2018, 2016
												Enterococcus	2020, 2018
												Total, Phosphorus	2018, 2016
												Turbidity	2020, 2018, 2016, 2014, 2012, 2010

2020 Cycle 303(d) List – List of Rivers and Streams Note: The 2020 303(d) List is comprised of the causes of impairments included in assessment cycles 2020, 2018, 2016, 2014, 2012, 2010, 2008 and 2006.													
Basin	Waterbody Name	Waterbody Size (miles)	Class	2020 Monitoring Stations NS = Network SPD = Special Project Delisting	Designated Uses and Categories Summary				Notes	Priority	Potential Pollution Sources	Causes of Impairment	Impaired Cycles
					R1	R2	VA	AP					
	RÍO PRIETO PRWR83I	59.8	SD		4a	4a	5	5	D H K	H	Agriculture Confined Animal Feeding Operations Onsite Wastewater Systems	Pesticides	2012
QUEBRADA LOS RAMOS	QUEBRADA LOS RAMOS PRWQ89A	6.9	SD	SPD 50146155	3	3	5	3	D L	L	Confined Animal Feeding Operations Landfill Onsite Wastewater Systems	Dissolved Oxygen	2020, 2018, 2012, 2008
QUEBRADA PILETAS	QUEBRADA PILETAS PRWQ91A	2.0	SD		3	3	5	3	D H L	L	Onsite Wastewater Systems	Dissolved Oxygen	2012
RÍO CULEBRINAS	RÍO CULEBRINAS PRWR95A	142.6	SD	NS 50149100	5	5	5	5	K	H	Agriculture Collection System Failure Confined Animal Feeding Operations Landfill Major Municipal Point Sources Minor Industrial Point Sources Minor Municipal Point Sources Onsite Wastewater Systems Urban Runoff/Storm Sewers	Chromium VI	2020
												Copper	2020
												Enterococcus	2020, 2018
												Pesticides	2012
												Total, Nitrogen	2018
												Total, Phosphorus	2020, 2018
												Turbidity	2020, 2018, 2016, 2014, 2012, 2010, 2008, 2006
	QUEBRADA LA SALLE PRWQ95F	11.8	SD		4a	4a	5	5	D H K	H	Agriculture Confined Animal Feeding Operations Onsite Wastewater Systems	Pesticides	2012
												Dissolved Oxygen	2016

2020 Cycle 303(d) List – List of Rivers and Streams Note: The 2020 303(d) List is comprised of the causes of impairments included in assessment cycles 2020, 2018, 2016, 2014, 2012, 2010, 2008 and 2006.													
Basin	Waterbody Name	Waterbody Size (miles)	Class	2020 Monitoring Stations NS = Network SPD = Special Project Delisting	Designated Uses and Categories Summary				Notes	Priority	Potential Pollution Sources	Causes of Impairment	Impaired Cycles
					R1	R2	VA	AP					
	QUEBRADA EL SALTO PRWQ95G	7.8	SD	SPD 50147630	4a	4a	5	3	D K	H	Agriculture Onsite Wastewater Systems	Dissolved Oxygen	2020, 2016
	QUEBRADA GRANDE DE LA MAJAGUA PRWQ95H	5.6	SD		4a	4a	5	5	D H K	H	Agriculture Confined Animal Feeding Operations Onsite Wastewater Systems	Pesticides	2012

Notes:

A - Watershed that has an approved TMDL for Río Cibuco, the TMDL was approved on September 2002, the pollutant was Fecal Coliforms.

B - Watershed that has an approved TMDL for Río de la Plata, the TMDL was approved on September 2003, the pollutant was Fecal Coliforms.

C - Watershed that has an approved TMDL for Río Grande de Loíza, the TMDL was approved on September 2007, the pollutant was Fecal Coliforms.

D - Watershed and sub watershed that do not have a permanent monitoring station but were included in prior cycles as part of the 303(d) list by a synoptic study or a special monitoring project.

E - Watershed that has an approved TMDL for Río Grande de Loíza a TMDL was approved on August 2007, the pollutant was Dissolved Oxygen.

F - Watersheds that have approved TMDL on September 2012, the pollutant was Fecal Coliforms.

G - Watershed that has an approved TMDL. Río Grande de Loíza, the TMDL was approved on August 2007, the pollutant was Copper.

H - If the Monitoring Station column is left blank, the Assessment Unit was not monitored for 2020 cycle.

I - Watershed that has approved TMDL from Río Grande de Loíza, a TMDL was approved on August 2007, the pollutant was Ammonia.

J - Watersheds that have approved TMDL on September 2011, the pollutant was Fecal Coliform.

K - Watersheds that have an approved TMDL on September 2010, the pollutant was Fecal Coliforms. The watersheds are Río Grande de Arecibo, Río Grande de Manatí, Río Grande de Añasco and Río Culebrinas.

L - Watershed and sub watersheds who are or have been under Category 4c, are waterbodies that lack adequate flow, which impaired some of the designated uses.

R1 - Primary Contact Recreation

R2 - Secondary Contact Recreation

AL - Aquatic Life

DW - Raw Sources for Drinking Water

N/A - Not applicable

Priority: H: High Priority: basins including in the Puerto Rico Unified Watershed Assessment and Restoration Activities (PRUWARA), as basins of priority due to the high pollution level related to all the designated uses.

M: Intermediate Priority: basins that were not including in the PRUWARA and have 50% or more of its waters as impaired for some designated use.

L: Low Priority: basins that were not including in the PRUWARA and have less than 50% of its waters as impaired for some designated use.

ESTUARY

Size of waters Impaired by Causes (Monitored Acres for Estuaries)	
Causes of Impairments	**Size of Waters Impaired (mi^2)**
Surfactants	1.0130
Arsenic	0.0364
Dissolved Oxygen	1.1210
Temperature	0.0780
Turbidity	0.2932

2020 Cycle 303(d) List – List of Estuaries

Note: The 2020 303(d) List is comprised of the causes of impairments included in assessments cycles 2020, 2018, 2016, 2014, 2012, 2010, 2008 and 2006.

Basin	Waterbody Name	Waterbody Size mi^2	Class	2020 Monitoring Stations	Designated Uses and Categories Summary				Notes	Priority	Potential Pollution Sources	Causes of Impairment	Impaired Cycles
					R1	R2	VA	AP					
RÍO HERRERA PRER15A	RÍO HERRERA PREE15A	0.102	SB		4a	4a	5	N/A	D F, H	M	Landfill Onsite Wastewater Systems	Surfactants	2012
RÍO ESPÍRITU SANTO PRER16A	RÍO ESPÍRITU SANTO PREE16A	0.5758	SB		4a	4a	5	N/A	D F H	M	Collection System Failure Onsite Wastewater Systems	Surfactants Dissolved Oxygen	2012 2012, 2006
RÍO DEMAJAGUA PRER23A	RÍO DEMAJAGUA PREE23A	0.0028	SB		4a	4a	5	N/A	D H J	M	Collection System Failure Urban Runoff/Storm Sewers	Turbidity	2012
RÍO CANDELERO PRER34A	RÍO CANDELERO PREE34A	0.078	SB		4a	4a	5	N/A	D F H	M	Collection System Failure	Dissolved Oxygen Temperature	2006 2012
RÍO GUAYANÉS PRER35A	RÍO GUAYANÉS PREE35A	0.0364	SB		4a	4a	5	N/A	F H	M	Agriculture Collection System Failure Onsite Wastewater Systems	Arsenic Turbidity	2010, 2008, 2006 2010
CAÑO SANTIAGO PREK35.1	CAÑO SANTIAGO PREE35.1	0.1152	SB		4a	4a	5	N/A	D F H	M	Agriculture Collection System Failure Landfill Major Municipal Point Sources Minor Industrial Point Sources Onsite Wastewater Systems Urban Runoff/Storm Sewers	Surfactants Dissolved Oxygen Turbidity	2012 2012, 2006 2012
RÍO MATILDE-PASTILLO PRSR64A	RÍO MATILDE-PASTILLO PRSE64A	0.0432	SB		4a	4a	5	N/A	D H J, L	M	Onsite Wastewater Systems Urban Runoff/Storm Sewers	Turbidity	2012
RÍO TALLABOA PRSR65A	RÍO TALLABOA PRSE65A	0.0336	SB		4a	4a	5	N/A	D H J, L	M	Onsite Wastewater Systems Urban Runoff/Storm Sewers	Turbidity	2012
CAÑO MERLE	CAÑO MERLE	0.158	SB		4a	4a	5	N/A	D	M	Collection System Failure	Surfactants	2014

2020 Cycle 303(d) List – List of Estuaries

Note: The 2020 303(d) List is comprised of the causes of impairments included in assessments cycles 2020, 2018, 2016, 2014, 2012, 2010, 2008 and 2006.

Basin	Waterbody Name	Waterbody Size mi^2	Class	2020 Monitoring Stations	Designated Uses and Categories Summary				Notes	Priority	Potential Pollution Sources	Causes of Impairment	Impaired Cycles
					R1	R2	VA	AP					
PRWK78A	PRWE78A								H J, L				
CAÑO BOQUILLA PRWK82A	CAÑO BOQUILLA PRWE82A	0.062	SB		3	3	5	N/A	D, H, L	L	Onsite Wastewater Systems	Surfactants	2012
												Dissolved Oxygen	2012
												Turbidity	2012
QUEBRADA GRANDE DE CALVACHE PRWQ88A	QUEBRADA GRANDE DE CALVACHE PRWE88A	0.002	SB		4a	4a	5	N/A	D H L O	M	Urban Runoff/Storm Sewers	Dissolved Oxygen	2016, 2012, 2008
RÍO GUAYABO PRWR94A	RÍO GUAYABO PRWE94A	0.0288	SB		4a	4a	5	N/A	D H J	M	Onsite Wastewater Systems Urban Runoff/Storm Sewers	Dissolved Oxygen	2012, 2008

Notes:

D - Watershed and sub watershed that do not have a permanent monitoring station but were included in prior cycles as part of the 303(d) list by a synoptic study or a special monitoring project.

F - Watersheds that have approved TMDL on September 2012, the pollutant was Fecal Coliforms.

H - If the Monitoring Station column is left blank, the Assessment Unit was not monitored for 2020 cycle.

J - Watersheds that have approved TMDL on September 2011, the pollutant was Fecal Coliform.

L - Watershed and sub watersheds who are or have been under Category 4c, are waterbodies that lack adequate flow, which impaired some of the designated uses.

O - Watershed that have approved TMDL on February 2012, the pollutant was Fecal Coliforms.

R1 - Primary Contact Recreation

R2 - Secondary Contact Recreation

AL - Aquatic Life

DW - Raw Source for Drinking Water

N/A- Not applicable

Priority: M: Intermediate Priority: basins that were not including in the PRUWARA and have 50% or more of its waters as impaired for some designated use.

L: Low Priority: basins that were not including in the Puerto Rico Unified Watershed Assessment and Restoration Activities (PRUWARA) and have less than 50% of its waters as impaired for some designated use.

SAN JUAN BAY ESTUARY

Size of waters Impaired by Causes San Juan Bay Estuary System	
Causes of Impairments	**Size of Waters Impaired (mi^2, miles)**
Surfactants	3.8340 mi^2, 18.8 mi
Arsenic	18.8 mi
Copper	0.1009 mi^2, 18.8 mi
Chromium	3.8340 mi^2
Lead	0.1009 mi^2, 18.8 mi
Mercury	18.8 mi
Selenium	18.8 mi
Ammonia	3.8340 mi^2
Total, Nitrogen	3.8340 mi^2
Total, Phosphorous	3.8340 mi^2, 18.8 mi
pH	3.7331 mi^2, 18.8 mi
Dissolved Oxygen	3.8340 mi^2, 18.8 mi
Temperature	3.8340 mi^2, 18.8 mi
Enterococcus	3.8340 mi^2, 18.8 mi
Fecal Coliforms	3.7331 mi^2
Oil and Grease	3.8340 mi^2, 18.8 mi
Turbidity	3.8340 mi^2, 18.8 mi

2020 Cycle 303(d) List – List of San Juan Bay Estuary System

Note: The 2020 303(d) List is comprised of the causes of impairments included in assessment cycles 2020, 2018, 2016, 2014, 2012, 2010, 2008 and 2006.

Basin	Waterbody Name	Waterbody Size (mi², miles)	Class	2020 Monitoring Stations NS = Network ED = External Data	Designated Uses and Categories Summary				Notes	Priority	Potential Pollution Sources	Causes of Impairment	Impaired Cycles
					R1	R2	VA	AP					
ESTUARY SYSTEM	**PREE13A1** Caño Control de La Malaria Bahía de San Juan Caño San Antonio Laguna Del Condado Península La Esperanza	18.8 miles		ED-BSJ 1, 2, 3 LC 1, 2 CSA La Malaria PLE	5	5	5	N/A	F M	M	Collection System Failure Confined Animal Feeding Operations Major Industrial Point Sources Major Municipal Point Sources Marinas and Recreational Boating Minor Industrial Point Sources Onsite Wastewater Systems Urban Runoff/Storm Sewers	Surfactants	2006
												Arsenic	2006
												Copper	2006
												Lead	2006
												Mercury	2006
												Selenium	2006
												Total, Phosphorus	2018
												pH	2018, 2016, 2014, 2012, 2006
												Dissolved Oxygen	2018, 2016, 2014, 2012, 2010, 2006
												Temperature	2018, 2016, 2014, 2006
												Enterococcus	2018, 2016, 2014, 2012
												Oil & Grease	2018, 2016, 2014, 2012, 2010
												Turbidity	2018, 2016, 2014, 2012, 2010
	PREE13A2 Río Piedras Lago Las Curías	0.1009 mi^2		NS 89027 50049100	5	5	5	5	F M	H	Collection System Failure Confined Animal Feeding Operations Landfill	Surfactants	2020
												Copper	2020
												Chromium VI	2020
												Lead	2020

2020 Cycle 303(d) List – List of San Juan Bay Estuary System

Note: The 2020 303(d) List is comprised of the causes of impairments included in assessment cycles 2020, 2018, 2016, 2014, 2012, 2010, 2008 and 2006.

Basin	Waterbody Name	Waterbody Size (mi^2, miles)	Class	2020 Monitoring Stations NS = Network ED = External Data	Designated Uses and Categories Summary				Notes	Priority	Potential Pollution Sources	Causes of Impairment	Impaired Cycles
					R1	R2	VA	AP					
				ED-RP 01, 02, 03 RPN Lago Las Curias							Urban Runoff/Storm Sewers	Ammonia	2020, 2014, 2012, 2010, 2008, 2006
												Total, Phosphorus	2020, 2018, 2016
												Total, Nitrogen	2020, 2018, 2016
												Dissolved Oxygen	2020, 2018, 2016, 2014, 2012, 2010, 2008, 2006
												Temperature	2018, 2016, 2014
												Enterococcus	2020, 2018
												Oil & Grease	2018, 2016, 2014, 2012, 2010
												Turbidity	2020, 2018, 2014, 2012, 2010, 2008, 2006
	PREE13A3 Caño Martín Peña Quebrada Juan Méndez Quebrada San Antón Quebrada	3.7331 mi^2	SD	NS 50050300 ED - CS 1, 2 CMP LSJ 1, 2 Blasina San Antón	5	5	5	N/A	M	H	Collection System Failure Confined Animal Feeding Operations Onsite Wastewater Systems Urban Runoff/Storm Sewers	Surfactants	2020, 2016
												Chromium VI	2020
												Ammonia	2020, 2018, 2016
												Total, Phosphorus	2020, 2018, 2016
												Total, Nitrogen	2020, 2018, 2016

2020 Cycle 303(d) List – List of San Juan Bay Estuary System

Note: The 2020 303(d) List is comprised of the causes of impairments included in assessment cycles 2020, 2018, 2016, 2014, 2012, 2010, 2008 and 2006.

Basin	Waterbody Name	Waterbody Size (mi^2, miles)	Class	2020 Monitoring Stations NS = Network ED = External Data	Designated Uses and Categories Summary				Notes	Priority	Potential Pollution Sources	Causes of Impairment	Impaired Cycles
					R1	R2	VA	AP					
	Blasina Canal Machicote Canal Suárez Laguna San José Laguna Torrecillas Laguna de Piñones Laguna Los Corozos			Laguna Los Corozos Laguna Torrecillas 1, 2, 3								pH	2018, 2016, 2014, 2012, 2010, 2006
												Dissolved Oxygen	2020, 2018, 2016, 2014, 2012, 2010, 2008, 2006
												Temperature	2018, 2016, 2014, 2012
												Fecal Coliform	2016, 2014, 2012, 2010, 2008, 2006
												Enterococcus	2020, 2018, 2014, 2012
												Oil & Grease	2018, 2016, 2014, 2012, 2010
												Turbidity	2018, 2016, 2014, 2012, 2010, 2006

Notes:

F - Watersheds that have approved TMDL on September 2012, the pollutant was Fecal Coliforms.
M- External Data
R1 - Primary Contact Recreation
R2 - Secondary Contact Recreation
AL - Aquatic Life **DW** - Raw Sources for Drinking Water
N/A - Not applicable
Priority: H: High Priority: basins including in the Puerto Rico Unified Watershed Assessment and Restoration Activities (PRUWARA), as basins of priority due to the high pollution level related to all the designated uses.
M: Intermediate Priority: basins that were not including in the PRUWARA and have 50% or more of its waters as impaired for some designated use.
L: Low Priority: basins that were not including in the PRUWARA and have less than 50% of its waters as impaired for some designated use.

LAGOONS

Size of waters Impaired by Causes (Monitored Acres for Lagoons)	
Causes of Impairments	**Size of Waters Impaired (mi^2)**
Copper	2.6172
pH	1.2703
Dissolved Oxygen	3.8781
Temperature	0.4016
Enterococcus	0.5250
Turbidity	1.4344

2020 Cycle 303(d) List – List of Lagoons

Note: The 2020 303(d) List is comprised of the impairments included in assessment cycles 2020, 2018, 2016, 2014, 2012, 2010, and 2008.

Waterbody Name	AU - ID	Waterbody Size (mi^2)	Class	2020 Monitoring Stations	Designated Uses and Categories Summary			Notes	Priority	Potential Pollution Sources	Causes of Impairment	Impaired Cycles
					R1	R2	VA					
LAGUNA JOYUDAS	PRWN0005	0.5297	SB		4a	4a	5	H J	M	Onsite Wastewater Systems Unknown Source Urban Runoff/Storm Sewers	Copper	2014
											Dissolved Oxygen	2014
LAGUNA TORTUGUERO	PRNN0006	0.8656	SB		3	3	5	H	L	Onsite Wastewater Systems Urban Runoff/Storm Sewers	Dissolved Oxygen	2014, 2012
LAGUNA MATA REDONDA	PRNN0007	0.0234	SB		3	3	5	H	L	Urban Runoff/Storm Sewers	pH	2014
											Dissolved Oxygen	2014
LAGUNA AGUAS PRIETAS	PREN0011	0.2	SB		3	3	5	H	L	Unknown Source	Copper	2014
											Dissolved Oxygen	2014
											Turbidity	2014
LAGUNA GRANDE	PREN0012	0.3375	SB		5	5	5	H	M	Marinas and Recreational Boating Onsite Wastewater Systems Urban Runoff/Storm Sewers	pH	2008
											Dissolved Oxygen	2014, 2008
											Enterococcus	2014
LAGUNA CEIBA	PREN0013	0.1875	SB		5	5	5	H	M	Unknown Sources	Copper	2014
											pH	2014
											Dissolved Oxygen	2014
											Enterococcus	2014
LAGUNA POZUELO	PRSN0014	0.0547	SB		3	3	5	H	L	Unknown Source Urban Runoff/Storm Sewers	Copper	2014
											pH	2014
											Dissolved Oxygen	2014
											Temperature	2014
LAGUNA MAR NEGRO	PRSN0015	0.325	SB		3	3	5	H	L	Unknown Source Urban Runoff/Storm Sewers	Copper	2014
											pH	2014

2020 Cycle 303(d) List – List of Lagoons

Note: The 2020 303(d) List is comprised of the impairments included in assessment cycles 2020, 2018, 2016, 2014, 2012, 2010, and 2008.

Waterbody Name	AU - ID	Waterbody Size (mi^{2})	Class	2020 Monitoring Stations	Designated Uses and Categories Summary			Notes	Priority	Potential Pollution Sources	Causes of Impairment	Impaired Cycles
					R1	R2	VA					
											Dissolved Oxygen	2014
LAGUNA PUNTA ARENAS	PRSN0016	0.0281	SB		3	3	5	H	L	Unknown Source Urban Runoff/Storm Sewers	Copper	2014
											Dissolved Oxygen	2014
											Temperature	2014
											Turbidity	2014
LAGUNA TIBURONES	PRSN0017	0.0219			3	3	5	H	L	Landfill Unknown Source	Copper	2014
											pH	2014
											Dissolved Oxygen	2014
											Temperature	2014
											Turbidity	2014
LAGUNA SALINAS	PRSN0018	0.1203			3	3	5	H	L	Onsite Wastewater Systems Unknown Source	Copper	2014
											Dissolved Oxygen	2014
LAGUNA SALINAS I (FRATERNIDAD)	PRSN0019	0.4594			3	3	5	H	L	Onsite Wastewater Systems Unknown Source	Copper	2014
											Dissolved Oxygen	2014
											Turbidity	2014
LAGUNA CABO ROJO 2 (CANDELARIA)	PRSN0020	0.2969	SB		3	3	5	H	L	Unknown Source	Copper	2014
											Dissolved Oxygen	2014
											Temperature	2014
											Turbidity	2014
LAGUNA CABO ROJO 3 (EL FARO)	PRSN0021	0.1078	SB		3	3	5	H	L	Unknown Source	Copper	2014
											Dissolved Oxygen	2014
											Turbidity	2014
CAÑO BOQUERÓN	PRSN0022	0.2859	SB		3	3	5	H	L		Copper	2014

2020 Cycle 303(d) List – List of Lagoons

Note: The 2020 303(d) List is comprised of the impairments included in assessment cycles 2020, 2018, 2016, 2014, 2012, 2010, and 2008.

Waterbody Name	AU - ID	Waterbody Size (mi^2)	Class	2020 Monitoring Stations	Designated Uses and Categories Summary			Notes	Priority	Potential Pollution Sources	Causes of Impairment	Impaired Cycles
					R1	R2	VA					
										Marinas and Recreational Boating Minor Industrial Point Sources	pH	2014
											Dissolved Oxygen	2014
											Turbidity	2014
LAGUNA GUANIQUILLA	PRSN0023	0.0344	SB		3	3	5	H	L	Unknown Source	pH	2014
											Dissolved Oxygen	2014
											Turbidity	2014

Notes:

H - If the Monitoring Station column is left blank, the Assessment Unit was not monitored for 2020 cycle.

J - Watersheds that have approved TMDL on September 2011, the pollutant was Fecal Coliform.

R1 - Primary Contact Recreation

R2 - Secondary Contact Recreation

AL - Aquatic Life

Priority: L: Low Priority: basins that were not including in the Puerto Rico Unified Watershed Assessment and Restoration Activities (PRUWARA) and have less than 50% of its waters as impaired for some designated use.

LAKES

Size of waters Impaired by Causes (Monitored acres/miles for Lakes)	
Causes of Impairments	**Size of Waters Impaired (acres)**
Pesticides	2,133
Surfactants	634
Arsenic	1,194
Copper	2,500
Lead	1,726
Mercury	35
Total, Phosphorus	7,269
Total, Nitrogen	6,516
pH	6,266
Dissolved Oxygen	7,288
Enterococcus	35
Temperature	3,254
Turbidity	2,458

2020 Cycle 303(d) List – List of Lakes

Note: The 2020 303(d) List is comprised of the impairments included in assessments cycles 2020, 2018, 2016, 2014, 2012, 2010, 2008 and 2006.

Basin	Waterbody Name	Waterbody Size (acres)	Class	2020 Monitoring Stations NS = Network	Designated Uses and Categories Summary				Notes	Priority	Potential Pollution Sources	Causes of Impairment	Impaired Cycles
					R1	R2	VA	AP					
RÍO GUAJATACA	LAGO GUAJATACA PRNL3A1	1000	SD	NS 10720 10790 10790C	4a	4a	5	5	F	H	Confined Animal Feeding Operations Onsite Wastewater Systems Package Plant (small flows) Unknown Source	Dissolved Oxygen	2020, 2018, 2016, 2014, 2012, 2010, 2008, 2006
												pH	2020, 2016
												Temperature	2020
												Total, Nitrogen	2020
												Total, Phosphorus	2020, 2018
RÍO GRANDE DE ARECIBO	LAGO DOS BOCAS PRNL$_1$7A1	634	SD	NS 25110 27090 27090E	4a	4a	5	5	K N	H	Agriculture Confined Animal Feeding Operations Minor Industrial Point Sources Onsite Wastewater Systems Unknown Source	Arsenic	2006
												Copper	2006
												Dissolved Oxygen	2020, 2018, 2016, 2014, 2012, 2010, 2008, 2006
												pH	2020, 2018, 2016, 2012
												Surfactants	2006
												Temperature	2020
												Total, Nitrogen	2020, 2018
												Total, Phosphorus	2020, 2018
												Turbidity	2020
RÍO GRANDE DE ARECIBO	LAGO CAONILLAS PRNL$_2$7C1	700	SD	NS 89001 89002 89003	4a	4a	5	5	K	H	Agriculture Onsite Wastewater Systems	Copper	2020, 2012
												Dissolved Oxygen	2020, 2018, 2016, 2014, 2012, 2010, 2008, 2006
												Pesticides	2008

2020 Cycle 303(d) List – List of Lakes

Note: The 2020 303(d) List is comprised of the impairments included in assessments cycles 2020, 2018, 2016, 2014, 2012, 2010, 2008 and 2006.

Basin	Waterbody Name	Waterbody Size (acres)	Class	2020 Monitoring Stations NS = Network	Designated Uses and Categories Summary				Notes	Priority	Potential Pollution Sources	Causes of Impairment	Impaired Cycles
					R1	R2	VA	AP					
												pH	2020
												Total, Nitrogen	2020
												Total, Phosphorus	2020, 2018
RÍO GRANDE DE ARECIBO	LAGO GARZAS PRNL$_3$7A3	108	SD	NS 20050	4a	4a	5	5	K	H	Agriculture Onsite Wastewater Systems Unknown Source	Copper	2020
												Dissolved Oxygen	2020, 2018, 2016, 2014, 2012, 2010, 2006
												Lead	2020
												Pesticides	2008
												pH	2018
												Total, Phosphorus	2018
RÍO GRANDE DE MANATÍ	LAGO GUINEO PRNL$_1$8C1	54	SD		4a	4a	5	5	H K	H	Agriculture Onsite Wastewater Systems	Dissolved Oxygen	2012, 2010, 2006
												Pesticides	2008
RÍO GRANDE DE MANATÍ	LAGO MATRULLAS PRNL$_2$8C1	77	SD	NS 89009 89010	4a	4a	5	5	K	H	Agriculture Confined Animal Feeding Operations Onsite Wastewater Systems Unknown Source	Copper	2020
												Dissolved Oxygen	2020, 2018, 2016, 2014, 2012, 2010
												Lead	2020
												pH	2020, 2018, 2014, 2012, 2010, 2006
												Total, Nitrogen	2020
												Total, Phosphorus	2020, 2018
			SD		4a	4a	5	5	B	H	Collection System Failure	Arsenic	2006

2020 Cycle 303(d) List – List of Lakes

Note: The 2020 303(d) List is comprised of the impairments included in assessments cycles 2020, 2018, 2016, 2014, 2012, 2010, 2008 and 2006.

Basin	Waterbody Name	Waterbody Size (acres)	Class	2020 Monitoring Stations NS = Network	Designated Uses and Categories Summary				Notes	Priority	Potential Pollution Sources	Causes of Impairment	Impaired Cycles
					R1	R2	VA	AP					
RÍO DE LA PLATA	LAGO DE LA PLATA PREL$_1$10A1	560		NS 44400 44950 44950C					N		Confined Animal Feeding Operations Landfill Onsite Wastewater Systems	Dissolved Oxygen	2020, 2018, 2016, 2014, 2012, 2010, 2008, 2006
												Lead	2020
												pH	2020, 2018, 2016
												Temperature	2020
												Total, Nitrogen	2020
												Total, Phosphorus	2020, 2018, 2016, 2006
												Turbidity	2016
RÍO DE LA PLATA	LAGO CARITE PREL$_2$10A5	333	SD	NS 39900 39950 39950C	4a	4a	5	5	B	H	Confined Animal Feeding Operations Onsite Wastewater Systems	Dissolved Oxygen	2020, 2018, 2016, 2014, 2012, 2010, 2006
												pH	2020
												Total, Phosphorus	2020, 2018
RÍO BAYAMÓN	LAGO CIDRA PREL12A2	268	SD	NS 89029 89030 89031	4a	4a	5	5	F	H	Collection System Failure Confined Animal Feeding Operations Minor Industrial Point Sources Onsite Wastewater Systems	Copper	2020
												Dissolved Oxygen	2020, 2018, 2016, 2014, 2012, 2010, 2008, 2006
												Lead	2020
												Total, Nitrogen	2020
												Total, Phosphorus	2020, 2018

2020 Cycle 303(d) List – List of Lakes

Note: The 2020 303(d) List is comprised of the impairments included in assessments cycles 2020, 2018, 2016, 2014, 2012, 2010, 2008 and 2006.

Basin	Waterbody Name	Waterbody Size (acres)	Class	2020 Monitoring Stations NS = Network	Designated Uses and Categories Summary				Notes	Priority	Potential Pollution Sources	Causes of Impairment	Impaired Cycles
					R1	R2	VA	AP					
RÍO GRANDE DE LOIZA	LAGO LOIZA PREL14A1	713	SD	NS 57500 58800 58800D	4a	4a	5	5	C	H	Collection System Failure Confined Animal Feeding Operations Onsite Wastewater Systems Urban Runoff/Storm Sewers	Copper	2020, 2014, 2012
												Dissolved Oxygen	2020, 2018, 2016, 2014, 2012, 2010, 2008
												Lead	2012
												pH	2020
												Temperature	2020
												Total, Nitrogen	2020, 2018
												Total, Phosphorus	2020, 2018
												Turbidity	2020, 2018, 2016, 2014, 2012, 2010, 2008
RÍO GRANDE DE PATILLAS	LAGO PATILLAS PRSL43A1	312	SD	NS 89022 89023 89024	4a	4a	5	5	J	H	Agriculture Onsite Wastewater Systems Unknown Source	Dissolved Oxygen	2020, 2018, 2016, 2014, 2012, 2010, 2008, 2006
												pH	2020
												Pesticides	2008
												Temperature	2020
												Total, Phosphorus	2020, 2018
QUEBRADA MELANÍA	LAGO MELANÍA PRSL50A	35	SD	NS 89026	4a	4a	5	5	J	M	Agriculture Onsite Wastewater Systems Unknown Source	Enterococcus	2020
												Mercury	2020
												Pesticides	2008
												Temperature	2020

2020 Cycle 303(d) List – List of Lakes

Note: The 2020 303(d) List is comprised of the impairments included in assessments cycles 2020, 2018, 2016, 2014, 2012, 2010, 2008 and 2006.

Basin	Waterbody Name	Waterbody Size (acres)	Class	2020 Monitoring Stations NS = Network	Designated Uses and Categories Summary				Notes	Priority	Potential Pollution Sources	Causes of Impairment	Impaired Cycles
					R1	R2	VA	AP					
												Total, Nitrogen	2020
												Total, Phosphorus	2020, 2018
RÍO JACAGUAS	LAGO GUAYABAL PRSL$_1$60A1	373	SD	NS 89011 89012 89013	4a	4a	5	5	F	M	Agriculture Collection System Failure Minor Industrial Point Sources Onsite Wastewater Systems	Dissolved Oxygen	2020, 2018, 2016, 2014, 2012, 2010, 2008, 2006
												Pesticides	2008
												pH	2020
												Total, Nitrogen	2020
												Total, Phosphorus	2020, 2018
RÍO JACAGUAS	LAGO TOA VACA PRSL$_2$60A1	836	SD	NS 89014 89015 89016	4a	4a	5	5	F	M	Agriculture Onsite Wastewater Systems	Dissolved Oxygen	2020, 2018, 2016, 2014, 2012, 2010, 2008
												pH	2020, 2016
												Total, Nitrogen	2020
												Total, Phosphorus	2020, 2018
												pH	2020, 2016
RÍO BUCANÁ-CERRILLOS	LAGO CERRILLOS PRSL62A1	700	SD	NS 89032 89033 89034	4a	4a	5	5	J	M	Unknown Source Urban Runoff/Storm Sewers	Dissolved Oxygen	2020, 2018, 2016, 2014, 2012, 2010, 2008, 2006
												Total, Nitrogen	2020
												Total, Phosphorus	2020, 2018

2020 Cycle 303(d) List – List of Lakes

Note: The 2020 303(d) List is comprised of the impairments included in assessments cycles 2020, 2018, 2016, 2014, 2012, 2010, 2008 and 2006.

Basin	Waterbody Name	Waterbody Size (acres)	Class	2020 Monitoring Stations NS = Network	Designated Uses and Categories Summary				Notes	Priority	Potential Pollution Sources	Causes of Impairment	Impaired Cycles
					R1	R2	VA	AP					
RIO YAUCO	LAGO LUCHETTI PRSL68A1	266	SD	NS 89017 89018 89019	4a	4a	5	5	F	M	Agriculture Onsite Wastewater Systems	Dissolved Oxygen	2020, 2018, 2016, 2014, 2012, 2010, 2008, 2006
												pH	2020, 2018
												Pesticides	2008
												Total, Nitrogen	2020
												Total, Phosphorus	2020, 2018
												Turbidity	2020
RÍO LOCO	LAGO LOCO PRSL69A	69	SD	NS 89021C	4a	4a	5	5	F	M	Onsite Wastewater Systems	Dissolved Oxygen	2020, 2018, 2016, 2014, 2012, 2010, 2008
												pH	2020
												Total, Nitrogen	2020
												Total, Phosphorus	2020, 2018
RÍO GRANDE DE AÑASCO	LAGO GUAYO PRWL83H	285	SD	NS 89004 89005 89006	4a	4a	5	5	K	H	Agriculture Confined Animal Feeding Operations Major Industrial Point Sources Minor Municipal Point Sources Onsite Wastewater Systems	Dissolved Oxygen	2020, 2018, 2016, 2014, 2012, 2010, 2008, 2006
												Pesticides	2008
												pH	2020, 2018
												Total, Nitrogen	2020, 2018
												Total, Phosphorus	2020, 2018
												Turbidity	2020

Notes:

B - Watershed that has an approved TMDL for Río de la Plata, the TMDL was approved on September 2003, the pollutant was Fecal Coliforms.
C - Watershed that has an approved TMDL for Río Grande de Loíza, the TMDL was approved on September 2007, the pollutant was Fecal Coliforms.
F - Watersheds that have approved TMDL on September 2012, the pollutant was Fecal Coliforms.
H - If the Monitoring Station column is left blank, the Assessment Unit was not monitored for 2020 cycle.
J - Watersheds that have approved TMDL on September 2011, the pollutant was Fecal Coliform.
K - Watersheds that have an approved TMDL on September 2010, the pollutant was Fecal Coliforms. The watersheds are Río Grande de Arecibo, Río Grande de Manatí, Río Grande de Añasco and Río Culebrinas.
N- Remains in 2020 303 (d) List due to old segmentation evaluation.
R1 - Primary Contact Recreation
R2 - Secondary Contact Recreation
AL - Aquatic Life
DW - Raw Source for Drinking Water
Priority: H: High Priority: basins including in the Puerto Rico Unified Watershed Assessment and Restoration Activities (PRUWARA), as basins of priority due to the high pollution level related to all the designated uses.
M: Intermediate Priority: basins that were not including in the PRUWARA and have 50% or more of its waters as impaired for some designated use.

COASTAL SHORELINE

Size of Waters Impaired by Causes Coastal Shoreline	
Causes of Impairment	**Size of Waters Impaired (miles)**
Nickel	170.90
Thallium	203.74
Arsenic	49.19
Copper	380.83
Lead	152.17
Mercury	213.37
Zinc	43.8
pH	176.26
Dissolved Oxygen	118.61
Temperature	249.74
Enterococcus	277.18
Fecal Coliforms	7.79
Turbidity	422.37
Oil and Grease	82.42

2020 Cycle 303(d) List – List of Coastal Shoreline

Note: The 2020 303(d) List is comprised of the causes of impairments included in assessment cycles 2020, 2018, 2016, 2014, 2012, 2010 and 2008.

Assessment Unit ID (AU)	Size of AU (miles)	Class	2020 Monitoring Stations NS = Network ED = External Data	Designated Uses and Categories Summary			Notes	Priority	Potential Pollution Sources	Causes of Impairment	Years Impaired
				R1	R2	VA					
PRNC01 Punta Borinquén to Punta Sardina	11.75	SB	NS MAC-044, SBZ-003, SBZ-004, SBZ-005	1	1	5		L	Onsite Wastewater Systems	Copper	2020
										Thallium	2020
PRNC02 Punta Sardina to Punta Manglillo	14.10	SB	NS MAC-047 MAC-086 SBZ-006	5	5	5		L	Major Industrial Point Sources Onsite Wastewater Systems Urban Runoff/Storm Sewers	Copper	2020, 2018
										Thallium	2020
										Lead	2020
										Enterococci	2020, 2018, 2014, 2010
										Turbidity	2020, 2018, 2016, 2014, 2012
PRNC03 Punta Manglillo to Punta Morrillos	9.65	SB	NS SBZ-007 SEG3-01	5	5	5		L	Collection System Failure Onsite Wastewater Systems Upstream Impoundment Urban Runoff/Storm Sewers	Copper	2020
										Enterococci	2020,2018
										Temperature	2020
										Turbidity	2018, 2016
PRNC04 Punta Morrillos to Punta Manatí	13.66	SB	NS MAC-049 MAC-055 SBZ-008	5	5	5		L	Collection System Failure Onsite Wastewater Systems Upstream Impoundment Urban Runoff/Storm Sewers	Copper	2020, 2018
										Mercury	2020
										Nickel	2020
										Dissolved Oxygen	2016
										Enterococci	2018
										pH	2018
										Thallium	2020, 2018
										Turbidity	2020, 2018, 2016, 2014, 2012
PRNC05	7.46	SB	NS	5	5	5		L	Unknown Source	Copper	2020, 2018

2020 Cycle 303(d) List – List of Coastal Shoreline

Note: The 2020 303(d) List is comprised of the causes of impairments included in assessment cycles 2020, 2018, 2016, 2014, 2012, 2010 and 2008.

Assessment Unit ID (AU)	Size of AU (miles)	Class	2020 Monitoring Stations NS = Network ED = External Data	Designated Uses and Categories Summary			Notes	Priority	Potential Pollution Sources	Causes of Impairment	Years Impaired
				R1	R2	VA					
Punta Manatí to Punta Chivato			SBZ-010 SEG5-01							Mercury	2020
										Thallium	2020
										Enterococci	2020, 2018
										pH	2020, 2018
										Temperature	2020
										Turbidity	2018
PRNC06 Punta Chivato to Punta Cerro Gordo	3.23	SB	NS MAC-087 RW23	5	5	5		L	Onsite Wastewater Systems Unknown Source Urban Runoff/Storm Sewers	Copper	2018
										Mercury	2020
										Enterococci	2020, 2018
										Temperature	2020
										Turbidity	2018
PRNC07 Punta Puerto Nuevo to Punta Cerro Gordo	5.05	SB	NS MAC-088 SEG7-01 RW-17	1	1	5	K	L	Onsite Wastewater Systems Unknown Source Urban Runoff/Storm Sewers	Copper	2020, 2018
										Mercury	2018
										pH	2020
										Temperature	2020
										Turbidity	2020, 2018
PRNC08 Punta Cerro Gordo to Punta Boca Juana	7.32	SB	NS SBZ-013 SBZ-014 RW-18	5	5	5		L	Onsite Wastewater Systems Unknown Source Urban Runoff/Storm Sewers	Arsenic	2020
										Lead	2020
										Copper	2020, 2018
										Nickel	2020
										Zinc	2020
										Enterococci	2020, 2018
										Turbidity	2020, 2018, 2016
PREC09 Punta Boca Juana to Punta Salinas	5.78	SB	NS MAC-077 SEG9-01 RW-19	1	1	5		L	Onsite Wastewater Systems Unknown Source Urban Runoff/Storm Sewers	Arsenic	2020
										Copper	2020, 2018
										Lead	2020
										Nickel	2020, 2018
										Turbidity	2020, 2018, 2016

2020 Cycle 303(d) List – List of Coastal Shoreline

Note: The 2020 303(d) List is comprised of the causes of impairments included in assessment cycles 2020, 2018, 2016, 2014, 2012, 2010 and 2008.

Assessment Unit ID (AU)	Size of AU (miles)	Class	2020 Monitoring Stations NS = Network ED = External Data	Designated Uses and Categories Summary			Notes	Priority	Potential Pollution Sources	Causes of Impairment	Years Impaired
				R1	R2	VA					
PREC10B Punta Salinas to Rio Bayamón Mouth	2.91	SB	NS MAC-063	5	5	5		L	Major Industrial Point Sources Onsite Wastewater Systems Urban Runoff/Storm Sewers	Copper	2020, 2018
										Enterococci	2020, 2018, 2016, 2014
										Lead	2020, 2018
										Mercury	2020, 2018
										Nickel	2020, 2018
										Turbidity	2020, 2018, 2016, 2014
PREC10C Rio Bayamón Mouth to Isla de Cabras	6.63	SB	NS SEG10C-01 SEG10C-02	5	5	5		L	Major Industrial Point Sources Onsite Wastewater Systems Urban Runoff/Storm Sewers	Copper	2020, 2018
										Enterococci	2020, 2018
										Lead	2020, 2018
										Mercury	2020, 2018
										Nickel	2020, 2018
										Zinc	2020
										Thallium	2020
										pH	2018
										Temperature	2020
										Turbidity	2020 ,2018, 2016
PREC11 Isla de Cabras to Punta Del Morro	7.79	SB		5	5	5	H	L	Major Industrial Point Sources Major Municipal Point Sources Minor Municipal Point Sources Marinas and Recreational Boating Onsite Wastewater Systems Urban Runoff/Storm Sewers	Arsenic	2010
										Copper	2010
										Dissolved Oxygen	2010
										Fecal Coliform	2010

2020 Cycle 303(d) List – List of Coastal Shoreline

Note: The 2020 303(d) List is comprised of the causes of impairments included in assessment cycles 2020, 2018, 2016, 2014, 2012, 2010 and 2008.

Assessment Unit ID (AU)	Size of AU (miles)	Class	2020 Monitoring Stations NS = Network ED = External Data	Designated Uses and Categories Summary			Notes	Priority	Potential Pollution Sources	Causes of Impairment	Years Impaired
				R1	R2	VA					
PREC13 East side of Condado Bridge to Punta Las Marías	4.31	SB	NS B-1 B-2 RW-26 RW-27	5	5	5		L	Urban Runoff/Storm Sewers	Copper	2020
										Enterococci	2020, 2018
										Lead	2020
										Mercury	2020
										Thallium	2020
										Temperature	2020
										Turbidity	2020, 2018, 2016
PREC14 Punta Las Marías to Punta Cangrejos	4.19	SB	NS EB-40, B-3, SEG14-01 SEG14-02, RW-21C	1	1	5		L	Marinas and Recreational Boating Urban Runoff/Storm Sewers	Arsenic	2020
										Lead	2020
										Copper	2020
										Thallium	2020
										Temperature	2020
										Turbidity	2020, 2018, 2016, 2014
PREC15 Punta Cangrejos to Punta Vacía Talega	6.23	SB	NS SBZ-024 SBZ-026	5	5	5		L	Onsite Wastewater Systems Urban Runoff/Storm Sewers	Arsenic	2020
										Copper	2020
										Mercury	2020
										Nickel	2020
										Thallium	2020
										Enterococci	2020, 2018
										Turbidity	2020, 2018, 2016
PREC16 Punta Vacía Talega to Punta Miquillo	9.46	SB	NS SBZ-027 SBZ-028	5	5	5		L	Onsite Wastewater Systems Urban Runoff/Storm Sewers	Arsenic	2020
										Mercury	2020
										Copper	2020
										Lead	2020
										Nickel	2020
										Thallium	2020
										Zinc	2020
										Temperature	2020
										Enterococci	2020, 2018
										Turbidity	2020, 2018, 2016

2020 Cycle 303(d) List – List of Coastal Shoreline

Note: The 2020 303(d) List is comprised of the causes of impairments included in assessment cycles 2020, 2018, 2016, 2014, 2012, 2010 and 2008.

Assessment Unit ID (AU)	Size of AU (miles)	Class	2020 Monitoring Stations NS = Network ED = External Data	Designated Uses and Categories Summary			Notes	Priority	Potential Pollution Sources	Causes of Impairment	Years Impaired
				R1	R2	VA					
PREC17 Punta Miquillo to Punta La Bandera	8.41	SB	NS MAC-009, SEG17-01 RW-1A	1	1	5		L	Onsite Wastewater Systems Urban Runoff/Storm Sewers	Copper	2020
										Mercury	2020
										Temperature	2020
										Turbidity	2018, 2016
PREC18 Punta La Bandera to Cabezas de San Juan	10.46	SB	NS MAC-010 SBZ-030 RW-2	1	1	5		L	Unknown Source	Copper	2020
										Thallium	2020
										pH	2018
										Temperature	2020
										Turbidity	2020, 2018, 2016, 2014, 2012
PREC19 Cabezas de San Juan to Punta Barrancas	7.08	SB	NS MAC-078	5	5	5		L	Marinas and Recreational Boating Onsite Wastewater Systems Unknown Source Urban Runoff/Storm Sewers	Copper	2020, 2018
										Enterococci	2020, 2018, 2016
										Oil & Grease	2014
										Temperature	2020
										Turbidity	2020, 2018, 2016, 2014
PREC20 Punta Barrancas to Punta Medio Mundo	5.33	SB	NS SEG20-01 SEG20-02	5	5	5		L	Marinas and Recreational Boating Onsite Wastewater Systems Urban Runoff/Storm Sewers	Copper	2020
										Thallium	2020
										Dissolved Oxygen	2018, 2016
										Enterococci	2020, 2018
										Temperature	2020
										Turbidity	2020, 2018, 2016
PREC23	8.33	SB	NS SEG23-01	1	1	5		L	Major Industrial Point Sources	Copper	2020

2020 Cycle 303(d) List – List of Coastal Shoreline

Note: The 2020 303(d) List is comprised of the causes of impairments included in assessment cycles 2020, 2018, 2016, 2014, 2012, 2010 and 2008.

Assessment Unit ID (AU)	Size of AU (miles)	Class	2020 Monitoring Stations NS = Network ED = External Data	Designated Uses and Categories Summary			Notes	Priority	Potential Pollution Sources	Causes of Impairment	Years Impaired
				R1	R2	VA					
Isla Cabras to Punta Cascajo									Marinas and Recreational Boating	Turbidity	2020, 2016
PREC24 Punta Cascajo to Punta Lima	9.07	SB	NS SEG24-02	5	5	5		L	Major Industrial Point Sources Upstream Impoundment	Copper	2020
										Dissolved Oxygen	2018, 2016
										Enterococci	2020, 2018
										Temperature	2020
										Turbidity	2020, 2018, 2016
PREC25 Punta Lima to Morro de Humacao	9.83	SB	NS MAC-080 MAC-081 SEG25-01 RW-4, RW-31	5	5	5		L	Major Municipal Point Sources Onsite Wastewater Systems Urban Runoff/Storm Sewers	Copper	2020, 2018
										Mercury	2020
										Temperature	2020
										Enterococci	2020, 2018
										Turbidity	2020, 2018, 2016, 2014, 2012
PREC26 Morro de Humacao to Punta Candelero	1.84	SB	NS SEG26-01	5	5	5		L	Onsite Wastewater Systems Urban Runoff/Storm Sewers	Copper	2020
										Enterococci	2020, 2018
										Temperature	2020
										Turbidity	2020, 2018, 2016
PREC27 Punta Candelero to Punta Guayanés	3.74	SB	NS SEG27-01	5	5	5		L	Onsite Wastewater Systems Urban Runoff/Storm Sewers	Arsenic	2020
										Copper	2020
										Thallium	2020
										Enterococci	2020, 2018, 2008
										Turbidity	2020, 2018, 2016
PREC28C Punta Guayanés to Punta Quebrada Honda	4.68	SB	NS MAC-012 SBZ-037	5	5	5		L	Major Industrial Point Sources Onsite Wastewater Systems	Arsenic	2020
										Mercury	2020
										Copper	2020, 2018
										Thallium	2020
										Enterococci	2020, 2018

2020 Cycle 303(d) List – List of Coastal Shoreline

Note: The 2020 303(d) List is comprised of the causes of impairments included in assessment cycles 2020, 2018, 2016, 2014, 2012, 2010 and 2008.

Assessment Unit ID (AU)	Size of AU (miles)	Class	2020 Monitoring Stations NS = Network ED = External Data	Designated Uses and Categories Summary			Notes	Priority	Potential Pollution Sources	Causes of Impairment	Years Impaired
				R1	R2	VA					
									Urban Runoff/Storm Sewers	Oil & Grease	2014
										Temperature	2020
										Turbidity	2020, 2018, 2016, 2014, 2012
PREC28B Punta Quebrada Honda to Punta Yeguas	0.74	SB	NS SBZ-038	5	5	5		L	Onsite Wastewater Systems Unknown Source	Copper	2020, 2018
										Thallium	2020
										Enterococci	2020, 2018
										Turbidity	2020, 2016
PREC29 Punta Yeguas to Punta Tuna	4.35	SB	NS SEG29-02 SEG29-01	5	5	5		L	Onsite Wastewater Systems Unknown Source Urban Runoff/Storm Sewers	Copper	2020, 2018
										Enterococci	2020, 2018
										Lead	2018
										Thallium	2020
										pH	2018
										Turbidity	2020, 2018, 2016
PREC30 Punta Tuna to Cabo Mala Pascua	2.65	SB	NS MAC-082	5	5	5		L	Unknown Source	Copper	2020, 2018
										Enterococci	2020, 2018, 2016
										Turbidity	2020, 2018, 2016, 2014, 2012
PRSC31 Cabo Mala Pascua to Punta Viento	4.06	SB	NS SEG31-01	5	5	5		L	Onsite Wastewater Systems Upstream Impoundment Urban Runoff/Storm Sewers	Copper	2018
										Thallium	2020
										Turbidity	2020
										Temperature	2020
PRSC32 Punta Viento to Punta Figuras	6.16	SB	NS MAC-083 SBZ-040 RW-6 RW-7	5	5	5		L	Onsite Wastewater Systems Upstream Impoundment Urban	Copper	2020, 2018
										Mercury	2020
										Thallium	2020
										Dissolved Oxygen	2018, 2016
										Enterococci	2020, 2018, 2014, 2010

2020 Cycle 303(d) List – List of Coastal Shoreline

Note: The 2020 303(d) List is comprised of the causes of impairments included in assessment cycles 2020, 2018, 2016, 2014, 2012, 2010 and 2008.

Assessment Unit ID (AU)	Size of AU (miles)	Class	2020 Monitoring Stations NS = Network ED = External Data	Designated Uses and Categories Summary			Notes	Priority	Potential Pollution Sources	Causes of Impairment	Years Impaired
				R1	R2	VA					
									Runoff/Storm Sewers	Temperature	2020
										Turbidity	2020, 2018, 2016, 2014
PRSC33 Punta Figuras to Punta Ola Grande	8.10	SB	NS MAC-017 SEG33-01	5	5	5		L	Major Industrial Point Sources Onsite Wastewater Systems Urban Runoff/Storm Sewers	Copper	2020, 2018
										Lead	2020
										Mercury	2020
										Enterococci	2020, 2018
										Temperature	2020
										Turbidity	2020, 2018, 2016, 2014, 2012, 2008
PRSC34 Punta Ola Grande to Punta Petrona	40.9	SB	NS MAC-019 SEG34-01 SEG34-02 ED-Stations 09, 10, 19 and 20 from Natural Reserve of Jobos Bay	5	5	5	M	L	Agriculture Major Industrial Point Sources Onsite Wastewater Systems Upstream Impoundment Urban Runoff/Storms sewers	Copper	2020, 2018
										Lead	2020
										Mercury	2020
										Nickel	2020
										Dissolved Oxygen	2018, 2016, 2014, 2012, 2010
										Enterococci	2020, 2018, 2012, 2010
										Oil & Grease	2014
										pH	2020,2018, 2016, 2014, 2012, 2010
										Temperature	2020, 2016, 2014
										Turbidity	2020, 2018, 2016, 2014, 2012, 2010
PRSC35 Punta Petrona to Punta Cabullones	16.19	SB	NS MAC-020 SEG35-01 SEG35-02 ED -CariCoos Buoy A	5	5	5	M	L	Major Municipal Point Sources Onsite Wastewater Systems Upstream Impoundment Urban Runoff/Storm Sewers	Copper	2020, 2018
										Lead	2020
										Nickel	2020
										Thallium	2020
										Zinc	2020
										Enterococci	2020, 2018, 2016
										Mercury	2020, 2018
										Turbidity	2020, 2018, 2016, 2014

2020 Cycle 303(d) List – List of Coastal Shoreline

Note: The 2020 303(d) List is comprised of the causes of impairments included in assessment cycles 2020, 2018, 2016, 2014, 2012, 2010 and 2008.

Assessment Unit ID (AU)	Size of AU (miles)	Class	2020 Monitoring Stations NS = Network ED = External Data	Designated Uses and Categories Summary			Notes	Priority	Potential Pollution Sources	Causes of Impairment	Years Impaired
				R1	R2	VA					
PRSC36B Punta Cabullones to Punta Carenero	2.53	SB	NS SEG36B-01	1	1	5		L	Major Municipal Point Sources Marinas and Recreational Boating Onsite Wastewater Systems Urban Runoff/Storm Sewers	pH	2020
										Temperature	2020
										Copper	2020, 2018
										Mercury	2018
										Turbidity	2020, 2018, 2016
PRSC36C Punta Carenero to Punta Cuchara	6.70	SB	NS MAC-022 MAC-023	5	5	5		L	Major Municipal Point Sources Marinas and Recreational Boating Onsite Wastewater Systems Urban Runoff/Storm Sewers	Turbidity	2020
										Copper	2020, 2018
										Dissolved Oxygen	2012
										Enterococci	2020, 2018, 2014
										Mercury	2018
										Oil & Grease	2014
PRSC37B Punta Cuchara to Cayo Parguera	3.30	SB	NS MAC-084	5	5	5		L	Surface Mining Urban Runoff/Storm Sewers Upstream Impoundment Unknown Source	Turbidity	2020, 2018, 2016, 2014
										pH	2020
										Copper	2020, 2018
										Nickel	2020
										Enterococci	2020, 2018
										Mercury	2020, 2018
PRSC37C Cayo Parguera to Punta Guayanilla	4.20	SB	NS MAC-24 MAC-25	5	5	5		L	Major Municipal Point Sources Major Industrial Point Sources Surface Mining	Turbidity	2020, 2018, 2016, 2014
										Copper	2020, 2018
										Mercury	2020
										Enterococci	2020, 2018
										Lead	2018
										Nickel	2018

2020 Cycle 303(d) List – List of Coastal Shoreline Note: The 2020 303(d) List is comprised of the causes of impairments included in assessment cycles 2020, 2018, 2016, 2014, 2012, 2010 and 2008.											
Assessment Unit ID (AU)	Size of AU (miles)	Class	2020 Monitoring Stations NS = Network ED = External Data	Designated Uses and Categories Summary			Notes	Priority	Potential Pollution Sources	Causes of Impairment	Years Impaired
				R1	R2	VA					
									Onsite Wastewater Systems Upstream Impoundment Marinas and Recreational Boating Urban Runoff/Storm Sewers	Thallium	2020
										Oil & Grease	2014
										Zinc	2018
PRSC38 Punta Guayanilla to Punta Verraco	13.20	SB	NS MAC-027 MAC-028 MAC-089	5	5	5		L	Major Municipal Point Sources Marinas and Recreational Boating Onsite Wastewater Systems Upstream Impoundment Urban Runoff/Storm Sewers	Copper	2020, 2018
										Mercury	2020
										Thallium	2020
										Enterococci	2020, 2018
										Oil & Grease	2014
										Turbidity	2020
										Temperature	2020, 2018, 2016, 2014
PRSC39 Punta Verraco to Punta Ballena	6.41	SB	NS MAC-030, Seg39-01, G1	1	1	5		L	Unknown Source	Turbidity	2020, 2018, 2016, 2014, 2012
										Copper	2020
										Thallium	2020
PRSC40 Punta Ballena to Punta Brea	13.26	SB	NS MAC-034 MAC-085 RW-9	1	1	5		L	Marinas and Recreational Boating Minor Municipal Point Sources	Turbidity	2020, 2012
										Copper	2020
										Nickel	2020, 2018
										pH	2020, 2018, 2016, 2012

2020 Cycle 303(d) List – List of Coastal Shoreline

Note: The 2020 303(d) List is comprised of the causes of impairments included in assessment cycles 2020, 2018, 2016, 2014, 2012, 2010 and 2008.

Assessment Unit ID (AU)	Size of AU (miles)	Class	2020 Monitoring Stations NS = Network ED = External Data	Designated Uses and Categories Summary			Notes	Priority	Potential Pollution Sources	Causes of Impairment	Years Impaired
				R1	R2	VA					
									Onsite Wastewater Systems Urban Runoff/Storm Sewers	Temperature	2020, 2018, 2012
PRSC41B1 Punta Brea to Bahía Fosforescente La Parguera	10.93	SB	NS SBZ-045 SEG41B1-01 RW-10	1	1	5		L	Marinas and Recreational Boating Onsite Wastewater Systems Urban Runoff/Storm Sewers	Turbidity	2020, 2018, 2016, 2014, 2012
										Copper	2020
										Thallium	2020
										Temperature	2020
										pH	2020
PRSC41B2 Bahía Fosforescente La Parguera to Punta Cueva de Ayala	7.00	SB	NS SBZ-046 Seg41B2-01, RW-33 ED - Station MGIP4 from NOAA, & CariCoos	1	1	5	M	L	Landfill Marinas and Recreational Boating Onsite Wastewater Systems Urban Runoff/Storm Sewers	Copper	2020, 2018
										Thallium	2020
										Dissolved Oxygen	2020, 2016
										pH	2020, 2018
										Temperature	2020
										Turbidity	2020, 2016
PRSC41B3 Bahía Monsio José to Faro de Cabo Rojo	13.45	SB	NS SEG41B3-01 SEG41B3-02	5	5	5		L	Unknown Source	Turbidity	2020, 2018, 2016
										Mercury	2020
										Thallium	2020
										Nickel	2020
										Dissolved Oxygen	2020, 2016
										Enterococci	2020, 2018
										Temperature	2020
PRWC42	2.89	SB	NS	1	1	5		L	Unknown Source	Turbidity	2020, 2018, 2016

2020 Cycle 303(d) List – List of Coastal Shoreline

Note: The 2020 303(d) List is comprised of the causes of impairments included in assessment cycles 2020, 2018, 2016, 2014, 2012, 2010 and 2008.

Assessment Unit ID (AU)	Size of AU (miles)	Class	2020 Monitoring Stations NS = Network ED = External Data	Designated Uses and Categories Summary			Notes	Priority	Potential Pollution Sources	Causes of Impairment	Years Impaired
				R1	R2	VA					
Faro de Cabo Rojo to Punta Águila			SEG42-01							Dissolved Oxygen	2020, 2018, 2016
										pH	2018
										Temperature	2020, 2018
PRWC43 Punta Águila to Punta Guaniquilla	9.54	SB	NS MAC-037, SBZ-047 SBZ-048 RW-12A, RW-12B, RW-13, RW-14A	1	1	5		L	Collection System Failure Marinas and Recreational Boating Minor Municipal Point Sources Onsite Wastewater Systems	Turbidity	2020,2018, 2016
										Temperature	2020
PRWC44 Punta Guaniquilla to Punta La Mela	2.50	SB	NS SBZ-050 SBZ-051, RW-8	1	1	5		L	Onsite Wastewater Systems	Turbidity	2020, 2018, 2016
										Thallium	2020
										pH	2020
PRWC45 Punta La Mela to Punta Carenero	2.95	SB	NS SEG45-01	5	5	5		L	Collection System Failure Marinas and Recreational Boating Onsite Wastewater Systems	Turbidity	2020, 2018, 2016
										Copper	2020, 2018
										Thallium	2020
										Lead	2020
										Enterococci	2020, 2018, 2016
PRWC46 Punta Carenero to front of Cayo Ratones	4.00	SB	NS SBZ-052	5	5	5		L	Collection System Failure Marinas and Recreational Boating Onsite Wastewater Systems Urban Runoff/Storm Sewers	Turbidity	2020, 2018, 2016
										Copper	2020
										Lead	2020
										Thallium	2020
										Enterococci	2018
										Temperature	2020

2020 Cycle 303(d) List – List of Coastal Shoreline

Note: The 2020 303(d) List is comprised of the causes of impairments included in assessment cycles 2020, 2018, 2016, 2014, 2012, 2010 and 2008.

Assessment Unit ID (AU)	Size of AU (miles)	Class	2020 Monitoring Stations NS = Network ED = External Data	Designated Uses and Categories Summary			Notes	Priority	Potential Pollution Sources	Causes of Impairment	Years Impaired
				R1	R2	VA					
PRWC47 In front of Cayo Ratones to Punta Guanajibo	3.85	SB	NS SEG47-01	1	1	5		L	Onsite Wastewater Systems	Turbidity	2020,2018
										Copper	2020
										Nickel	2020
PRWC48 Punta Guanajibo to Punta Algarrobo	5.60	SB	NS MAC-038 MAC-040	5	5	5		L	Onsite Wastewater Systems Upstream Impoundment Urban Runoff/Storm Sewers	Turbidity	2020
										Copper	2020, 2018
										Lead	2020
										Mercury	2020
										Thallium	2020
										Dissolved Oxygen	2012
										Enterococci	2020, 2018, 2016, 2014, 2010
										Nickel	2020, 2018
										Oil & Grease	2014
										pH	2018
PRWC49 Punta Algarrobo to Punta Cadena	6.98	SB	NS MAC-041 SEG49-01 RW-15	5	5	5		L	Major Municipal Point Sources Upstream Impoundment Urban Runoff/Storm Sewers Onsite Wastewater Systems	Turbidity	2020, 2018, 2016, 2014
										Copper	2020, 2018
										Nickel	2020
										Enterococci	2020, 2018
										pH	2018, 2012
										Temperature	2020
PRWC50 Punta Cadena to Punta Higüero	4.98	SB	NS SBZ-054 SBZ-055 RW-5	5	5	5		L	Onsite Wastewater Systems Unknown Sources Upstream Impoundment	Turbidity	2020, 2018, 2016
										Copper	2020, 2018
										Enterococci	2018
										Lead	2018
										Nickel	2020, 2018
										Mercury	2020

2020 Cycle 303(d) List – List of Coastal Shoreline
Note: The 2020 303(d) List is comprised of the causes of impairments included in assessment cycles 2020, 2018, 2016, 2014, 2012, 2010 and 2008.

Assessment Unit ID (AU)	Size of AU (miles)	Class	2020 Monitoring Stations NS = Network ED = External Data	Designated Uses and Categories Summary			Notes	Priority	Potential Pollution Sources	Causes of Impairment	Years Impaired
				R1	R2	VA					
PRWC51 Punta Higüero to Punta del Boquerón	6.14	SB	NS SEG51-01 SEG51-02 RW-22	5	5	5		L	Onsite Wastewater Systems Unknown Source	Turbidity	2020, 2018, 2016
										Copper	2020, 2018
										Lead	2020
										Mercury	2020
										Enterococci	2020, 2018
										Nickel	2020, 2018
PRWC52 Punta del Boquerón to Punta Borinquén	6.80	SB	NS MAC-043 SBZ-002, SBZ-003, SBZ-004 RW-16, RW-16A	1	1	5		L	Major Municipal Point Sources Onsite Wastewater Systems Urban Runoff/Storm Sewers	Turbidity	2020, 2016, 2018
										Copper	2020
PRCC53 Culebra Island	32.70	SB	NS RW-3	2	2	5		L	Onsite Wastewater Systems Marinas and Recreational Boating Debris and Bottom Deposits Hazardous Waste	Turbidity	2020, 2010
										pH	2018

Notes:

H - If the Monitoring Station column is left blank, the Assessment Unit was not monitored for 2020 cycle.
M - External data
R1 - Primary Contact Recreation
R2 - Secondary Contact Recreation
AL – Aquatic Life
Priority: L: Low Priority: basins that were not including in the Puerto Rico Unified Watershed Assessment and Restoration Activities (PRUWARA) and have less than 50% of its waters as impaired for some designated use.

Attachment U: Endangered and Threatened Species and Critical Habitats under the Jurisdiction of the NOAA Fisheries Service

Endangered and Threatened Species and Critical Habitats under the Jurisdiction of the NOAA Fisheries Service

Puerto Rico

Listed Species	Scientific Name	Status	Date Listed
Marine Mammals			
blue whale	*Balaenoptera musculus*	Endangered	12/02/70
finback whale	*Balaenoptera physalus*	Endangered	12/02/70
humpback whale	*Megaptera novaeangliae*	Endangered	12/02/70
sei whale	*Balaenoptera borealis*	Endangered	12/02/70
sperm whale	*Physeter macrocephalus*	Endangered	12/02/70
Turtles			
green sea turtle	*Chelonia mydas*	Threatened[1]	07/28/78
hawksbill sea turtle	*Eretmochelys imbricata*	Endangered	06/02/70
Kemp's ridley sea turtle	*Lepidochelys kempii*	Endangered	12/02/70
leatherback sea turtle	*Dermochelys coriacea*	Endangered	06/02/70
loggerhead sea turtle	*Caretta caretta*	Threatened	07/28/78
Invertebrates			
elkhorn coral	*Acropora palmata*	Threatened	5/9/06
staghorn coral	*Acropora cervicornis*	Threatened	5/9/06

Designated Critical Habitat

Green sea turtle: The waters extending seaward 3 nautical miles (5.6 km) from the mean high water line of Culebra Island, Puerto Rico.

Hawksbill sea turtle: The waters extending seaward 3 nautical miles (5.6 km) from the mean high water line of Mona and Monito Islands, Puerto Rico

Elkhorn and Staghorn Corals: All waters in the depths of 98 ft (30 m) and shallower to the mean low water line in Puerto Rico and associated Islands. Within these specific areas, the essential feature consists of natural consolidated hard substrate or dead coral skeleton that are free from fleshy or turf macroalgae cover and sediment cover. Maps and details regarding coral critical habitat can be found at: http://sero.nmfs.noaa.gov/pr/esa/acropora.htm

Species Proposed for Listing

None

Proposed Critical Habitat

None

---

[1] Green turtles are listed as threatened, except for breeding populations of green turtles in Florida and on the Pacific Coast of Mexico, which are listed as endangered